5–22–98
Vol. 63 No. 99
Pages 28217–28474

federal register

Friday
May 22, 1998

Briefings on how to use the Federal Register
For information on briefings in Washington, DC, and Chicago, IL, see announcement on the inside cover of this issue.

Now Available Online via
GPO Access

Free online access to the official editions of the *Federal Register, the Code of Federal Regulations* and other Federal Register publications is available on *GPO Access*, a service of the U.S. Government Printing Office at:

http://www.access.gpo.gov/nara/index.html

For additional information on ***GPO Access*** products, services and access methods, see page II or contact the *GPO Access* User Support Team via:

★ Phone: toll-free: 1-888-293-6498

★ Email: gpoaccess@gpo.gov

The **FEDERAL REGISTER** is published daily, Monday through Friday, except official holidays, by the Office of the Federal Register, National Archives and Records Administration, Washington, DC 20408, under the Federal Register Act (44 U.S.C. Ch. 15) and the regulations of the Administrative Committee of the Federal Register (1 CFR Ch. I). The Superintendent of Documents, U.S. Government Printing Office, Washington, DC 20402 is the exclusive distributor of the official edition.

The **Federal Register** provides a uniform system for making available to the public regulations and legal notices issued by Federal agencies. These include Presidential proclamations and Executive Orders, Federal agency documents having general applicability and legal effect, documents required to be published by act of Congress, and other Federal agency documents of public interest.

Documents are on file for public inspection in the Office of the Federal Register the day before they are published, unless the issuing agency requests earlier filing. For a list of documents currently on file for public inspection, see http://www.nara.gov/fedreg.

The seal of the National Archives and Records Administration authenticates the Federal Register as the official serial publication established under the Federal Register Act. Under 44 U.S.C. 1507, the contents of the **Federal Register** shall be judicially noticed.

The **Federal Register** is published in paper and on 24x microfiche. It is also available online at no charge as one of the databases on GPO Access, a service of the U.S. Government Printing Office.

The online edition of the **Federal Register** is issued under the authority of the Administrative Committee of the Federal Register as the official legal equivalent of the paper and microfiche editions (44 U.S.C. 4101 and 1 CFR 5.10). It is updated by 6 a.m. each day the **Federal Register** is published and it includes both text and graphics from Volume 59, Number 1 (January 2, 1994) forward.

GPO Access users can choose to retrieve online **Federal Register** documents as TEXT (ASCII text, graphics omitted), PDF (Adobe Portable Document Format, including full text and all graphics), or SUMMARY (abbreviated text) files. Users should carefully check retrieved material to ensure that documents were properly downloaded.

On the World Wide Web, connect to the **Federal Register** at http://www.access.gpo.gov/nara. Those without World Wide Web access can also connect with a local WAIS client, by Telnet to swais.access.gpo.gov, or by dialing (202) 512-1661 with a computer and modem. When using Telnet or modem, type swais, then log in as guest with no password.

For more information about GPO Access, contact the GPO Access User Support Team by E-mail at gpoaccess@gpo.gov; by fax at (202) 512–1262; or call (202) 512–1530 or 1–888–293–6498 (toll free) between 7 a.m. and 5 p.m. Eastern time, Monday–Friday, except Federal holidays.

The annual subscription price for the **Federal Register** paper edition is $555, or $607 for a combined **Federal Register,** Federal Register Index and List of CFR Sections Affected (LSA) subscription; the microfiche edition of the **Federal Register** including the Federal Register Index and LSA is $220. Six month subscriptions are available for one-half the annual rate. The charge for individual copies in paper form is $8.00 for each issue, or $8.00 for each group of pages as actually bound; or $1.50 for each issue in microfiche form. All prices include regular domestic postage and handling. International customers please add 25% for foreign handling. Remit check or money order, made payable to the Superintendent of Documents, or charge to your GPO Deposit Account, VISA, MasterCard or Discover. Mail to: New Orders, Superintendent of Documents, P.O. Box 371954, Pittsburgh, PA 15250–7954.

There are no restrictions on the republication of material appearing in the **Federal Register.**

How To Cite This Publication: Use the volume number and the page number. Example: 63 FR 12345.

SUBSCRIPTIONS AND COPIES

PUBLIC	
Subscriptions:	
Paper or fiche	**202–512–1800**
Assistance with public subscriptions	**512–1806**
General online information	**202–512–1530; 1–888–293–6498**
Single copies/back copies:	
Paper or fiche	**512–1800**
Assistance with public single copies	**512–1803**
FEDERAL AGENCIES	
Subscriptions:	
Paper or fiche	**523–5243**
Assistance with Federal agency subscriptions	**523–5243**

FEDERAL REGISTER WORKSHOP

THE FEDERAL REGISTER: WHAT IT IS AND HOW TO USE IT

FOR: Any person who uses the Federal Register and Code of Federal Regulations.

WHO: Sponsored by the Office of the Federal Register.

WHAT: Free public briefings (approximately 3 hours) to present:

1. The regulatory process, with a focus on the Federal Register system and the public's role in the development regulations.
2. The relationship between the Federal Register and Code of Federal Regulations.
3. The important elements of typical Federal Register documents.
4. An introduction to the finding aids of the FR/CFR system.

WHY: To provide the public with access to information necessary to research Federal agency regulations which directly affect them. There will be no discussion of specific agency regulations.

WASHINGTON, DC

WHEN: June 16, 1998 at 9:00 am.

WHERE: Office of the Federal Register
Conference Room
800 North Capitol Street, NW.
Washington, DC
(3 blocks north of Union Station Metro)

RESERVATIONS: 202–523–4538

CHICAGO, IL

WHEN: June 23, 1998 from 9:00 am to Noon

WHERE: Ralph H. Metcalfe Federal Building
Conference Room 328
77 W. Jackson
Chicago, IL
Federal Information Center

RESERVATIONS: 1–800–688–9889 x0

Printed on recycled paper containing 100% post consumer waste

Contents

Federal Register

Vol. 63, No. 99

Friday, May 22, 1998

Agency for International Development
NOTICES
Meetings:
Voluntary Foreign Aid Advisory Committee, 28411–28412

Agricultural Marketing Service
PROPOSED RULES
Fluid milk promotion order, 28292–28294

Agricultural Research Service
NOTICES
Agency information collection activities:
Proposed collection; comment request, 28347

Agriculture Department
See Agricultural Marketing Service
See Agricultural Research Service
See Animal and Plant Health Inspection Service
See Forest Service
See Natural Resources Conservation Service
PROPOSED RULES
Grants and cooperative agreements to State and local governments, universities, hospitals, and other non-profit organizations; uniform administrative requirements, 28294
NOTICES
Agency information collection activities:
Submission for OMB review; comment request, 28345–28347

Air Force Department
NOTICES
Commercial activities performance (OMB A-76); cost comparison studies, 28371–28374
Meetings:
Community College Board of Visitors, 28374

Animal and Plant Health Inspection Service
NOTICES
Agency information collection activities:
Proposed collection; comment request, 28347–28348

Appalachian States Low-Level Radioactive Waste Commission
NOTICES
Meetings, 28350

Army Department
See Engineers Corps
NOTICES
Environmental statements; availability, etc.:
Base realignment and closure—
Fort Meade, MD; Defense Investigative Service relocation, 28374
Fort Ritchie, MD, 28374–28375

Arts and Humanities, National Foundation
See National Foundation on the Arts and the Humanities

Blind or Severely Disabled, Committee for Purchase From People Who Are
See Committee for Purchase From People Who Are Blind or Severely Disabled

Civil Rights Commission
NOTICES
Meetings; State advisory committees:
District of Columbia, 28353
Massachusetts, 28353
Ohio, 28353
Pennsylvania, 28353

Commerce Department
See International Trade Administration
See National Oceanic and Atmospheric Administration
See National Telecommunications and Information Administration
NOTICES
Agency information collection activities:
Proposed collection; comment request, 28353–28354
Submission for OMB review; comment request, 28354–28355

Committee for Purchase From People Who Are Blind or Severely Disabled
NOTICES
Procurement list; additions and deletions, 28350–28352
Procurement list; additions and deletions; correction, 28352–28353

Committee for the Implementation of Textile Agreements
NOTICES
Export visa requirements; certification, waivers, etc.:
Turkey, 28362–28363

Commodity Futures Trading Commission
NOTICES
Contract market proposals:
Chicago Board of Trade—
Corn and soybeans; correction, 28363
Meetings; Sunshine Act, 28369–28370

Customs Service
NOTICES
Agency information collection activities:
Proposed collection; comment request, 28448–28450
Meetings:
Vessels and aircraft servicing offshore operations; entrance and clearance procedures, 28450–28451

Defense Department
See Air Force Department
See Army Department
See Engineers Corps
See Navy Department
RULES
Acquisition regulations:
Domestic source restrictions waiver, 28284–28285

NOTICES
Meetings:
Historical Records Declassification Advisory Committee, 28370–28371
Military Justice Joint Service Committee, 28371

Education Department
NOTICES
Agency information collection activities:
Submission for OMB review; comment request, 28377–28378

Employment and Training Administration
NOTICES
Adjustment assistance:
Eagle-Picher Plastics Division, 28412–28413
Henry I. Siegel Co., Inc., 28413
Imperial Home Decor Group et al., 28413–28414
Michigan Carton Co., 28414
Premier Auto Glass et al., 28414–28415
Texas Instruments, Inc., 28415
Adjustment assistance and NAFTA transitional adjustment assistance:
Badger Paper Mills, Inc., 28412

Energy Department
See Energy Efficiency and Renewable Energy Office
See Federal Energy Regulatory Commission
NOTICES
Agency information collection activities:
Submission for OMB review; comment request, 28378

Energy Efficiency and Renewable Energy Office
NOTICES
Grants and cooperative agreements; availability, etc.:
State energy program special projects, 28378–28379

Engineers Corps
NOTICES
Environmental statements; availability, etc.:
Beaufort Sea Oil and Gas Development/Northstar Project, AK, 28375–28376

Environmental Protection Agency
RULES
Air programs:
Stratospheric ozone protection—
Ozone-depleting substances; substitutes list, 28251–28253
Pesticides; tolerances in food, animal feeds, and raw agricultural commodities:
Bacillus thuringiensis subspecies tolworthi Cry9C protein and genetic material necessary for production in corn, 28258–28261
Hydroxyethylidine diphosphonic acid, 28253–28258
PROPOSED RULES
Air pollution control; new motor vehicles and engines:
New nonroad compression-ignition engines at or above 37 kilowatts—
Propulsion and auxiliary marine engines, 28309–28317
Superfund program:
National oil and hazardous substances contingency plan—
National priorities list update, 28317–28322
NOTICES
Agency information collection activities:
Submission for OMB review; comment request, 28380–28381
Environmental statements; availability, etc.:
Agency statements—
Comment availability, 28381–28382
Weekly receipts, 28381
Hazardous waste:
Land disposal restrictions; exemptions—
Great Lakes Chemical Corp., 28382–28383
Meetings:
Drinking water issues—
Water conservation plan guidelines; conference call, 28383
Local Government Advisory Committee, 28383

Export-Import Bank
NOTICES
Meetings:
Sub-Saharan Africa Advisory Committee, 28383–28384

Federal Aviation Administration
RULES
Airworthiness directives:
McDonnell Douglas, 28217–28218
Raytheon, 28218–28220
Standard instrument approach procedures, 28224–28225
PROPOSED RULES
Airworthiness directives:
New Piper Aircraft, Inc., 28294–28299
SOCATA-Groupe AEROSPATIALE, 28299–28301
NOTICES
Passenger facility charges; applications, etc.:
Phoenix Sky Harbor International Airport, AZ, 28440–28441
Tri-State Airport, WV, 28441–28442

Federal Communications Commission
PROPOSED RULES
Common carrier services:
Telecommunications Act of 1996; implementation—
Telecommunications services, equipment, and customer premises equipment; access by persons with disabilities, 28456–28473
Universal service support; forward-looking economic cost mechanism, 28339–28343

Federal Emergency Management Agency
RULES
Flood elevation determinations:
Alabama et al., 28280–28284
Alaska et al., 28273–28280
Arizona et al., 28261–28273
Connecticut et al., 28265–28267
Illinois, 28267–28268
PROPOSED RULES
Flood elevation determinations:
Alabama et al., 28331–28339
Arizona et al., 28322–28331
NOTICES
Disaster and emergency areas:
Georgia, 28384
Kentucky, 28384
Tennessee, 28384–28385

Federal Energy Regulatory Commission
NOTICES
Applications, hearings, determinations, etc.:
Cobisa-Person L.P., 28379
Pacific Gas & Electric Co., 28379
Southern California Edison Co., 28379–28380

Federal Highway Administration
RULES
Motor carrier safety standards:
Technical corrections, 28286–28287

Federal Maritime Commission
NOTICES
Agreements filed, etc., 28385

Federal Railroad Administration
NOTICES
Meetings:
Amtrak Reform Council, 28442

Federal Reserve System
NOTICES
Banks and bank holding companies:
Change in bank control, 28385
Formations, acquisitions, and mergers, 28385–28386
Permissible nonbanking activities, 28386–28387
Meetings; Sunshine Act, 28387

Fish and Wildlife Service
PROPOSED RULES
Endangered and threatened species:
San Xavier talussnail, 28343
Migratory bird hunting:
Baiting and baited areas, 28343–28344
NOTICES
Pipeline right-of-way applications:
Mississippi et al., 28406–28407

Food and Drug Administration
PROPOSED RULES
Human drugs and biological products:
In vivo radiopharmaceuticals used for diagnosis and monitoring; evaluation and approval, 28301–28309
NOTICES
Human drugs:
Drug products discontinued from sale for reasons other than safety or effectiveness—
Cimetidine 100 mg tablets, 28387–28388
Medical devices:
Third party review under FDA Modernization Act of 1997; emergency processing request under OMB review, 28388–28391
Reporting and recordkeeping requirements, 28391
Reports and guidance documents; availability, etc.:
Medical devices; general/specific intended use; industry guidance, 28392
Third party programs implementation under FDA Modernization Act of 1997; guidance for staff, industry, and third parties, 28392–28393

Forest Service
NOTICES
Environmental statements; notice of intent:
Payette National Forest, ID, 28348–28349
Meetings:
Southwest Oregon Provincial Interagency Executive Committee Advisory Committee, 28349

Health and Human Services Department
See Food and Drug Administration
See Health Care Financing Administration

Health Care Financing Administration
NOTICES
Agency information collection activities:
Proposed collection; comment request, 28394
Submission for OMB review; comment request, 28394–28396
Privacy Act:
Systems of records, 28396–28398

Housing and Urban Development Department
NOTICES
Grants and cooperative agreements; availability, etc.:
Facilities to assist homeless—
Excess and surplus Federal property, 28398–28406

Interior Department
See Fish and Wildlife Service
See Land Management Bureau
See Minerals Management Service
NOTICES
Environmental statements; availability, etc.:
Central Utah Project—
Provo River Restoration Project, 28406

International Development Cooperation Agency
See Agency for International Development

International Trade Administration
NOTICES
Antidumping:
Brake rotors from—
China, 28355
Ferrosilicon from—
Brazil, 28355–28357
Small diameter circular seamless carbon and alloy steel standard, line and pressure pipe from—
Brazil, 28357–28359

Justice Department
See National Institute of Justice

Labor Department
See Employment and Training Administration
See Pension and Welfare Benefits Administration

Land Management Bureau
NOTICES
Closure of public lands:
Oregon, 28407–28408
Management framework plans, etc.:
Alaska, 28408
Meetings:
Resource advisory councils—
Southeast Oregon, 28408
Oil and gas leases:
Wyoming, 28409
Realty actions; sales, leases, etc.:
Nevada, 28409–28410
Resource management plans, etc.:
Las Vegas Resource Area, NV, 28410
Survey plat filings:
Colorado, 28410–28411
Idaho, 28411

Minerals Management Service
RULES
Royalty management and Outer Continental Shelf; oil, gas, and sulphur operations:
Gas royalties reporting and payment standards and gas analysis reports; and oil and gas production measurement, surface commingling, and security
Correction, 28453

National Aeronautics and Space Administration
RULES
Acquisition regulations:
Technical performance incentive guidance, 28285–28286

National Bipartisan Commission on Future of Medicare
NOTICES
Meetings, 28415–28416

National Council on Disability
NOTICES
Committees; establishment, renewal, termination, etc.:
International Watch and Technology Watch Advisory Committees, 28416

National Foundation on the Arts and the Humanities
NOTICES
Meetings; Sunshine Act, 28416

National Institute of Justice
NOTICES
Meetings:
Future of DNA Evidence National Commission, 28412

National Oceanic and Atmospheric Administration
NOTICES
Endangered and threatened species:
Recovery plans—
Sea turtles, 28359
Meetings:
North Pacific Fishery Management Council, 28359–28360
Permits:
Marine mammals, 28360–28361

National Telecommunications and Information Administration
NOTICES
Meetings:
Public Interest Obligations of Digital Television Broadcasters Advisory Committee, 28361–28362

National Transportation Safety Board
NOTICES
Agency information collection activities:
Submission for OMB review; comment request, 28416–28417

Natural Resources Conservation Service
NOTICES
Environmental statements; availability, etc.:
New York City Watershed, NY, 28349
Meetings:
Agricultural Air Quality Task Force, 28349–28350

Navy Department
NOTICES
Environmental statements; availability, etc.:
Patuxent River Complex, MD; increased flight and related operations, 28376–28377

Nuclear Regulatory Commission
NOTICES
Meetings:
Reactor Safeguards Advisory Committee, 28417–28418
Reactor Safeguards Advisory Committee; correction, 28453
Site decommissioning plans; sites:
U.S. Army Garrison, Fitzsimons, Aurora, CO; hearing, 28418

Nuclear Waste Technical Review Board
NOTICES
Meetings, 28418–28419

Pension and Welfare Benefits Administration
NOTICES
Employee benefit plans; prohibited transaction exemptions:
Metropolitan Life Insurance Co.; correction, 28415

President's Council on Sustainable Development
NOTICES
Meetings, 28419–28420

Public Health Service
See Food and Drug Administration

Railroad Retirement Board
NOTICES
Privacy Act:
Systems of records, 28420–28428

Securities and Exchange Commission
NOTICES
Agency information collection activities:
Proposed collection; comment request, 28428–28429
Submission for OMB review; comment request, 28429
Self-regulatory organizations; proposed rule changes:
Pacific Exchange, Inc., 28432–28433
Applications, hearings, determinations, etc.:
Armada Funds et al., 28429
General American Investors Co., Inc., 28431–28432

Small Business Administration
NOTICES
Disaster loan areas:
Alabama, 28433
Georgia, 28433–28434
Kentucky, 28434
Tennessee et al., 28434

Social Security Administration
NOTICES
Organization, functions, and authority delegations:
Inspector General Office, 28434–28436

State Department
NOTICES
Arms Export Control Act:
Determinations, 28436
Meetings:
Shipping Coordinating Committee, 28436

Surface Transportation Board
RULES
Rail licensing procedures:
Rail service continuation subsidy standards; CFR part removed, 28287–28291

NOTICES
Railroad operation, acquisition, construction, etc.:
Canadian National Railway Co. et al., 28442–28444
Union Pacific Corp. et al.; correction, 28444–28446
Railroad services abandonment:
Consolidated Rail Corp., 28446–28447
Paducah & Louisville Railway, Inc., 28447–28448

Tennessee Valley Authority
NOTICES
Agency information collection activities:
Proposed collection; comment request, 28436

Textile Agreements Implementation Committee
See Committee for the Implementation of Textile Agreements

Thrift Supervision Office
NOTICES
Applications, hearings, determinations, etc.:
Ben Franklin Bank of Illinois, 28451
Carnegie Savings Bank, 28451
Homestead Mutual Holding Co., 28452

Transportation Department
See Federal Aviation Administration
See Federal Highway Administration
See Federal Railroad Administration
See Surface Transportation Board
RULES
Aviation economic regulations:
Aviation charter rules, 28225–28251
NOTICES
Agency information collection activities:
Submission for OMB review; comment request, 28436–28438
Privacy Act:
Systems of records, 28438–28440

Treasury Department
See Customs Service
See Thrift Supervision Office
See United States Mint

United States Information Agency
NOTICES
Art objects; importation for exhibition:
Letters in Gold: Ottoman Calligraphy from the Sakip Sabanci Collection, Istanbul, 28452
Manet, Monet, and the Gare Saint-Lazare, 28452

United States Institute of Peace
NOTICES
Meetings; Sunshine Act, 28452

United States Mint
NOTICES
Meetings:
Dollar Coin Design Advisory Committee, 28451

Separate Parts In This Issue

Part II
Federal Communications Commission, 28456–28473

Reader Aids
Consult the Reader Aids section at the end of this issue for phone numbers, online resources, finding aids, reminders, and notice of recently enacted public laws.

CFR PARTS AFFECTED IN THIS ISSUE

A cumulative list of the parts affected this month can be found in the Reader Aids section at the end of this issue.

7 CFR

Proposed Rules:

1160 28292
3015 28294
3016 28294
3019 28294

14 CFR

39 (2 documents) 28217, 28218
97 (3 documents) 28220, 28222, 28224
207 28225
208 28225
212 28225
380 28225

Proposed Rules:

39 (2 documents) 28294, 28299

21 CFR

Proposed Rules:

315 28301
601 28301

30 CFR

202 28453
216 28453
250 28453

40 CFR

82 28251
180 (2 documents) 28253, 28258

Proposed Rules:

89 28309
300 28317

44 CFR

65 (4 documents) 28261, 28265, 28267, 28268
67 (2 documents) 28273, 28280

Proposed Rules:

67 (2 documents) 28223, 28331

47 CFR

Proposed Rules:

1 28456
54 28339

48 CFR

225 28284
252 28284
1816 28285

49 CFR

365 28286
372 28286
373 28286
374 28286
377 28286
1152 28287
1155 28287

50 CFR

Proposed Rules:

17 28343
20 28343

Rules and Regulations

Federal Register
Vol. 63, No. 99
Friday, May 22, 1998

This section of the FEDERAL REGISTER contains regulatory documents having general applicability and legal effect, most of which are keyed to and codified in the Code of Federal Regulations, which is published under 50 titles pursuant to 44 U.S.C. 1510.

The Code of Federal Regulations is sold by the Superintendent of Documents. Prices of new books are listed in the first FEDERAL REGISTER issue of each week.

DEPARTMENT OF TRANSPORTATION

Federal Aviation Administration

14 CFR Part 39

[Docket No. 97–NM–251–AD; Amendment 39–10537; AD 98–11–10]

RIN 2120–AA64

Airworthiness Directives; McDonnell Douglas Model DC–9 and DC–9–80 Series Airplanes, Model MD–88 Airplanes, and C–9 (Military) Series Airplanes

AGENCY: Federal Aviation Administration, DOT.

ACTION: Final rule.

SUMMARY: This amendment adopts a new airworthiness directive (AD), applicable to certain McDonnell Douglas Model DC–9 and DC–9–80 series airplanes, Model MD–88 airplanes, and C–9 (military) series airplanes, that requires an inspection to determine if the latching lever pin of the speed brake passes an axial force check, and a visual inspection to determine if the staking of the latching lever pin is acceptable; and follow-on corrective action, if necessary. This amendment is prompted by reports that the speed brake handle jammed in the ground spoiler position. The actions specified by this AD are intended to prevent a jammed speed brake handle pin, which could result in retraction of the spoilers and full advancement of the left throttle during a go-around.

DATES: Effective June 26, 1998.

The incorporation by reference of certain publications listed in the regulations is approved by the Director of the Federal Register as of June 26, 1998.

ADDRESSES: The service information referenced in this AD may be obtained from The Boeing Company, Douglas Products Division, 3855 Lakewood Boulevard, Long Beach, California 90846, Attention: Technical Publications Business Administration, Dept. C1–L51 (2–60). This information may be examined at the Federal Aviation Administration (FAA), Transport Airplane Directorate, Rules Docket, 1601 Lind Avenue, SW., Renton, Washington; or at the FAA, Transport Airplane Directorate, Los Angeles Aircraft Certification Office, 3960 Paramount Boulevard, Lakewood, California; or at the Office of the Federal Register, 800 North Capitol Street, NW., suite 700, Washington, DC.

FOR FURTHER INFORMATION CONTACT: Walter Eierman, Aerospace Engineer, Systems and Equipment Branch, ANM–130L, FAA, Los Angeles Aircraft Certification Office, 3960 Paramount Boulevard, Lakewood, California 90712; telephone (562) 627–5336; fax (562) 627–5210.

SUPPLEMENTARY INFORMATION: A proposal to amend part 39 of the Federal Aviation Regulations (14 CFR part 39) to include an airworthiness directive (AD) that is applicable to certain McDonnell Douglas Model DC–9 and DC–9–80 series airplanes, Model MD–88 airplanes, and C–9 (military) series airplanes was published in the **Federal Register** on February 19, 1998 (63 FR 8371). That action proposed to require an inspection to determine if the latching lever pin of the speed brake passes an axial force check, and a visual inspection to determine if the staking of the latching lever pin is acceptable; and follow-on corrective action, if necessary.

Comments

Interested persons have been afforded an opportunity to participate in the making of this amendment. Due consideration has been given to the single comment received.

The commenter supports the proposed rule.

Conclusion

After careful review of the available data, including the comment noted above, the FAA has determined that air safety and the public interest require the adoption of the rule as proposed.

Cost Impact

There are approximately 2,050 McDonnell Douglas Model DC–9 and DC–9–80 series airplanes, Model MD–88 airplanes, and C–9 (military) series airplanes of the affected design in the worldwide fleet. The FAA estimates that 1,250 airplanes of U.S. registry will be affected by this AD, that it will take approximately 5 work hours per airplane to accomplish the required actions, and that the average labor rate is $60 per work hour. Based on these figures, the cost impact of the AD on U.S. operators is estimated to be $375,000, or $300 per airplane.

The cost impact figure discussed above is based on assumptions that no operator has yet accomplished any of the requirements of this AD action, and that no operator would accomplish those actions in the future if this AD were not adopted.

Regulatory Impact

The regulations adopted herein will not have substantial direct effects on the States, on the relationship between the national government and the States, or on the distribution of power and responsibilities among the various levels of government. Therefore, in accordance with Executive Order 12612, it is determined that this final rule does not have sufficient federalism implications to warrant the preparation of a Federalism Assessment.

For the reasons discussed above, I certify that this action (1) is not a ''significant regulatory action'' under Executive Order 12866; (2) is not a ''significant rule'' under DOT Regulatory Policies and Procedures (44 FR 11034, February 26, 1979); and (3) will not have a significant economic impact, positive or negative, on a substantial number of small entities under the criteria of the Regulatory Flexibility Act. A final evaluation has been prepared for this action and it is contained in the Rules Docket. A copy of it may be obtained from the Rules Docket at the location provided under the caption **ADDRESSES.**

List of Subjects in 14 CFR Part 39

Air transportation, Aircraft, Aviation safety, Incorporation by reference, Safety.

Adoption of the Amendment

Accordingly, pursuant to the authority delegated to me by the Administrator, the Federal Aviation Administration amends part 39 of the Federal Aviation Regulations (14 CFR part 39) as follows:

PART 39—AIRWORTHINESS DIRECTIVES

1. The authority citation for part 39 continues to read as follows:

Authority: 49 U.S.C. 106(g), 40113, 44701.

§ 39.13 [Amended]

2. Section 39.13 is amended by adding the following new airworthiness directive:

98–11–10 McDonnell Douglas: Amendment 39–10537. Docket 97–NM–251–AD.

Applicability: Model DC–9–10, –20, –30, –40, and –50, and DC–9–81 (MD–81), DC–9–82 (MD–82), DC–9–83 (MD–83), and DC–9–87 (MD–87) series airplanes; Model MD–88 airplanes; and C–9 (military) series airplanes; as listed in McDonnell Douglas Service Bulletin DC9–27–346, Revision 01, dated July 29, 1997; certificated in any category.

Note 1: This AD applies to each airplane identified in the preceding applicability provision, regardless of whether it has been modified, altered, or repaired in the area subject to the requirements of this AD. For airplanes that have been modified, altered, or repaired so that the performance of the requirements of this AD is affected, the owner/operator must request approval for an alternative method of compliance in accordance with paragraph (b) of this AD. The request should include an assessment of the effect of the modification, alteration, or repair on the unsafe condition addressed by this AD; and, if the unsafe condition has not been eliminated, the request should include specific proposed actions to address it.

Compliance: Required as indicated, unless accomplished previously.

To prevent a jammed speed brake handle pin, which could result in retraction of the spoilers and full advancement of the left throttle during a go-around, accomplish the following:

(a) Within 12 months after the effective date of this AD, perform an inspection to determine if the latching lever pin of the speed brake passes an axial force check, and a visual inspection to determine if the staking of the latching lever pin is ''acceptable'', in accordance with McDonnell Douglas Service Bulletin DC9–27–346, Revision 01, dated July 29, 1997.

Note 2: The criteria for determining whether the staking is ''acceptable'' are defined in Figure 1 of the service bulletin.

(1) Condition 1. If the pin passes the axial force check and the staking is found to be acceptable, no further action is required by this AD.

(2) Condition 2. If the pin passes the axial force check and the staking is found to be unacceptable, accomplish the actions specified in Condition 2, Option 1, or Condition 2, Option 2 of the Accomplishment Instructions of the service bulletin. These actions shall be accomplished at the times specified in paragraph E. ''Compliance'' of the service bulletin. Accomplishment of the replacement of the speed brake latching lever constitutes terminating action for the repetitive inspection requirements of this AD.

(3) Condition 3. If the pin fails the axial force check and the staking is found to be unacceptable, accomplish the actions specified in Condition 3, Option 1, or Condition 3, Option 2 of the Accomplishment Instructions of the service bulletin. These actions shall be accomplished at the times specified in paragraph E. ''Compliance'' of the service bulletin. Accomplishment of the replacement of the speed brake latching lever constitutes terminating action for the repetitive inspection requirements of this AD.

(b) An alternative method of compliance or adjustment of the compliance time that provides an acceptable level of safety may be used if approved by the Manager, Los Angeles Aircraft Certification Office (ACO), FAA, Transport Airplane Directorate. Operators shall submit their requests through an appropriate FAA Principal Maintenance Inspector, who may add comments and then send it to the Manager, Los Angeles ACO.

Note 3: Information concerning the existence of approved alternative methods of compliance with this AD, if any, may be obtained from the Los Angeles ACO.

(c) Special flight permits may be issued in accordance with sections 21.197 and 21.199 of the Federal Aviation Regulations (14 CFR 21.197 and 21.199) to operate the airplane to a location where the requirements of this AD can be accomplished.

(d) The actions shall be done in accordance with McDonnell Douglas Service Bulletin DC9–27–346, Revision 01, dated July 29, 1997. This incorporation by reference was approved by the Director of the Federal Register in accordance with 5 U.S.C. 552(a) and 1 CFR part 51. Copies may be obtained from The Boeing Company, Douglas Products Division, 3855 Lakewood Boulevard, Long Beach, California 90846, Attention: Technical Publications Business Administration, Dept. C1–L51 (2–60). Copies may be inspected at the FAA, Transport Airplane Directorate, 1601 Lind Avenue, SW., Renton, Washington; or at the FAA, Transport Airplane Directorate, Los Angeles Aircraft Certification Office, 3960 Paramount Boulevard, Lakewood, California; or at the Office of the Federal Register, 800 North Capitol Street, NW., suite 700, Washington, DC.

(e) This amendment becomes effective on June 26, 1998.

Issued in Renton, Washington, on May 14, 1998.

John J. Hickey,

Acting Manager, Transport Airplane Directorate, Aircraft Certification Service.

[FR Doc. 98–13407 Filed 5–21–98; 8:45 am]

BILLING CODE 4910–13–P

DEPARTMENT OF TRANSPORTATION

Federal Aviation Administration

14 CFR Part 39

[Docket No. 98–NM–165–AD; Amendment 39–10540; AD 98–11–13]

RIN 2120–AA64

Airworthiness Directives; Raytheon Model Hawker 800XP Series Airplanes, and Hawker 800 (U–125A Military Derivative) Airplanes

AGENCY: Federal Aviation Administration, DOT.

ACTION: Final rule; request for comments.

SUMMARY: This amendment adopts a new airworthiness directive (AD) that is applicable to certain Raytheon Model Hawker 800XP series airplanes and Hawker 800 (U–125A military derivative) airplanes. This action requires removal of the sealant from the firewall mounting flanges and mounting points of the fire extinguisher assemblies; removal of sealant obstructing the discharge tubes of the fire extinguisher assemblies; cleaning and flushing of the mounting flanges, mounting points, and discharge tubes with solvent; and installation of new gaskets on the firewall mounting flanges and mounting points. This amendment is prompted by reports of excessive sealant applied during manufacture of the firewall mounting flanges and mounting points of the fire extinguisher assemblies, which subsequently entered and obstructed the discharge tubes. The actions specified in this AD are intended to prevent obstructions of the discharge tubes of the fire extinguisher assemblies, which could result in improper distribution of the fire extinguishing agent within the nacelle in the event of a fire.

DATES: Effective June 8, 1998.

The incorporation by reference of certain publications listed in the regulations is approved by the Director of the Federal Register as of June 8, 1998.

Comments for inclusion in the Rules Docket must be received on or before July 21, 1998.

ADDRESSES: Submit comments in triplicate to the Federal Aviation Administration (FAA), Transport Airplane Directorate, ANM–114, Attention: Rules Docket No. 98–NM–165–AD, 1601 Lind Avenue, SW., Renton, Washington 98055–4056.

The service information referenced in this AD may be obtained from Raytheon Aircraft Company, Manager Service

Engineering, Hawker Customer Support Department, P.O. Box 85, Wichita, Kansas 67201–0085. This information may be examined at the FAA, Transport Airplane Directorate, 1601 Lind Avenue, SW., Renton, Washington; or at the FAA, Small Airplane Directorate, Wichita Aircraft Certification Office, 1801 Airport Road, Room 100, Mid-Continent Airport, Wichita, Kansas; or at the Office of the Federal Register, 800 North Capitol Street, NW., suite 700, Washington, DC.

FOR FURTHER INFORMATION CONTACT: Randy Griffith, Aerospace Engineer, Systems and Propulsion Branch, ACE–116W, FAA, Small Airplane Directorate, Wichita Aircraft Certification Office, 1801 Airport Road, Room 100, Mid-Continent Airport, Wichita, Kansas 67209; telephone (316) 946–4145; fax (316) 946–4407.

SUPPLEMENTARY INFORMATION: The FAA has received a report indicating that, during manufacture testing of the fire suppression system on a Raytheon Model Hawker 800XP series airplane, the system failed to operate properly. Investigation has revealed that the discharge tubes of the fire extinguisher assemblies were obstructed. Testing of other Model Hawker 800XP series airplanes and a Hawker 800 (U–125A military derivative) airplane revealed similar obstructions of the discharge tubes of the fire extinguisher assemblies. The cause of the obstructions has been attributed to excessive sealant applied during manufacture of the firewall mounting flanges and mounting points of the fire extinguisher assemblies, which subsequently entered and obstructed the discharge tubes. This condition, if not corrected, could result in improper distribution of the fire extinguishing agent within the nacelle in the event of a fire.

Explanation of Relevant Service Information

The FAA has reviewed and approved Raytheon Service Bulletin SB.26–3197, dated April 1998, which describes procedures for removal of the sealant from the firewall mounting flanges and mounting points of the fire extinguisher assemblies; removal of sealant obstructing the discharge tubes of the fire extinguisher assemblies; cleaning and flushing of the mounting flanges, mounting points, and discharge tubes with solvent; and installation of new gaskets on the firewall mounting flanges and mounting points. Accomplishment of the actions specified in the service bulletin is intended to adequately address the identified unsafe condition.

Explanation of the Requirements of the Rule

Since an unsafe condition has been identified that is likely to exist or develop on other airplanes of the same type design, this AD is being issued to prevent obstructions of the discharge tubes of the fire extinguisher assemblies, which could result in improper distribution of the fire extinguishing agent within the nacelle in the event of a fire. This AD requires removal of the sealant from the firewall mounting flanges and mounting points of the fire extinguisher assemblies; removal of sealant obstructing the discharge tubes of the fire extinguisher assemblies; cleaning and flushing of the mounting flanges, mounting points, and discharge tubes with solvent; and installation of new gaskets on the firewall mounting flanges and mounting points.

Determination of Rule's Effective Date

Since a situation exists that requires the immediate adoption of this regulation, it is found that notice and opportunity for prior public comment hereon are impracticable, and that good cause exists for making this amendment effective in less than 30 days.

Comments Invited

Although this action is in the form of a final rule that involves requirements affecting flight safety and, thus, was not preceded by notice and an opportunity for public comment, comments are invited on this rule. Interested persons are invited to comment on this rule by submitting such written data, views, or arguments as they may desire. Communications shall identify the Rules Docket number and be submitted in triplicate to the address specified under the caption **ADDRESSES**. All communications received on or before the closing date for comments will be considered, and this rule may be amended in light of the comments received. Factual information that supports the commenter's ideas and suggestions is extremely helpful in evaluating the effectiveness of the AD action and determining whether additional rulemaking action would be needed.

Comments are specifically invited on the overall regulatory, economic, environmental, and energy aspects of the rule that might suggest a need to modify the rule. All comments submitted will be available, both before and after the closing date for comments, in the Rules Docket for examination by interested persons. A report that summarizes each FAA-public contact concerned with the substance of this AD will be filed in the Rules Docket.

Commenters wishing the FAA to acknowledge receipt of their comments submitted in response to this rule must submit a self-addressed, stamped postcard on which the following statement is made: ''Comments to Docket Number 98–NM–165–AD.'' The postcard will be date stamped and returned to the commenter.

Regulatory Impact

The regulations adopted herein will not have substantial direct effects on the States, on the relationship between the national government and the States, or on the distribution of power and responsibilities among the various levels of government. Therefore, in accordance with Executive Order 12612, it is determined that this final rule does not have sufficient federalism implications to warrant the preparation of a Federalism Assessment.

The FAA has determined that this regulation is an emergency regulation that must be issued immediately to correct an unsafe condition in aircraft, and that it is not a ''significant regulatory action'' under Executive Order 12866. It has been determined further that this action involves an emergency regulation under DOT Regulatory Policies and Procedures (44 FR 11034, February 26, 1979). If it is determined that this emergency regulation otherwise would be significant under DOT Regulatory Policies and Procedures, a final regulatory evaluation will be prepared and placed in the Rules Docket. A copy of it, if filed, may be obtained from the Rules Docket at the location provided under the caption **ADDRESSES**.

List of Subjects in 14 CFR Part 39

Air transportation, Aircraft, Aviation safety, Incorporation by reference, Safety.

Adoption of the Amendment

Accordingly, pursuant to the authority delegated to me by the Administrator, the Federal Aviation Administration amends part 39 of the Federal Aviation Regulations (14 CFR part 39) as follows:

PART 39—AIRWORTHINESS DIRECTIVES

1. The authority citation for part 39 continues to read as follows:

Authority: 49 U.S.C. 106(g), 40113, 44701.

§ 39.13 [Amended]

2. Section 39.13 is amended by adding the following new airworthiness directive:

98–11–13 Raytheon Aircraft Company (Formerly Beech): Amendment 39–10540. Docket 98–NM–165–AD.

Applicability: Model Hawker 800XP series airplanes and Hawker 800 (U–125A military derivative) airplanes, as listed in Raytheon Service Bulletin SB.26–3197, dated April 1998; certificated in any category.

Note 1: This AD applies to each airplane identified in the preceding applicability provision, regardless of whether it has been modified, altered, or repaired in the area subject to the requirements of this AD. For airplanes that have been modified, altered, or repaired so that the performance of the requirements of this AD is affected, the owner/operator must request approval for an alternative method of compliance in accordance with paragraph (b) of this AD. The request should include an assessment of the effect of the modification, alteration, or repair on the unsafe condition addressed by this AD; and, if the unsafe condition has not been eliminated, the request should include specific proposed actions to address it.

Compliance: Required as indicated, unless accomplished previously.

To prevent obstructions of the discharge tubes of the fire extinguisher assemblies, which could result in improper distribution of the fire extinguishing agent within the nacelle in the event of a fire, accomplish the following:

(a) Within 25 days after the effective date of this AD, accomplish paragraphs (a)(1), (a)(2), (a)(3), and (a)(4) of this AD, in accordance with Raytheon Service Bulletin SB.26–3197, dated April 1998.

(1) Remove the sealant from the firewall mounting flanges and mounting points of the fire extinguisher assemblies;

(2) Remove all sealant obstructing the discharge tubes of the fire extinguisher assemblies;

(3) Clean and flush the mounting flanges, mounting points, and discharge tubes with solvent; and

(4) Install new gaskets on the firewall mounting flanges and mounting points.

(b) An alternative method of compliance or adjustment of the compliance time that provides an acceptable level of safety may be used if approved by the Manager, Wichita Aircraft Certification Office (ACO), FAA, Small Airplane Directorate. Operators shall submit their requests through an appropriate FAA Principal Maintenance Inspector, who may add comments and then send it to the Manager, Wichita ACO.

Note 2: Information concerning the existence of approved alternative methods of compliance with this AD, if any, may be obtained from the Wichita ACO.

(c) Special flight permits may be issued in accordance with §§ 21.197 and 21.199 of the Federal Aviation Regulations (14 CFR 21.197 and 21.199) to operate the airplane to a location where the requirements of this AD can be accomplished.

(d) The actions shall be done in accordance with Raytheon Service Bulletin SB.26–3197, dated April 1998. This incorporation by reference was approved by the Director of the Federal Register in accordance with 5 U.S.C. 552(a) and 1 CFR part 51. Copies may be obtained from Raytheon Aircraft Company, Manager Service Engineering, Hawker Customer Support Department, P.O. Box 85, Wichita, Kansas 67201–0085. Copies may be inspected at the FAA, Transport Airplane Directorate, 1601 Lind Avenue, SW., Renton, Washington; or at the FAA, Small Airplane Directorate, Wichita Aircraft Certification Office, 1801 Airport Road, Room 100, Mid-Continent Airport, Wichita, Kansas; or at the Office of the Federal Register, 800 North Capitol Street, NW., suite 700, Washington, DC.

(e) This amendment becomes effective on June 8, 1998.

Issued in Renton, Washington, on May 15, 1998.

John J. Hickey,

Acting Manager, Transport Airplane Directorate, Aircraft Certification Service.

[FR Doc. 98–13684 Filed 5–21–98; 8:45 am]

BILLING CODE 4910–13–U

DEPARTMENT OF TRANSPORTATION

Federal Aviation Administration

14 CFR Part 97

[Docket No. 29226; Amdt. No. 1869]

RIN 2120–AA65

Standard Instrument Approach Procedures; Miscellaneous Amendments

AGENCY: Federal Aviation Administration (FAA), DOT.

ACTION: Final rule.

SUMMARY: This amendment establishes, amends, suspends, or revokes Standard Instrument Approach Procedures (SIAPs) for operations at certain airports. These regulatory actions are needed because of changes occurring in the National Airspace System, such as the commissioning of new navigational facilities, addition of new obstacles, or changes in air traffic requirements. These changes are designed to provide safe and efficient use of the navigable airspace and to promote safe flight operations under instrument flight rules at the affected airports.

DATES: An effective date for each SIAP is specified in the amendatory provisions.

Incorporation by reference—approved by the Director of the Federal Register on December 31, 1980, and reapproved as of January 1, 1982.

ADDRESSES: Availability of matter incorporated by reference in the amendment is as follows:

For Examination—

1. FAA Rules Docket, FAA Headquarters Building, 800 Independence Avenue, SW., Washington, DC 20591;

2. The FAA Regional Office of the region in which affected airport is located; or

3. The Flight Inspection Area Office which originated the SIAP.

For Purchase—Individual SIAP copies may be obtained from:

1. FAA Public Inquiry Center (APA–200), FAA Headquarters Building, 800 Independence Avenue, SW., Washington, DC 20591; or

2. The FAA Regional Office of the region in which the affected airport is located.

By Subscription—Copies of all SIAPs, mailed once every 2 weeks, are for sale by the Superintendent of Documents, US Government Printing Office, Washington, DC 20402.

FOR FURTHER INFORMATION CONTACT: Donald P. Pate, Flight Procedure Standards Branch (AMCAFS–420), Flight Technologies and Programs Division, Flight Standards Service, Federal Aviation Administration, Mike Monroney Aeronautical Center, 6500 South MacArthur Blvd. Oklahoma City, OK. 73169 (Mail Address: P.O. Box 25082 Oklahoma City, OK. 73125) telephone: (405) 954–4164.

SUPPLEMENTARY INFORMATION: This amendment to part 97 of the Federal Aviation Regulations (14 CFR part 97) establishes, amends, suspends, or revokes Standard Instrument Approach Procedures (SIAPs). The complete regulatory description on each SIAP is contained in the appropriate FAA Form 8620 and the National Flight Data Center (FDC)/Permanent (P) Notices to Airmen (NOTAM) which are incorporated by reference in the amendment under 5 U.S.C. 552(a), 1 CFR part 51, and § 97.20 of the Federal Aviation's Regulations (FAR). Materials incorporated by reference are available for examination or purchase as stated above.

The large number of SIAPs, their complex nature, and the need for a special format make their verbatim publication in the **Federal Register** expensive and impractical. Further, airmen do not use the regulatory text of the SIAPs, but refer to their graphic depiction of charts printed by publishers of aeronautical materials. Thus, the advantages of incorporation by reference are realized and publication of the complete description of each SIAP contained in FAA form documents is unnecessary. The provisions of this amendment state the affected CFR (and FAR) sections, with

the types and effective dates of the SIAPs. This amendment also identifies the airport, its location, the procedure identification and the amendment number.

The Rule

This amendment to part 97 of the Federal Aviation Regulations (14 CFR part 97) establishes, amends, suspends, or revokes SIAPs. For safety and timeliness of change considerations, this amendment incorporates only specific changes contained in the content of the following FDC/P NOTAM for each SIAP. The SIAP information in some previously designated FDC/Temporary (FDC/T) NOTAMs is of such duration as to be permanent. With conversion to FDC/P NOTAMs, the respective FDC/T NOTAMs have been canceled.

The FDC/P NOTAMs for the SIAPs contained in this amendment are based on the criteria contained in the U.S. Standard for Terminal Instrument Approach Procedures (TERPS). In developing these chart changes to SIAPs by FDC/P NOTAMs, the TERPS criteria were applied to only these specific conditions existing at the affected airports. All SIAP amendments in this rule have been previously issued by the FAA in a National Flight Data Center (FDC) Notice to Airmen (NOTAM) as an emergency action of immediate flight safety relating directly to published aeronautical charts. The circumstances which created the need for all these SIAP amendments requires making them effective in less than 30 days.

Further, the SIAPs contained in this amendment are based on the criteria contained in the TERPS. Because of the close and immediate relationship between these SIAPs and safety in air commerce, I find that notice and public procedure before adopting these SIAPs are impracticable and contrary to the public interest and, where applicable, that good cause exists for making these SIAPs effective in less than 30 days.

Conclusion

The FAA has determined that this regulation only involves an established body of technical regulations for which frequent and routine amendments are necessary to keep them operationally current. It, therefore—(1) is not a ''significant regulatory action'' under Executive Order 12866; (2) is not a ''significant rule'' under DOT Regulatory Policies and Procedures (44 FR 11034; February 26, 1979); and (3) does not warrant preparation of a regulatory evaluation as the anticipated impact is so minimal. For the same reason, the FAA certifies that this amendment will not have a significant economic impact on a substantial number of small entities under the criteria of the Regulatory Flexibility Act.

List of Subjects in 14 CFR Part 97

Air Traffic Control, Airports, Navigation (Air).

Issued in Washington, DC on May 15, 1998.

Tom E. Stuckey,

Acting Director, Flight Standards Service.

Adoption of the Amendment

Accordingly, pursuant to the authority delegated to me, part 97 of the Federal Aviation Regulations (14 CFR part 97) is amended by establishing, amending, suspending, or revoking Standard Instrument Approach Procedures, effective at 0901 UTC on the dates specified, as follows:

PART 97—STANDARD INSTRUMENT APPROACH PROCEDURES

1. The authority citation for part 97 is revised to read as follows:

Authority: 49 U.S.C. 40103, 40113, 40120, 44701; 49 U.S.C. 106(g); and 14 CFR 11.49(b)(2).

2. Part 97 is amended to read as follows:

§ 97.23, 97.25, 97.27, 97.29, 97.31, 97.33, 97.35 [Amended]

By amending: § 97.23 VOR, VOR/DME, VOR or TACAN and VOR/DME or TACAN; § 97.25 LOC, LOC/DME, LDA, LDA/DME, SDF, SDF/DME; § 97.27 NDB, NDB/DME; § 97.29 ILS, ILS/DME, ISMLS, MLS, MLS/DME, MLS/RNAV; § 97.31 RADAR SIAPs; § 97.33 RNAV SIAPs; and § 97.35 COPTER SIAPs, identified as follows:

* * * Effective Upon Publication.

FDC date	State	City	Airport	FDC No.	SIAP
04/29/98	MA	Bedford	Laurence G. Hanscom Field	8/2601	VOR Rwy 23 Amdt 8A...
04/29/98	MA	Beverly	Beverly Muni	8/2593	NDB or GPS–A Amdt 12...
04/29/98	MA	Beverly	Beverly Muni	8/2594	VOR Rwy 16 Amdt 4...
04/29/98	MA	Beverly	Beverly Muni	8/2595	LOC Rwy 16 Amdt 5...
04/29/98	ME	Augusta	Augusta State	8/2600	ILS Rwy 17 Amdt 2...
04/29/98	ME	Bangor	Bangor Intl	8/2599	ILS Rwy 33 Amdt 10...
04/29/98	ME	Bar Harbor	Hancock County-Bar Harbor	8/2598	LOC/DME BC Rwy 4 Amdt 1...
04/29/98	ME	Presque Isle	Northern Maine Regional Airport at Presque Isle.	8/2597	ILS Rwy 1 Amdt 5...
04/30/98	IN	Bloomington	Bloomington/Monroe County	8/2619	VOR or GPS Rwy 6, Amdt 16A...
04/30/98	IN	Bloomington	Bloomington/Monroe County	8/2620	VOR or GPS Rwy 17, Amdt 11A...
04/30/98	IN	Bloomington	Bloomington/Monroe County	8/2621	VOR or GPS Rwy 24, Amdt 10A...
04/30/98	IN	Bloomington	Bloomington/Monroe County	8/2622	VOR/DME Rwy 35, Amdt 14A...
04/30/98	IN	Bloomington	Bloomington/Monroe County	8/2623	ILS Rwy 35, Amdt 4A...
05/01/98	CT	Hartford	Hartford-Brainard	8/2646	GPS Rwy 2 Orig...
05/01/98	CT	Hartford	Hartford-Brainard	8/2657	VOR or GPS–A Amdt 9A...
05/01/98	CT	Hartford	Hartford-Brainard	8/2658	NDB Rwy 2 Amdt 2...
05/01/98	CT	Hartford	Hartford-Brainard	8/2660	LDA Rwy 2 Amdt 1A...
05/01/98	IL	Chicago	Chicago O'Hare Intl	8/2652	VOR Rwy 22R Amdt 8A...
05/01/98	NC	Asheboro	Asheboro Muni	8/2664	NDB or GPA Rwy 21 Amdt 2A...
05/04/98	ME	Eastport	Eastport Muni	8/2699	GPS Rwy 15 Orig-A...
05/05/98	FL	Sarasota (Bradenton)	Sarasota/Bradenton Intl	8/2750	ILS Rwy 14, Amdt 3...
05/05/98	FL	Sarasota (Bradenton)	Sarasota/Bradenton Intl	8/2751	VOR or GPS Rwy 32, Amdt 8A...
05/05/98	FL	Sarasota (Bradenton)	Sarasota/Bradenton Intl	8/2752	ILS Rwy 32, Amdt 4A...
05/05/98	FL	Sarasota (Bradenton)	Sarasota/Bradenton Intl	8/2754	VOR or GPS Rwy 14, Amdt 16...
05/05/98	FL	Sarasota (Bradenton)	Sarasota/Bradenton Intl	8/2755	NDB Rwy 32, Amdt 6...
05/05/98	FL	Sarasota (Bradenton)	Sarasota/Bradenton Intl	8/2756	Radar-1, Amdt 5A...
05/05/98	FL	Sarasota (Bradenton)	Sarasota/Bradenton Intl	8/2761	VOR or GPS Rwy 22, Amdt 10...
05/05/98	WI	Fort Atkinson	Fort Atkinson Muni	8/2749	VOR or GPS–A, Orig...

FDC date	State	City	Airport	FDC No.	SIAP
05/07/98	FL	St. Petersburg	St. Petersburg-Clearwater Intl	8/2786	ILS Rwy 17L, Amdt 19B...
05/07/98	MS	Greenville	Mid Delta Regional	8/2788	ILS Rwy 18L Amdt 9...
05/07/98	NC	Kenansville	Duplin County	8/2795	LOC Rwy 22 Orig-A...
05/07/98	NC	Kenansville	Duplin County	8/2796	NDB or GPS Rwy 22 Amdt 5A...
05/07/98	OH	Lorain/Elyria	Lorain County Regional	8/2783	VOR or GPS–A, Amdt 2...
05/07/98	OH	Lorain/Elyria	Lorain County Regional	8/2785	ILS Rwy 7, Amdt 6...
05/08/98	FL	Marco Island	Marco Island	8/2824	VOR/DME Rwy 17, Amdt 6...
05/08/98	FL	Marco Island	Marco Island	8/2825	GPS Rwy 17, Orig...
05/08/98	FL	Marco Island	Marco Island	8/2832	LOC Rwy 17, Orig...
05/08/98	FL	Tallahassee	Tallahassee Regional	8/2827	VOR or GPS Rwy 18, Amdt 9...
05/08/98	FL	Tallahassee	Tallahassee Regional	8/2828	Radar-1, Amdt 4...
05/08/98	SC	Clemson	Clemson-Oconee County	8/2817	NDB or GPS–A Amdt 5...
05/13/98	IN	Bloomington	Bloomington/Monroe County	8/2899	NDB or GPS Rwy 35, Amdt 4A...

[FR Doc. 98–13750 Filed 5–21–98; 8:45 am]
BILLING CODE 4910–13–M

DEPARTMENT OF TRANSPORTATION

Federal Aviation Administration

14 CFR Part 97

[Docket No. 29227; Admt. No. 1870]

RIN 2120–AA65

Standard Instrument Approach Procedures; Miscellaneous Amendments

AGENCY: Federal Aviation Administration (FAA), DOT.

ACTION: Final rule.

SUMMARY: This amendment establishes, amends, suspends, or revokes Standard Instrument Approach Procedures (SIAP's) for operations at certain airports. These regulatory actions are needed because of the adoption of new or revised criteria, or because of changes occurring in the National Airspace System, such as the commissioning of new navigational facilities, addition of new obstacles, or changes in air traffic requirements. These changes are designed to provide safe and efficient use of the navigable airspace and to promote safe flight operations under instrument flight rules at the affected airports.

DATES: An effective date for each SIAP is specified in the amendatory provisions.

Incorporation by reference-approved by the Director of the Federal Register on December 31, 1980, and reapproved as of January 1, 1982.

ADDRESSES: Availability of matters incorporated by reference in the amendment is as follows:

For Examination—

1. FAA Rules Docket, FAA Headquarters Building, 800 Independence Avenue, SW., Washington, DC 20591;

2. The FAA Regional Office of the region in which the affected airport is located; or

3. The Flight Inspection Area Office which originated the SIAP.

For Purchase—Individual SIAP copies may be obtained from:

1. FAA Public Inquiry Center (APA–200), FAA Headquarters Building, 800 Independence Avenue, SW., Washington, DC 20591; or

2. The FAA Regional Office of the region in which the affected airport is located.

By Subscription—Copies of all SIAP's mailed once every 2 weeks, are for sale by the Superintendent of Documents, U.S. Government Printing Office, Washington, DC 20402.

FOR FURTHER INFORMATION CONTACT: Donald P. Pate, Flight Procedure Standards Branch (AMCAFS–420), Flight Technologies and Programs Division, Flight Standards Service, Federal Aviation Administration, Mike Monroney Aeronautical Center, 6500 South MacArthur Blvd., Oklahoma City, OK 73169 (Mail Address: P.O. Box 25082 Oklahoma City, OK 73125) telephone: (405) 954–4164.

SUPPLEMENTARY INFORMATION: This amendment to part 97 of the Federal Aviation Regulations (14 CFR part 97) establishes, amends, suspends, or revoke SIAP's. The complete regulatory description of each SIAP is contained in official FAA form documents which are incorporated by reference in this amendment under 5 U.S.C. 552(a), 1 CFR part 51, and 14 CFR 97.20 of the Federal Aviation Regulations (FAR). The applicable FAA Forms are identified as FAA Form 8260–5. Materials incorporated by reference are available for examination or purchase as stated above.

The large number of SIAP's, their complex nature, and the need for a special format make their verbatim publication in the **Federal Register** expensive and impractical. Further, airmen do not use the regulatory text of the SIAPs, but refer to their graphic depiction on charts printed by publishers of aeronautical materials. Thus, the advantages of incorporation by reference are realized and publication of the complete description of each SIAP contained in FAA form documents is unnecessary. The provisions of this amendment state the affected CFR sections, with the types and effective dates of the SIAPs. This amendment also identifies the airport, its location, the procedure identification and the amendment number.

This amendment to part 97 is effective upon publication of each separate SIAP as contained in the transmittal. The SIAP's contained in this amendment are based on the criteria contained in the United States Standard for Terminal Instrument Approach Procedures (TERPS). In developing these SIAPs, the TERPS criteria were applied to the conditions existing or anticipated at the affected airports.

The FAA has determined through testing that current non-localizer type, non-precision instrument approaches developed using the TERPS criteria can be flown by aircraft equipped with a Global Positioning System (GPS) and or Flight Management System (FMS) equipment. In consideration of the above, the applicable SIAP's will be altered to include ''or GPS or FMS'' in the title without otherwise reviewing or modifying the procedure. (Once a stand alone GPS or FMS procedure is developed, the procedure title will be altered to remove ''or GPS or FMS'' from these non-localizer, non-precision instrument approach procedure titles.)

The FAA has determined through extensive analysis that current SIAP's intended for use by Area Navigation (RNAV) eqipped aircraft can be flown by aircraft utilizing various other types of navigational equipment. In consideration of the above, those SIAP's currently designated as ''RNAV'' will be redesignated as ''VOR/DME RNAV''

without otherwise reviewing or modifying the SIAP's.

Because of the close and immediate relationship between these SIAP's and safety in air commerce, I find that notice and public procedure before adopting these SIAPs are, impracticable and contrary to the public interest and, where applicable, that good cause exists for making some SIAPs effective in less than 30 days.

The FAA has determined that this regulation only involves an established body of technical regulations for which frequent and routine amendments are necessary to keep them operationally current. It, therefore—(1) is not a ''significant regulatory action'' under Executive Order 12866; (2) is not a ''significant rule'' under DOT Regulatory Policies and Procedures (44 FR 11034; February 26, 1979); and (3) does not warrant preparation of a regulatory evaluation as the anticipated impact is so minimal. For the same reason, the FAA certifies that this amendment will not have a significant economic impact on a substantial number of small entities under the criteria of the Regulatory Flexibility Act.

List of Subjects in 14 CFR Part 97

Air traffic control, Airports, Navigation (air).

Issued in Washington, DC, on May 15, 1998.

Tom E. Stuckey,

Acting Director, Flight Standards Service.

Adoption of the Amendment

Accordingly, pursuant to the authority delegated to me, part 97 of the Federal Aviation Regulations (14 CFR part 97) is amended as follows:

PART 97—STANDARD INSTRUMENT APPROACH PROCEDURES

1. The authority citation for part 97 continues to read:

Authority: 49 U.S.C. 106(g), 40103, 40106, 40113–40114, 40120, 44502, 44514, 44701, 44719, 44721–44722.

§§ 97.23, 97.27, 97.33, 97.35 [Amended]

2. Amend 97.23, 97.27, 97.33, and 97.35, as appropriate, by adding, revising, or removing the following SIAP's, effective at 0901 UTC on the dates specified:

* * * *Effective June 18, 1998*

Bethel, AK, Bethel, VOR or GPS RWY 18, Amdt 8B CANCELLED
Bethel, AK, Bethel, VOR RWY 18, Amdt 8B
Bethel, AK, Bethel, VOR or GPS RWY 36, Amdt 7A CANCELLED
Bethel, AK, Bethel, VOR RWY 36, Amdt 7A
Kotzebue, AK, Ralph Wien Memorial, VOR/DME or GPS RWY 8, Amdt 2 CANCELLED
Kotzebue, AK, Ralph Wien Memorial, VOR/DME RWY 8, Amdt 2
Kotzebue, AK, Ralph Wien Memorial, VOR/DME 2 or GPS RWY 26, Orig CANCELLED
Kotzebue, AK, Ralph Wien Memorial, VOR/DME 2 RWY 8, Orig
McGrath, AK, McGrath, VOR/DME or TACAN or GPS RWY 16, Orig CANCELLED
McGrath, AK, McGrath, VOR/DME or TACAN or RWY 16, Orig
Greenville, AL, Greenville Muni, NDB or GPS RWY 32, Amdt 4 CANCELLED
Greenville, AL, Greenville Muni, NDB RWY 32, Amdt 4
Atlanta, GA, Fulton County Airport-Brown Field, VOR/DME or GPS RWY 26, Orig CANCELLED
Atlanta, GA, Fulton County Airport-Brown Field, VOR/DME RWY 26, Orig
Delano, CA, Delano Muni, VOR or GPS RWY 32, Amdt 6 CANCELLED
Delano, CA, Delano Muni, VOR RWY 32, Amdt 6
Milledgeville, GA, Baldwin County, NDB or GPS RWY 28, Orig CANCELLED
Milledgeville, GA, Baldwin County, NDB RWY 28, Orig
Knoxville, IA, Knoxville Muni, NDB or GPS RWY 15, Amdt 6 CANCELLED
Knoxville, IA, Knoxville Muni, NDB RWY 15, Amdt 6
Knoxville, IA, Knoxville Muni, NDB or GPS RWY 33, Amdt 5 CANCELLED
Knoxville, IA, Knoxville Muni, NDB RWY 33, Amdt 5
Mapleton, IA, Mapleton Muni, NDB or GPS RWY 20, Amdt 4 CANCELLED
Mapleton, IA, Mapleton Muni, NDB RWY 20, Amdt 4
Osceola, IA, Osceola Muni, VOR/DME or GPS RWY 18, Amdt 1 CANCELLED
Osceola, IA, Osceola Muni, VOR/DME RWY 18, Amdt 1
Vinton, IA, Vinton Veterans Memorial Airpark, NDB or GPS RWY 27, Amdt 3A
Vinton, IA, Vinton Veterans Memorial Airpark, NDB RWY 27, Amdt 3A
Portland, IN, Portland Muni, NDB or GPS RWY 27, Amdt 7 CANCELLED
Portland, IN, Portland Muni, NDB RWY 27, Amdt 7
Frankfort, KY, Capital City, VOR or GPS RWY 24, Amdt 2 CANCELLED
Frankfort, KY, Capital City, VOR RWY 24, Amdt 2
Louisville, KY, Standiford Field, NDB or GPS RWY 29, Amdt 19A CANCELLED
Louisville, KY, Standiford Field, NDB RWY 29, Amdt 19A
Frenchville, ME, Northern Aroostook Regional, NDB or GPS RWY 32, Amdt 5 CANCELLED
Frenchville, ME, Northern Aroostook Regional, NDB RWY 32, Amdt 5
Beaver Island, MI, Beaver Island, NDB RWY 27, Orig CANCELLED
Beaver Island, MI, Beaver Island, NDB or GPS RWY 27, Orig
Burlington, NC, Burlington-Alamance Regional, NDB or GPS RWY 6 Amdt 4 CANCELLED
Burlington, NC, Burlington-Alamance Regional, NDB RWY 6 Amdt 4
Hickory, NC, Hickory Regional, NDB or GPS RWY 24, Amdt 4C CANCELLED
Hickory, NC, Hickory Regional, NDB RWY 24, Amdt 4C
Kenansville, NC, Duplin County, NDB or GPS RWY 22, Amdt 5A CANCELLED
Kenansville, NC, Duplin County, NDB RWY 22, Amdt 5A
Ainsworth, NE, Ainsworth Muni, VOR or GPS RWY 35, Amdt 3A CANCELLED
Ainsworth, NE, Ainsworth Muni, VOR RWY 35, Amdt 3A
Aurora, NE, Aurora, Muni, NDB or GPS RWY 16, Amdt 2 CANCELLED
Aurora, NE, Aurora, Muni, NDB RWY 16, Amdt 2
Gordon, NE, Gordon Muni, NDB or GPS RWY 22, Amdt 2 CANCELLED
Gordon, NE, Gordon Muni, NDB RWY 22, Amdt 2
Kimball, NE, Kimball Muni/Robert E. Arraj Field, NDB or GPS RWY 28, Orig-A CANCELLED
Kimball, NE, Kimball Muni/Robert E. Arraj Field, NDB RWY 28, Orig-A
Grove, OK, Grove Muni, VOR/DME RNAV or GPS RWY 36, Amdt 2 CANCELLED
Grove, OK, Grove Muni, VOR/DME RNAV RWY 36, Amdt 2
Philadelphia, PA, Northeast Philadelphia, VOR/DME RNAV or GPS RWY 15, Amdt 2 CANCELLED
Philadelphia, PA, Northeast Philadelphia, VOR/DME RNAV RWY 15, Amdt 2
Philadelphia, PA, Northeast Philadelphia, VOR/DME RNAV or GPS RWY 33, Amdt 4 CANCELLED
Philadelphia, PA, Northeast Philadelphia, VOR/DME RNAV RWY 33, Amdt 4
Lubbock, TX, Lubbock Intl, VOR/DME RNAV or GPS RWY 8, Amdt 2 CANCELLED
Lubbock, TX, Lubbock Intl, VOR/DME RNAV RWY 8, Amdt 2
Lubbock, TX, Lubbock Intl, NDB or GPS RWY 17R, Amdt 15 CANCELLED
Lubbock, TX, Lubbock Intl, NDB RWY 17R, Amdt 15
Lubbock, TX, Lubbock Intl, NDB or GPS RWY 26, Amdt 2 CANCELLED
Lubbock, TX, Lubbock Intl, NDB RWY 26, Amdt 2

Racine, WI, John H Batten Field, VOR/DME RNAV RWY 22, Amdt 3 CANCELLED
Racine, WI, John H Batten Field, VOR/DME RNAV or GPS RWY 22, Amdt 3
Racine, WI, John H Batten Field, NDB RWY 4, Amdt 3A CANCELLED
Racine, WI, John H Batten Field, NDB or GPS RWY 4, Amdt 3A
Ravenswood, WV. Jackson County, VOR/DME or GPS RWY 3, Amdt 2A CANCELLED
Ravenswood, WV. Jackson County, VOR/DME RWY 4, Orig

[FR Doc. 98–13747 Filed 5–21–98; 8:45 am]

BILLING CODE 4910–13–M

DEPARTMENT OF TRANSPORTATION

Federal Aviation Administration

14 CFR Part 97

[Docket No. 29225; Amdt. No. 1868]

RIN 2120–AA65

Standard Instrument Approach Procedures; Miscellaneous Amendments

AGENCY: Federal Aviation Administration (FAA), DOT.

ACTION: Final rule.

SUMMARY: This amendment establishes, amends, suspends, or revokes Standard Instrument Approach Procedures (SIAPs) for operations at certain airports. These regulatory actions are needed because of the adoption of new or revised criteria, or because of changes occurring in the National Airspace System, such as the commissioning of new navigational facilities, addition of new obstacles, or changes in air traffic requirements. These changes are designed to provide safe and efficient use of the navigable airspace and to promote safe flight operations under instrument flight rules at the affected airports.

DATES: An effective date for each SIAP is specified in the amendatory provisions.

Incorporation by reference-approved by the Director of the Federal Register on December 31, 1980, and reapproved as of January 1, 1982.

ADDRESSES: Availability of matters incorporated by reference in the amendment is as follows:

For Examination—

1. FAA Rules Docket, FAA Headquarters Building, 800 Independence Avenue, SW., Washington, DC 20591;

2. The FAA Regional Office of the region in which the affected airport is located; or

3. The Flight Inspection Area Office Office which originated the SIAP.

For Purchase—Individual SIAP copies may be obtained from:

1. FAA Public Inquiry Center (APA–200), FAA Headquarters Building, 800 Independence Avenue, SW., Washington, DC 20591; or

2. The FAA Regional Office of the region in which the affected airport is located.

By Subscription—Copies of all SIAPs, mailed once every 2 weeks, are for sale by the Superintendent of Documents, U.S. Government Printing Office, Washington, DC 20402.

FOR FURTHER INFORMATION CONTACT: Donald P. Pate, Flight Procedure Standards Branch (AMCAFS–420), Flight Technologies and Programs Division, Flight Standards Service, Federal Aviation Administration, Mike Monroney Aeronautical Center, 6500 South MacArthur Blvd. Oklahoma City, OK. 73169 (Mail Address: P.O. Box 25082 Oklahoma City, OK. 73125) telephone: (405) 954–4164.

SUPPLEMENTARY INFORMATION: This amendment to part 97 of the Federal Aviation Regulations (14 CFR part 97) establishes, amends, suspends, or revokes Standard Instrument Approach Procedures (SIAPs). The complete regulatory description of each SIAP is contained in official FAA form documents which are incorporated by reference in this amendment under 5 U.S.C. 552(a), 1 CFR part 51, and § 97.20 of the Federal Aviation Regulations (FAR). The applicable FAA Forms are identified as FAA Forms 8260–3, 8260–4, and 8260–5. Materials incorporated by reference are available for examination or purchase as stated above.

The large number of SIAPs, their complex nature, and the need for a special format make their verbatim publication in the **Federal Register** expensive and impractical. Further, airmen do not use the regulatory text of the SIAPs, but refer to their graphic depiction on charts printed by publishers of aeronautical materials. Thus, the advantages of incorporation by reference are realized and publication of the complete description of each SIAP contained in FAA form documents is unnecessary. The provisions of this amendment state the affected CFR (and FAR) sections, with the types and effective dates of the SIAPs. This amendment also identifies the airport, its location, the procedure identification and the amendment number.

The Rule

This amendment to part 97 is effective upon publication of each separate SIAP as contained in the transmittal. Some SIAP amendments may have been previously issued by the FAA in a National Flight Data Center (NFDC) Notice to Airmen (NOTAM) as an emergency action of immediate flight safety relating directly to published aeronautical charts. The circumstances which created the need for some SIAP amendments may require making effective in less than 30 days. For the remaining SIAPs, an effective date at least 30 days after publication is provided.

Further, the SIAPs contained in this amendment are based on the criteria contained in the U.S. Standard for Terminal Instrument Approach Procedures (TERPS). In developing these SIAPs, the TERPS criteria were applied to the conditions existing or anticipated at the affected airports. Because of the close and immediate relationship between these SIAPs and safety in air commerce, I find that notice and public procedure before adopting these SIAPs are impracticable and contrary to the public interest and, where applicable, that good cause exists for making some SIAPs effective in less than 30 days.

The FAA has determined that this regulation only involves an established body of technical regulations for which frequent and routine amendments are necessary to keep them operationally current. It, therefore—(1) is not a ''significant regulatory action'' under Executive Order 12866; (2) is not a ''significant rule'' under DOT Regulatory Policies and Procedures (44 FR 11034; February 26, 1979); and (3) does not warrant preparation of a regulatory evaluation as the anticipated impact is so minimal. For the same reason, the FAA certifies that this amendment will not have a significant economic impact on a substantial number of small entities under the criteria of the Regulatory Flexibility Act.

List of Subjects in 14 CFR Part 97

Air traffic control, Airports, Navigation (air).

Issued in Washington, DC on May 15, 1998.

Tom E. Stuckey,

Acting Director, Flight Standards Service.

Adoption of the Amendment

Accordingly, pursuant to the authority delegated to me, part 97 of the

Federal Aviation Regulations (14 CFR part 97) is amended by establishing, amending, suspending, or revoking Standard Instrument Approach Procedures, effective at 0901 UTC on the dates specified, as follows:

PART 97—STANDARD INSTRUMENT APPROACH PROCEDURES

1. The authority citation for part 97 is revised to read as follows:

Authority: 49 U.S.C. 106(g), 40103, 40113, 40120, 44701; and 14 CFR 11.49(b)(2).

2. Part 97 is amended to read as follows:

§§ 97.23, 97.25, 97.27, 97.29, 97.31, 97.33, 97.35 [Amended]

By amending § 97.23 VOR, VOR/DME, VOR or TACAN, and VOR/DME, or TACAN; § 97.25 LOC, LOC/DME, LDA, LDA/DME, SDF, SDF/DME; § 97.27 NDB, NDB/DME; § 97.29 ILS, ILS/DME, ISMLS, MLS, MLS/DME, MLS/RNAV; § 97.31 RADAR SIAPs; § 97.33 RNAV SIAPs; and § 97.35 COPTER SIAPs, identified as follows:

Effective 18 June, 1998

Birmingham, AL, Birmingham Intl, RADAR–1, Amdt 19
Crestview, FL, Bob Sikes, LOC RWY 17, Amdt 2, CANCELLED
Crestview, FL, Bob Sikes, ILS RWY 17, Orig
Louisville, KY, Louisville Intl-Standiford Field, NDB OR GPS RWY 1, Amdt 8A, CANCELLED
Louisville, KY, Louisville Intl-Standiford Field, ILS RWY 1, Amdt 11B, CANCELLED
Louisville, KY, Louisville Intl-Standiford Field, ILS RWY 19, Amdt 9B, CANCELLED
Louisville, KY, Louisville Intl-Standiford Field, ILS RWY 35L, Orig
Louisville, KY, Louisville Intl-Standiford Field, GPS RWY 17L, Orig
Louisville, KY, Louisville Intl-Standiford Field, GPS RWY 35R, Orig
Louisville, KY, Louisville Intl-Standiford Field, GPS RWY 29, Orig

Effective 16 July, 1998

Fernandina Beach, FL, Fernandina Beach Muni, GPS RWY 13, Orig
Marshall, MN, Marshall Muni-Ryan Field, VOR RWY 12, Amdt 7
Marshall, MN, Marshall Muni-Ryan Field, ILS RWY 12, Amdt 1
Cleveland, OH, Cuyahoga County, ILS RWY 23, Amdt 13
Dayton, OH, Dayton-Wright Brothers, LOC RWY 20, Amdt 5
Dayton, OH, Dayton-Wright Brothers, NDB OR GPS–A, Amdt 1
Okmulgee, OK, Okmulgee Muni, VOR OR GPS–A, Orig
Okmulgee, OK, Okmulgee Muni, VOR OR GPS RWY 22, Amdt 1, CANCELLED
Pawtucket, RI, North Central State, VOR/DME RNAV RWY 5, Amdt 6, CANCELLED
Pawtucket, RI, North Central State, VOR/DME RNAV RWY 23, Amdt 5, CANCELLED
Nashville, TN, Nashville Intl, ILS RWY 2R, Amdt 5
Salt Lake City, UT, Salt Lake City Intl, RADAR–1, Amdt 15, CANCELLED
Salt Lake City, UT, Salt Lake City Muni 2, RADAR–2, Amdt 1, CANCELLED
Land O'Lakes, WI, Kings Land O'Lakes, NDB OR GPS RWY 14, Amdt 9
Land O'Lakes, WI, Kings Land O' Lakes, NDB RWY 32, Orig

Effective August 13, 1998

Galena, AK, Edward G. Pitka, Sr., GPS RWY 7, Orig
Galena, AK, Edward G. Pitka, Sr., GPS RWY 25, Orig
Nome, AK, Nome, GPS RWY 2, Orig
Nome, AK, Nome, GPS RWY 9, Orig
Nome, AK, Nome, GPS RWY 27, Orig
Yakutat, AK, Yakutat, GPS RWY 11, Orig
Yakutat, AK, Yakutat, GPS RWY 29, Orig
Tuscaloosa, AL, Tuscaloosa Muni, VOR OR TACAN OR GPS RWY 22, Amdt 14
Camarillo, CA, Camarillo, GPS RWY 8, Orig
Camarillo, CA. Camarillo, GPS RWY 26, Orig
Redlands, CA, Redlands Muni, GPS–A, Orig
Gainesville, GL, Gainesville Regional, GPS RWY 10, Orig
Gainesville, FL, Gainesville Regional, GPS RWY 28, Orig
Tallahassee, FL, Tallahassee Regional, ILS RWY 27, Amdt 5
Boone, IA, Boone Muni, GPS RWY 14, Amdt 1
Boone, IA, Boone Muni, GPS RWY 32, Orig
Baltimore, MD, Baltimore-Washington Intl, ILS RWY 28, Amdt 12
Baltimore, MD, Baltimore-Washington Intl, ILS RWY 33L, Amdt 8
Ord, NE, Evelyn Sharp Field, NDB OR GPS RWY 13, Amdt 4
Ord, NE, Evelyn Sharp Field, GPS RWY 31, Orig
Lawton, OK, Lawton-Ft Sill Regional, VOR RWY 35, Amdt 20
Lawton, OK, Lawton-Ft Sill Regional, ILS RWY 35, Amdt 7
Lawton, OK, Lawton-Ft Sill Regional, RADAR-1, Amdt 4
New Lisbon, WI, Mauston-New Lisbon Union, GPS RWY 32, Amdt 1
Cody, WI, Yellowstone Regional, GPS–B, Orig

Note: The FAA published an Amendment in Docket No. 29199, Amdt No. 1865 to Part 97 of the Federal Aviation Regulations (VOL 63, No. 81, Page 23209; dated April 28, 1998) under Section 97.33 effective June 18, 1998, which is hereby amended to read:

** * *Effective August 13, 1998*

Delano, CA, Delano Muni, VOR RWY 32, Amdt 7
Delano, CA, Delano Muni, GPS RWY 32, Orig
Porterville, CA, Porterville, Muni, GPS RWY 12, Orig
Porterville, CA, Porterville Muni, GPS RWY 30, Orig

The following procedures are rescinded:

Tracy, CA, Tracy Muni, GPS RWY 25, Orig
Tracy, CA, Tracy Muni, GPS RWY 29, Orig

[FR Doc. 98–13746 Filed 5–21–98; 8:45 am]
BILLING CODE 4910–13–M

DEPARTMENT OF TRANSPORTATION

Office of the Secretary

14 CFR Parts 207, 208, 212, and 380

[Docket OST–97–2356]

RIN 2105–AB91

Aviation Charter Rules

AGENCY: Office of the Secretary, DOT.

ACTION: Final rule.

SUMMARY: DOT is amending its charter air transportation regulations to update the rules, make changes reflecting current operating procedures and include the following specific modifications:

Eliminate the 10-day waiting period after the filing of a prospectus or an amendment before Public Charters may be advertised or sold;

Allow charter operators to accept payment by credit cards for Public Charter flights;

Delete the minimum contract size of 20 seats for passenger charters;

Permit direct air carriers to sell charter flights within 7 days of departure;

Codify the Department's practice allowing a ''sub-operator'' to buy into another Public Charter operator's prospectus as a principal;

Eliminate the requirement for brief or ''mini'' prospectus to be filed by direct air carriers conducting foreign-originating flights for foreign charter operators;

Consolidate the rules applicable to U.S. and foreign direct air carriers into a single part; and

Broaden the definitions of ''immediate family'' in parts 212 and 380 to include the member's (or student participant's) spouse, children, and parents, whether or not they share a household with the member. This action is taken at the Department's initiative and responds to President Clinton's Regulatory Reinvention Initiative.

EFFECTIVE DATE: The rule shall become effective on June 22, 1998.

FOR FURTHER INFORMATION CONTACT: Charles W. McGuire, Chief, Special Authorities Division (X–57), Department of Transportation, 400 Seventh Street, SW., Washington, DC 20590 (202) 366–1037.

SUPPLEMENTARY INFORMATION:

Background

On September 16, 1992, the Department of Transportation issued a notice of proposed rulemaking (NPRM) [57 FR 42864, September 16, 1992] which proposed to (1) replace the filing of prospectus for Public Charters with an annual registration by charter operators; (2) eliminate the regulation of ''major changes'' in charter itineraries and the specific terms of Public Charter operator-participant contracts, but require that consumers receive actual notice of important terms affecting the charter; (3) simplify the financial security arrangements applicable to charter operators; (4) eliminate the financial security arrangements applicable to direct air carriers; (5) permit consumers to make credit card payments to charter operators for Public Charters; (6) remove the prohibition against charter sales within 7 days of departure by direct air carriers or charter operators affiliated with direct air carriers; (7) simplify and eliminate unnecessary requirements applicable to non-public charters (i.e., single entity, affinity, and mixed charters), and add provisions for the operation of gambling, junkets; and (8) consolidate the rules applicable to direct air carriers into a single part, removing obsolete and repetitive references and requirements.

Comments and reply comments on the Department's proposals were filed by 17 direct air carriers, 20 charter operators, 6 trade associations, 3 banks that serve (or served) as depository banks for charters, 1 state department of transportation, and 15 private citizens.[1] While many of those responding supported the basic goals of reducing the burden of paperwork, simplifying the regulatory process, eliminating obsolete requirements, and liberalizing relationships in the marketplace, when it came to the proposed changes to the basic consumer protection provisions of the regulations, the majority urged the Department to retain the existing requirements. Except as discussed below we have decided not to adopt many of the rule changes proposed in the NPRM.

Discussion of Comments

The issues specifically addressed by commenters agreeing of disagreeing with proposals in the NPRM or offering alternative approaches fall primarily into the following categories: (1) Filing Requirements: (2) Protection of the Charter Participants' Expectations; (3) Protection of the Charter Participants' Funds; (4) Financial/Security Rules Applicable to Direct Air Carriers; (5) Direct Air Carrier Responsibilities; (6) Use of Credit Cards for Payments to Charter Operators; and (7) Other Matters.

(1) Filing Requirements

The NPRM proposed to substitute an annual registration requirement for U.S. charter operators in place of the present prospectus filings for each series of flights. This form would identify the applicant and its ownership, and would certify the existence of a contract with the carrier and the existence of a valid security agreement and that both complied with the requirements of Part 380. The applicant would be required to notify the Department within 10 days of any change in the required information. Once the proper registration was filed, the charter operator could begin sales immediately without filing a flight program and without waiting the 10 days for approval. The proposed treatment of foreign charter operators was slightly different in that they would still be required to seek authority in the U.S. as they do now.

While commenters generally approved of the proposal to require only an annual registration by charter operators, three of the industry associations (Association of Retail Travel Agents, American Society of Travel Agents and National Air Carriers Association) commented about several essential requirements of the registration process which permit the Department to regulate or discipline charter operators. The commenters referred specifically to the filing of schedules and changes thereto as well as to the certification that required security agreements to be in place. One of the associations also stated that if one believes the existing bond/escrow rules should be retained, then ''specific identifying information for the operator's escrow accounts should also be provided and kept current.'' The purpose of the proposed relaxation of prospectus filing rules in the NPRM was to make the process less burdensome and possibly less expensive for the charter operator and to reduce the Department's regulatory workload. We are sympathetic to these comments and our further review of the mechanism of this proposed change leads us to conclude that the removal of the current system of prospectuses and amendments would compromise charter participants' ability to be assured of the legitimacy of charter programs and our ability to maintain useful records necessary to monitor Public Charter programs. The Department will not adopt the change proposed in the NPRM to replace the prospectus filing with an annual registration.

(2) Protection of Public Charter Participants' Expectations

Current charter rules contain provisions designed to protect the expectations of members of the public flying on Public Charters (14 CFR 380.30–380.33a). These rules prescribe the essential elements of contracts between charter operators and charter participants, and provide that certain major changes (hotels, flight dates, origin and destination cities, price) would entitle charter participants to cancel and receive a refund. The rules included precise requirements regarding the time for notifying charter participants of such changes and providing refunds where applicable.

In the NPRM, we proposed to eliminate the current provisions in the Public Charter rules that (1) specify the

[1] Specifically, comments in this proceeding were filed by Aeronautica de Cancun, Air 2000 Limited, Air Canada, Air Espana S.A., Air Transport Association of America (on behalf of Alaska Airlines, American Airlines, Continental Airlines, Delta Air Lines, Trans World Airlines, United Air Lines, and USAir), Airline Brokers Company, Association of Retail Travel Agents, American Society of Travel Agents, American Trans Air, Apple Vacations, Av Atlantic, Azores Express, Balair, Bruce Hall Sports, Condor Flugdienst, First of America Bank, Funway Holidays, Funjet, Great American Airways, GMV International, Hapag-Lloyd Fluggesellschaft, Harrah's Casino Hotel Atlantic City, Jamaica Express, Marazul Charters, Military Travel Corporation, Minnesota Department of Transportation, MLT Vacations, National Air Carrier Association (on behalf of American Trans Air, Evergreen International Airlines, Miami Air, Tower Air, and World Airways), National Bank of Royal Oak, North American Airlines, NW Tours, Northwest Airlines, Private Jet Expeditions, Regional Airline Association, Relvas Tours, Rich International Airways, Ryan International Airlines, Santo Tours, Schwaben International, Security Pacific National Trust Company (New York), Sunbird Vacations, Sunburst Holidays, The Surety Association of America, Trans Global Tours, Trans National Travel, Trans World Airlines, Travel Impressions, United States Tour Operator Association, Worldwide Airline Services d/b/a Leisure Air, and a number of individuals.

contents of the contract between the charter operator and the charter participant; (2) regulate certain ''major changes'' in the price or itinerary that would entitle charter participants to cancel and receive a refund; and (3) prohibit charter operators from accepting charter participants' payments without first obtaining a signed operator-participant contract (§§ 380.31–380.33 and 380.12). In place of these provisions, we proposed to require charter operators to provide prospective participants with notice of, and access to, any conditions imposed by the operator (proposed § 380.7). The notice was to include, among other things, the terms under which the operator reserves the right to change the itinerary or price of the charter, and the charter participant's rights to cancel and receive funds under various circumstances. The notice, which would have been provided to the participant at the time of sale, could have been part of the charter operator's brochures or other solicitation materials. Just as with scheduled service (See 14 CFR Part 253), if a participant did not receive such notice, he or she would not have been bound by any term restricting refunds, imposing monetary penalties, or allowing the operator to change the itinerary or raise prices. The proposed rule also provided that, if a person purchased a charter and requested a copy of the full operator-participant contract within 5 days of the purchase, that person's payment would have been fully refundable if she or she canceled within 5 days after receiving the full contract, or by the day of the flight, whichever was earlier.

While some commenters supported our proposed elimination of the government-imposed contract provisions and the requirement that signed operator-participant contracts be received with or before receipt of payment for a charter flight, all who commented opposed some part of the notice of conditions offered as a substitute. The National Air Carriers Association and several charter operators opposed that portion of the proposed rule that would allow a customer up to 5 days after purchasing a charter trip to request a copy of the full contract and an additional 5 days after receiving the contract to cancel and receive a full refund. One of the commenters stated that such a provision would present serious practical difficulties, leaving charter operators with no viable opportunity to resell a late-canceling participant's seat and very likely incurring substantial cancellation fees for accommodations reserved for that charter participant. An adverse side effect of this situation described by the commenter would be that on heavily booked flights potential charter participants desiring to travel would be turned away and denied travel due to someone else's tardiness in deciding to cancel. It was suggested that a full charter operator-participant agreement be provided to the charter participant at or before the time of purchase. Then, when the charter participant had made the purchase, there should be no right to cancel and receive a full refund on the basis of dissatisfaction with the terms and conditions. Referring to the practice in the scheduled air carrier industry where the passenter is required to purchase a ticket within 24 hours after making a reservation, a commenter proposed that the section could be revised to provide that, in cases where the full agreement is furnished to the charter participant at time of purchase, the contract review period is limited to one day during which the customer may cancel and receive a full refund. The commenter also noted that the charter participant always has the right to obtain and study the contract and take any time necessary to fully consider the terms and conditions prior to paying.[2] We believe that the commenters have raised valid concerns over the details of the proposed notice of conditions and how it would work in practice.

We also received comments urging us to retain some or all of the ''major change'' provisions of our current rules, particularly those dealing with material changes in the origin or destination of the flights, the departure/return dates, the hotels provided, and the price of the trip. The current rules require that charter participants be informed of any such changes and in many situations be given the opportunity to cancel and be given a full refund if they find the changes unacceptable.

The existing rule states that beginning 10 days before departure, operators and carriers may not cancel a charter (unless it is physically impossible to operate) or raise the price. If at any time the operator changes a date or city, or raises the price by more than 10 percent, affected participants have the right to cancel and receive a full refund. Participants must be notified of such ''major changes'' within 10 days. Overbooking on charters is banned.

[2] In order to satisfy the requirements of this section, the notice would have to be in writing and in a form that allows the participant to review it. Thus, reciting the notice in a radio commercial or flashing a graphic in a TV commercial would not suffice.

The NPRM proposed to abolish all of those protections. For example, the operator would simply be required to provide notice of the existence of any contract conditions that permit him to make such changes. Under the proposed rule, operators could wait until the day of departure to cancel a flight due simply to lagging sales. They could change the destination of the charter, or move the departure date by a week, or raise the price by $200 two days before the flight; if anyone wanted to cancel as a result, the operator could impose a 100 percent cancellation penalty—and then resell the seat.

The regulatory reform rationale driving the NPRM was an attempt to redefine a part of the industry that appeared to be heavily restricted by artificial distinctions among the various kinds of air transportation available to the public. To accomplish this, the Department proposed to remove administrative burdens on airlines and charter operators, simplify financial security requirements, and liberalize sales of charters by eliminating time constraints, operator-participant contracts, major change rules, and requirements for non-public charters. It was noted that current charter rules still impose limitations on direct air carriers flying charters that are relatively stringent compared with those relating to the operation of scheduled air service. Similarly detailed requirements apply to charter operators who sell charter reservations to the general public. A significant part of the consumer protection features of the current rule concerns price changes, cancellations, itinerary changes and the contents of operator-participant contracts designed to ensure participants' expectations.

The notice requirement proposed in the NPRM was modeled on the contract disclosure rule for scheduled service, 14 CFR Part 253. However, charters work differently from scheduled service; all the market forces that might modify the behavior of a scheduled carrier are not in play in charter service. By the nature of the scheduled system, carriers operate flights even where the revenues on a particular operation don't cover their costs (i.e., the load factor is low). However, flight cancellations due to lack of participation and other changes are more likely to occur on charters, and when they do occur are likely to be at the last possible moment allowable under the rules, currently 10 days before departure of the outbound flight. Absent the current rule banning cancellations within the last 10 days before departure, a charter operator could wait to cancel or make another major change until two

or three days before planned departure in hopes of getting sizable bookings through wholesalers shortly before departure. Allowing charter operators unfettered discretion to fail to keep their end of the bargain with consumers would be unfair.

Also, when scheduled-service flights experience irregularities, passengers have more options than charter passengers because:

- Scheduled carriers operate more frequent flights than do charter operators. For example, if an 8 a.m. scheduled flight to Denver is canceled, the same carrier can usually rebook a passenger on another of its, or another airline's, Denver flights no more than a few hours later.
- Many scheduled airlines have agreements with each other so that one scheduled carrier can put passengers from its canceled or delayed flight on another airline's flight, at no additional cost to a passenger.
- Scheduled carriers operate many different routes; they may serve more than one airport in the same city. If they cancel a flight they might be able to reroute the passengers via another city or to another airport at the same destination city with limited inconvenience to the passengers.

We conclude that while the notice regime of Part 253 (Notice of Terms of Contract and Carriage) has worked well to protect schedule passengers, our proposal to apply a similar approach in the charter area would likely result in an unacceptable risk to charter participants. The American Society of Travel Agents (ASTA) commenting on the proposed annual registration thought it might be worth trying but ''charter operators should still be required to file copies of promotional material containing the proposed flight schedules at least 10 days before a flight.'' ASTA went on to say that the requirement would be ''to discourage the publication of fictitious flight schedules which are then changed at the last minute to convenience the tour operator or the airline.'' This theme was also expressed by the Association of Retail Travel Agents (ARTA) which said that ''we realize from experience the need for updated promotional materials containing proposed flight schedules at least 10 days before flight.'' ARTA continued this discussion stating that ''Agents need to see the exact product available to enable them to fully inform their customers so that prices and scheduling can be compared for customer benefits.'' Comments from the University of Minnesota touched the broader scope of the issue stating that the present process for regulating Public Charters, including the filing process, had proved to be beneficial and necessary. We will retain these provisions along with the other parts of the customer protection package in the final rule.

(3) Protection of the Charter Participants Funds

We tentatively concluded in the NPRM that the present financial security requirements applicable to Public Charters should be revised. Under the current rules, Public Charter operators must obtain either (1) an acceptable security arrangement in an amount equal to the charter price for the air transportation if air-only or, if land arrangements are involved, in an amount equal to one, two, or three times the price of the air transportation depending on the duration of the charter trip; or (2) an acceptable security arrangement in the amount of $10,000 per flight up to a maximum of $200,000 for 20 or more flights plus a depository (escrow) account at a bank, into which all payments by or on behalf of charter participants must be deposited and from which they may not be removed except under specified conditions (§§ 380.34, 380.34a, 380.35).

We postulated that existing financial security requirements may be unduly burdensome on or costly to Public Charter operators, and proposed to substitute one or more of the various options set forth in the NPRM for the existing surety/escrow combination. The options proposed in the NPRM were: (1) A security agreement [3] in an amount of at least $30,000 times the number of flights up to a maximum of $600,000; (2) a security agreement sufficient to cover the cost of air transportation sold but not yet provided to consumers (i.e., a ''rolling bond'' under which the amount of the security could increase or decrease over time as the number of charter participants who have paid but have not completed their travel changes); (3) a requirement that U.S. or foreign direct air carriers participating in Public Charter programs bear financial responsibility for charter participant funds paid for charter air transportation (i.e., by either refunding moneys paid or providing the transportation for which it was paid) in the event of insolvency or other failure to perform by the charter operator; (4) a security agreement in an amount not less than the charter price for the air transportation (whether or not the charter flights being sold include land arrangements); or (5) a security agreement in an amount not less than the cost of the charter trip paid by the participant, including air transportation and land arrangements, if applicable.

None on these options included retention of the existing surety/escrow system of protecting charter participant funds; however, in view of comments in earlier rulemakings in support of the present escrow system, we specifically asked for comments on whether we should retain that system.

Virtually all of the parties and individuals that commented on the NPRM discussed the financial security options, with a large majority in favor of retaining the surety/escrow option for charter operators permitted under the present rules. Those who commented on the specific alternative financial security measures generally noted that each would provide a measure of financial protection, but the comments were varied as to which, if any, should be adopted. Several commenters felt the escrow requirement should be done away with, but that the amount of any required security agreement should be less than the $30,000 per flight/ $600,000 maximum amount proposed.

Of those opposed to the current surety/escrow option, several charter operators cited administrative burdens and large fees imposed by banks. One charter operator complained in particular of fees of between $175 and $260 per departure, which it asserts are not offset by interest earned on an escrow account, and of being assessed other expenses related to maintaining the account, such as for wire transfer fees, cancellation fees, and other charges incurred by the bank to pay hotels, land operators, and air carriers. Others submitted comments against retention of the current surety/escrow option, primarily on the basis that such arrangements have not always sufficiently protected consumers' funds, particularly when operators have filed for protection under bankruptcy laws.

In support of retaining the present surety/escrow option, many individual charter operators and an association representing charter operators asserted that the present system provides a necessary discipline on the industry and that financially stable and responsible charter operators are not burdened by the escrow system. One of these commenters pointed out that the escrow account system has worked well, when

[3] Term security agreement would be defined as it is today to include either a surety bond, or a surety trust agreement or letter-of-credit that provides protection equal to or greater than that provided by a bond (See new § 380.2). The agreement would have to be for an amount that would cover all one-way or round-trip flights that the Public Charter operator will actively advertise, sell, or operate at any one time, including any flights that may be completed but are within the 60-day period for the filing of claims.

properly administered, to provide consumer protection at little or no cost, and it should continue as an option. It suggested, however, that there is no need to require a security agreement, such as the $10,000 per flight/$200,000 maximum required under present rules, in addition to the depository account.

The members of the banking industry that commented on the NPRM, as well as the private citizens who commented, were unanimously in favor of retaining some form of protection requiring a depository account. One bank that handles charter operator escrow accounts stated that the depository method is the safest and most economical manner in which to provide protection of consumer funds, in particular because of the high risk to banks of surety bonds and trusts, the costs of which must be passed on to charter operators and, ultimately, consumers. Another bank asserted that the interest earned on escrow accounts more than makes up for any charges assessed by the banks for maintenance of the accounts.

Many of the direct air carriers and associations filing comments on behalf of direct air carriers recognized that the present surety/escrow system carries with it certain costs and burdens. Most, however, suggested that it be kept in place because it has proven to be an effective means of protecting charter participant payments. One of these commenters suggested retention of the present escrow system, at least until the Department has had an opportunity to examine the effects on the charter industry of other changes to the Public Charter rules that may result from this proceeding. Another suggested that if there is to be a change, we retain the present surety/escrow system, and, in the interest of allowing the industry to respond to market requirements, also allow any of the other proposed systems as optional requirements.

The $30,000-per-flight, $600,000 maximum alternative received some support from several direct air carriers and from well-established charter operators. Many other direct air carriers and charter operators, as well as financial institutions, argued against such a security agreement requirement as being too expensive for many charter operators to obtain and maintain. Other commenters noted the requirement, which would triple currently required security amounts, would be unnecessarily broad for the many small-aircraft, domestic charter operations, so that the security required per flight could far exceed the cost of the air transportation. On the other hand, one commenter noted that the $30,000-per-flight figure could be insufficient to cover certain wide-body aircraft operations, while another felt that the $600,000 maximum would be insufficient to cover many large charter operator programs.

We see merit in each of the comments.We recognize that the proposed $30,000-per-flight, $600,000 maximum amount might not fully cover the operations of all charter operators. However, we are also concerned that adoption of the proposal could result in a situation where charter operators, particularly small businesses, would be required to obtain security in an amount far exceeding the cost of the flight, if it could be afforded at all. We conclude that we should not adopt this proposed alternative for protecting participant payments.

Another method of financial security discussed by the NPRM is a security agreement sufficient to cover the cost of air transportation sold but not yet provided to consumers. This ''rolling bond'' alternative would allow the amount of the security to increase or decrease over time as the number of charter participants who have paid but have not completed their travel changes.[4] This option was addressed by one charter operator and two of the banks. The charter operator was in favor of the option but one of the banks declared it ''unworkably difficult'' to administer since it could involve maintaining records and accounts involving dozens of charter flights and thousands of charter participants each day. We have determined not to adopt this option at this time since, under the rolling bond concept, the amount of coverage with respect to the protection of funds is determined solely by the charter operator and we are not convinced such a program could be administered to afford effective consumer protection. We will not adopt the rolling bond as an alternative security measure.

Another option that we have concluded should not be afforded to charter operators is to permit a direct carrier to agree to bear financial responsibility for charter participant funds paid to the charter operators, either by refunding moneys paid or providing the transportation paid for by the consumer. Most of the direct air carriers and their associations commenting on specific alternative proposals strongly urged the Department not to adopt this option. The many objections to adopting this financial security measure centered on a concern that holding a direct air carrier to be the guarantor of a charter operator's obligations would change the fundamental relationship of the two entities where direct air carriers have historically been merely contractors supplying services, without any effective means to assess or control the financial risks associated with such responsibility. It was argued that the direct air carrier and a non-affiliated charter operator have at best an arm's-length relationship and that the airline has no realistic opportunity or capability to effectively investigate the charter operator's financial status, managerial competence, or compliance disposition. It was also pointed out that the airline is not a party to any agreement between the charter operator and the participants and should not be placed in the middle of any disputes arising out of the participants' dissatisfaction with the arrangements.

Relating to the discussion above, one major direct air carrier and its affiliated charter operator, in a joint comment, suggested that the Department should adopt the option, expanded to allow a direct air carrier to assume financial responsibility for all of the obligations of an affiliated charter operator, including the affiliate's obligations for those flights for which it is not the direct air carrier. Permitting the direct air carrier to stand behind the obligations of its affiliate would, according to this commenter, afford a greater incentive to monitor the charter operator's business and provide a superior level of protection for consumers in those cases in which he direct air carrier is a scheduled carrier with wide operations. Several other commenters suggested that no affiliation should be required between the direct air carrier performing the flights and the charter operator whose programs would be backed.

Although we are somewhat receptive to this proposal, particularly where there is a true affiliation between the charter operator and direct air carrier (e.g., where one controls, is controlled by, or is under common control with the other), we are concerned that a blanket approval of this type of arrangement could lead to abuses, either where the direct air carrier overextends itself and guarantees a large charter program for which it has insufficient capacity available to operate in the event it becomes necessary to do so, or where financially weak direct air carriers ''rent'' their backing to charter operators seeking to avoid the financial security

[4] As with the air-only security agreement discussed above, under this option charter operators would be required to retain records sufficient to enable us to ascertain the separate cost to the consumer of the air and land portions of a charter package.

rules. We have decided, therefore, not to expand the rule as requested, but to review any such proposed arrangements on a case-by-case under the waiver provisions of § 380.9. Any direct air carrier seeking to provide such guarantees to operators must be prepared to demonstrate to our satisfaction that it has the wherewithal to undertake such an arrangement, particularly if it involves a substantial charter program.

One financial security option proposed in the NPRM is a security agreement in an amount not less than the charter price for the air transportation, whether or not the charter flight being sold includes land arrangements. Some of those that commented on this option were concerned about the lack of protection it entails for the land portion of a charter participant's payments and pointed out that it may provide less protection than is available today. As has been the case for years, today any consumer can purchase as a ''package'' from a retail travel agent or other entity a tour that includes travel on scheduled service and land arrangements that are independent of the air service. While the air portion of the price of the tour is ''protected'' after the ticket is issued, in the sense that the direct air carrier is obligated to honor the ticket for transportation or provide a refund, there is no Department-mandated protection for the land portion of the tour price. We reasoned that, to the extent present requirements place charter operators at a competitive disadvantage in providing services to consumers at the lowest possible price, it may be in the public interest to modify those requirements. Under this financial security option, we could do so without providing any less protection than that afforded purchasers of tours using scheduled service.[5]

In the NPRM, we also expressed our concern that the availability of this option, under which only the air transportation portion would be protected by a security agreement, could be subject to abuse if a charter operator would attempt to allocate only a small portion of the total tour package cost to the air transportation to be provided. We presented several possibilities for dealing with this problem, including a requirement that charter operators state separately their prices for the air and land portions of a package or a requirement that charter operators retain records sufficient to enable the Department to ascertain the separate cost to consumers of the air and land portions.

We have concluded however that we should not adopt this proposal. Charter air tours involving land accommodations are distinguishable from tour packages using scheduled service. As discussed earlier, in the event of a flight cancellation or change, passengers using scheduled service have more options than do charter passengers and they are more likely to reach their destination in a timely fashion without serious inconvenience or monetary loss. Passengers using scheduled service are therefore less likely to forfeit any portion of their land arrangements as a result of a flight irregularity or other problem. We thus remain concerned about a system that would fail to protect the land as well as the air portions of a charter participant's trip. The present rule in this regard appears reasonable and to have worked well and, on balance, we see no reason to change it at this time. The Department has authority to handle potential abuses in this area through its general authority to investigate and prohibit unfair and deceptive practices or unfair methods of competition (e.g., 49 U.S.C. 41712).[6]

The comments on the alternative of requiring a security agreement that would cover the cost of both the air and land portion of a charter trip received little direct support. Those opposed to the proposal cited the expense, in general, of obtaining such security. The opposition, however, was based on supposition that the Department would require such a large security agreement. In recognition of the fact that the expense of obtaining and maintaining financial security in an amount sufficient to cover the charter operator's cost of air and land may be unattractive to, or unattainable for, some charter operators, we will not adopt this financial security alternative as a requirement.

We continue to believe that there is a need for protection of charter participants' funds and for their right to receive refunds for services paid for but not received. As we pointed out in the NPRM, there is a unique financial risk inherent in the sale of charter transportation by charter operators that have not been required to meet our fitness requirements, and we conclude that the public benefits of retaining financial protections for charter participant funds significantly outweigh the cost of compliance.

After careful consideration of all of the comments in this proceeding, we have determined that we should retain the existing financial security rules as the means by which charter operators provide financial protection for consumer funds. A number of commenters stressed the view that significant benefits of the present system outweigh any administrative burdens and costs of compliance. Such comments from those intimately involved in the charter industry, particularly those parties upon whom the costs and burdens of the escrow requirements most heavily fall, together with the demonstrated benefits of the existing surety/escrow system, convince us that we should retain the existing system.

As a final point on the protection of consumer funds, we note elsewhere in this rule that we are allowing the use of credit cards as a means by which charter participants may pay for charter flights. If charter customers follow the trend of scheduled air transportation passengers, upwards of 70 percent of charter participants will be paying for their trips by credit card and not by cash or check. Those paying by credit cards will also be afforded the protections of Federal credit card laws.

(4) Financial Security Rules Applicable to Direct Air Carriers

Under the current rules, direct air carriers conducting charter flights are required to establish either (1) a surety bond in an unlimited amount, or (2) an escrow account into which all charter payments are to be deposited until after the flight is operated (14 CFR 207.17, 208.40, 212.12). These requirements apply to all U.S.-originating passenger charters, including Public and ''non-public'' type charters, as well as Overseas Military Personnel Charters originating outside of the United States. Direct air carriers using escrow accounts that engage in direct sales of Public Charters (i.e., without using an independent Public Charter operator) are also required to meet the bonding requirements of Part 380 applicable to Public Charter operators in addition to their flight escrow account.

We indicated in the NPRM that we were tentatively of the view that the present financial security requirements applicable to direct air carriers conducting charters, including direct

[5] Indeed, adoption of this option may enhance competition in other ways, as is apparent from the comments of one party that arranges both charter and scheduled service tour packages, and, as an enhancement to consumers and retail agents, elects to advertise the fact that it places in escrow the land portion of the scheduled service tours.

[6] Moreover, as part of their continuing obligation under new § 380.10 to ensure that any Public Charters they conduct are in compliance with the rules, we also expect that the direct air carriers performing the charters will ensure that the security agreement is at least in an amount sufficient to cover the cost of the air transportation to be provided as set forth in the direct air carrier charters operator contract.

sale Public Charters, were unnecessary, and we proposed to eliminate those requirements.[7]

Comments on this proposal were filed by several air carriers, charter operators, travel agent associations, and banks. Most of the direct air carriers agreed with the proposal that financial security arrangements should no longer be imposed on direct air carriers since airlines conducting charters are subject to the same fitness requirements as those operating scheduled flights; indeed, many carriers that operate charters also provide scheduled service. Moreover, scheduled flights are not subject to any such financial security requirements. These carriers also stated that the current security requirements are costly restrictions that produce little, if any, benefit while placing charter operations at a competitive disadvantage to scheduled service.

The proposed rule change was opposed by one air carrier, several charter operations, two travel agent associations, the banks, and most of the individuals filing comments, citing airline liquidations and bankruptcies in recent years and the apprehension they assert will be felt by charter operators who will be hesitant to take a chance on new entrants in the industry without the financial controls that are now in place. One commenter stated that more and more charter flights are being provided by new entrant U.S. and foreign carriers and that, since these carriers are the leading edge of competition in charter markets, it would be counterproductive to adopt a charter rule that has the effect of reducing their access to charter traffic. Another commenter stated that charter deposits transferred to direct air carriers represent relatively large sums of money in a single transaction with transfers made shortly before the flight operates, and it is not unreasonable, in these circumstances, for the direct air carrier to continue to provide depository protection for these sums, which have been afforded such protection while in the hands of the charter operator. Another commenter cited its concern that participants could claim against a charter operator's security agreement if they do not receive the charter trips they have purchased even though the charter operator had paid the direct air carrier.

We will continue to require direct air carriers to maintain a surety or escrow account for the protection of customer payments for charter flights that they operate. Our decision to retain this requirement is premised, in part, on our view that even though such carriers have been subjected to a ''fitness'' evaluation by the Department, the charter participants' funds should continue to be protected after leaving the security of the charter operator's escrow account and until the charter participant has received the service that was promised. Moreover, in the event of a stranding, charter participants are less likely than scheduled passengers to be carried by other airlines or to benefit from ticketing procedures common among scheduled carriers (e.g., where travel on a defaulting airline is via a ticket issued by another carrier, or vice-versa).

(5) Direct Air Carrier Responsibilities

Under the proposed rules, direct air carriers would be responsible, as they currently are, for ensuring that any charter they conduct meets the requirements of the charter rules—that is, they would have to take reasonable steps to verify that the Public Charter operators with which they contract meet the registration and financial security requirements of Part 380, and single entity or affinity charters meet the definitional requirements for those charter types (proposed §§ 212.30(d) and 212.5(f)). Direct air carriers would be free to establish whatever contractual requirements they deemed necessary in order to ensure compliance with the rules. Direct air carriers would also be responsible, as they have been in the past, for providing return transportation to any charter participant who has purchased round-trip transportation and whom they transported on an outbound flight, unless that charter participant's return flight is covered by a contract with another direct air carrier (proposed § 212.3(e)). We also proposed to add a provision to Part 380 (proposed § 380.10) to state that, should the direct air carrier fail to make a ''reasonable effort'' to verify that the Public Charter operator had met the Department's financial security requirements, that air carrier would bear the responsibility to provide the charter transportation or refund the air transportation portion of the charter participant payments in the event of the charter operator's failure to do so.

The inclusion of the requirement to provide return transportation was opposed by several direct air carriers and charter operators, principally because the NPRM had proposed to eliminate prepayment requirements that are a part of current regulations (§§ 207.13(b), 208.32(e), 212.8(a), 380.11) for both the outbound and return leg of charter round trips. The commenters stated that these prepayment rules worked as a mechanism to ensure that the direct air carrier would have the funds to either compensate the charter participants or cover the cost of transportation and that, without payments from the charter operator to cover the flights, the direct air carrier would have to endure a significant financial burden for which it was not responsible. One commenter proposed that the rule be revised to limit the direct air carrier's responsibility to the funds it had received from the charter operator to pay for the return leg. While the air carrier can always require the charter operator to pay the full price of the flight up front as a contractual matter, we agree that the rules should retain the prepayment requirements and the carrier will be responsible for the return air transportation of all round-trip Public Charter participants that it carries outbound, as in the current rule. This rule was written to protect the charter participants by ensuring that the charter operator had not only engaged the services of an air carrier but had also paid for the flight. We will retain the prepayment requirements of Parts 207, 208, 212, and § 380.11.

Comments were also received from a number of direct air carriers arguing that the refund-or-provision-of-transportation requirement proposed in new § 380.10 is an unfair and unworkable expansion of the ''reasonable effort'' concept of the current rules (§ 380.40). One carrier stated that this requirement would make the direct air carrier both the regulator and the guarantor of a charter operator and would ''reformulate the nature of charter transportation. Recasting the carrier as the overseer of the charter operator would fundamentally change what has been understood to be a supplier-purchaser relationship.'' Several commenters view the NPRM language as a wholesale shift of responsibilities away from the charter operator, and argue that such shifting of the risk for charter operator performance to the direct air carrier will place greater financial pressure on the direct air carrier which, in turn, will make charter activities less attractive. The Department's rational that such a rule would minimize government oversight of the charter industry and help protect charter participants is a worthy goal, say the commenters, but the way to achieve it is not by handing the enforcement role over to the airlines. Several commenters stated that they should be given an explanation of what constitutes

[7] U.S. and Canadian air taxi operators that perform Public Charters are also subject to the financial security requirements applicable to direct air carriers. Under the proposed rule, those requirements, contained in §§ 298.38 and 294.32, would also have been eliminated.

''reasonable effort'' so they will be on notice as to what is expect of them. Others suggested that charter operators should be required to give the direct air carriers a certification of compliance with Department regulations, and that should be sufficient to satisfy this requirement.

We appreciate the concern of those many commenters who feel that § 380.10 as proposed might be an expansion of direct carrier responsibility. Direct air carriers have long been responsible under present § 380.40 for ensuring that charter operators comply with all the requirements of our Public Charter rules. Indeed, our Office of Aviation Enforcement and Proceedings has not hesitated to pursue direct carriers for violating this provision.[8] Nevertheless, we recognize that each situation involving a charter problem presents a different set for circumstances, and the fact that a problem occurs may not be causally related to a failure by a direct air carrier to have ensured compliance with Part 380. It was not our intent in proposing the language in the NPRM to make direct air carriers the guarantors of charter operations. Our intent was merely to clarify a significant obligation of direct air carriers that has for years been impressed upon them as a part of our charter enforcement policy. Upon reflection, we recognize that the present language under § 380.40 is understood and appropriate and we will make no changes. Accordingly, we are omitting this proposed section 380.10 from the final rule and will retain the language of § 380.40 in its present form. We emphasize to direct air carriers, however, that in doing so we are not diluting to any degree their long-standing obligation to ensure that charter operators comply with Part 380. Nor are we indicating any lessened resolve on our part to enforce this requirement to the extent necessary to ensure that consumers are not harmed.

Based on the number of comments received on this point, we recognize that the term ''reasonable effort'' may require further clarification. At a minimum, we would expect direct air carriers to verify that the Public Charter operators with whom they contract have filed with the Department a prospectus (that has been accepted)—they can accomplish this by contacting the Department's Special Authorities Division directly—and that they have, in fact, entered into a security arrangement in an amount sufficient to meet the requirements of our rules—they can accomplish this by contacting the named securer/escrow bank.[9]

(6) Use of Credit Cards for Payments to Charter Operators

The Public Charter (Part 380) was developed to protect the public by assuring that the individual participant receives the air flight and accommodations contracted for and that all payments to the charter operator are securely held and properly used. Among other provisions, Part 380 requires that each operator provide a security arrangement based on its total cost of the flights in its charter program or both a bank depository account (escrow account) and a $10,000 per flight security arrangement. Most operators choose the escrow account/security arrangement combination. When the depository/security combination is used, payments to the charter operator from or on behalf of charter participants must be in the form of a check or money order made payable to the bank in which the escrow account is located. In practice, checks not so payable are endorsed over and deposited into the escrow account. The bank then disburses the money to the direct air carrier and, thereafter in some circumstances, to providers of non-air arrangements that are part of the Public Charter package. This check or money order payment required was put in place long before credit cards became a preferred form of payment for charter service. The NPRM pointed out that the restriction in the rule against credit card payments is inconsistent with the reality of today's marketplace and denies consumers additional protections that may be gained when they use credit cards to pay for goods and services. For example, if services are not received or there is a problem, the consumer may not be required to pay a remaining amount and may even get a refund. The NPRM supported the view that many consumers prefer to use credit cards and charter operators can also benefit by offering the additional flexibility to the customer. The NPRM also noted that for years the Enforcement Office has as a matter of enforcement policy permitted charter operators to accept payment by credit card so long as certain consumer protection conditions are met.

Virtually all the commenters supported the rule change to allow direct credit card sales for Public Charters. Based on the comments and recent experience, the Department has decided to allow charter operators with depository accounts [10] to accept payment by credit card from charter participants into those accounts. If the credit card merchant account is separate from the depository account, it must be used solely as a conduit with all credit card payments toward Public Charter trips immediately remitted to the depository account in full, without holdback. If a separate bank is to be used as a conduit for the receipt of credit card payments, the Department must be satisfied that there are adequate procedural safeguards. For example, the Department may require the charter operator to furnish a copy of or certify that there is in place, an agreement between the charter operator and the credit card merchant bank sufficient to preclude participant funds from being held back.

In situations involving direct bookings by telephone, the Department will allow the Public Charter operator to accept credit card payments for its trips provided that the charter operator advises the customers: (1) That he or she has the right to receive the operator-participant contract before making a booking; (2) that the operator-participant contract will be mailed to the participant within 24 hours of accepting payment by credit card; and (3) that the operator-participant contract must be signed, and the signed portion returned to the operator, before travel. While the operator is free to establish a deadline for participants who pay by credit card to sign and return the contract, a full refund must be made of any amounts charged to a credit card for any participant who cancels before the operator-participant contract is signed.

(7) Other Matters

Minimum contract size and advance purchase requirements. Many commenters expressly supported our proposal to eliminate the 20-seat minimum contract size for less-than-planeload charters, and the 7-day advance purchase requirement for Public Charters sold directly to the public by direct air carriers or affiliated charterers. Several, however, expressed concern that the absence of these provisions could lead to abuse, especially in some international markets. One stated that, in cases where the United States has a restrictive scheduled and a liberal charter relationship with a foreign government, carriers could, absent the current minimum contract size and advance

[8] See Order 92–2–1, January 2, 1992 (America West); Order 92–4–50, April 28, 1992 (Mark Air); Order 92–6–17, June 11, 1992 (Faucett); and Order 94–3–34, March 21, 1994 (Express One).

[9] See also n.3, *supra.*

[10] Public Charter operators with bonds equaling their total flight costs (or multiples thereof for trips exceeding 14 days) have always been permitted to accept payment in any form.

purchase rules, set up basically unrestricted direct sale charters to circumvent scheduled route or capacity limitations. This commenter and one other felt that retention of these kinds of restrictions on charters would help prevent the undermining of bilateral scheduled service regimes by charter operations. Another commenter expressed concern that carriers might sell individual seats on charters without complying with the requirements of our Public Charter rules.

We have decided to eliminate the minimum contract size and advance purchase rules, as we proposed to do. We recognize the concerns raised by the commenters over the possible implications of this change in some international markets, but we find that these concerns do not warrant our retention of these restrictive provisions. Significantly, as we noted in the NPRM, the final rule will allow the Department to limit or prohibit the operation of direct sale Public Charters by a foreign air carrier if we find that such action is necessary in the public interest. Thus, we have ample ability to redress problems that might arise, should such action prove necessary. Furthermore, we believe that the rule as adopted makes it clear that any sale by a direct air carrier of an individual charter seat to the public must be done under the direct sale provisions of Part 380.

Additional information with charter operator registrations. Several commenters proposed that we require additional information from Public Charter operators at the time of their registration under the proposed filing system. Three commenters suggested that operators be required to file a copy of their promotional material showing flight schedules to be operated. Another suggested that operators be required to provide a copy of the contract of carriage they would enter into with their charter participants. A third suggested that operators be required to file a certification of any complaints made against them by state or local consumer agencies.

We will not adopt these suggestions. With respect to the filing of promotional material with flight schedules, the current prospectus filing requirement includes flight schedules, and, as is now the case, we will request copies of advertisements when appropriate. The other two suggestions, for charter operators to file copies of their operator-participant contracts, and certifications of complaints, are not required under our current rules, and we see no public interest reason to impose these burdens as a part of this proceeding.

We will, however, amend the rule with respect to the information required to be filed on the ownership of the charter operator (Part 380, Subpart E—Registration of Foreign Charter Operators) to replace the reference in the proposed rule to ''stockholders'' holding 10 percent or more of the company's stock with ''persons'' owning 10 percent or more of the company, since the proposed rule did not take into account the fact that many charter operators may be sole proprietorships or partnerships that do not have stockholders. Moreover, in order to accurately determine the citizenship of the charter operator, we will require that, if any such persons are themselves organizations or corporations, the 10 percent owners of those companies must also be identified back through the company's structure to individual persons who own stock in the ultimate ''parent'' company of the charter operator. Requiring such information is also consistent with our procedures in reviewing the ownership structure of direct air carriers.

Filing of claims against Public Charter operators and securers, and payment of claims. Three commenters suggested shortening the provision in proposed § 380.6(d) that allows Public Charter participants 60 days after the termination of a flight to make a claim against the Public Charter operator (this requirement is contained in current § 380.34(d)). The commenters argued that retaining the 60-day claim period requires operators to maintain expensive security instruments for this period, and that there is no need for such a long period since charter participants will know no later than upon returning from their Public Charter whether their payments were lost in progress to the providers of services—most commonly airlines and hotel operators—or that refunds are due under the operator-participant contract, e.g., for a flight cancellation or other major change requiring a partial or full refund.

Another commenter urged a requirement that claims against a security instrument be paid within 45 days of their submission.

We will not adopt these suggestions. With respect to the 60-day claim period, we note that while in some cases a Public Charter participant will immediately know of the need to submit a written claim, there are other instances, such as a delay in obtaining a promised refund from a charter operator, where the charter participant may not realize this need until well into the claim period. The 60-day claim period has been a part of our charter regulations for many years, and has, we believe, worked well in providing charter participants sufficient time to seek redress of problems they have encountered on Public Charters. We find no public interest reason to modify this provision at this time.

With respect to requiring the payment of claims within 45 days, we do not believe that such a condition is warranted. The resolution of claims can, in some cases, be a complex, time-consuming process, involving negotiations between and among the charter participant, the charter operator, and the securer, and at times the use of the courts. Mandating a 45-day period for claim resolution could be disruptive to this process, to the detriment of all parties. In any event, should a charter operator unreasonably delay the resolution of a claim, such that its action represented an unfair or deceptive practice within the meaning of 49 U.S.C. 41712, it would be subject to enforcement action by the Department.

Payment of claims under security agreement. One commenter objected to proposed § 380.6(a)(1), which pertains to payments by a securer to charter participants with claims against the charter operator's security agreement, because it would permit the entity providing the security to make payment to claimants without the charter operator's agreement or a judgment from an appropriate court of law. The portion of the rule of concern to the commenter states that the securer shall pay a claimant where it ''is determined by the person providing the security or adjudged by a court of competent jurisdiction'' that payment is due to a claimant. The basis for the objection is the commenter's concern that the securer will have no incentive to deny even the most frivolous of claims filed against the security agreement, since any amounts it pays out to claimants will be recoverable from the charter operator's collateral that secures the agreement.

The security agreement is intended to compensate consumers for claims incurred under the operator-participant contract, as a result of flight cancellations, and/or for major changes not accepted by the participant, in all cases in which the participant has not received an appropriate refund. That compensation should be provided as soon as practicable. To require in all cases the approval of the charter operator or a court judgment prior to payment could unnecessarily delay compensation from being made for legitimate claims. We do not share the commenter's concern that a securer

could feel free to make payments to claimants without concern for the actual legitimacy of their claims, since in doing so it would, at a minimum, risk losing future business and open itself to potential liability to the charter operator. It is our intent that securers approach such matters using a ''reasonableness'' standard, and give consideration to all facts surrounding the flight cancellation or other problem that gave rise to the claim. So long as the charter operator is available, we would expect the charter operator to be given a reasonable opportunity to comment before the securer makes payments. We will adopt the rule as proposed, since it will benefit consumers who experience problems for which the charter operator has failed to provide timely compensation.

Flight delays and substitute air transportation. One commenter urged that we retain the current requirements in §§ 208.32a and 208.33 that require charter air carriers to take certain action in the event of flight delays of specific periods. Under these regulations, charter air carriers in some instances provide substitute air transportation for the charter passengers involved, and in some instances provide payment for incidental expenses including food and lodging to the passengers affected. The commenter stated that, absent this requirement, the charter operator would bear the costs involved in these situations, and those costs would be especially burdensome on small charter operators. We will not retain this requirement. The flight delay requirements at issue here currently apply only to U.S. charter-only direct air carriers; they do not apply to the charter operations of U.S. scheduled carriers or foreign air carriers. We see no reason to continue these 30-year old requirements solely for one class of air carrier, when the majority of carriers are not subject to the rules. As we stated in the NPRM, both direct air carriers and charter operators have a commercial interest in providing amenities and/or alternate transportation for passengers when charter flights are delayed. To the extent that a charter operator is concerned about the costs it may incur in dealing with a possible flight delay, its proper forum for dealing with that concern is in negotiating the terms of its contract with the direct air carrier.

Subcontracting. One commenter urged the Department to amend its rules to permit a ''primary'' charter operator to contract with and be responsible to the direct carrier for payment for a charter flight and to subcontract seats on the flight to other operators without the need for the latter operators' having contracts with the direct air carrier. Under this proposal, both the ''primary'' and subcontracting charter operators would be registered with the Department. Another commenter urged that we also allow single entity charterers to subcontract seats to other single entity charterers, stating that such a provision would be useful in cases where a direct air carrier preferred to contract with only one charterer.

The Public Charter operator/sub-operator separate filing arrangement has existed informally for many years [11] and we will codify it here. However, we will not adopt the proposal to allow single entity charterers to subcontract seats. The operator/sub-operator concept entails a contract between a Public Charter operator that sells charter flights in its own right (either directly to the public, through its agents, or a combination of both) and a second Public Charter operator that piggy-backs its program onto the program of the primary operator with the primary operator retaining at least as many seats for itself as it has subcontracted to one or more sub-operators.[12] Once the Department has accepted the prospectus, the second Public Charter operator—the sub-operator—may advertise in its own right using its own securer and depository bank. However, subcontracting of single entity charters has never been permitted. Under the single entity concept, passengers may not directly or indirectly pay toward their trips. Although Public Charter operators are themselves indirect air carriers, single entity charterers are not. Alternatives for prospective single entity charterers include using smaller aircraft, special fares of part charters on schedule flights, and split charters—multiple charters on a single charter flight.

Small aircraft operations. One commenter asserted that a clarification is needed in our rules concerning Public Charter operations by operators of small aircraft. It noted that proposed § 380.1 states that the Part applies to air transportation furnished by certificated air carriers or foreign air carriers, but makes no mention of operations by non-certificated air taxi operators or commuter air carriers conducting operations under 14 CFR Part 298. It states that §§ 380.1 and 380.2 of the current rule provide for such operations, and that the definition of ''direct air carrier'' in proposed § 380.2 does include carriers operating under Part 298. The commenter suggests that we amend proposed § 380.1 to provide that the Part applies to air transportation furnished by ''direct air carriers'' which it states will resolve any ambiguity.

We will adopt this suggestion. It was not our intent in issuing the NPRM to remove the current ability of air taxi operators or commuter air carriers to conduct Public Charters under Part 380, and we will make the change in § 380.1 recommended by the commenter.

OMPC's and educational institutions. In the NPRM, we proposed to retain rules providing for the operation of two specialized charter types: Overseas Military Personnel Charters (OMPC's), now contained in 14 CFR Part 372, and charters conducted by educational institutions, now contained in 14 CFR 380.17. However, we specifically requested comments on whether these rules are still needed. We received one comment on each question. An OMPC operator supported continuation of the OMPC rules, stating that Germany, the major market for OMPC's, grants special relief for OMPC operations, in light of their role of providing low-cost transportation for U.S. military and civilian personnel and their families on furlough or authorized leave from an official station in a foreign country. We will retain Part 372 for air carriers to continue to provide this necessary and humanitarian service. A direct air carrier supported continuation of the special provisions in Part 380 for educational institutions, stating that the rules have provided a benefit that should remain available. The occasional use of these special provisions by air carriers assures us that there is a need and we will adopt the proposed

[11] Under 14 CFR 380.30(a), solicitation materials for Public Charters must identify the charter operator and the direct air carrier. Under 14 CFR 380.32(a), operator-participant contracts must state the name and complete mailing address of the charter operator. A sub-operator has its binding commitment for a specific number of seats on Public Charter flights shown in another Public Charter prospectus already filed with (and accepted by) the Department, but also must file its own prospectus and is bound independently by our charter rules. Unlike an agent, for example, a sub-operator advertises and sells as a Public Charter operator using its own escrow bank and security agreement. (Order 87–7–10, July 2, 1987, n. 2 at 3.)

[12] The sub-operator concept was devised as a way for direct air carriers to avoid the downsides of split charters and at the same time to permit multiple Public Charter operators to share a planeload charter contracted by a Public Charter operator. Heretofore, there has been a 20-seat minimum contract size. It has never been intended for use by middlemen brokers selling off most or all of the aircraft to Public Charter operators. Unless the direct air carrier is fully bonded, payments should go from the sub-operator's escrow account to the direct air carrier's escrow account with the primary Public Charter operator responsible for payment of the difference between the amount paid by one or more sub-operators and the amount it has agreed to pay the direct air carrier for the flight. Without a waiver granted upon a showing that it is in the public interest, sub-operator contracts may not exceed half of a planeload charter.

language in new § 380.3(d) concerning charters for educational institutions.

Affinity charter certifications. One commenter expressed concern with the provision in proposed § 212.5(f) that would require direct air carriers conducting affinity (pro rata) charters to obtain, and retain for two years, a certification by the chartering organization that all passengers are eligible for transportation under the rule. The commenter argued that the direct air carrier should not bear the responsibility and burden of obtaining and holding these certifications, but that the charterer should have this responsibility.

We will, however, adopt the provision as proposed. We continue to believe that the responsibility for obtaining and retaining the necessary certification of eligibility for an affinity charter property rests with the direct air carrier involved. Moreover, our proposal represents a significant reduction in the burden on direct air carriers and affinity organizations, since the certification would replace the detailed ''Statement of Supporting Information'' now required. Finally, should a problem arise with an affinity charter, having the certification in the hands of the direct air carrier, rather than with an organization whose identity and location would likely be unknown to us, would assure that we can promptly obtain information on the charter from that carrier.

Long-term wet leases. One commenter recommended that we modify proposed §§ 212.2 and 212.8(a), which would continue the current requirement in §§ 207.1, 207.10, 208.3, and 208.5, that U.S. air carriers conducting wet lease operations (that is, charters involving the lease of aircraft and crew) on behalf of foreign air carriers obtain prior Department approval, in the form of a statement of authorization, for all ''long-term'' wet leases of 60 days' duration or longer. The commenter proposed that the prior approval requirement apply only to wet leases by U.S. air carriers of 120 days or longer, stating that the change would relieve a burden and ''better reflect the realties of the marketplace.''

We will not adopt this suggestion. The purpose of the prior-approval requirement for U.S. air carrier long-term wet leases to foreign air carriers is to enable us to assure that these operations, which, because of their extended duration, may represent a significant benefit to the foreign carrier lessee, are in the public interest. The fact that a U.S. carrier is proposing to conduct the wet lease is a significant consideration, but it is not itself sufficient to meet the public interest test. Other public interest criteria as listed in the rule may figure in our decision. We believe that we need to continue the level of scrutiny of these types of wet lease operations that we have been exercising, and, in the absence of any compelling argument for changing the current provision, we will retain the 60-day threshold in the final rule. We do not believe that retention of this provision will pose a significant burden on U.S. air carriers, as the application process for a statement of authorization is uncomplicated, involving the filing of a minimal amount of information with the Department.

Direct Sales. The NPRM proposed that certificated and foreign air carriers could offer for sale and operate Public Charter flights under Part 380 directly to the public and need not comply with registration requirements or the requirements concerning financial security arrangements. While no comments were received on the proposed elimination of filing requirements for direct sales, the overall tenor of comments submitted was to retain the consumer protection provisions of the rule. We have responded to these public comments by retaining other participant protection elements and will do so for direct sale customers as well. We will, therefore, not adopt the wording of the NPRM but will take this opportunity to rewrite the section to eliminate confusing directions in the old rule.

Miscellanous. Several commenters proposed other changes to the proposed rule, from Federal licensing of Public Charter operators to the enactment of a single charter type to replace affinity, single entity, mixed, and Public Charters. Since these matters are well beyond the scope of this proceeding and have not been adequately justified, we will not address them here.

Effectiveness of the rule. The provisions of this rule will become effective 30 days after publication in the **Federal Register**.

Conclusion

After carefully weighing the comments provided in response to the NPRM, we have decided to adopt the revisions as discussed above.

Regulatory Impact

Excutive Order 12866 and DOT Regulatory Policies and Procedures

This final rule has been evaluated in accordance with existing policies and procedures. Because the requirements contained in this final rule clarify the applicability of the multiple Air Charter regulations to a specific segment of the industry and reduce selected portions of the regulatory burden on these operators, the Department has concluded that this final rule does mot constitute a significant rule under either Executive Order 12866 or DOT's policies and procedures.

Regulatory Flexibility Act

The Regulatory Flexibility Act of 1980 (5 U.S.C. 601 *et seq.* requires a review of rules to assess their impact on small entities. The Department certifies that this final rule does not have a significant economic impact on a substantial number of small entities. The Public Charter industry is composed of approximately 250 charter operators half of which are small commercial enterprises that file for a single flight. The only change these operators will notice in filing a prospectus under the new rule will be the saving of $39 in not having to request a waiver of the 10-day waiting period. The Department has concluded that there are no substantial economic impacts for small units of government, business, or other organizations.

Paperwork Reduction Act

This rule contains information collection requirements that have been submitted to the Office of Management and Budget for approval under the Paperwork Reduction Act (44 U.S.C. 2507 *et seq.).* Collection-of-information requirements include reporting, recordkeeping, notification, and other similar requirements. Persons are not required to respond to a collection of information unless it displays a currently valid OMB control number. We will publish a notice in the **Federal Register** prior to the effective date of this final rule of OMB's decision to approve, modify, or disapprove the information collection requirements. The paperwork burden for the filing of Public Charter prospectuses will not changes as a result of this Final Rule because the applications and amendments must still be prepared and submitted to the Department.

Environmental Impact

The Department has evaluated this final rule in accordance with its procedures for ensuring full consideration of the potential environmental impacts of its actions as required by the National Environmental Policy Act (42 U.S.C. 4321 *et seq.),* other environmental statutes, Executive Orders, and DOT Order 5610.1c. It has

been determined that this final rule does not have any effect on the quality of the environment.

Federalism Implications

The Department has analyzed this rule under the principles and criteria contained in Executive Order 12612 (''Federalism'') and has determined that the rule does not have a substantial effect on the States, on the relationship between the national government and the States, or on the distribution of power and responsibilities among the various levels of government. Thus, in accordance with Executive Order 12612, the rule does not have sufficient federalism implications to warrant the preparation of a federalism assessment.

Unfunded Mandates Reform Act

This rule does not impose any unfunded mandates on State, local, or tribal governments as defined by the Unfunded Mandates Reform Act of 1995 (2 U.S.C. 1532–1538).

Summary of Cost/Benefits

Our analysis of the impact of changes made in the Public Charter rule clearly indicates that the changes are beneficial. Elimination of the 10-day waiting period after filing a prospectus will save the cost of a waiver request. We are also deleting the requirement to file a brief (mini) prospectus by direct air carriers conducting foreign-originating flights for foreign charter operators. And finally, we are consolidating three largely repetitive rules applicable to direct air carriers conducting charter flights.

In order to estimate the cost savings to industry from not requesting a waiver of the 10-day waiting period, we reviewed our 1996 record of filings. We approved nearly 800 prospectus filings during the year, most of which included a filing fee of $39 and an additional $39 for a waiver request. Of the total fees received, $62,400, nearly half would be saved under the new rule. In addition, we received between 700 and 800 waiver requests for amendments to Public Charter prospectuses, changing or eliminating flights. Eliminating filing fees for such amendments should provide an additional cost saving to charter operators of approximately $50,000. Cost savings in time and effort for those filing prospectuses under the new rule will be minimal since the filings and the amendments must still be provided.

In considering the cost savings to airlines conducting foreign originating flights for foreign tour operators we note that many foreign air carriers retain the services of U.S. law firms to provide these documents. Since most foreign air carriers are exempt from out filing fees because of reciprocity agreements with the U.S., the cost savings to the air carriers will be the expense of retaining a law firm to produce and file information heretofore required by Public Charter regulations.

Finally, rewrite of the four principal parts of the Code of Federal Regulations that address passenger air charter operations provides a more condensed and useable reference for the charter industry and for those desiring to engage in Public Charters. Consolidating Parts 207 and 208 into a revised Part 212 has eliminated duplicative wording while retaining these two parts with only an applicability statement to avoid confusion since a number of Department orders now in effect require adherence to the requirements. These and other benefits of this Final Rule which can not be quantified such as eliminating certain waiver requirements, allowing charter operators to accept credit card payments and including current practices concerning amendments to filings, simplifies the process for applications and does so without compromising consumer protection.

List of Subjects in 14 CFR Parts 207, 208, 212, 380

Air Carriers, Air Transportation, Charter Flights, Reporting and recordkeeping requirements, Surety bonds.

1. Part 207 is revised to read as follows:

PART 207—CHARTER TRIPS BY U.S. SCHEDULED AIR CARRIERS

Sec.
207.1 Applicability.
207.2 Terms of service.

Authority: 49 U.S.C. 40101, 40102, 40109, 40113, 41101, 41102, 41103, 41301, 41504, 41702, 41708, 41712, 46101.

§ 207.1 Applicability.

This part establishes the terms, conditions, and limitations applicable to charter air transportation conducted by air carriers holding certificates under 49 U.S.C. 41102 authorizing the operation of scheduled air transportation services.

§ 207.2 Terms of service.

Charter air transportation under this part shall be performed in accordance with the provisions of part 212 of this chapter.

2. Part 208 revised to read as follows:

PART 208—CHARTER TRIPS BY U.S. CHARTER AIR CARRIERS

Sec.
208.1 Applicability.
208.2 Terms of service.

Authority: 49 U.S.C. 40101, 40102, 40109, 40113, 41101, 41102, 41103, 41301, 41504, 41702, 41708, 41712, 46101.

§ 208.1 Applicability.

This part establishes the terms, conditions, and limitations applicable to charter air transportation conducted by air carriers holding certificates under 49 U.S.C. 41102 authorizing the operation of charter air transportation services.

§ 208.2 Terms of service.

Charter air transportation under this part shall be performed in accordance with the provisions of Part 212 of this chapter.

3. Part 212 is revised to read as follows:

PART 212—CHARTER RULES FOR U.S. AND FOREIGN DIRECT AIR CARRIERS

Sec.
212.1 Scope.
212.2 Definitions.
212.3 General provisions.
212.4 Authorized charter types.
212.5 Operation of affinity (pro rata) charters.
212.6 Operation of gambling junket charters.
212.7 Direct sales.
212.8 Protection of customers' payments.
212.9 Prior authorization requirements.
212.10 Application for statement of authorization.
212.11 Issuance of statement of authorization.
212.12 Waiver.

Appendix A—Certificated or Foreign Air Carrier's Surety Bond Under part 212 of the Regulations of the Department of Transportation (14 CFR Part 212)

Appendix B—Certification of Compliance

Authority: 49 U.S.C. 40101, 40102, 40109, 40113, 41101, 41103, 41504, 41702, 41708, 41712, 46101.

§ 212.1 Scope.

This part applies to all charter flights, and all other flights carrying charter passengers or cargo, in interstate and/or foreign air transportation by U.S. certificated air carriers or in foreign air transportation by foreign air carriers. It does not apply to any flights performed by a commuter air carrier, air taxi operator, or certificated air carrier operating ''small aircraft'' under part 298 of this chapter. Nothing in this part gives authority to operate a type or level of service not authorized by certificate, foreign air carrier permit, or exemption, except that a certificated air carrier

authorized to conduct scheduled operations may conduct charter flights, in interstate and/or foreign air transportation, without limitation as to the points served.

§ 212.2 Definitions.

For the purposes of this part:

Affinity (pro rata) charter means a charter arranged by an organization on behalf of its membership, and which meets the requirements of § 212.5.

Certificated air carrier means a U.S. direct air carrier holding a certificate issued under 49 U.S.C. 41102.

Charter flight means a flight operated under the terms of a charter contract between a direct air carrier and its charterer or lessee. It does not include scheduled interstate air transportation, scheduled foreign air transportation, or nonscheduled cargo foreign air transportation, sold on an individually ticketed or individually waybilled basis.

Charter operator means:

(1) A ''Public Charter operator'' as defined in § 380.2 of this chapter, or

(2) An ''Overseas Military Personnel Charter operator'' as defined in § 372.2 of this chapter.

Direct air carrier means a certificated or foreign air carrier that directly engages in the operation of aircraft under a certificate, permit, or exemption issued by the Department.

Fifth freedom charter means a charter flight carrying traffic that originates and terminates in countries other than the carrier's home country, regardless of whether the flight operates via the home country.

Foreign air carrier means a direct air carrier which is not a citizen of the United States as defined in 49 U.S.C. 40102(a) that holds a foreign air carrier permit issued under 49 U.S.C. 41302 or an exemption issued under 49 U.S.C. 40109 authorizing direct foreign air transportation.

Fourth freedom charter means a charter flight carrying traffic that terminates in the carrier's home country having originated in another country.

Gambling junket charter means a charter arranged by a casino, hotel, cruise line, or its agents, the purpose of which is to transport passengers to the casino, hotel, or cruise ship where gambling facilities are available, and which meets the requirements of § 212.6.

Long-term wet lease means a wet lease which either—

(1) Lasts more than 60 days, or

(2) Is part of a series of such leases that amounts to a continuing arrangement lasting more than 60 days.

Mixed charter means a charter, the cost of which is borne partly by the charter participants and partly by the charterer, where all the passengers meet the eligibility requirements for ''affinity (pro rata)'' charters of § 212.5.

Part charter means flight carrying both charter and scheduled passenger traffic.

Single entity charter means a charter the cost of which is borne by the charterer and not by individual passengers, directly or indirectly.

Third freedom charter means a charter flight carrying traffic that originates in the carrier's home country and terminates in another country.

Wet lease means a lease between direct air carriers by which the lessor provides all or part of the capacity of an aircraft, and its crew, including operations where the lessor is conducting services under a blocked space or code-sharing arrangement.

§ 212.3 General provisions.

(a) Certificated and foreign air carriers may conduct charter flights as described in this part, and may carry charter passengers on scheduled flights, or charter cargo on scheduled or nonscheduled flights (or on the main deck or in the belly of passenger charter flights), subject to the requirements of this chapter and any orders of, or specific conditions imposed by, the Department.

(b) Charter flights may be operated on a round-trip or one-way basis, with no minimum group, shipment, or contract size.

(c) Contracts to perform charter flights must be in writing and signed by an authorized representative of the certificated or foreign air carrier and the charterer prior to the operation of the flights involved. The written agreement shall include:

(i) The name and address of either the surety whose bond secures advance charter payments received by the carrier, or of the carrier's depository bank to which checks or money orders for the advance charter payments are to be made payable as escrow holder pending completion of the charter trip; and

(2) A statement that unless the charterer files a claim with the carrier, or, if the carrier is unavailable, with the surety, within 60 days after the cancellation of a charter trip with respect to which the charterer's advance payments are secured by the bond, the surety shall be released from all liability under the bond to such charterer for such trips.

(d) A certificated or foreign air carrier must make a reasonable effort to verify that any charterer with which it contracts, and any charter it conducts, meets the applicable requirements of this chapter.

(e) The certificated or foreign air carriers shall require full payment of the total charter price, including payment for the return portion of a round trip, or the posting of a satisfactory bond for full payment, prior to the commencement of any portion of the air transportation, *provided,* however, that in the case of a passenger charter for less than the entire of an aircraft, the carrier shall require full payment of the total charter price, including payment for the return portion of a round trip, from the charterers not less than 10 days prior to the commencement of any portion of the transportation, and such payment shall not be refundable unless the charter is canceled by the carrier or unless the carrier accepts a substitute charterer for one which has canceled a charter, in which case the amount paid by the latter shall be refunded. For the purpose of this section, payment to the carrier's depository bank, as designated in the charter contract, shall be deemed payment to the carrier.

(f) A certificated or foreign air carrier operating a U.S.-originating passenger charter shall be responsible to return to his or her point of origin any passenger who purchased round trip transportation on that charter and who was transported by that carrier on his or her outbound flight; except that this provision shall not apply in cases where the return transportation is to be provided by another certificated or foreign air carrier.

(g) A certificated or foreign air carrier may not perform any charter flight for which a statement of authorization is required under § 212.9 until one has been granted by the Department. In addition, if a foreign air carrier is required to obtain a statement of authorization under paragraph (e) of that section, neither it, not any charter operator, or any other person shall advertise or sell any passenger charter services except those that have been specifically authorized by the Department.

(h) A certificated air carrier may not operate charters where such operations would result in a substantial change in the scope of its operations within the meaning of part 204 of this chapter.

(i) A certificated air carrier may not limit its baggage liability for interstate charter flights except as set forth in part 254 of this chapter.

(j) A certificated air carrier may not, except as set forth in part 121 of the Federal Aviation Regulations (14 CFR part 121), limit the availability, upon reasonable request, of air transportation and related services to a person who

may require help from another person in expeditiously moving to an emergency exit for evacuation of an aircraft.

(k) A certificated air carrier holding a certificate to conduct only cargo operations may not conduct passenger charters.

(l) A certificated air carrier may not perform any charter in interstate commerce within the State of Alaska.

(m) A foreign air carrier may operate charters in foreign air transportation only to the extent authorized by its foreign air carrier permit under 49 U.S.C. 41302 or exemption authority under 49 U.S.C. 40109, and only to the extent to which such operations are consistent with the provisions of any applicable bilateral aviation undertaking.

§ 212.4 Authorized charter types.

Certificated and foreign air carriers may conduct the following charter types, subject to the provisions of this part:

(a) Affinity (pro rata) charters.

(b) Single entity charters, including:

(1) Wet leases involving the carriage of passengers and/or cargo, provided, that the wet lessee holds appropriate economic authority from the Department to conduct the proposed operations; and

(2) Charters pursuant to contracts with the Department of Defense, provided, that foreign air carriers may conduct charters for the Department of Defense only to the extent that such operations are consistent with the provisions of 49 U.S.C. 40118.

(c) Mixed charters.

(d) Gambling junket charters.

(e) Public Charters in accordance with part 380 of this chapter (including operations by educational institutions as defined in that part).

(f) Overseas military personnel charters in accordance with part 372 of this chapter.

(g) Cargo charters.

§ 212.5 Operation of affinity (pro rata) charters.

An affinity (pro rata) charter operated by a certificated or foreign air carrier must meet the following criteria:

(a) The aircraft must be chartered by an organization, no part of whose business is the formation of groups for transportation or solicitation or sale of transportation services, for the purpose of providing air transportation to its members and their immediate families.

(b) The charter must be organized by the organization itself, or by a person or company who acts not as a principal, but as an agent for the chartering organization or the certificated or foreign air carrier.

(c) No solicitation, sales, or participation may take place beyond the bona fide members of an eligible chartering organization, and their immediate families (spouse, children, and parents). All printed solicitation materials shall contain the following notice in boldface, 10-point or larger type—

Some of the Federal rules that protect against tour changes and loss of passengers' money in publicly sold charters do not apply to this charter flight.

(d) ''Bona fide members'' are members of an organization who: Have not joined the organization merely to travel on a charter flight; and who have been members of the chartering organization for a minimum of six months prior to the date of commencement of the affected flight; *provided*, that the ''six month'' rule does not apply to:

(1) Employees of a single commercial establishment, industrial plant, or government agency, or

(2) Students and employees of a single school.

(e) The charter price due the direct air carrier shall be prorated equally among all the charter passengers, except that children under 12 may be offered discounted or free transportation.

(f) The certificated or foreign air carrier shall make reasonable efforts to assure that passengers transported meet the eligibility requirements of this section. The certificated or foreign air carrier shall also obtain (no later than the date of departure), and maintain for two years, a certification by an authorized representative of the chartering organization that all passengers are eligible for transportation under this section.

§ 212.6 Operation of gambling junket charters.

A gambling junket charter operated by a certificated or foreign air carrier must meet the following criteria:

(a) The aircraft must be chartered by

(1) A casino, hotel, or cruise line duly licensed by the government of any state, territory or possession of the United States, or by a foreign government, or

(2) An agent of such a casino, or cruise line on behalf of that casino, hotel, or cruise line.

(b) The casino, hotel, or cruise line or its agents, may not require a passenger to incur any expense in taking the trip, *provided*, that this provision shall not preclude the casino, hotel, or cruise line or its agents, from requiring prospective passengers to pay nominal reservation fees that are duly refundable by the casino, hotel, or cruise line before the flight, establish a minimum line-of-credit at the casino, hotel, or cruise line, bring (but not necessarily spend) a specified minimum amount of money, or meet other requirements that do not place them in financial jeopardy; nor does it preclude the casino, hotel, or cruise line, or its agents, from offering operational land packages for a fee.

§ 212.7 Direct sales.

(a) Certificated and foreign air carriers may sell or offer for sale, and operate, as principal, Public Charter flights under part 380 of this chapter directly to the public.

(b) Each certificated or foreign air carrier operating a charter trip under this section shall comply with all the requirements of part 380 of this chapter, except that:

(1) Those provisions of part 380 relating to the existence of a contract between a charter operator and a direct air carrier do not apply;

(2) A depository agreement shall comply with § 380.34a (d) and (f);

(3) A security agreement shall comply with § 380.34 (c) and (d); and

(i) If no depository agreement is used, protect charter participant payments (including those for ground accommodations and services) and assure the certificated or foreign air carrier's contractual and regulatory responsibilities to charter participants in an unlimited amount (except that the liability of the securer with respect to any charter participant may be limited to the charter price paid by or on behalf of such participant);

(ii) If used in combination with a depository agreement, protect charter participant payments (including those for ground accommodations and services) and assure the certificated or foreign air carrier's contractual and regulatory responsibilities to charter participants in the amount of at least $10,000 times the number of flights, except that the amount need not be more than $200,000. The liability of the securer with respect to any charter participant may be limited to the charter price paid by or on behalf of such participant.

(c) The Department reserves the right to limit or prohibit the operation of direct sales Public Charters by a foreign air carrier upon a finding that such action is necessary in the public interest.

§ 212.8 Protection of customers' payments.

(a) Except as provided in paragraph (c) of this section, no certificated air carrier or foreign air carrier shall perform any charter trip (other than a cargo charter trip) originating in the United States or any Overseas Military

Personnel Charter trip, as defined in part 372 of this chapter, nor shall such carrier accept any advance payment in connection with any such charter trip, unless there is on file with the Department a copy of a currently effective agreement made between said carrier and a designated bank, by the terms of which all sums payable in advance to the carrier by charterers, in connection with any such trip to be performed by said carrier, shall be deposited with and maintained by the bank, as escrow holder, the agreement to be subject to the following conditions:

(1) The charterer (or its agent) shall pay the carrier either by check or money order made payable to the depository bank. Such check or money order and any cash received by the carrier from a charterer (or its agent) shall be deposited in, or mailed to, the bank no later than the close of the business day following the receipt of the check or money order or the cash, along with a statement showing the name and address of the charterer (or its agent); provided, however, that where the charter transportation to be performed by a carrier is sold through a travel agent, the agent may be authorized by the carrier to deduct its commission and remit the balance of the advance payment to the carrier either by check or money order made payable to the designated bank.

(2) The bank shall pay over to the carrier escrowed funds with respect to a specific charter only after the carrier has certified in writing to the bank that such charter has been completed; provided, however, that the bank may be required by the terms of the agreement to pay over to the carrier a specified portion of such escrowed funds, as payment for the performance of the outbound segment of a round-trip charter upon the carrier's written certification that such segment has been so completed.

(3) Refunds to a charterer from sums in the escrow account shall be paid directly to such charterer its assigns. Upon written certification from the carrier that a charter has been canceled, the bank shall turn over directly to the charterer or its assigns all escrowed sums (less any cancellation penalties as provided in the charter contract) which the bank holds with respect to such canceled charter, provided however, that in the case of a split charter escrowed funds shall be turned over to a charterer or its assigns only if the carrier's written certification of cancellation of such charter includes a specific representation that either the charter has been canceled by the carrier or, if the charter has been canceled by the charterer, that the carrier has accepted a substitute charterer.

(4) The bank shall maintain a separate accounting for each charter flight.

(5) As used in this section the term ''bank'' means a bank insured by the Federal Deposit Insurance Corporation.

(b) The escrow agreement required under paragraph (a) of this section shall not be effective until approved by the Department. Claims against the escrow may be made only with respect to the non-performance of air transportation.

(c) The carrier may elect, in lieu of furnishing an escrow agreement pursuant to paragraph (a) of this section, to furnish and file with the Department a surety bond with guarantees to the United States Government the performance of all charter trips (other than cargo charter trips) originating in the United States and of all overseas military personnel charter trips, as defined in part 372 of this chapter, to be performed, in whole or in part, by such carrier pursuant to any contracts entered into by such carrier. The amount of such bond shall be unlimited.[1] Claims under the bond may be made only with respect to the non-performance of air transportation.

(d) The bond permitted by this section shall be in the form set forth as the appendix to this part. Such bond shall be issued by a bonding or surety company—

(1) Which is listed in Best's Insurance Reports (Fire and Casualty) with a general policyholders' rating of ''A'' or better or

(2) Which is listed in the U.S. Department of Treasury's notice listing companies holding Certificates of Authority as acceptable sureties on Federal bonds and as acceptable reinsuring companies, published in the **Federal Register** on or about July 1. The bonding or surety company shall be one legally authorized to issue bonds of that type in the State in which there is located the office or usual residence of the agency designated by the carrier under 49 U.S.C. 46103 to receive service of notices, process and other documents issued by or filed with the Department of Transportation. For the purposes of this section the term ''State'' includes any territory or possession of the United States, or the District of Columbia. If the bond does not comply with the requirements of this section, or for any reason fails to provide satisfactory or adequate protection for the public, the Department will notify the certificated or foreign air carrier by registered or certified mail, stating the deficiencies of the bond. Unless such deficiencies are corrected within the time limit set forth in the notification, no amounts payable in advance by customers for the subject charter trips shall be accepted by the carrier.

(e) The bond required by this section shall provide that unless the charterer files a claim with the carrier, or, if the carrier is unavailable, with the surety, within 60 days after cancellation of a charter trip with respect to which the charterer's advance payments are secured by the bond, the surety shall be released from all liability under the bond to such charterer for such charter trip. The contract between the carrier and the charterer shall contain notice of this provision.

[1] While the face amount of the bond is unlimited, claims are limited to amounts that are paid to carrier for U.S.-originating passenger charter flights that carrier fails to perform or to refund.

§ 212.9 Prior authorization requirements.

(a) Certificated air carriers shall obtain a statement of authorization for each long-term wet lease to a foreign air carrier.

(b) Foreign air carriers shall obtain a statement of authorization for each:

(1) Fifth freedom charter flight to or from the United States;

(2) Long-term wet lease;

(3) Charter flight for which the Department specifically requires prior authorization under paragraph (e) or (f) of this section; or

(4) Part charter.

(c) The Department may issue blanket statements of authorization to foreign air carriers to conduct fifth freedom charters. The standards for issuing such blanket authorizations shall be those stated in § 212.11. The Department may revoke any authority granted under this paragraph at any time without hearing.

(d) The Department may at any time, with or without hearing, but with at least 30 days' notice, require a foreign air carrier to obtain a statement of authorization before operating any charter flight. In deciding whether to impose such a requirement, the Department will consider (but not be limited to considering) whether the country of the carrier's nationality:

(1) Requires prior approval for third or fourth freedom charter flights by U.S. air carriers;

(2) Has, over the objection of the U.S. Government, denied rights of a U.S. air carrier guaranteed by a bilateral agreement; or

(3) Has otherwise impaired, limited, or denied the operating rights of U.S. air carriers, or engaged in unfair, discriminatory, or restrictive practices with respect to air transportation services to, from, through, or over its territory.

(e) The Department, in the interest of national security, may require a foreign air carrier to provide prior notification or to obtain a statement of authorization before operating any charter flight over U.S. territory.

§ 212.10 Application for statement of authorization.

(a) Application for a statement of authorization shall be submitted on OST Form 4540 except that for part charters or long-term wet leases the application may be in letter form. An application for a long-term wet lease shall describe the purpose and terms of the wet lease agreement. An original and two copies of an application shall be submitted to the Department of Transportation, Office of International Aviation, U.S. Air Carrier Licensing Division, X–44 (for an application by a certificated air carrier), or Foreign Air Carrier Licensing Division, X–45 (for an application by a foreign air carrier), 400 Seventh Street, SW., Washington, DC 20590. Upon a showing of good cause, the application may be transmitted by facsimile (fax) or telegram, or may be made by telephone, provided, that in the case of a fax or telephone application, the applicant must confirm its request (by filing an original and two copies of its application as described above) within three business days.

(b) A copy of each application for a long-term wet lease shall also be served on the Director of Flight Standards Service (AFS–1), Federal Aviation Administration, 800 Independence Avenue, SW., Washington, DC 20591, and on each certificated air carrier that is authorized to serve the general area in which the proposed transportation is to be performed.

(c)(1) Applicants for statements of authorization filed by foreign air carriers shall include documentation to establish the extent to which the country of the applicant's nationality deals with U.S. air carriers on the basis of reciprocity for similar flights, if such flights are not subject to a bilateral agreement, and

(i) The Department has not established that the country accords reciprocity;

(ii) The Department has found reciprocity defective in the most recent prior approval application involving the country; or

(iii) Changes in reciprocity have occurred since the most recent Department finding for the country in question.

(2) Applications filed by certificated or foreign air carriers to conduct long-term wet leases shall include, for the country of the lessee's nationality, the documentation specified in paragraph (c)(1) of this section.

(d)(1) Applications shall be filed at least 5 business days before commencement of the proposed flight or flights, except as specified in paragraphs (d)(2), (d)(3), and (d)(4) of this section. Late applications may be considered upon a showing of good cause for the lateness.

(2) Applications for a part charter or for a long-term wet lease shall be filed at least 45 calendar days before the date of the first proposed flight.

(3) Applications specifically required under § 212.9(d) shall be filed at least 30 calendar days before the proposed flight or flights (10 calendar days for cargo charters), unless otherwise specified by the Department.

(4) Applications required by a Department order under § 212.9(e) shall be filed at least 14 calendar days before the proposed flight or flights, unless otherwise specified by the Department.

(5) Where an application is required by more than one provision of this part and/or order of the Department, only one application need be filed, but it must conform to the earliest applicable filing deadline.

(6) The Department may require service of applications as it deems necessary.

(e)(1) Any part in interest may file a memorandum supporting or opposing an application. Three copies of each memorandum shall be filed within 7 business days after service of the application or before the date of the proposed flight or flights, whichever is earlier. Memorandums will be considered to the extent practicable; the Department may act on an application without waiting for supporting or opposing memorandums to be filed.

(2) Each memorandum shall set forth the reasons why the application should be granted or denied, accompanied by whatever data, including affidavits, the Department is requested to consider.

(3) A copy of each memorandum shall be served on the certified or foreign air carrier applying for approval.

(f)(1) Unless otherwise ordered by the Department, each application and memorandum filed in response will be available for public inspection at the Office of International Aviation immediately upon filing. Notice of the filing of all applications shall be published in the Department's Weekly List of Applications Filed.

(2) Any person objecting to public disclosure of any information in an application or memorandum must state the grounds for the objection in writing. If the Department finds that disclosure of all or part of the information would adversely affect the objecting person, and that the public interest does not require disclosure, it will order that the injurious information be withheld.

§ 212.11 Issuance of statement of authorization.

(a) The Department will issue a statement of authorization if it finds that the proposed charter flight, part charter, or wet lease meets the requirements of this part and that it is in the public interest. Statements of authorization may be conditioned or limited.

(b) In determining the public interest the Department will consider (but not be limited to) the following factors:

(1) The extent to which the authority sought to covered by and consistent with bilateral agreements to which the United States is a party.

(2) The extent to which an applicant foreign air carrier's home country (and, in the case of a long-term wet lease, the lessee's home country) deals with U.S. air carriers on the basis of substantial reciprocity.

(3) Whether the applicant or its agent has previously violated the provisions of this part.

(4) Where the application concerns a long-term wet lease:

(i) Whether the lessor (applicant) or its agent or the lessee (charterer) or its agent has previously violated the provisions of the Department's charter regulations.

(ii) Whether, because of the nature of the arrangement and the benefits involved, the authority sought should be the subject of a bilateral agreement.

(iii) To what extent the lessor owns and/or controls the lessee, or is owned and/or controlled by the lessee.

(c) The Department will submit any denial of an authorization specifically required of a foreign air carrier under § 212.9(d) to the President of the United States at least 10 days before the proposed departure. The denial will be subject to stay or disapproval by the President within 10 days after it is submitted. A shorter period for Presidential review may be specified by the Department where the application for authorization is not timely or properly filed. Denial of a late-filed application need not be submitted to the President. For the purposes of this paragraph, an application filed by a foreign air carrier under § 212.9(d) to conduct a cargo charter will be considered as timely filed only if it is filed at least 30 calendar days before the proposed flight, notwithstanding the 10-day filing requirement for cargo charters in § 212.10(d)(3).

(d) The Department will publish notice of its actions on applications for

statements of authorization in its Weekly List of Applications Filed. Interested persons may upon request obtain copies of letters of endorsed forms advising applicants of action taken on their applications.

§ 212.12 Waiver.

The Department may grant a waiver of any of the provisions of this part upon a finding that such waiver is in the public interest. A certificated or foreign air carrier may request a waiver by filing a written application with the Department, citing the specific provision to be waived and providing justification for such waiver.

Appendix A—Certificated or Foreign Air Carrier's Surety Bond Under Part 212 of the Regulations of the Department of Transportation (14 CFR Part 212)

Know all persons by these presents, that we _____ (Name of certificated or foreign air carrier) of _____, (City) _____ (State or Country) as Principal (hereinafter called Principal), and _____ (name of Surety) a corporation created and existing under the laws of the State of _____ (State) as Surety (hereinafter called Surety) are held and firmly bound unto the United States of America in an unlimited amount, as required by 14 CFR 212.8, for which payment, well and truly to be made, we bind ourselves and our heirs, executors, administrators, successors, and assigns, jointly and severally, firmly by these presents.

Whereas the principal, a certificated air carrier holding a certificate of public convenience and necessity issued under 49 U.S.C. 41102, or a foreign air carrier holding a foreign air carrier permit issued under 49 U.S.C. 41302 or an exemption issued under 49 U.S.C. 40109 authorizing that foreign air carrier to engage in charter trips in foreign air transportation, is subject to rules and regulations of the Department of Transportation relating to security for the protection of charterers of civil aircraft and has elected to file with the Department of Transportation such a bond as will guarantee to the United States Government the performance of all charter trips (other than cargo charter trips) originating in the United States and of all Overseas Military Personnel Charters, as defined in 14 CFR part 372, to be performed, in whole or in part, by such certificated or foreign air carrier pursuant to contracts entered into by such carrier after the execution date of this bond, and

Whereas this bond is written to assure compliance by the Principal with rules and regulations of the Department of Transportation relating to security for the protection of charterer of civil aircraft for charter trips (other than cargo charters) originating in the United States or of Overseas Military Personnel Charter trips and shall inure to the benefit of any and all such charterers to whom the Principal may be held legally liable for any of the damages herein described.

Now, therefore, the condition of this obligation is such that if the Principal shall pay or cause to be paid to such charterer any sum or sums for which the Principal may be held legally liable by reason of the Principal's failure faithfully to perform, fulfill, and carry out all contracts made by the Principal while this bond is in effect for the performance of charter trips (other than cargo charter trips) originating in the United States and of Overseas Military Personnel Charter trips, then this obligation shall be void, otherwise to remain in full force and effect.

The liability of the Surety shall not be discharged by any payment or succession of payments hereunder in any specified amount. The surety agrees to furnish written notice to the Department of Transportation forthwith of all suits filed, judgments rendered, and payments made by said Surety under this bond.

This bond is effective the _____ day of _____, _____, 12:01 a.m., standard time at the address of the Principal as stated herein and shall continue in force until terminated as hereinafter provided. The Principal or the Surety may at any time terminate this bond by written notice to the Department of Transportation at its office in Washington, D.C., such termination to become effective thirty (30) days after actual receipt of said notice by the Department. The Surety shall not be liable hereunder for the payment of the damages hereinbefore described which arise as the result of any contracts for the performance of air transportation services made by the Principal after the termination of this bond becomes effective, as herein provided, but such termination shall not affect the liability of the Surety hereunder for the payment of any such damages arising as the result of contracts for the performance of air transportation services made by the Principal after the termination of this bond becomes effective. Liability of the Surety under this bond shall in all events be limited only to a charterer who shall within sixty (60) days after the cancellation of a charter trip with respect to which the charterer's advance payments are secured by this bond give written notice of claim to the certificated or foreign air carrier, or, if it is unavailable, to the Surety, and all liability on this bond for such charter trip shall automatically terminate sixty (60) days after the termination date thereof except for claims filed within the time provided herein.

In witness whereof, the said Principal and Surety have executed this instrument on the _____ day of _____, _____.

Principal

Name _____

By: Signature and title _____

Witness _____

Surety

Name _____

By: Signature and title _____

Witness _____

Bonding or surety company must be listed in Best's Insurance Reports (Fire and Casualty) with a general policyholders' rating of ''A'' or better or in the Department of the Treasury listing of companies holding certificates of authority as acceptable sureties on Federal bonds. In addition, the bonding or surety company shall be one legally authorized to issue bonds of that type in the State(s) in which the charter flight(s) originate. Agents must provide satisfactory proof that they have the requisite authority to issue this bond.

Appendix B—Certification of Compliance

Organization Charterworthiness for Affinity Charter Air Transportation and Eligibility of All Prospective Passengers for Such Flights Under Part 212 of the Regulations of the Department of Transportation (14 CFR Part 212)

I declare under penalty of perjury under the laws of the United States of America that the foregoing is true and correct.

4. Part 380 is revised to read as follows:

PART 380—PUBLIC CHARTERS

Subpart A—General Provisions

Sec.
380.1 Applicability.
380.2 Definitions.
380.3 General provisions.
380.4 Enforcement.

Subpart B—Conditions and Limitations

380.10 Public Charter requirements.
380.11 Payment to direct air carrier(s).
380.12 Cancellation by charter operator and notice to participants.
380.13 Prohibition on sale of round trips with open returns.
380.14 Unused space.
380.15 Substitution for charter participants.
380.17 Charters conducted by educational institutions.

Subpart C—Requirements Applicable to Charter Operators

380.20 Relief from the Statute.
380.21 380.23 [Reserved]
380.24 Suspension of exemption authority.
380.25 Prospectus filing and related requirements.
380.26 Discrimination.
380.27 Methods of competition.
380.28 Charter prospectus.
380.29 Charter contract.
380.30 Solicitation materials.
380.31 General requirements for operator-participant contracts.
380.32 Specific requirements for operator-participant contracts.
380.33 Major changes in itinerary or price; refunds.
380.33a Operator's option plan.
380.34 Security and depository agreements.
380.34a Substitution of direct air carrier's security or depository agreement.
380.35 Disbursements from depository account.
380.36 Record retention.

Subpart D—Requirements Applicable to Direct Air Carriers

380.40 Charter not to be performed unless in compliance with this part 380.
380.41 380.42 [Reserved]
380.43 Cancellations by direct air carriers.

380.45 Suspension of exemption authority.
380.46 Charter trip reporting.

Subpart E—Registration of Foreign Charter Operators

380.60 Purpose.
380.61 Operations by foreign charter operators.
380.62 Registration applications.
380.63 Objections to registration applications.
380.64 Department action on a registration application.
380.65 Notification of change of operations or ownership.
380.66 Cancellation or conditioning of the registration.
380.67 Waiver of sovereign immunity.
Appendix A—Public Charter Operator's Surety Bond Under Part 380 of the Special Regulations of the Department of Transportation (14 CFR Part 380)
Appendix B Public Charter Surety Trust Agreement

Authority: 49 U.S.C. 40101, 40102, 40109, 40113, 41101, 41103, 41301, 41504, 41702, 41708, 41712, 46101.

Subpart A—General Provisions

§ 380.1 Applicability.

This part applies to Public Charter air transportation of passengers in interstate or foreign air transportation, whether furnished by direct air carriers or Public Charter operators. This part also relieves such charter operators from various provisions of subtitle VII of Title 49 of the United States Code (statute), formerly Title IV of the Federal Aviation Act of 1958, as amended, for the purpose of enabling them to provide Public Charters utilizing aircraft chartered from such direct air carriers. It also declines jurisdiction over foreign Public Charter operators operating foreign-originating Public Charters.

§ 380.2 Definitions.

For the purposes of this part:

Certificated air carrier means a U.S. direct air carrier holding a certificate issued under the statute.

Charter flight means a flight operated under the terms of a charter contract between a direct air carrier and its customer. It does not include scheduled air transportation, scheduled foreign air transportation, or nonscheduled cargo air transportation, sold on an individually ticketed or individually waybilled basis.

Direct air carrier means a certificated or foreign air carrier, or an air taxi operator or commuter air carrier registered under part 298 of this chapter, or a Canadian charter air taxi operator registered under part 294 of this chapter, that directly engages in the operation of aircraft under a certificate, permit or exemption issued by the Department.

Educational institution means a school that is operated as such on a year-round basis and is empowered to grant academic degrees or secondary school diplomas by any government in the United States or by a foreign government.

Foreign air carrier means a direct air carrier that holds a foreign air carrier permit issued under the statute or an exemption issued under the statute authorizing direct foreign air transportation.

Foreign Public Charter opertor means an indirect air carrier which is not a citizen of the United States as defined in the statute, that is authorized to engage in the formation of groups for transportation on Public Charters in accordance with this part.

Indirect air carrier means any person who undertakes to engage indirectly in air transportation operations and who uses for such transportation the services of a direct air carrier.

Public Charter means a one-way or round-trip charter flight to be performed by one or more direct air carriers that is arranged and sponsored by a charter operator.

Public Charter operator means a U.S. or foreign Public Charter operator.

Security agreement means:

(1) A surety bond issued by a company—

(i) That is listed in the Best's Insurance Reports (Fire and Casualty) with a general policyholders' rating of ''A'' or better, or

(ii) That is listed in the U.S. Department of Treasury's notice listing companies holding Certificates of Authority as acceptable sureties on Federal bonds and as acceptable reinsuring companies, published in the **Federal Register** in the first week in July; or

(2) A Surety trust agreement or a letter-of-credit, issued by a Federal Deposit Insurance Corporation-insured financial institution, which provides substantially equivalent protection.

Statute means Subtitle VII of Title 49 of the United States Code (Transportation).

Sub-operator means a Public Charter operator that has contracted for its charter seats from a Public Charter operator that has contracted from one or more direct air carriers. A sub-operator is itself an indirect air carrier, not an agent of the Public Charter operator from which it has obtained its seat.

U.S. Public Charter operator means an indirect air carrier that is a citizen of the United States as defined in 49 U.S.C. 40102(a) and that is authorized to engage in the formation of groups for transportation on Public Charters in accordance with this part.

§ 380.3 General provisions.

(a) Public Charters may be operated on a one-way or round-trip basis, with no minimum group or contract size. Public Charters may be sold on an air-only basis, or with mandatory or optional land arrangements.

(b) A U.S. Public Charter operator operating a Public Charter which originates in a foreign country shall not be subject to the requirements of §§ 380.25, 380.28, 380.30 and 380.35.

(c) The Department declines to exercise jurisdiction over a foreign Public Charter operator which operates a Public Charter originating in a foreign country, but reserves the right to exercise its jurisdiction over any foreign Public Charter operator at any time its finds that such action is in the public interest.

(d)(1) An educational institution operating a Public Charter need not comply with the financial security requirements of § 380.34 if each student participant in the charter is enrolled in a formal academic course of study outside the United States, sponsored by or in conjunction with that institution, that is of at least four weeks' duration.

(2) The spouse, children, and parents of a student participant may accompany the participant on a charter operated under this section.

(e) The Department, upon application or on its own initiative, may waive any of the provision of this part if it finds such action to be in the public interest.

§ 380.4 Enforcement.

In the case of any violation of the provision of the Statute or of this part, or any other rule, regulations, or order issued under the Statute, the violator may be subject to a proceeding pursuant to the Statute before the Department or a U.S district court, as the case may be, to compel compliance therewith; to civil penalties pursuant to the provisions of the Statute, or to criminal penalties pursuant to the provisions of the Statute, or other lawful sanctions.

Subpart B—Conditions and Limitations

§ 380.10 Public Charter requirements.

Public Charters under this part shall meet the following requirements:

(a)–(b) [Reserved]

(c) If the charter is on a round-trip basis, the departing flight and returning need not be performed by the same direct air carrier.

(d) The air transportation portion of the charter must be performed by direct air carriers that hold authority under

Chapter 411 and 413 of the Statute, or are operating under 14 CFR part 298, except that only U.S. citizen direct air carriers may provide air transportation for operations in interstate air transportation.

§ 380.11 Payment to direct air carrier(s).

Except for air taxi operators and commuter air carriers (which are governed by 14 CFR 298.38) and Canadian charter air taxi operators (which are governed by 14 CFR 294.32), the direct air carrier(s) shall be paid in full for the cost of the charter transportation (for both legs, if a round-trip charter) prior to the scheduled date of flight departure, as provided for in the basic charter regulations applicable to the direct air carrier(s) under part 212 of this chapter.

§ 380.12 Cancellation by charter operator and notice to participants.

(a) The charter operator may not cancel a charter for any reason (including insufficient participation), except for circumstances that make it physically impossible to perform the charter trip, less than 10 days before the scheduled date of departure of the outbound trip.

(b) If the charter operator cancels 10 or more days before the scheduled date of departure, the operator must so notify each participant in writing within 7 days after the cancellation but in any event not less than 10 days before the scheduled departure date of the outbound trip. If a charter is canceled less than 10 days before scheduled departure (i.e., for circumstances that make it physically impossible to perform the charter trip), the operator must get the message to each participant as soon as possible.

§ 380.13 Prohibition on sale of round trips with open returns.

The charter operator shall not accept any participant's payment for return transportation unless the participant has specified a particular return flight.

§ 380.14 Unused space.

Noting contained in this part shall preclude a charter operator from utilizing any unused space on an aircraft by it for a Public Charter for the transportation, on a free or reduced basis, of such charter operator's employees, directors, and officers, and parents and immediate families of such persons.

§ 380.15 Substitution for charter participants.

Subsititues may be arranged for charter participants at any time preceding departure. Participants who provide the charter operator or its sales agent with a substitute participant, or who are substituted for by a participant found by the operator, shall receive a refund of all moneys paid to the operator, except that the operator may reserve the right to retain an administrative fee not to exceed $25 for effecting the substitution.

§ 380.17 Charters conducted by educational institutions.

(a) This section shall apply only to charters conducted by educational institutions for charter groups comprised of bona fide participants in a formal academic course of study abroad which is of at least 4 weeks duration. The charter group may also include a student participant's immediate family (spouse, children, and parents). Except as modified in this section, all terms and conditions of this part applicable to the operation of Public Charters shall apply to charters conducted by educational institutions.

(b) An educational institution conducting such a charter shall submit to the Office of Aviation Analysis, Special Authorities Division, a statement, signed by its president, certifying that it meets the definition of ''educational institution'' set forth in § 380.2.

(c) An educational institution conducting such a charter need not comply with the requirements of §§ 380.25, 380.28, 380.34, and 380.35.

Subpart C—Requirements Applicable to Charter Operators

§ 380.20 Relief from the Statute.

(a) To the extent necessary to permit them to organize and arrange public charters, charter operators and foreign charter operators are hereby relieved from the following provisions of Subtitle VII of Title 49 of the U.S. Code, only if and so long as they comply with the provisions and the conditions imposed by this part:

(1) Chapter 411.

(2) Chapter 413.

(3) Chapter 415.

(4) Chapter 419.

(5) If foreign charter operators receive interstate air transportation rights, any other provision of the statute that would otherwise prohibit them from organizing and arranging Public Charters in interstate air transportation.

(b) A charter operator who is a citizen of the United States shall not be subject to the following requirements with respect to Public Charters that originate in a foreign country: §§ 380.25, 380.28, and 380.30 through 380.35.

§§ 380.21–380.23 [Reserved]

§ 380.24 Suspension of exemption authority.

The Department reserves the power to deny the exemption authority of any charter operator, without hearing, if it finds that such action is necessary in the public interest or is otherwise necessary in order to protect the rights of the traveling public.

§ 380.25 Prospectus filing and related requirements.

A charter operator may organize and operate a Public Charter only in accordance with this part, and subject to the following conditions:

(a) No charter operator shall operate, sell, receive money from any prospective participant for, or offer to sell or otherwise advertise a charter or series of charters until the Office of Aviation Analysis, Special Authorities Division, has accepted a Public Charter prospectus as described in § 380.28.

(b) If within 10 days after the filing the Department notifies the charter operator that it has rejected the prospectus for noncompliance with this part, the prohibitions set forth in paragraph (a) of this section shall continue until the Department advises that it has accepted the prospectus.

(c) The following amendments to a filed prospectus may be made:

(1) The addition or cancellation of any flight;

(2) A change in any flight, date, origin city or destination city; and

(3) A change in or addition of any direct air carrier, securer, or depository bank.

(d) The charter operator shall amend the prospectus to reflect any change described in paragraph (c) of this section. The amendment shall be filed in the manner and form used for the original prospectus. It shall become effective upon filing unless the operator is otherwise notified.

(e) The charter operator shall notify the depository bank (if any) and the securer of any change described in paragraph (c) of this section not later than when filing a prospectus amendment to reflect the change. If the securer is unable to adjust the security agreement as required by the change, the Office of Aviation Analysis, Special Authorities Division shall be advised of this fact within 2 business days.

(Approved by the Office of Management and Budget under Control Number 2106–0005).

§ 380.26 Discrimination.

No charter operator shall make, give, or cause any undue or unreasonable preference or advantage to any

particular person, port, locality, or description of traffic in air transportation in any respect whatsoever, or subject any particular person, port, locality, or description of traffic in air transportation to any unjust discrimination or any undue or unreasonable prejudice or disadvantage in any respect whatsoever.

§ 380.27 Methods of competition.

No charter operator shall engage in unfair or deceptive practices or unfair methods of competition in air transportation or the sale thereof.

§ 380.28 Charter prospectus.

(a) The charter prospectus shall include an original and two copies of the following:

(1) From the charter operator and the direct air carrier:

(i) The proposed flight schedule, listing the origin and destination cities, dates, type of aircraft, number of seats, and charter price for each flight;

(ii) The tour itinerary (if any) including hotels (name and length of stay at each), and other ground accommodations and services; and

(iii) A statement that they have entered into a charter contract that covers the proposed flight schedule, that the contract complies with all applicable Department regulations, and that a copy of the schedule has been sent to the depository bank (if any) and the operator's securer. The schedule shall be identified with a number assigned by the charter operator that does not duplicate any schedule numbers assigned by the operator to other proposed flight schedules. The proposed flight schedule, tour itinerary (if any), and statement shall be filed on OST Form 4532.

(2)(i) From the charter operator and the securer, a statement:

(A) That they have entered into a security agreement covering the proposed flight schedule that complies with § 380.34, including the amount of the coverage, the number assigned to it by the securer, and the amount of any outstanding claims against it, and

(B) That the securer has received a copy of the proposed flight schedule. The statement shall identify the proposed flight schedule by the schedule number assigned by the charter operator in accordance with paragraph (a) of this section. If there are any outstanding claims against the agreement, the charter operator and securer shall also state that they have executed a rider or amendment increasing the coverage by the amount of the claims, or that the securer will separately pay any claims for which it may be liable without impairing the agreement or reducing the amount of its coverage.

(ii) These statements shall be filed an OST Form 4533.

(3) If a depository agreement is used, a statement from the charter operator, the direct air carrier, and the depository bank:

(i) That they have entered into a depository agreement covering the proposed flight schedule that complies with § 380.34, and

(ii) That the bank has received a copy of the proposed flight schedule by the schedule number assigned by the charter operator in accordance with paragraph (a)(1) of this section. This statement shall be filed on OST Form 4534.

(b) Each of the statements described in paragraph (a) of this section shall also include the names and addresses of the parties to it, and the originals shall be signed by those parties.

(c) The prospectus may cover a series of charters performed by one charter operator if the departure of the last charter is not more than one year after the departure of the first.

(d) If the prospectus covers a series of charters and the air transportation will be performed by more than one direct air carrier, the prospectus shall include separate statements in accordance with paragraphs (a)(1) and (a)(3) of this section to cover the flights that will be performed by each direct carrier.

(Approved by the Office of Management and Budget under Control Number 2106–0005).

§ 380.29 Charter contract.

The charter contract between the charter operator or foreign charter operator and the direct air carrier shall evidence a binding commitment on the part of the carrier to furnish the air transportation required for the trip or trips covered by the contract.

§ 380.30 Solicitation materials.

(a) All solicitation materials for a Public Charter shall include the name of the charter operator and the name of the direct air carrier.

(b) Any solicitation material that states a price per passenger shall also include one of the following:

(1) A statement referring to the operator-participant contract for further information about conditions applicable to the charter; or

(2) The full text of the operator-participant contract.

(c) Except as set forth in § 380.33a for operator's option plan contracts, if the charter prospectus names alternative dates or cities, any solicitation material that states a price per passenger shall also state that the actual dates or cities have not yet been selected, if that is the case.

(d) Any solicitation material that names a hotel but does not name every hotel named in the operator-participant contract shall also state that substitutions may be made.

(e) In any solicitation material from a direct air carrier, indirect air carrier, or an agent of either, for a charter, charter tour (*i.e.*, a combination of air transportation and ground accommodations), or a charter tour component (*e.g.*, a hotel stay), any price stated for such charter, tour, or component shall be the entire price to be paid by the participants to the air carrier, or agent, for such charter, tour, or component.

§ 380.31 General requirements for operator-participant contracts.

(a) Except for telephone sales for which payment is made by credit card as described in paragraph (b) of this section, the charter operator shall not accept payment from or on behalf of a prospective participant unless the participant has agreed to the conditions of the charter by signing an operator-participant contract as described in § 380.32. If a member of a group that will travel together pays for the group, that member may sign the contract on behalf of the group.

(b) For telephone sales only, the charter operator may accept payment by credit card without the participant having first signed an operator-participant contract provided that the charter operator first advises the customer:

(1) That he or she has the right to receive the operator-participant contract before making a booking;

(2) That the operator-participant contract will be mailed to the participant within 24 hours of accepting payment by credit card; and

(3) That the operator-participant contract must be signed, and the signed portion returned to the operator, before travel.

(4) A full refund must be made of any amounts charged to a credit card for any participant who cancels before the operator-participant contract is signed.

(c) The contract form may include a space that participants may check to authorize the charter operator to retain their money while attempting to make other arrangements for them if there is no space available on the flight or on specific alternative flights they have requested.

(d) If there is no space available on the flight or specific alternative flights requested by the participant the

operator shall return all the participant's money within 7 days after receiving it unless the participant, in accordance with paragraph (c) of this section, has authorized the operator to retain the payments while the operator attempts to make other arrangements for the participant. If the operator retains the payments while attempting to make other arrangements for the participant, it shall notify the participant of the fact within 7 days after receiving the payments, but in no event later than the departure. For the purpose of the time periods in this paragraph, receipt of money by a travel agent on behalf of a charter operator will not be considered as receipt by the operator.

(e) Except as set forth in § 380.33a for operator's option plan contracts, the operator-participant contract shall not specify alternative dates for the outbound or return flights, or alternative origin or destination cities for any flight leg.

(f) The contract form shall be printed in 7-point or larger type. The statements required by paragraph (a), (f), (h), (l), (r), (s), and (x) of § 380.32 shall be printed so as to contrast with the rest of the contract by the use of bold-faced type, capital letters, or a type size that is at least 50 percent larger than that used for the rest of the contract.

(g) The contract form shall include a space that participants may check to indicate that they wish to be furnished details of trip cancellation, health, and accident insurance.

(h) The contract form shall be designed so as to enable participants to retain a copy of the general terms and conditions after signing it. The specific information supplied by participants (such as choices of dates, cities, or other options) need not be retainable.

§ 380.32 Specific requirements for operator-participant contracts.

Contracts between charter operators and charter participants shall state:

(a) The name and complete mailing address of the charter operator;

(b) The name of the direct air carrier, the dollar amounts of that carrier's liability limitations for participant's baggage, the type and capacity of the aircraft to be used for the flight, and the conditions governing aircraft-equipment substitutions;

(c) The dates of the outbound and return flights;

(d) The origin and destination cities of each flight leg;

(e) The amount and schedule of payments;

(f) If a depository agreement as provided in § 380.34(b) is used: That all checks, money orders, and credit card drafts must be made payable to the escrow account at the depository bank (identifying bank) [1] or, when the charter is sold to the participant by a retail travel agent, checks and money orders may be made payable to the agent, who must in turn make his check payable to the escrow account at the depository bank;

(g) The tour itinerary, if any, including the name and location of the hotels, length of stay at each, and other ground accommodations and services that are part of the tour;

(h) That the charter operator may not cancel the charter less than 10 days before the scheduled departure date, except for circumstances that make it physically impossible to perform the charter tip;

(i) That if a charter is canceled 10 or more days before the scheduled departure date, the operator will notify the participant in writing within 7 days after the cancellation, but in any event at least 10 days before the scheduled departure;

(j) That is a charter is canceled less than 10 days before departure (*i.e.*, for circumstances that make it physically impossible to perform the charter trip), the operator will get the message to the participant as soon as possible;

(k) That if the charter is canceled, a refund will be made to the participant within 14 days after the cancellation;

(l) The right to refunds if the participant changes plans is limited;

(m) The right to refunds if the participant changes plans, including

(1) The right to a full refund, for sales made by credit card, until an operator-participant contract is signed; and

(2) That any participant who wishes to cancel will receive a full refund (less any applicable administrative fee, not to exceed $25) upon providing a substitute participant to the charter operator or its sales agent, or upon being substituted for by a participant found by the charter operator;

(n) The procedure for obtaining the refunds described in paragraph (m) of this section, including that they will be made within 14 days after the cancellation or substitution;

(o) The meaning of ''major change'', as set forth in § 380.33(a);

(p) That if the charter operator knows of a major change 10 or more days before scheduled departure, the operator will notify the participant of the change within 7 days after first knowing of it, but in any event at least 10 days before scheduled departure;

(q) That is the operator first knows of a major change less than 10 days before scheduled departure, the operator will get the message to the participant as soon as possible;

(r) That within 7 days after receiving a pre-departure notification of a major change but in no event later than departure, the participant may cancel, and that a full refund will be made to the participant within 14 days after canceling;

(s) That upon a post-departure notification of a major change, the participant may reject the substituted hotel or the changed date, origin, or destination of a flight leg and be sent, within 14 days after the return date named in the contract, a refund of the portion of his payment allocable to the hotel accommodations or air transportation not provided;

(t) That the participants rights and remedies set forth in the contract, including the procedures for major changes, shall be in addition to any other rights or remedies available under applicable law, although the operator may condition a refund on the participant's waiver of additional remedies;

(u) That trip cancellation, health, and accident insurance is available and that the operator will furnish details of the insurance to participants who check the space provided for this purpose on the contract form;

(v) The name and address of the surety company or bank issuing the security agreement; and that unless the charter participant files a claim with the charter operator or, if he is unavailable, with the securer, within 60 days after termination of the charter, the securer shall be released from all liability under the security agreement to that participant. Termination means the date of arrival (or in the case of a canceled charter, the intended date or arrival) of the return flight. If there is no return flight in a participant's itinerary, termination means the date or intended date of departure of the last flight in the participant's itinerary;

(w) For international flights only: That additional restrictions may be imposed on the flight by the foreign government involved, and that if landing rights are denied by a foreign government the flight will be canceled with a full refund to the participant.

[1] If the credit card merchant account is separate from the depository account, it must be used solely as a conduit, i.e., all credit card payments toward Public Charter trips must be immediately remitted to the depository account in full, without holdback, or retention of any portion of the participant's payment. If the depository bank is not the credit card merchant bank, the Department must be satisfied that there are adequate procedural safeguards for the protection of participants' payments.

This statement need not be included in the contract if—

(1) The prospectus includes a certification by the charter operator and the direct air carrier that landing rights have been obtained from all the foreign governments involved, and

(2) All the foreign governments involved have adopted country-of-origin rules for charterworthiness;

(x) That the charter operator is the principal and is responsible to the participants for all services and accommodations offered in connection with the charter. However, the contract may expressly provide that the charter operator, unless negligent, is not responsible for personal injury or property damage caused by any direct air carrier, hotel or other supplier of services in connection with the charter.

§ 380.33 Major changes in itinerary or price; refunds.

(a) For the purposes of this section, ''major change'' means any of the following:

(1) A change in the departure or return date shown in the operator-participant contract, (or, if the contract states alternative dates, the date designated to the participant by the charter operator in accordance with § 380.33a(b)), unless the change results from a flight delay. In any event, however, a date change that the operator knows of more than 2 days before the scheduled flight date, and any delay of more than 48 hours, will be considered a major change.

(2) A change in the origin or destination city shown in the operator-participant contract for any flight leg (or, if the contract states alternative cities, the city designated to the participant by the operator in accordance with § 380.33a(b)), unless the change affects only the order in which cities named in a tour package are visited.

(3) A substitution of any hotel that is not named in the operator-participant contract; and

(4) A price increase to the participant that occurs 10 or more days before departure and results in an aggregate price increase of more than 10 percent.

(b) The charter operator shall not increase the price to any participant less than 10 days before departure.

(c) The charter operator shall notify all participants of major changes, as required by the operator-participant contracts. This notification shall include the participants' rights to refunds required to be described in the operator-participant contract. The operator shall, if applicable, also notify the participants that the acceptance of a refund constitutes a waiver of their legal rights.

(d) Except as otherwise specified, notifications and refunds required by this part are considered made at the time they are mailed or sent by an equivalent method.

(e) The charter operator shall make all refunds required to be described in the operator-participant contract within the time limits set forth in paragraphs (k), (n), (r), and (s) of § 380.32, as applicable.

§ 380.33a Operator's option plan.

(a) For the purposes of this part, an operator's option plan contract that states alternative dates for the outbound or return flights, or alternative origin or destination cities for any flight leg.

(b) Operator's option plan contracts shall state, in addition to the information required by § 380.32, that the selection of the actual dates or cities, as applicable, is at the charter operator's option and will not entitle the participant to a refund, and that the operator will notify the participant of the actual dates or cities at least 10 days before the earliest of any alternative dates for the outbound flight.

(c) Contract forms for all operator's option plan contracts shall be labeled ''OPERATOR'S OPTION PLAN'' in bold-faced capital letters at least ¼ inch high. The statement required by paragraph (b) of this section and the statement of alternative dates (§ 380.32(c)) or alternative cities (§ 380.32(d)), as applicable, shall be printed so as to contrast with the rest of the contract, as set forth in § 380.31(f).

(d) Any solicitation material that states a price per passenger for an operator's option plan contract shall clearly and conspicuously—

(1) Identify that price as being for the operator's option plan,

(2) Name all the possible dates or cities, as applicable, and

(3) State that the selection of the actual dates or cities is at the charter operator's option.

(e) Charter operators and their agents shall not misrepresent to prospective participants, orally, in solicitation materials, or otherwise, the probability that any particular city or date will be selected from among the alternatives named in an operator's option plan contract.

(f) The charter operator shall notify all participants with operator's option plan contracts of the actual dates or cities, as applicable, as required by contracts.

§ 380.34 Security and depository agreements.

(a) Except as provided in paragraph (b) of this section, the charter operator or foreign charter operator shall furnish a security agreement in an amount for not less than the charter price for the air transportation, if only air transportation is involved, or, if the charter involves land accommodations in addition to air transportation, a security agreement in one of the following amounts dependent upon the length of the charter or series of charters:

(1) For a charter or series of charters of 14 days or less, security in an amount of not less than the charter price for the air transportation to be furnished in connection with such charter or series of charters;

(2) For a charter or series of charters of more than 14 days but less than 28 days security in an amount of not less than twice the charter price; and

(3) For a charter or series of charters of 28 days or more, security in an amount of not less than three times the charter price: Provided, however, That the liability of the securer to any charter participant shall not exceed amounts paid by that participant to the charter operator with respect to the charter.

(b) The direct air carrier and the charter operator or foreign charter operator may elect, in lieu of furnishing a security agreement as provided under paragraph (a) of this section, to comply with the requirements of paragraphs (b)(1) and (b)(2) of this section, as follows:

(1) The charter operator shall furnish a security agreement in an amount of at least $10,000 times the number of flights, except that the amount need not be more than $200,000. The liability of the securer to any charter participant shall not exceed the amount paid by the participant to the charter operator for that charter.

(2) The direct air carrier and charter operator or foreign charter operator shall enter into an agreement with a designated bank, the terms of which shall provide that all payments by charter participants paid to charter operators or foreign charter operators and their retail travel agents shall be deposited with and maintained by the bank subject to the following conditions:

(i) On sales made to charter participants by charter operators or foreign charter operators the participant shall pay by check, money order, or credit card draft payable to the bank;[2] on sales made to charter participants by retail travel agents, the retail travel agent may deduct his commission and remit the balance to the designated bank by check, money order, or electronic transfer: Provided, That the travel agent

[2] See also n.1, *supra*.

agrees in writing with the charter operator or foreign charter operator that if the charter is canceled the travel agent shall remit to the bank the full amount of the commission previously deducted or received within 10 days after receipt of notification of cancellation of the charter; except for the credit card company's usual commission (not to exceed 3 percent), the charter operator shall not permit any portion of a charter participant's payments by credit cared to be ''held back'' by the credit card merchant bank; [3]

(ii) The bank shall pay the direct air carrier the charter price for the transportation not earlier than 60 days (including day of departure) prior to the scheduled day of departure of the originating or returning flight, upon certification of the departure date by the air carrier: Provided, That, in the case of a round trip charter contract to be performed by one carrier, the total round trip charter price shall be paid to the carrier not earlier than 60 days prior to the scheduled day of departure of the originating flight;

(iii) The bank shall reimburse the charter operator or foreign charter operator for refunds made by the latter to the charter participant upon written notification from the charter operator or foreign charter operator;

(iv) If the charter operator, foreign charter operator or the direct air carrier notifies the bank that a charter has been canceled, the bank shall make applicable refunds directly to the charter participants;

(v) After the charter price has been paid in full to the direct air carrier, the bank shall pay funds from the account directly to the hotels, sightseeing enterprises, or other persons or companies furnishing ground accommodations and services, if any, in connection with the charter or series of charters upon presentation to the bank of vendors' bills and upon certification by the charter operator or foreign charter operator of the amounts payable for such ground accommodations and services and the person or companies to whom payment is to be made: Provided, however, That the total amounts paid by the bank pursuant to paragraphs (b)(2) (ii) and (v) of this section shall not exceed either the total cost of the air transportation, or 80 percent of the total deposits received by the bank less any refunds made to charter participants pursuant to paragraphs (b)(2) (ii) and (iv) of this section, whichever is greater;

(vi) As used in this section, the term ''bank'' means a bank insured by the Federal Deposit Insurance Corporation;

(vii) The bank shall maintain a separate accounting for each charter group;

(viii) Notwithstanding any other provisions of this section, the amount of total cash deposits required to be maintained in the depository account of the bank may be reduced by one or both of the following: The amount of the security agreement in the form prescribed in this section in excess of the minimum coverage required by paragraph (b)(1) of this section; an escrow with the designated bank of Federal, State, or municipal bonds or other securities, consisting of certificates of deposit issued by banks having a stated policy of redeeming such certificates before maturity at the request of the holder (subject only to such interest penalties or other conditions as may be required by law), or negotiable securities which are publicly traded on a securities exchange, all such securities to be made payable to the escrow account: Provided, That such other securities shall be substituted in an amount no greater than 80 percent of the total market value of the escrow account at the time of such substitution: And provided, further, That should the market value of such other securities subsequently decrease, from time to time, then additional cash or securities qualified for investment hereunder shall promptly be added to the escrow account, in an amount equal to the amount of such decreased value; and

(ix) Except as provided in paragraph (b)(2)(i), (iii), (iv), (v), and (viii) of this section, the bank shall not pay out any funds from the account prior to 2 banking days after completion of each charter, when the balance in the account shall be paid the charter operator or foreign charter operator, upon certification of the completion date by the direct air carrier: Provided, however, That if the Charter involves air transportation only and the bank has paid the direct air carrier(s) the charter price for the originating flight, and the returning flight if any, and has paid all refunds due to participants, as provided in paragraph (b)(2)(ii) and (iii), respectively, of this section, then the bank may pay the balance in the account to the charter operator upon certification by the direct air carrier performing the originating flight that such flight has in fact departed.

(c)(1) The security agreement required under paragraphs (a) and (b) of this section shall insure the financial responsibility of the charter operator or foreign charter operator and the supplying of the transportation and all other accommodations, services, and facilities in accordance with the contract between the charter operator or foreign charter operator and the charter participants.

(2) The security agreement may be either:

(i) A surety bond in the form set forth as appendix A to this part;

(ii) A surety trust agreement in the form set forth as appendix B to this part; or

(iii) An arrangement with a bank (for instance, a standby letter of credit) that provides protection of charter participants' funds equivalent to or greater than that provided by the Bond in appendix A. An arrangement that furnishes a lesser degree of protection than would be provided under the bond shall be invalid to that extent, and instead the bank, the charter operator or foreign charter operator, and the charter participants shall have the same rights and liabilities as provided under a bond in the form of appendix A. If the arrangement does not give as much protection as a bond against the risk of the charter operator's bankruptcy, the bank shall be liable in the event of bankruptcy to the same extent as if it had entered into a bond.

(3) Any agreement under paragraph (c)(2)(iii) of this section shall include a statement that, in the event that the other provisions of the agreement do not provide protection to charter participants comparable to that provided under a bond in the form of appendix A, the bank shall assume, for the benefit of the charter participants, all the liabilities it would have if it entered into the bond.

(4) The security agreement shall be effective on or before the date the charter prospectus is filed with the Department.

(5) The security agreement shall be specifically identified by the issuing securer with a numbering system so that the Department can identify the security agreement with the specific charter or charters to which it relates. These data may be set forth in an addendum attached to the security agreement, which addendum must be signed by the charter operator or foreign charter operator and the securer.

(6) When security is provided by a surety bond, such bond shall be issued by a bonding or surety company that is listed in Best's Insurance Reports (Fire and Casualty) with a general policyholders' rating of ''A'' or better. The bonding or surety company shall be one legally authorized to issue bonds of that type in the State in which the

[3] ''Holdback'' is an amount in excess of usual commissions that a credit card merchant bank sometimes retains to cover potential charge-backs or other charges.

charter originates. For purposes of this section the term ''State'' includes any territory or possession of the United States, or the District of Columbia.

(7) When security is provided by a security agreement other than a bond, the agreement shall be issued by a national bank complying with the provisions of 12 CFR 7.7010(a), or by a State bank complying with applicable State laws that give authority to issue such agreements, and all such banks must be insured by the Federal Deposit Insurance Corporation.

(d) The security agreement required by this section shall provide that unless the charter participant files a claim with the charter operator or foreign charter operator, or, if it is unavailable, with the securer, within 60 days after termination of the charter, the securer shall be released from all liability under the security agreement to such charter participant. Terminations means the date of arrival (or in the case of a canceled charter, the intended date of arrival) of the return flight. If there is no return flight in a participant's itinerary, termination means the date or intended date of departure of the last flight in the participant's itinerary.

§ 380.34a Substitution of direct air carrier's security or depository agreement.

(a) A direct air carrier may substitute its own security agreement and/or depository arrangements, as specified in this section, for those required of the charter operator under § 380.34, but only for charter trips in which all the air transportation is provided by one direct air carrier. Charter operators are relieved from § 380.34 to the extent that the direct carrier substitutes its own arrangements.

(b) The direct air carrier may substitute its security agreement for all of the arrangements required of the charter operator under § 380.34 (a) or (b). Alternatively, it may substitute its depository agreement for the depository agreement required of the charter operator under § 380.34(b)(2). If the direct carrier substitutes its depository agreement, it may also obtain and substitute a security agreement for the one otherwise required of the charter operator under § 380.34(b)(1). If the direct carrier substitutes its depository agreement only, the charter operator must supply the security agreement required under § 380.34(b)(1).

(c) If the direct carrier substitutes a security agreement for all the charter operator's requirements under § 380.34, the charter operator shall include in the charter prospectus, in place of the information in § 380.28(a)(2) regarding the charter operator's security agreement:

(1) A statement by the direct air carrier on OST Form 4535 that it will take responsibility for all charter participant payments (including those for ground accommodations and services) and for the fulfillment of all the charter operator's contractual and regulatory obligations to the charter participants.

(2) A statement from the direct air carrier and its securer (under § 212.12 of this chapter), OST Form 4533, that they have entered into a security agreement assuring the direct air carrier's responsibilities to charter participants under this section in an unlimited amount (except that the liability of the securer with respect to any charter participant may be limited to the charter price paid by or on behalf of such participant), and that the securer has received a copy of the proposed flight schedule identified by the schedule number assigned by the charter operator under this part.

(d) A substitute depository agreement under this section shall be signed by the direct air carrier, the charter operator, and the depository bank, and shall provide, in addition to existing requirements under § 212.8 of this chapter, that:

(1) Payments by or on behalf of charter participants shall be allocated to the flight accounts matching the participant's itinerary in the following way: Each account shall have allocated to it the charter cost of the participant's air transportation on that flight. The portion of each payment not intended for air transportation services shall be allocated to the account for the return flight in the participant's itinerary. If there is only one flight in the itinerary, the entire payment shall be allocated to that account.

(2) The bank shall pay funds from a flight account directly to the hotels, sightseeing enterprises, or other persons or companies furnishing ground accommodations and services, if any, in connection with the charter flight, upon presentation to the bank of vendor's bills and upon certification by the person who contracted for the ground accommodations or services of the amounts payable and the persons or companies to whom payment is to be made, except that no disbursement shall be made that would reduce the balance in the account below the charter cost of the flight.

(3) On sales made to participants by a person other than a retail travel agent, the participant shall pay by check, money order, or credit card draft payable to the bank. On sales made to participants by a retail travel agent, payments shall be made in the same manner unless the agent deducts its commission and remits the balance to the bank by check, money order, or electronic transfer. The agent may deduct its commission only if it agrees in writing with its principal (the charter operator or direct air carrier, as applicable) that, if the charter is canceled, the agent shall remit to the bank the full amount of the commission previously deducted or received within 10 days after receipt of notification of the cancellation. The depository bank shall pay refunds directly to participants according to the terms of the operator-participant contract and the terms of this part.

(e) If the direct carrier substitutes a security agreement in addition to substituting a depository agreement, the charter prospectus information must include all the information required by paragraphs (c) and (d) of this section, except for the amount of the security agreement. That agreement shall be in an amount of at least $10,000 times the number of flights, except that the amount need not be more than $200,000.

(f) A copy of the depository agreement under paragraph (d) of this section shall be filed with the Department, and it shall not be effective until approved by the Department.

(g) A copy of the security agreement under paragraph (c) or paragraph (e) of this section shall be filed with the Department. It shall insure the financial responsibility of the direct air carrier for supplying the transportation and all other accommodations, services, and facilities in accordance with the contracts between the charter operator and the charter participants. Such security agreement shall meet all the other requirements of § 380.34 (c) and (d).

§ 380.35 Disbursements from depository account.

No charter operator or direct air carrier shall cause its agents or the depository bank to make disbursements or payments from deposits except in accordance with the provisions of this part.

§ 380.36 Record retention.

Every charter operator conducting a charter pursuant to this part shall comply with the applicable record-retention provisions of part 249 of this chapter.

Subpart D—Requirements Applicable to Direct Air Carriers

§ 380.40 Charter not to be performed unless in compliance with this part 380.

(a) For all Public Charters other than foreign-originating charters organized by foreign charter operators: A direct air carrier shall not perform air transportation in connection with such a charter unless it has made a reasonable effort to verify that all provisions of this part have been complied with and that the charter operator's authority under this part has not been suspended by the Department.

(b) For foreign-originating Public Charters organized by foreign charter operators: A direct air carrier shall not perform air transportation in connection with such a charter unless—

(1) The charter is conducted in accordance with subpart B of this part and

(2) The charter operator conforms to all requirements of this part that are applicable to charter operators within the Department's jurisdiction, other than §§ 380.25, 380.28, 380.30 through 380.36, and 380.50.

§§ 380.41–380.42 [Reserved]

§ 380.43 Cancellations by direct air carriers.

The direct air carrier shall not cancel any charter under this part less than 10 days before the scheduled departure date, except for circumstances that make it physically impossible to perform the charter trip.

§ 380.45 Suspension of exemption authority.

The Department reserves the power to suspend the exemption authority of any air carrier, without hearing, if it finds that such action is necessary in order to protect the rights of the traveling public.

§ 380.46 Charter trip reporting.

The direct air carrier shall promptly notify the Office of Aviation Analysis, Special Authorities Division, regarding any charters covered by a prospectus filed under § 380.28 that are later canceled.

Subpart E—Registration of Foreign Charter Operators

§ 380.60 Purpose.

This subpart establishes registration procedures for foreign charter operators intending to engage in the formation of groups for transportation on Public Charters that originate in the United States.

§ 380.61 Operation by foreign charter operators.

(a) Each foreign charter operator shall be registered under this subpart and file a prospectus under § 380.25 before organizing groups for transportation on Public Charters that originate in the United States.

(b) Each foreign charter registered under this subpart shall comply with the other provisions of this part directed to charter operators.

§ 380.62 Registration applications.

(a) To be registered under this subpart, a foreign charter operator shall file two copies of an application for registration with the Office of Aviation Analysis, Special Authorities Division. The Department will list the names and nationalities of all persons applying for registration in its Weekly Summary of Filings.

(b) The application shall be made on OST Form 4530, which can be obtained from the Office of Aviation Analysis, Special Authorities Division.

(c) The applicant shall clearly indicate in its application for registration whether it requests authority to engage in foreign and/or interstate air transportation.

§ 380.63 Objections to registration applications.

Any person objecting to the registration application of a foreign charter operator or to a proposed change in the name or ownership of that operator shall file an objection with the Office of Aviation Analysis, Special Authorities Division, within 28 days after the Department receives the properly completed registration application.

§ 380.64 Department action on a registration application.

(a) After a registration is received, one of the following actions will be taken.

(1) The application will be approved by the stamping of the effective date of registration on OST Form 4530 and returning the duplicate copy of the form to the operator;

(2) Additional information will be requested for the applicant;

(3) The applicant will be notified that its application will require further analysis or procedures, or is being referred to the Department for formal action;

(4)The registration application will be rejected if it does not comply with the filing requirements of this subpart;

(5) The application will be approved subject to such terms, conditions, or limitations as may be required by the public interest; or

(6) The registration application will be rejected for reasons relating to the failure of effective reciprocity or if the Department finds that it would be in the public interest to do so.

(b) One of the actions described in paragraph (a) of this section will normally be taken within 60 days after the registration application is received. The Department will also consider requests for faster action that include a full explanation of the need for expedited action.

§ 308.65 Notification of change of operations or ownership.

(a) Not later than 30 days before any change in its name or address or before a temporary or permanent cessation of operations, each foreign charter operator registered under this subpart shall notify the Office of Aviation Analysis, Special Authorities Division, of the change by resubmitting OST Form 4530.

(b) A foreign charter operator registered under this subpart shall apply for an amendment to that registration not later than 30 days after either of the following events:

(1) A person listed on its existing registration as owning or holding beneficial interest in at least 10 percent of the operator or of the operator's stock reduces its holding to below 10 percent;

(2) A person not listed on the existing registration as owning or holding beneficial interest in at least 10 percent of the operator or of the operator's stock becomes an owner or holder of 10 percent or more of the company or of its stock.

(c) An application for an amendment shall be made by resubmitting OST Form 4530. The existing registration shall remain valid pending Department action on the amendment.

§ 380.66 Cancellation or conditioning of the registration.

The registration of a foreign charter operator may be canceled or subjected to additional terms, conditions, or limitations if any of the following occur:

(a) The operator files a written notice with the Department that it is discontinuing its charter operations;

(b) A substantial ownership interest is acquired by persons who are not citizens of the same country as the registrant; or

(c) The Department finds, after notice and an opportunity for responses, that it is in the public interest to do so. In making this finding, the Department will consider whether effective reciprocity exists between the United States and the government of the foreign charter operator.

§ 380.67 Waiver of sovereign immunity.

By accepting an approved registration form under this subpart, an operator waives any right it may have to assert any defense of sovereign immunity from suit in any proceeding against it, in any court or other tribunal of the United States, that is based upon a claim arising out of operations by the operator under this part.

Appendix A—Public Charter Operator's Surety Bond Under Part 380 of the Special Regulations of the Department of Transportation (14 CFR Part 380)

Know all men by these presents, that we _____ (name of charter operator) of _____, (city) _____ (state or country) as Principal (hereinafter called Principal), and_____ (name of surety) a corporation created and existing under the laws of the State of _____ (State) as Surety (hereinafter called Surety) are held and firmly bound unto the United States of America in the sum of $_____ (see § 380.34(f) of Part 380) for which payment, well and truly to be made, we bind ourselves and our heirs, executors, administrators, successors, and assigns, jointly and severally, firmly by these presents.

Whereas Principal intends to become a Public Charter operator pursuant to the provisions of part 380 of the Department's Special Regulations and other rules and regulations of the Department relating to insurance or other security for the protection of charter participants, and has elected to file with the Department of Transportation such a bond as will insure financial responsibility with respect to all moneys received from charter participants for services in connection with a Public Charter to be operated subject to Part 380 of the Department's Special Regulations in accordance with contracts, agreements, or arrangements therefor, and

Whereas this bond is written to assure compliance by Principal as an authorized charter operator with Part 380 of the Department's Special Regulations, and other rules and regulations of the Department relating to insurance and other security for the protection of charter participants, and shall inure to the benefit of any and all charter participants to whom Principal may be held legally liable for any damages herein described.

Now, therefor, the condition of this obligation is such that if Principal shall pay or cause to be paid to charter participants any sum or sums for which Principal may be held legally liable by reason of Principal's failure faithfully to perform, fulfill and carry out all contracts, agreements, and arrangements made by Principal while this bond is in effect with respect to the receipt of moneys from charter participants, and proper disbursement thereof pursuant to and in accordance with the provisions of Part 380 of the Department's Special Regulations, then this obligation shall be void, otherwise to remain in full force and effect.

The liability of Surety with respect to any charter participant shall not exceed the charter price paid by or on behalf of such participant.

The liability of Surety shall not be discharged by any payment or succession of payments hereunder, unless and until such payment or payments shall amount in the aggregate to the penalty of the bond, but in no event shall Surety's obligation hereunder exceed the amount of said penalty.

Surety agrees to furnish written notice to the Office of Aviation Analysis, Department of Transportation, forthwith of all suits or claims filed and judgments rendered, and payments made by Surety under this bond.

The bond shall cover the following charters:[1]

Surety company's bond No. _____

Date of flight departure _____

Place of flight departure _____

This bond is effective on the _____ day of _____, 12:01 a.m., standard time at the address of Principal as stated herein and as hereinafter provided. Principal or Surety may at any time terminate this bond by written notice to: ''Special Authorities Division (P–57), Office of Aviation Analysis, U.S. Department of Transportation, Washington, DC 20590,'' such termination to become effective thirty (30) days after the actual receipt of said notice by the Department. Surety shall not be liable hereunder for the payment of any damages hereinbefore described which arise as a result of any contracts, agreements, undertakings, or arrangements for the supplying of transportation and other services made by Principal after the termination of this bond as herein provided, but such termination shall not affect the liability of the bond hereunder for the payment of any damages arising as a result of contracts, agreements, or arrangements for the supplying of transportation and other services made by Principal prior to the date that such termination becomes effective. Liability of Surety under this bond shall in all events be limited only to a charter participant or charter participants who shall within sixty (60) days after the termination of the particular charter described herein give written notice of claim to the charter operator or, if it is unavailable, to Surety, and all liability on this bond shall automatically terminate sixty (60) days after the termination date of each particular charter covered by this bond except for claims made in the time provided herein.

In witness whereof, the said Principal and Surety have executed this instrument on the _____ day of _____, _____.

Principal

Name _____

By: Signature and title

Surety

Name _____

By: Signature and title _____

Only corporations may qualify to act as surety and they must meet the requirements set forth in § 380.34(c)(6) of Part 380.

[1] These data may be supplied in addendum attached to the bond.

Appendix B—Public Charter Surety Trust Agreement

This Trust Agreement is entered into between _____ (charter operator) incorporated under the law of _____ with the principal place of business being _____ (hereinafter referred to as the Operator), and _____ (Bank) with its principal place of business being _____ (hereinafter referred to as the ''Trustee''), for the purpose of creating a trust to become effective as of the _____ day of _____, _____, which trust shall continue until terminated as hereinafter provided.

The Operator intends to become a Public Charter operator pursuant to the provisions of Part 380 of the Department's Special Regulations and other rules and regulations of the Department relating to insurance or other security for the protection of charter participants, and has elected to file with the Department of Transportation such a Surety Trust Agreements as will insure financial responsibility with respect to all moneys received from charter participants for services in connection with a Public Charter to be operated subject to Part 380 of the Department's Special Regulations in accordance with contracts, agreements, or arrangements therefor.

This Surety Trust Agreement is written to assure compliance by the Operator with the provisions of Part 380 of the Department's Special Regulations and other rules and regulations of the Department relating to insurance or other security for the protection of charter participants.

It shall inure to the benefit of any and all charter participants to whom the Operator may be held legally liable for any of the damages herein described.

It is mutually agreed by and between the operator and Trustee that the Trustee shall manage the corpus of the trust and carry out the purposes of the trust as hereinafter set forth during the term of the trust for the benefit of charter participants (who are hereinafter referred to as ''Beneficiaries.'')

Beneficiaries of the trust created by this Agreement shall be limited to those charter participants who meet the following requirements:

1. Those for whom Operator or Operator's agent has received payment toward participation in one or more charters operated by or proposed to be operated by Operator.

2. Who have legal claim or claims for money damages against the Operator by reason of the Operators' failure faithfully to perform, fulfill, and carry out all contracts, agreements, and arrangements made by the Operator while this trust is in respect to the receipt of moneys and proper disbursement thereof pursuant to Part 380 of the Department's Special Regulations; and

3. Who have given notice of such claim or claims in accordance with this Trust Agreement, but who have not been paid by the Operator.

The Operator shall convey to the Trustee legal title to the trust corpus, which has a value of $_____ by the time of the execution of this Agreement.

Trustee shall assume the responsibilities of the Trustee over the said trust corpus and shall distribute from the trust corpus to any and all Beneficiaries to whom the Operator, in its capacity as a Public Charter operator, may be held legally liable by reason of the Operator's failure faithfully to perform, fulfill, and carry out all contracts, agreements, and arrangements made by the Operator, while this trust is in effect with respect to the receipt of moneys and proper disbursement thereof pursuant to Part 380 of the Department's Special Regulations in connection with said charters, such damages as will discharge such liability while this trust is in effect; Provided, however, That the liability of the trust to any Beneficiary shall not exceed the charter price (as defined in Part 380 of the Department's Special Regulations) paid by or on behalf on any such Beneficiary; Provided, further, That there shall be on obligation of the trust to any Beneficiary if the Operator shall pay or cause to be paid to any Beneficiary any sum or sums for which the Operator may be held legally liable by reasons of its failure faithfully to perform, fulfill, and carry out all contracts, agreements, and arrangements made by the Operator in its capacity as charter operator while this trust is in effect with respect to the receipt of moneys and proper disbursement thereof pursuant to Part 380 of the Department's Special Regulations; And provided still further, That the liability of the trust as administered by the Trustee shall not be discharged by any payment or succession of payments hereunder, unless and until such payment or payments, shall amount in the aggregate to $_____. Notwithstanding anything herein to the contrary, in no event shall the obligation of the trust or the Trustee hereunder exceed the aggregate amount of $_____.

The Trustee agrees to furnish written notice to the Office of Aviation Analysis, Department of Transportation, forthwith of all suits of claims filed and judgments rendered (of which it has knowledge), and of payments made by the Trustee under the terms of this trust.

The Trust shall not be liable hereunder for the payment of any damages hereinbefore described which arise as a result of any contracts, agreements, undertakings, or arrangements for the supplying of transportation and other services made by the Operator after the termination of this trust as herein provided, but such termination shall not affect the liability of the trust hereunder for the payment of any damages arising as a result of contracts, agreements, or arrangements for the supplying of transportation and other services made by the Operator prior to the date that such termination becomes effective.

Liability of the trust shall in all events be limited only to a Beneficiary or Beneficiaries who shall within sixty days after the termination of the particular charter give written notice of claim to the Operator or, if it is unavailable, to the Trustee, and all liability of the trust with respect to participants in a charter shall automatically terminate sixty days after the termination date of each particular charter covered by this trust except for claims filed in the time provided herein. Sixty-one days after the completion of the last charter covered by this Trust Agreement, the trust shall automatically terminate except for claims of any Beneficiary or Beneficiaries previously made in accordance with this Agreement still pending on and after said sixty-first day. To the extent of such claims, the trust shall continue until those claims are discharged, dismissed, dropped, or otherwise terminated; the remainder of the trust corpus shall be conveyed forthwith to the Operator. After all remaining claims which are covered by this Trust Agreement pending on and after the said sixty-first day have been discharged, dismissed, dropped, or otherwise terminated, the Trustee shall convey forthwith the remainder of the trust corpus, if any, to the Operator.

Either the Operator or Trustee may at any time terminate this trust by written notice to: ''Special Authorities Division (P–57), Office of Aviation Analysis, U.S. Department of Transportation, Washington, DC 20590,'' such termination to become effective thirty days after the actual receipt of said notice by the Department.

In the event of any controversy or claim arising hereunder, the Trustee shall not be required to determine same or take any other action with respect thereto, but may await the settlement of such controversy or claim by final appropriate legal proceedings, and in such event shall not be liable for interest or damages of any kind.

Any Successor to the Trustee by merger, consolidation, or otherwise, shall succeed to this trusteeship and shall have the powers and obligations set forth in this Agreement.

The trust created under this Agreement shall be operated and administered under the laws of the State of _____.

IN WITNESS WHEREOF, the Operator and Trustee have executed this instrument on the _____ day of _____, _____.

Trustee

Name _____

By: Signature and title

Charter Operator

Name _____

By: Signature and title

Issued in Washington, DC, on May 8, 1998.

Charles A. Hunnicutt,

Assistant Secretary For Aviation and International Affairs.

[FR Doc. 98–12980 Filed 5–21–98; 8:45 am]

BILLING CODE 4910–62–M

ENVIRONMENTAL PROTECTION AGENCY

40 CFR Part 82

[FRL–6015–3]

Protection of Stratospheric Ozone

AGENCY: Environmental Protection Agency.

ACTION: Notice of acceptability.

SUMMARY: This document expands the list of acceptable substitutes for ozone-depleting substances (ODS) under the U.S. Environmental Protection Agency's (EPA) Significant New Alternatives Policy (SNAP) program.

EFFECTIVE DATE: May 22, 1998.

ADDRESSES: Information relevant to this document is contained in Air Docket A–91–42, U.S. Environmental Agency, Office of Air and Radiation Docket and Information Center, Room M–1500, 401 M Street, SW, Washington, DC 20460. Telephone: (202) 260–7548. The docket may be inspected between 8:00 a.m. and 5:30 p.m. weekdays. As provided in 40 CFR Part 2, a reasonable fee may be charged for photocopying.

FOR FURTHER INFORMATION CONTACT: William Monroe at (202) 564–9161 or fax (202) 565–2093, U.S. EPA, Stratospheric Protection Division, 401 M Street, S.W., Mail Code 6205J, Washington, D.C. 20460; EPA Stratospheric Ozone Protection Hotline at (800) 296–1996; EPA World Wide Web Site (http://www.epa.gov/ozone/title6/snap).

SUPPLEMENTARY INFORMATION:

I. Section 612 Program
A. Statutory Requirements
B. Regulatory History
II. Listing of Acceptable Substitutes
A. Aerosols
III. Additional Information
Appendix A—Summary of Acceptable Decisions

I. Section 612 Program

A. Statutory Requirements

Section 612 of the Clean Air Act authorizes EPA to develop a program for evaluating alternatives to ozone-depleting substances. EPA refers to this program as the Significant New Alternatives Policy (SNAP) program. The major provisions of section 612 are:

- *Rulemaking*—Section 612(c) requires EPA to promulgate rules making it unlawful to replace any class I (chlorofluorocarbon, halon, carbon tetrachloride, methyl chloroform, methyl bromide, and hydrobromofluorocarbon) or class II (hydrochlorofluorocarbon) substance with any substitute that the Administrator determines may present adverse effects to human health or the environment where the Administrator has identified an alternative that (1) reduces the overall risk to human health and the environment, and (2) is currently or potentially available.
- Listing of Unacceptable/Acceptable Substitutes—Section 612(c) also requires EPA to publish a list of the substitutes unacceptable for specific uses. EPA must publish a corresponding

list of acceptable alternatives for specific uses.

• *Petition Process*—Section 612(d) grants the right to any person to petition EPA to add a substance to or delete a substance from the lists published in accordance with section 612(c). The Agency has 90 days to grant or deny a petition. Where the Agency grants the petition, EPA must publish the revised lists within an additional 6 months.

• *90-day Notification*—Section 612(e) requires EPA to require any person who produces a chemical substitute for a class I substance to notify the Agency not less than 90 days before new or existing chemicals are introduced into interstate commerce for significant new uses as substitutes for a class I substance. The producer must also provide the Agency with the producer's unpublished health and safety studies on such substitutes.

• *Outreach*—Section 612(b)(1) states that the Administrator shall seek to maximize the use of federal research facilities and resources to assist users of class I and II substances in identifying and developing alternatives to the use of such substances in key commercial applications.

• *Clearinghouse*—Section 612(b)(4) requires the Agency to set up a public clearinghouse of alternative chemicals, product substitutes, and alternative manufacturing processes that are available for products and manufacturing processes which use class I and II substances.

B. Regulatory History

On March 18, 1994, EPA published the Final Rulemaking (FRM) (59 FR 13044) which described the process for administering the SNAP program and issued EPA's first acceptability lists for substitutes in the major industrial use sectors. These sectors include: refrigeration and air conditioning; foam blowing; solvent cleaning; fire suppression and explosion protection; sterilants; aerosols; adhesives, coatings and inks; and tobacco expansion. These sectors compose the principal industrial sectors that historically consumed the largest volumes of ozone-depleting compounds.

As described in the final rule for the SNAP program (59 FR 13044), EPA does not believe that rulemaking procedures are required to list alternatives as acceptable with no limitations. Such listings do not impose any sanction, nor do they remove any prior license to use a substance. Consequently, by this notice EPA is adding substances to the list of acceptable alternatives without first requesting comment on new listings.

EPA does, however, believe that Notice-and-Comment rulemaking is required to place any substance on the list of prohibited substitutes, to list a substance as acceptable only under certain conditions, to list substances as acceptable only for certain uses, or to remove a substance from either the list of prohibited or acceptable substitutes. Updates to these lists are published as separate notices of rulemaking in the **Federal Register**.

The Agency defines a *substitute* as any chemical, product substitute, or alternative manufacturing process, whether existing or new, that could replace a class I or class II substance. Anyone who produces a substitute must provide the Agency with health and safety studies on the substitute at least 90 days before introducing it into interstate commerce for significant new use as an alternative. This requirement applies to substitute manufacturers, but may include importers, formulators or end-users, when they are responsible for introducing a substitute into commerce.

EPA published documents listing acceptable alternatives on August 26, 1994 (59 FR 44240), January 13, 1995 (60 FR 3318), July 28, 1995 (60 FR 38729), February 8, 1996 (61 FR 4736), September 5, 1996 (61 FR 47012), March 10, 1997 (62 FR 10700), June 3, 1997 (62 FR 30275), and February 24, 1998 (63 FR 9151), and published Final Rulemakings restricting the use of certain substitutes on June 13, 1995 (60 FR 31092), May 22, 1996 (61 FR 25585), and October 16, 1996 (61 FR 54029).

II. Listing of Acceptable Substitutes

This section presents EPA's most recent acceptable listing decision for substitutes for class I and class II substances in the aerosol sector. For copies of the full list of SNAP decisions in all industrial sectors, contact the EPA Stratospheric Protection Hotline at (800) 296–1996.

Part A below presents a detailed discussion of the substitute listing determination; by major use sector; the table summarizing today's listing decision is in Appendix A. The comments contained in Appendix A provide additional information on a substitute, but for listings of acceptable substitutes, they are not legally binding under section 612 of the Clean Air Act. Thus, adherence to recommendations in the comments is not mandatory for use of a substitute. In addition, the comments should not be considered comprehensive with respect to other legal obligations pertaining to the use of the substitute. However, EPA encourages users of acceptable substitutes to apply all comments to their use of these substitutes. In many instances, the comments simply allude to sound operating practices that have already been identified in existing industry and/or building-code standards. Thus, many of the comments, if adopted, would not require significant changes in existing operating practices for the affected industry.

A. Aerosols

1. Acceptable Substitute

Under section 612 of the Clean Air Act, EPA is authorized to review substitutes for class I (CFCs) and class II (HCFCs) chemicals. The following decision expands the acceptable listing for propellants in the aerosol sector.

(a) Aerosol Propellants

(1) HFC–227ea

HFC–227ea is an acceptable substitute for CFC–11, CFC–12, CFC–114, HCFC–22, and HCFC–142b as a propellant in the aerosol sector. HFC–227ea has a zero ozone depletion potential and an atmospheric lifetime of 36.5 years, yet this compound contributes to global warming with a 100-year global warming potential (GWP) of 2,900 relative to carbon dioxide. Despite this concern, the Agency has listed this substitute as acceptable in today's notice since it meets a specialized medical application in metered dose inhalers (MDIs), used by asthmatics and others with chronic obstructive pulmonary diseases, where only one other substitute meets the medical requirements.

III. Additional Information

Contact the Stratospheric Protection Hotline at 1–800–296–1996, Monday–Friday, between the hours of 10:00 a.m. and 4:00 p.m. (Eastern Standard Time).

For more information on the Agency's process for administering the SNAP program or criteria for evaluation of substitutes, refer to the SNAP final rulemaking published in the **Federal Register** on March 18, 1994 (59 FR 13044). Notices and rulemakings under the SNAP program, as well as all EPA publications on protection of stratospheric ozone, are available from EPA's Ozone World Wide Web site at ''http://www.epa.gov/ozone/title6/snap'' and from the stratospheric Protection Hotline whose number is listed above.

Dated: May 8, 1998.

Richard D. Wilson,

Acting Assistant Administrator for Air and Radiation.

Note: The following Appendix will not appear in the Code of Federal Regulations.

APPENDIX A: SUMMARY OF ACCEPTABLE DECISIONS

[Aerosol Propellants]

ODS being replaced	Substitute	Decision	Comments
CFC–11, CFC–12, CFC–114, HCFC–22, HCFC–142b as aerosol propellant.	HFC–227ea	Acceptable	Despite the relatively high global warming potential of this compound, the Agency has listed this substitute as acceptable since it meets a specialized application in MDIs where other substitutes do not provide acceptable performance.

[FR Doc. 98–13125 Filed 5–21–98; 8:45 am]

BILLING CODE 6560–50–P

ENVIRONMENTAL PROTECTION AGENCY

40 CFR Part 180

[OPP–300658; FRL–5790–1]

RIN 2070–AB78

Hydroxyethylidine Diphosphonic Acid; Exemption From the Requirement of a Tolerance

AGENCY: Environmental Protection Agency (EPA).

ACTION: Final rule.

SUMMARY: This regulation establishes an exemption from the requirement of a tolerance for residues of hydroxyethylidine diphosphonic acid (HEDP), when used as an inert ingredient (stabilizer/ chelator) in antimicrobial pesticide formulations applied in or on raw agricultural commodities. Ecolab, Inc. requested this tolerance under the Federal Food, Drug and Cosmetic Act (FFDCA), as amended by the Food Quality Protection Act of 1996 (Pub. L. 104–170).

DATES: This regulation is effective May 22, 1998. Objections and requests for hearings must be received by EPA on or before July 21, 1998.

ADDRESSES: Written objections and hearing requests, identified by the docket control number, [OPP–300658], must be submitted to: Hearing Clerk (1900), Environmental Protection Agency, Rm. M3708, 401 M St., SW., Washington, DC 20460. Fees accompanying objections and hearing requests shall be labeled ''Tolerance Petition Fees'' and forwarded to: EPA Headquarters Accounting Operations Branch, OPP (Tolerance Fees), P.O. Box 360277M, Pittsburgh, PA 15251. A copy of any objections and hearing requests filed with the Hearing Clerk identified by the docket control number, [OPP–300658], must also be submitted to: Public Information and Records Integrity Branch, Information Resources and Services Division (7502C), Office of Pesticide Programs, Environmental Protection Agency, 401 M St., SW., Washington, DC 20460. In person, bring a copy of objections and hearing requests to Rm. 119, CM #2, 1921 Jefferson Davis Hwy., Arlington, VA.

A copy of objections and hearing requests filed with the Hearing Clerk may also be submitted electronically by sending electronic mail (e-mail) to: opp-docket@epamail.epa.gov. Copies of objections and hearing requests must be submitted as an ASCII file avoiding the use of special characters and any form of encryption. Copies of objections and hearing requests will also be accepted on disks in WordPerfect 5.1/6.1 file format or ASCII file format. All copies of objections and hearing requests in electronic form must be identified by the docket control number [OPP–300658]. No Confidential Business Information (CBI) should be submitted through e-mail. Electronic copies of objections and hearing requests on this rule may be filed online at many Federal Depository Libraries.

FOR FURTHER INFORMATION CONTACT: By mail: Amelia M. Acierto, Registration Division (7505W), Office of Pesticide Programs, Environmental Protection Agency, 401 M St., SW., Washington, DC 20460. Office location, telephone number, and e-mail address: Crystal Mall #2, 1921 Jefferson Davis Hwy., Arlington, VA, (703) 308–8377, e-mail: acierto.amelia@epamail.epa.gov.

SUPPLEMENTARY INFORMATION: In the **Federal Register** of December 17, 1997 (62 FR 66091) (FRL–5760–5), EPA issued a notice pursuant to section 408 of the Federal Food, Drug, and Cosmetic Act (FFDCA), 21 U.S.C. 346a(e) announcing the filing of a pesticide petition (PP 7E4922) for a tolerance exemption by Ecolab Inc., 370 N. Wabasha Street, St. Paul, Minnesota 55102. This notice included a summary of the petition prepared by Ecolab Inc., the petitioner. There were no comments received in response to the notice of filing.

The petition requested that 40 CFR 180.1001(c) be amended by establishing an exemption from the requirement of a tolerance for residues of the inert ingredient hydroxyethylidine diphosphonic acid (HEDP), when used as an inert ingredient (stabilizer and chelator) in antimicrobial pesticide formulations used in or on raw agricultural commodities.

I. Risk Assessment and Statutory Findings

New section 408(b)(2)(A)(i) of the FFDCA allows EPA to establish a tolerance (the legal limit for a pesticide chemical residue in or on a food) only if EPA determines that the tolerance is ''safe.'' Section 408(b)(2)(A)(ii) defines ''safe'' to mean that ''there is a reasonable certainty that no harm will result from aggregate exposure to the pesticide chemical residue, including all anticipated dietary exposures and all other exposures for which there is reliable information.'' This includes exposure through drinking water and in residential settings, but does not include occupational exposure. Section 408(b)(2)(C) requires EPA to give special consideration to exposure of infants and children to the pesticide chemical residue in establishing a tolerance and to ''ensure that there is a reasonable certainty that no harm will result to infants and children from aggregate exposure to the pesticide chemical residue. . . .''

EPA performs a number of analyses to determine the risks from aggregate exposure to pesticide residues. First, EPA determines the toxicity of pesticides based primarily on toxicological studies using laboratory animals. These studies address many adverse health effects, including (but not limited to) reproductive effects, developmental toxicity, toxicity to the nervous system, and carcinogenicity. Second, EPA examines exposure to the pesticide through the diet (e.g., food and drinking water) and through exposures that occur as a result of pesticide use in residential settings.

A. Toxicity

1. *Threshold and non-threshold effects.* For many animal studies, a dose response relationship can be determined, which provides a dose that causes adverse effects (threshold effects) and doses causing no observed effects (the ''no-observed effect level'' or ''NOEL'').

Once a study has been evaluated and the observed effects have been determined to be threshold effects, EPA generally divides the NOEL from the study with the lowest NOEL by an uncertainty factor (usually 100 or more) to determine the Reference Dose (RfD). The RfD is a level at or below which daily aggregate exposure over a lifetime will not pose appreciable risks to human health. An uncertainty factor (sometimes called a ''safety factor'') of 100 is commonly used since it is assumed that people may be up to 10 times more sensitive to pesticides than the test animals, and that one person or subgroup of the population (such as infants and children) could be up to 10 times more sensitive to a pesticide than another. In addition, EPA assesses the potential risks to infants and children based on the weight of the evidence of the toxicology studies and determines whether an additional uncertainty factor is warranted. Thus, an aggregate daily exposure to a pesticide residue at or below the RfD (expressed as 100 percent or less of the RfD) is generally considered acceptable by EPA. EPA generally uses the RfD to evaluate the chronic risks posed by pesticide exposure. For shorter term risks, EPA calculates a margin of exposure (MOE) by dividing the estimated human exposure into the NOEL from the appropriate animal study. Commonly, EPA finds MOEs lower than 100 to be unacceptable. This hundredfold MOE is based on the same rationale as the hundredfold uncertainty factor.

Lifetime feeding studies in two species of laboratory animals are conducted to screen pesticides for cancer effects. When evidence of increased cancer is noted in these studies, the Agency conducts a weight of the evidence review of all relevant toxicological data including short-term and mutagenicity studies and structure activity relationship. Once a pesticide has been classified as a potential human carcinogen, different types of risk assessments (e.g., linear low dose extrapolations or MOE calculation based on the appropriate NOEL) will be carried out based on the nature of the carcinogenic response and the Agency's knowledge of its mode of action.

2. *Differences in toxic effect due to exposure duration.* The toxicological effects of a pesticide can vary with different exposure durations. EPA considers the entire toxicity data base, and based on the effects seen for different durations and routes of exposure, determines which risk assessments should be done to assure that the public is adequately protected from any pesticide exposure scenario. Both short and long durations of exposure are always considered. Typically, risk assessments include ''acute,'' ''short-term,'' ''intermediate term,'' and ''chronic'' risks. These assessments are defined by the Agency as follows.

Acute risk, by the Agency's definition, results from 1–day consumption of food and water, and reflects toxicity which could be expressed following a single oral exposure to the pesticide residues. High end exposure to food and water residues are typically assumed.

Short-term risk results from exposure to the pesticide for a period of 1–7 days, and therefore overlaps with the acute risk assessment. Historically, this risk assessment was intended to address primarily dermal and inhalation exposure which could result, for example, from residential pesticide applications. However, since enaction of the Food Quality Protection Act, this assessment has been expanded to include both dietary and non-dietary sources of exposure, and will typically consider exposure from food, water, and residential uses when reliable data are available. In this assessment, risks from average food and water exposure, and high-end residential exposure, are aggregated. High-end exposures from all three sources are not typically added because of the very low probability of this occurring in most cases, and because the other conservative assumptions built into the assessment assure adequate protection of public health. However, for cases in which high-end exposure can reasonably be expected from multiple sources (e.g. frequent and widespread homeowner use in a specific geographical area), multiple high-end risks will be aggregated and presented as part of the comprehensive risk assessment/characterization. Since the toxicological endpoint considered in this assessment reflects exposure over a period of at least 7 days, an additional degree of conservatism is built into the assessment; i.e., the risk assessment nominally covers 1–7 days exposure, and the toxicological endpoint/NOEL is selected to be adequate for at least 7 days of exposure. (Toxicity results at lower levels when the dosing duration is increased.)

Intermediate-term risk results from exposure for 7 days to several months. This assessment is handled in a manner similar to the short-term risk assessment.

Chronic risk assessment describes risk which could result from several months to a lifetime of exposure. For this assessment, risks are aggregated considering average exposure from all sources for representative population subgroups including infants and children.

B. Aggregate Exposure

In examining aggregate exposure, FFDCA section 408 requires that EPA take into account available and reliable information concerning exposure from the pesticide residue in the food in question, residues in other foods for which there are tolerances, residues in groundwater or surface water that is consumed as drinking water, and other non-occupational exposures through pesticide use in gardens, lawns, or buildings (residential and other indoor uses). Dietary exposure to residues of a pesticide in a food commodity are estimated by multiplying the average daily consumption of the food forms of that commodity by the tolerance level or the anticipated pesticide residue level. The Theoretical Maximum Residue Contribution (TMRC) is an estimate of the level of residues consumed daily if each food item contained pesticide residues equal to the tolerance. In evaluating food exposures, EPA takes into account varying consumption patterns of major identifiable subgroups of consumers, including infants and children. The TMRC is a ''worst case'' estimate since it is based on the assumptions that food contains pesticide residues at the tolerance level and that 100 percent of the crop is treated by pesticides that have established tolerances. If the TMRC exceeds the RfD or poses a lifetime cancer risk that is greater than approximately one in a million, EPA attempts to derive a more accurate exposure estimate for the pesticide by evaluating additional types of information (anticipated residue data and/or percent of crop treated data) which show, generally, that pesticide residues in most foods when they are eaten are well below established tolerances.

II. Aggregate Risk Assessment and Determination of Safety

Consistent with section 408(b)(2)(D), EPA has reviewed the available scientific data and other relevant information in support of this action, EPA has sufficient data to assess the hazards of HEDP and to make a determination on aggregate exposure, consistent with section 408(b)(2), for an exemption from the requirement of a tolerance for residues of HEDP when used as an inert ingredient in antimicrobial pesticide formulations applied to raw agricultural commodities. EPA's assessment of the dietary exposures and risks associated

with establishing the tolerance exemption follows.

A. Toxicological Profile

EPA has evaluated the available toxicity data and considered its validity, completeness, and reliability as well as the relationship of the results of the studies to human risk. EPA has also considered available information concerning the variability of the sensitivities of major identifiable subgroups of consumers, including infants and children. The nature of the toxic effects caused by HEDP are discussed below.

1. *Acute toxicity*. A rat acute oral study with an LD_{50} of 2,400 mg/kg.

2. *Genotoxicity*. HEDP was reported to be non-mutagenic in a *Salmonella*/ Mammalian microsome test or in a L5178Y TK mouse lymphoma cell point mutation assay, with and without mammalian microsomal activation.

3. *Subchronic toxicity*— i. *Dogs*. In a subchronic feeding study in beagle dogs (4 dogs/sex/dose), HEDP was administered at doses of 0, 1,000, 3,000, or 10,000 ppm for 90 days. The NOEL was 3,000 ppm (75 milligrams/ kilogram/day (mg/kg/day)) and the Lowest Observed Effect Level (LOEL) was 10,000 ppm (250 mg/kg/day based on decreased weight gain in females, and decreased testicular weight accompanied by evidence of bilateral focal degeneration of the testicular germinal epithelium in males.

ii. *Rats*. In a subchronic feeding study in rats, Sprague-Dawley strain rats were fed HEDP at dietary concentrations of 0, 3,000, 10,000 and 30,000 ppm for 90 days. The NOEL was 10,000 ppm (approximately 500 mg/kg/day) and the LOEL was 30,000 ppm (approximately 1,500 mg/kg/day) based on decreased body weight, decreased food consumption, slight anemia, and decreased heart, liver, and kidney weights.

4. *Developmental toxicity study*. In a developmental toxicity study, rabbits were administered HEDP at doses of 0, 25, 50 and 100 mg/kg/day, either incorporated into feed or by intubation with water. The NOEL for both systemic and developmental effects was 50 mg/ kg/day and the LOEL was 100 mg/kg/ day gavage dose based on decreased maternal weight gain/ food consumption and decreased fetal body weights.

5. *Reproductive toxicity study*. In a combined two-generation reproduction/ developmental toxicity study, rats (22 rats/sex/dose) were administered HEDP at doses of 0, 0.1, and 0.5 percent in the diet. The NOEL for developmental and reproductive findings was 50 mg/kg/day (0.1 percent in the diet) and the LOEL was 250 mg/kg/day (0.5 percent in the diet) based on reduced litter size in the first litter (F1a) and an increase in stillborn pups in the second liter (F1b). These effects occurred in the absence of maternal toxicity and were seen in both reproductive litters of the first generation.

B. Toxicological Endpoints

1. *Acute toxicity*. An acute dietary risk assessment is not required because no significant treatment-related effects attributable to a single exposure (dose) were seen in the oral studies conducted with HEDP.

2. *Short - and intermediate - term toxicity*. A short- and intermediate-term risk assessment is not required for HEDP since significant short- and intermediate- term exposures are not expected as a result of the proposed use pattern.

3. *Chronic toxicity*. EPA has established the RfD for HEDP at 0.05 mg/kg/day. This RfD is based on a reproductive/developmental toxicity study in rats with a NOEL of 50 mg/kg/ day. An uncertainty factor of 1,000 was used in the calculation of the RfD to account for intraspecies variability (tenfold uncertainty factor), interspecies extrapolation (tenfold uncertainty factor), lack of chronic toxicity/ carcinogenicity data (threefold uncertainty factor), and the additional sensitivity of infants and children (threefold uncertainty factor). The product of these four individual uncertainty factors results in an overall uncertainty factor of 1,000.

4. *Carcinogenicity*. A survey of the open literature has not revealed any studies as to the carcinogenicity of HEDP. Since HEDP has been determined to be nonmutagenic in genotoxicity testing and no preneoplastic lesions have been noted in any of the available animal or human test data, it is expected that the use of an additional threefold uncertainty factor in the chronic risk assessment of HEDP to account for the lack of carcinogenicity data should be protective of any possible cancer risk.

C. Exposures and Risks

1. *From food and feed uses*. Risk assessments were conducted by EPA to assess dietary exposures and risks from HEDP as follows:

i. *Acute exposure and risk*. Since there are no acute toxicological concerns for HEDP, an acute dietary risk assessment was not required.

ii. *Chronic exposure and risk*. For the purpose of assessing chronic dietary exposure from HEDP, EPA considered the proposed use of HEDP as a component of an antimicrobial pesticide formulation at a concentration not to exceed 1 percent of the formulation and a maximum use rate of the antimicrobial formulation used in fruit and vegetable wash water of 1 ounce/16.4 gallons of water. There are no established U.S. tolerances for HEDP, and there are no other registered uses for HEDP on food or feed crops in the United States. In conducting this exposure assessment, EPA assumed that residues of 1 part per billion (ppb) of HEDP would be present in all raw agricultural commodities, resulting in a large overestimate of dietary exposure and protective of any chronic dietary exposure scenario. (Limted data provided by the petitioner and prior estimations of dietary intake made by the U.S Food and Drug Administration (FDA) for the use of HEDP in antimicrobial applications to processed foods indicate that residues of HEDP in the treated commodities would be unlikely to exceed 1 ppb.) Based on the assumption that residues would be present at 1 ppb in all items consumed in the diet, it is estimated that the resultant dietary exposure would be 0.00004 mg/kg/day for adults (U.S. population) and 0.0001 mg/kg/day for children.

2. *From drinking water*— i. *Acute exposure and risk*. Since there are no acute toxicological concerns for HEDP, an acute drinking water risk assessment was not required.

ii. *Chronic exposure and risk*. For the purposes of assessing chronic exposure in drinking water, EPA has considered the current use of HEDP as an antiscalant in municipal drinking water treatment systems at a maximum concentration of 25 ppb in consumed water. Based on a typical average daily consumption of 2 liters of water/ day by adults and 1 liter water/day by children. The exposure to HEDP from drinking water exposure would not be expected to exceed 0.0007 mg/kg/day for adults and 0.0025 mg/kg/day for children.

3. *From non-dietary exposure*. Since there are no acute toxicological concerns for HEDP, an acute nondietary risk assessment was not required.

Chronic exposure and risk. While non-dietary exposure to HEDP as a result of its use in antimicrobial pesticide formulations applied to raw agricultural commodites is unlikely other uses of HEPD for which non-dietary exposure may result include its use in various personal care and over-the-counter pharmaceutical products. It is expected that the exposures associated with these uses would not exceed 0.0049 mg/kg/day for adults and 0.0204 mg/kg/day for children.

4. *Cumulative exposure to substances with common mechanism of toxicity.* Section 408(b)(2)(D)(v) requires that, when considering whether to establish, modify, or revoke a tolerance, the Agency consider ''available information'' concerning the cumulative effects of a particular pesticide's residues and ''other substances that have a common mechanism of toxicity.'' The Agency believes that ''available information'' in this context might include not only toxicity, chemistry, and exposure data, but also scientific policies and methodologies for understanding common mechanisms of toxicity and conducting cumulative risk assessments. For most pesticides, although the Agency has some information in its files that may turn out to be helpful in eventually determining whether a pesticide shares a common mechanism of toxicity with any other substances, EPA does not at this time have the methodologies to resolve the complex scientific issues concerning common mechanism of toxicity in a meaningful way. EPA has begun a pilot process to study this issue further through the examination of particular classes of pesticides. The Agency hopes that the results of this pilot process will increase the Agency's scientific understanding of this question such that EPA will be able to develop and apply scientific principles for better determining which chemicals have a common mechanism of toxicity and evaluating the cumulative effects of such chemicals. The Agency anticipates, however, that even as its understanding of the science of common mechanisms increases, decisions on specific classes of chemicals will be heavily dependent on chemical specific data, much of which may not be presently available.

Although at present the Agency does not know how to apply the information in its files concerning common mechanism issues to most risk assessments, there are pesticides as to which the common mechanism issues can be resolved. These pesticides include pesticides that are toxicologically dissimilar to existing chemical substances (in which case the Agency can conclude that it is unlikely that a pesticide shares a common mechanism of activity with other substances) and pesticides that produce a common toxic metabolite (in which case common mechanism of activity will be assumed).

EPA does not have, at this time, available data to determine whether HEDP has a common mechanism of toxicity with other substances or how to include this pesticide in a cumulative risk assessment. Unlike other pesticides for which EPA has followed a cumulative risk approach based on a common mechanism of toxicity, HEDP does not appear to produce a toxic metabolite produced by other substances. For the purposes of this tolerance action, therefore, EPA has not assumed that HEDP has a common mechanism of toxicity with other substances.

D. Aggregate Risks and Determination of Safety for U.S. Population

Using the extremely conservative exposure assumptions described above, EPA has concluded that aggregate exposure to HEDP from all pesticide and nonpesticide uses will not exceed 0.006 mg/kg/day for adults (12 percent of the RfD) and 0.023 mg/kg/day for children (46 percent of the RfD. EPA generally has no concern for exposures below 100 percent of the RfD because the RfD represents the level at or below which daily aggregate dietary exposure over a lifetime will not pose appreciable risks to human health. EPA does not expect the aggregate exposure to exceed 100 percent of the RfD. EPA therefore concludes that there is a reasonable certainty that no harm will result from aggregate exposure to HEDP residues.

E. Aggregate Risks and Determination of Safety for Infants and Children

Safety factor for infants and children. In assessing the potential for additional sensitivity of infants and children to residues of HEDP, EPA considered data from developmental toxicity studies in the rat and rabbit and a two-generation reproduction study in the rat. The developmental toxicity studies are designed to evaluate adverse effects on the developing organism resulting from maternal pesticide exposure gestation. Reproduction studies provide information relating to effects from exposure to the pesticide on the reproductive capability of mating animals and data on systemic toxicity.

FFDCA section 408 provides that EPA shall apply an additional tenfold margin of safety for infants and children in the case of threshold effects to account for pre-and post-natal toxicity and the completeness of the database unless EPA determines that a different margin of safety will be safe for infants and children. Margins of safety are incorporated into EPA risk assessments either directly through use of a MOE analysis or through using uncertainty (safety) factors in calculating a dose level that poses no appreciable risk to humans. In either case, EPA generally defines the level of appreciable risk as exposure that is greater than 1/100 of the NOEL in the animal study appropriate to the particular risk assessment. This hundredfold uncertainty (safety) factor/MOE (safety) is designed to account for inter-species extraoplation and inter-species variability. EPA believes that reliable data support using the hundredfold margin/factor, rather than the thousandfold margin/factor, when EPA has a complete data base under existing guidleines, and when the severity of the effect in infants or children, the potency or unusual toxic properties of a compound, or the quality of the exposure data do not raise concerns regarding the adequacy of the standard margin/factor.

The following factors support retention of a tenfold uncertainly factor: (i) The reproductive effects were observed at dose levels in which there was no apparent maternal toxicity, (ii) the study was not conducted in accordance with OPP's Subdivision F (Hazard Evaluation: Humans and Domestic Animals) Pesticide Assessment Guidelines, and (iii) a prenatal developmental toxicity study of HEDP in rats conducted via the gavage route of administration was not available (the dietary developmental toxicity study in rats which was conducted as part of the reproductive study did not completely meet Subdivision F Pesticide Assessment Guideline requirements. However, the noted reproductive effects (decreased average number of live fetuses and increases in stillborn pups) were seen as separate, single litter events of the first generation but not of the second generation which would render less significance to a finding of a treatment-related effect. Taking into account that in this case there are study deficiencies not absent studies, the evidence of a reproductive effects in the absence of maternal toxicity is equivocal, and developmental effects were observed in rabbits at dose levels in which maternal toxicity was not observed, EPA has concluded that the tenfold uncertainty factor for infants and children should be reduced to a threefold uncertainty factor.

III. Other Considerations

A. Analytical Enforcement Methodology

The Agency is establishing an exemption from the requirement of a tolerance without any numerical limitation; therefore, the Agency has concluded that an analytical method is not required for enforcement purposes for HEDP.

B. International Residue Limits

No Codex maximum residue levels have been established for HEDP.

IV. Conclusion

Therefore, an exemption from the requirement of a tolerance is established for residues of HEDP when used as an inert ingredient (stabilizer/ chelator) in antimicrobial pesticide formulations applied to raw agricultural commodites at a level not to exceed 1 percent of the antimicrobial pesticide formulation.

V. Objections and Hearing Requests

The new FFDCA section 408(g) provides essentially the same process for persons to ''object'' to a tolerance regulation issued by EPA under new section 408(e) and (l)(6) as was provided in the old section 408 and in section 409. However, the period for filing objections is 60 days, rather than 30 days. EPA currently has procedural regulations which govern the submission of objections and hearing requests. These regulations will require some modification to reflect the new law. However, until those modifications can be made, EPA will continue to use those procedural regulations with appropriate adjustments to reflect the new law.

Any person may, by July 21, 1998, file written objections to any aspect of this regulation and may also request a hearing on those objections. Objections and hearing requests must be filed with the Hearing Clerk, at the address given above (40 CFR 178.20). A copy of the objections and/or hearing requests filed with the Hearing Clerk should be submitted to the OPP docket for this rulemaking. The objections submitted must specify the provisions of the regulation deemed objectionable and the grounds for the objections (40 CFR 178.25). Each objection must be accompanied by the fee prescribed by 40 CFR 180.33(i). If a hearing is requested, the objections must include a statement of the factual issues on which a hearing is requested, the requestor's contentions on such issues, and a summary of any evidence relied upon by the requestor (40 CFR 178.27). A request for a hearing will be granted if the Administrator determines that the material submitted shows the following: There is genuine and substantial issue of fact; there is a reasonable possibility that available evidence identified by the requestor would, if established, resolve one or more of such issues in favor of the requestor, taking into account uncontested claims or facts to the contrary; and resolution of the factual issues in the manner sought by the requestor would be adequate to justify the action requested (40 CFR 178.32). Information submitted in connection with an objection or hearing request may be claimed confidential by marking any part or all of that information as CBI. Information so marked will not be disclosed except in accordance with procedures set forth in 40 CFR part 2. A copy of the information that does not contain CBI must be submitted for inclusion in the public record. Information not marked confidential may be disclosed publicly by EPA without prior notice.

VI. Public Docket and Electronic Submissions

EPA has established a record for this rulemaking under docket control number [OPP–300658] (including any comments and data submitted electronically). A public version of this record, including printed, paper versions of electronic comments, which does not include any information claimed as CBI, is available for inspection from 8:30 a.m. to 4 p.m., Monday through Friday, excluding legal holidays. The public record is located in Room 119 of the Public Information and Records Integrity Branch, Information Resources and Services Division (7502C), Office of Pesticide Programs, Environmental Protection Agency, Crystal Mall #2, 1921 Jefferson Davis Hwy., Arlington, VA.

Electronic comments may be sent directly to EPA at:

opp-docket@epamail.epa.gov.

Electronic comments must be submitted as an ASCII file avoiding the use of special characters and any form of encryption.

The official record for this rulemaking, as well as the public version, as described above will be kept in paper form. Accordingly, EPA will transfer any copies of objections and hearing requests received electronically into printed, paper form as they are received and will place the paper copies in the official rulemaking record which will also include all comments submitted directly in writing. The official rulemaking record is the paper record maintained at the Virginia address in ''ADDRESSES'' at the beginning of this document.

VII. Regulatory Assessment Requirements

This final rule establishes an exemption from the requirement of a tolerance under FFDCA section 408(d) in response to a petition submitted to the Agency. The Office of Management and Budget (OMB) has exempted these types of actions from review under Executive Order 12866, entitled Regulatory Planning and Review (58 FR 51735, October 4, 1993). This final rule does not contain any information collections subject to OMB approval under the Paperwork Reduction Act (PRA), 44 U.S.C. 3501 *et seq.*, or impose any enforceable duty or contain any unfunded mandate as described under Title II of the Unfunded Mandates Reform Act of 1995 (UMRA) (Pub. L. 104–4). Nor does it require any prior consultation as specified by Executive Order 12875, entitled Enhancing the Intergovernmental Partnership (58 FR 58093, October 28, 1993), or special considerations as required by Executive Order 12898, entitled Federal Actions to Address Environmental Justice in Minority Populations and Low-Income Populations (59 FR 7629, February 16, 1994), or require OMB review in accordance with Executive Order 13045, entitled Protection of Children from Environmental Health Risks and Safety Risks (62 FR 19885, April 23, 1997).

In addition, since these tolerances and exemptions that are established on the basis of a petition under FFDCA section 408(d), such as the exemption in this final rule, do not require the issuance of a proposed rule, the requirements of the Regulatory Flexibility Act (RFA) (5 U.S.C. 601 *et seq.*) do not apply. Nevertheless, the Agency has previously assessed whether establishing tolerances, exemptions from tolerances, raising tolerance levels or expanding exemptions might adversely impact small entities and concluded, as a generic matter, that there is no adverse economic impact. The factual basis for the Agency's generic certification for tolerance actions published on May 4, 1981 (46 FR 24950) and was provided to the Chief Counsel for Advocacy of the Small Business Administration.

VIII. Submission to Congress and the General Accounting Office

Under 5 U.S.C. 801(a)(1)(A), as added by the Small Business Regulatory Enforcement Fairness Act of 1996, the Agency has submitted a report containing this rule and other required information to the U.S. Senate, the U.S. House of Representatives, and the Comptroller General of the General Accounting Office prior to publication of this rule in today's **Federal Register**. This is not a ''major rule'' as defined by 5 U.S.C. 804(2).

List of Subjects in 40 CFR Part 180

Environmental protection, Administrative practice and procedure, Agricultural commodities, Pesticides and pests, Reporting and recordkeeping requirements.

Dated: May 8, 1998.

Peter Caulkins,

Acting Director, Registration Division, Office of Pesticide Programs.

Therefore, 40 CFR chapter I is amended as follows:

PART 180— [AMENDED]

1. The authority citation for part 180 continues to read as follows:

Authority: 21 U.S.C. 346a and 371.

2. In § 180.1001, in paragraph (c), the table is amended by alphabetically adding the inert ingredient ''hydroxyethylidine diphosphonic acid (HEDP)'' to read as follows:

§ 180.1001 Exemptions from the requirement of a tolerance.

* * * * *

(c) * * *

Inert ingredients	Limits	Uses
* * *	* * *	*
Hydroxyethylidine diphosphonic acid (HEDP) (CAS Reg. No. 2809–21–4).	For use in antimicrobial pesticide formulations at not more than 1 percent.	Stabilizer, chelator
* * *	* * *	*

* * * * *

[FR Doc. 98–13603 Filed 5–21–98; 8:45 am]

BILLING CODE 6560–50–F

ENVIRONMENTAL PROTECTION AGENCY

40 CFR Part 180

[OPP–300659; FRL–5790–3]

RIN 2070–AB78

Bacillus Thuringiensis Subspecies tolworthi Cry9C Protein and the Genetic Material Necessary for its Production in Corn; Exemption from the Requirement of a Tolerance

AGENCY: Environmental Protection Agency (EPA).

ACTION: Final rule.

SUMMARY: This rule amends an exemption from the requirement of a tolerance for resid ues of the insecticide, *Bacillus thuringiensis* subspecies *tolworthi* Cry9C protein and the genetic material necessary for its production in corn for feed use only; as well as in meat, poultry, milk, or eggs resulting from animals fed such feed. Plant Genetic Systems (America), Inc. submitted a petition to the EPA under the Federal Food, Drug and Cosmetic Act (FFDCA) as amended by the Food Quality Protection Act (FQPA) of 1996 requesting the exemption from the requirement of a tolerance. This regulation eliminates the need to establish a maximum permissible level for residues of this plant-pesticide in or on corn used for feed; as well as in meat, poultry, milk, or eggs resulting from animals fed such feed.

EFFECTIVE DATE: This regulation is effective May 22, 1998. Objections and requests for hearings must be received by EPA on or before July 21, 1998.

ADDRESSES: Written objections and hearing requests, identified by the docket control number [OPP–300659], must be submitted to: Hearing Clerk (1900), Environmental Protection Agency, Rm. M3708, 401 M St., SW., Washington, DC 20460. Fees accompanying objections and hearing requests shall be labeled ''Tolerance Petition Fees'' and forwarded to: EPA Headquarters Accounting Operations Branch, OPP (Tolerance Fees), P.O. Box 360277M, Pittsburgh, PA 15251. A copy of any objections and hearing requests filed with the Hearing Clerk identified by the docket control number, [OPP–300659], must also be submitted to: Public Information and Records Integrity Branch, Information Resources and Services Division (7502C), Office of Pesticide Programs, Environmental Protection Agency, 401 M St., SW., Washington, DC 20460. In person, bring a copy of objections and hearing requests to Rm. 119, CM #2, 1921 Jefferson Davis Hwy., Arlington, VA.

A copy of objections and hearing requests filed with the Hearing Clerk may be submitted electronically by sending electronic mail (e-mail) to: opp-docket@epamail.epa.gov. Copies of electronic objections and hearing requests must be submitted as an ASCII file avoiding the use of special characters and any form of encryption. Copies of electronic objections and hearing requests will also be accepted on disks in WordPerfect 5.1/6.1 or ASCII file format. All copies of electronic objections and hearing requests must be identified by the docket number [OPP–300659]. No Confidential Business Information (CBI) should be submitted through e-mail. Copies of electronic objections and hearing requests on this rule may be filed online at many Federal Depository Libraries.

FOR FURTHER INFORMATION CONTACT: By mail: Mike Mendelsohn, Regulatory Action Leader, Biopesticides and Pollution Prevention Division (7511W), Office of Pesticide Programs, Environmental Protection Agency, 401 M St., SW., Washington, DC 20460, Office location, telephone number, and e-mail: Room CS15–W29, 2800 Jefferson Davis Highway, Arlington, VA, 703–308–8715, e-mail: mendelsohn.mike@epamail.epa.gov.

SUPPLEMENTARY INFORMATION: Plant Genetic Systems (America), Inc., 7200 Hickman Road, Suite 202, Des Moines, IA 50322 has requested in pesticide petition (PP 7F4826) the establishment of an exemption from the requirement of a tolerance for residues of the insecticide *Bacillus thuringiensis* subspecies *tolworthi* Cry9C protein and the genetic material necessary for its production in corn in or on all raw agricultural commodities. A notice of filing (FRL–5739–9) was published in the **Federal Register** (62 FR 49224, September 19, 1997), and the notice announced that the comment period would end on October 20, 1997; no comments were received. Plant Genetic Systems (America), Inc. submitted an amendment to their petition on April 24, 1998 to request the establishment of an exemption from the requirement of a tolerance for residues of the insecticide *Bacillus thuringiensis* subspecies *tolworthi* Cry9C protein and the genetic material necessary for its production in corn only in corn used for feed; as well as in meat, poultry, milk, or eggs resulting from animals fed such feed. This exemption from the requirement of a tolerance will permit the marketing of feed corn containing the plant-pesticide; as well as meat, poultry, milk, or eggs resulting from animals fed such feed. The data submitted in the petition and all other relevant material have been evaluated. Following is a summary of EPA's findings regarding this petition as required by section 408(d) of the Federal Food, Drug and Cosmetic Act (FFDCA), 21 U.S.C. 346a, as recently amended by the Food Quality Protection Act (FQPA), Pub. L. 104–170.

I. Risk Assessment and Statutory Findings

A. Product Identity/Chemistry

The Cry9C gene was originally isolated from a *Bacillus thuringiensis* subsp. *tolworthi* strain. The gene was then synthesized with plant preferred codons before it was stably inserted into corn plants to produce a truncated and modified Cry9C protein. The tryptic core of the microbially produced Cry9C delta-endotoxin is similar to the Cry9C protein found in event CBH351 save for a single amino acid substitution in the internal sequence and the addition of two amino acids to the *N*-terminus. The Cry9C protein was produced and purified from a bacterial host to utilize in the mammalian toxicity studies due to the bacterium's greater production potential. Product analysis that compared the Cry9C protein from the two sources included: SDS-PAGE, Western blots, *N*-terminal amino acid sequencing, glycosylation tests (for possible post- translational modifications) and insect bioassays. No analytical method was included since this petition requests an exemption from the requirement of a tolerance.

B. Mammalian Toxicological Profile

Consistent with section 408(b)(2)(D) of FFDCA, EPA has reviewed the available scientific data and other relevant information in support of this action and considered its validity, completeness and reliability and the relationship of this information to human risk. EPA has also considered available information concerning the variability of the sensitivities of major identifiable subgroups of consumers, including infants and children. Additionally, section 408(b)(2)(D)(v) requires that, when considering whether to establish, modify, or revoke a tolerance, the Agency consider ''available information'' concerning the cumulative effects of a particular pesticide's residues and ''other substances that have a common mechanism of toxicity.'' A high-dose acute oral toxicity study (3,760 mg/kg body weight) showed no mortalities. Transient weight losses were seen in three female treated animals, with one not recovering her pre-dosing, pre-fast weight at 14 days after dose administration. The treated males showed no weight losses. Transient weight loss has been observed in similar studies conducted on other purified Cry proteins as well as microbial pesticides containing Cry proteins and is not considered a significant adverse effect. The *in vitro* digestibility study showed the Cry9C protein to be stable to pepsin digestion at pH 2.0 for 4 hours. The Cry9C protein is also heat stable, not being affected by incubation at 90 ° C for 10 minutes. The Cry9C protein in corn is the trypsin resistant core and is therefore stable to tryptic digest. A search for amino acid homology did not reveal any significant homology with known toxins or allergens. The genetic material necessary for the production of the plant-pesticide active ingredient is the nucleic acids (DNA) which comprise genetic material encoding the Cry9C protein and its regulatory regions. Regulatory regions are the genetic material that control the expression of the genetic material encoding the proteins, such as promoters, terminators, and enhancers. DNA is common to all forms of plant and animal life and the Agency knows of no instance where these nucleic acids have been associated with toxic effects related to their consumption as a component of food. These ubiquitous nucleic acids as they appear in the subject plant-pesticide have been adequately characterized by the applicant and supports EPA's conclusion that no mammalian toxicity is anticipated from dietary exposure to the genetic material necessary for the production of the Cry9C protein.

C. Aggregate Exposure

The available information on the aggregate exposure levels of consumers (and major identifiable subgroups of consumers) to the Cry9C protein residue include dietary exposure and exposure from non-occupational sources. Exposure via the skin or inhalation is not likely since the Cry9C plant-pesticide is contained within plant cells essentially eliminating these exposure routes or reducing these exposure routes to negligible. Drinking water is unlikely to be significantly contaminated with Cry9C protein due to the low expression of the protein in corn tissue, degradation of plant materials in the soil and low leaching potential of a protein from a soil matrix. Minimal to non-existent oral exposure could occur from ingestion of meat, poultry, eggs or milk from animals fed corn containing the plant-pesticide and from drinking water. While unlikely, meat, eggs or milk from animals fed corn containing the plant-pesticide could contain negligible but finite residues. This is viewed as a remote possibility due to the low Cry9C expression level in corn tissue (3 to 250 µg/gm dry weight), the anticipated degradation and elimination of the Cry9C protein by the animal or the lack of uptake of such a large protein by the animal's intestinal tract. It is not possible to establish with certainty whether finite residues will be incurred, but there is no reasonable expectation of finite residues. However, the best available information on the uptake of intact proteins from the diet would indicate that the intact Cry9C protein would not be available in products from animals fed corn products containing Cry9C protein.

D. Cumulative Effects

The Agency has considered available information on the cumulative effects of such residues and other substances that have a common mechanism of toxicity. These considerations included the cumulative effects on adults as well as on infants and children of such residues and other substances with a common mechanism of toxicity. Since there is no indication of mammalian toxicity to the Cry9C protein from the studies submitted, there is no reason to believe there would be cumulative toxic effects.

E. Safety Determination

The tolerance exemption is limited to residues of the Cry9C protein resulting from feed use only. The basis of safety for this tolerance exemption includes both the results of the acute oral study at high doses indicating no toxicity and the anticipated minimal to nonexistent human dietary exposure of the Cry9C protein via animal feed use. Bt microbial pesticides, containing Cry proteins other than Cry9C, have been applied for more than 30 years to food and feed crops consumed by the U.S. population. There have been no human safety problems attributed to the specific Cry proteins. An oral dose of the tryptic core Cry9C protein of at least 3,760 mg/kg was administered to 10 animals without mortality demonstrating a high degree of safety for the protein. Transient weight loss in three female rodents was observed, but not in any males. Transient weight loss has been observed in similar studies conducted on other purified Cry proteins as well as microbial pesticides and this is not considered a significant adverse effect.

A comparison of the amino acid sequence of the Cry9C protein with those found in the PIR, Swiss-Prot and HIV AA data bases did not reveal any significant homology with known toxins or allergens. The *in vitro* digestibility study showed the Cry9C protein to be stable to pepsin at pH 2.0. The Cry9C protein was shown to be stable to heat at 90 ° C for 10 minutes and the Cry9C protein in corn is the trypsin resistant core and is therefore stable to tryptic digest. The best available information to date would indicate that edible products derived from animals such as meat, milk

and eggs, intended for human consumption, have not been shown to be altered in their allergenicity due to changes in the feed stock utilized. This information would include no transfer of allergenic factors from cattle fed soybeans to the derived meat or milk eaten by individuals with food sensitivity to soybeans.

F. Infants and Children

FFDCA section 408(b)(2)(C) provides that EPA shall assess the available information about consumption patterns among infants and children, special susceptibility of infants and children to pesticide chemical residues and the cumulative effects on infants and children of the residues and other substances with a common mechanism of toxicity. In addition, FFDCA section 408 provides that EPA shall apply an additional tenfold margin of exposure (safety) for infants and children in the case of threshold effects to account for pre- and post-natal toxicity and the completeness of the database unless EPA determines that a different margin of exposure (safety) will be safe for infants and children. In this instance, based on all the available information, the Agency concludes that infants and children will consume only minimal, if any, residues of this plant-pesticide and that there is a finding of no toxicity. Thus, there are no threshold effects of concern and, as a result the provision requiring an additional margin of safety does not apply. Further, the provisions of consumption patterns, special susceptibility, and cumulative effects do not apply.

G. Other Considerations

1. *Analytical method*. The Agency is establishing an exemption from the requirement of a tolerance without any numerical limitation; therefore, the agency has concluded that an analytical method is not required for enforcement purposes for this plant-pesticide.

2. *Effects on the endocrine systems*. EPA does not have any information regarding endocrine effects for these kinds of pesticides at this time. The Agency is not requiring information on the endocrine effects of these plant-pesticides at this time; and Congress allowed 3 years after August 3, 1996, for the Agency to implement a screening and testing program with respect to endocrine effects.

H. Existing Tolerances

A temporary exemption from the requirement of a tolerance for residues of *Bacillus thuringiensis* subsp. *tolworthi* Cry9C and the genetic material necessary for the production of this protein in corn, only in corn used for feed; as well as in meat, poultry, milk, or eggs resulting from animals fed such feed was established on April 10, 1998 under 40 CFR 180.1192 [63 FR 69]. The exemption from the requirement of a tolerance in this rule makes permanent the temporary tolerance exemption of 40 CFR 180.1192.

II. Conclusion

Based on the toxicology data cited and the limited exposure expected with animal feed use, there is reasonable certainty that no harm will result from aggregate exposure to the U.S. population, including infants and children, to residues of *Bacillus thuringiensis* subspecies *tolworthi* Cry9C protein and the genetic material necessary for its production in corn. This includes all anticipated dietary exposures and all other exposures for which there is reliable information. The Agency has arrived at this conclusion because, as discussed above, the temporary tolerance exemption is limited to feed use only. The conclusion of safety is supported by the lack of toxicity after administration of a high oral dose (3,760 mg/kg), the lack of homology to known toxins or allergens, and the minimal to nonexistent exposure via dietary and non-dietary routes. This exemption from the requirement of a tolerance will be revoked if any experience with or scientific data on this pesticide indicate that the tolerance is not safe.

III. Objections and Hearing Requests

The new FFDCA section 408(g) provides essentially the same process for persons to ''object'' to a tolerance exemption regulation issued by EPA under new section 408(e) as was provided in the old section 408. However, the period for filing objections is 60 days, rather than 30 days. EPA currently has procedural regulations which govern the submission of objections and hearing requests. These regulations will require some modification to reflect the new law. However, until those modifications can be made, EPA will continue to use those procedural regulations with appropriate adjustments to reflect the new law.

Any person adversely affected by this regulation may by June 22, 1998, file written objections to the regulation and may also request a hearing on those objections. Objections and hearing requests must be filed with the Hearing Clerk, at the address given above (40 CFR 178.20). A copy of the objections and/or hearing requests filed with the Hearing Clerk should be submitted to the OPP docket for this rulemaking. The objections submitted must specify the provisions of the regulation deemed objectionable and the grounds for the objections (40 CFR 178.25). Each objection must be accompanied by the fee prescribed by 40 CFR 180.33(i). If a hearing is requested, the objections must include a statement of the factual issue(s) on which a hearing is requested, the requestor's contentions on such issues, and a summary of any evidence relied upon by the objector (40 CFR 178.27). A request for a hearing will be granted if the Administrator determines that the material submitted shows the following: There is genuine and substantial issue of fact; there is a reasonable possibility that available evidence identified by the requestor would, if established, resolve one or more of such issues in favor of the requestor, taking into account uncontested claims or facts to the contrary; and resolution of the factual issue(s) in the manner sought by the requestor would be adequate to justify the action requested (40 CFR 178.32). Information submitted in connection with an objection or hearing request may be claimed confidential by marking any part or all of that information as CBI. Information so marked will not be disclosed except in accordance with procedures set forth in 40 CFR Part 2. A copy of the information that does not contain CBI must be submitted for inclusion in the public record. Information not marked confidential may be disclosed publicly by EPA without prior notice.

IV. Public Record and Electronic Submissions

EPA has established a record for this rulemaking under docket control number [OPP–300659] (including any comments and data submitted electronically). A public version of this record, including printed, paper versions of electronic comments, which does not include any information claimed as CBI, is available for inspection from 8:30 a.m. to 4 p.m., Monday through Friday, excluding legal holidays. The public record is located in Room 119 of the Public Information and Records Integrity Branch, Information Resources and Services, Division (7502C), Office of Pesticide Programs, Environmental Protection Agency, Crystal Mall #2, 1921 Jefferson Davis Highway, Arlington, VA.

Electronic comments may be sent directly to EPA at:

opp-docket@epamail.epa.gov.

Electronic comments must be submitted as an ASCII file avoiding the use of special characters and any form of encryption. The official record for

this rulemaking, as well as the public version, as described above will be kept in paper form. Accordingly, EPA will transfer any copies of objections and hearing requests received electronically into printed, paper form as they are received and will place the paper copies in the official rulemaking record which will also include all comments submitted directly in writing. The official rulemaking record is the paper record maintained at the Virginia address in ''ADDRESSES'' at the beginning of this document.

V. Regulatory Assessment Requirements

This final rule establishes an exemption from the tolerance requirement under FFDCA section 408(d) in response to a petition submitted to the Agency. The Office of Management and Budget (OMB) has exempted these types of actions from review under Executive Order 12866, entitled Regulatory Planning and Review (58 FR 51735, October 4, 1993). This final rule does not contain any information collections subject to OMB approval under the Paperwork Reduction Act (PRA), 44 U.S.C. 3501 et seq., or impose any enforceable duty or contain any unfunded mandate as described under Title II of the Unfunded Mandates Reform Act of 1995 (UMRA) (Pub. L. 104–4). Nor does it require any prior consultation as specified by Executive Order 12875, entitled Enhancing the Intergovernmental Partnership (58 FR 58093, October 28, 1993), or special considerations as required by Executive Order 12898, entitled Federal Actions to Address Environmental Justice in Minority Populations and Low-Income Populations (59 FR 7629, February 16, 1994), or require OMB review in accordance with Executive Order 13045, entitled Protection of Children from Environmental Health Risks and Safety Risks (62 FR 19885, April 23, 1997).

In addition, since tolerances and exemptions that are established on the basis of a petition under FFDCA section 408(d), such as the exemption in this final rule, do not require the issuance of a proposed rule, the requirements of the Regulatory Flexibility Act (RFA) (5 U.S.C. 601 et seq.) do not apply. Nevertheless, the Agency previously assessed whether establishing tolerances, exemptions from tolerances, raising tolerance levels or expanding exemptions might adversely impact small entities and concluded, as a generic matter, that there is no adverse economic impact. The factual basis for the Agency's generic certification for tolerance actions published on May 4, 1981 (46 FR 24950), and was provided to the Chief Counsel for Advocacy of the Small Business Administration.

VI. Submission to Congress and the General Accounting Office

Under 5 U.S.C. 801(a)(1)(A), as added by the Small Business Regulatory Enforcement Fairness Act of 1996, the Agency has submitted a report containing this rule and other required information to the U.S. Senate, the U.S. House of Representatives, and the Comptroller General of the General Accounting Office prior to publication of this rule in today's **Federal Register**. This is not a ''major rule'' as defined by 5 U.S.C. 804(2).

List of Subjects in 40 CFR Part 180

Environmental protection, Administrative practice and procedure, Agricultural commodities, Pesticides and pests, Reporting and recordkeeping requirements.

Dated: May 11, 1998.

Marcia E. Mulkey,

Director, Office of Pesticide Programs.

Therefore, 40 CFR chapter I is amended as follows:

PART 180—[AMENDED]

1. The authority citation for part 180 continues to read as follows:

Authority: 21 U.S.C. 346a and 371

2. Section 180.1192 is revised to read as follows:

§ 180.1192 Bacillus thuringiensis subspecies tolworthi Cry9C protein and the genetic material necessary for its production in corn; exemption from the requirement of a tolerance.

The plant-pesticide *Bacillus thuringiensis* subspecies *tolworthi* Cry9C protein and the genetic material necessary for its production in corn is exempted from the requirement of a tolerance for residues, only in corn used for feed; as well as in meat, poultry, milk, or eggs resulting from animals fed such feed.

[FR Doc. 98–13604 Filed 5–21–98; 8:45 am]

BILLING CODE 6560–50–F

FEDERAL EMERGENCY MANAGEMENT AGENCY

44 CFR Part 65

[Docket No. FEMA–7244]

Changes in Flood Elevation Determinations

AGENCY: Federal Emergency Management Agency (FEMA).

ACTION: Interim rule.

SUMMARY: This interim rule lists communities where modification of the base (1% annual chance) flood elevations is appropriate because of new scientific or technical data. New flood insurance premium rates will be calculated from the modified base flood elevations for new buildings and their contents.

DATES: These modified base flood elevations are currently in effect on the dates listed in the table and revise the Flood Insurance Rate Map(s) in effect prior to this determination for each listed community.

From the date of the second publication of these changes in a newspaper of local circulation, any person has ninety (90) days in which to request through the community that the Associate Director for Mitigation reconsider the changes. The modified elevations may be changed during the 90-day period.

ADDRESSES: The modified base flood elevations for each community are available for inspection at the office of the Chief Executive Officer of each community. The respective addresses are listed in the following table.

FOR FURTHER INFORMATION CONTACT: Matthew B. Miller, P.E., Chief, Hazards Study Branch, Mitigation Directorate, 500 C Street SW., Washington, DC 20472, (202) 646–3461.

SUPPLEMENTARY INFORMATION: The modified base flood elevations are not listed for each community in this interim rule. However, the address of the Chief Executive Officer of the community where the modified base flood elevation determinations are available for inspection is provided.

Any request for reconsideration must be based upon knowledge of changed conditions, or upon new scientific or technical data.

The modifications are made pursuant to Section 201 of the Flood Disaster Protection Act of 1973, 42 U.S.C. 4105, and are in accordance with the National Flood Insurance Act of 1968, 42 U.S.C. 4001 *et seq.*, and with 44 CFR Part 65.

For rating purposes, the currently effective community number is shown and must be used for all new policies and renewals.

The modified base flood elevations are the basis for the floodplain management measures that the community is required to either adopt or to show evidence of being already in effect in order to qualify or to remain qualified for participation in the National Flood Insurance Program (NFIP).

These modified elevations, together with the floodplain management criteria required by 44 CFR 60.3, are the minimum that are required. They should not be construed to mean that the community must change any existing ordinances that are more stringent in their floodplain management requirements. The community may at any time enact stricter requirements of its own, or pursuant to policies established by other Federal, State, or regional entities.

The changes in base flood elevations are in accordance with 44 CFR 65.4.

National Environmental Policy Act.

This rule is categorically excluded from the requirements of 44 CFR Part 10, Environmental Consideration. No environmental impact assessment has been prepared.

Regulatory Flexibility Act.

The Associate Director for Mitigation certifies that this rule is exempt from the requirements of the Regulatory Flexibility Act because modified base flood elevations are required by the Flood Disaster Protection Act of 1973, 42 U.S.C. 4105, and are required to maintain community eligibility in the NFIP. No regulatory flexibility analysis has been prepared.

Regulatory Classification.

This interim rule is not a significant regulatory action under the criteria of Section 3(f) of Executive Order 12866 of September 30, 1993, Regulatory Planning and Review, 58 FR 51735.

Executive Order 12612, Federalism.

This rule involves no policies that have federalism implications under Executive Order 12612, Federalism, dated October 26, 1987.

Executive Order 12778, Civil Justice Reform.

This rule meets the applicable standards of Section 2(b)(2) of Executive Order 12778.

List of Subjects in 44 CFR Part 65

Flood insurance, Floodplains, Reporting and recordkeeping requirements.

Accordingly, 44 CFR part 65 is amended to read as follows:

PART 65—[AMENDED]

1. The authority citation for part 65 continues to read as follows:

Authority: 42 U.S.C. 4001 *et seq.*; Reorganization Plan No. 3 of 1978, 3 CFR, 1978 Comp., p. 329; E.O. 12127, 44 FR 19367, 3 CFR, 1979 Comp., p. 376.

§ 65.4 [Amended]

2. The tables published under the authority of § 65.4 are amended as follows:

State and county	Location	Dates and name of newspaper where notice was published	Chief executive officer of community	Effective date of modification	Community No.
Arizona:					
Yavapai	Town of Cottonwood.	April 22, 1998, April 29, 1998, The Verde Independent.	The Honorable Ruben Jauregui, Mayor, Town of Cottonwood, 827 North Main Street, Cottonwood, Arizona 86326.	March 12, 1998	040096
Navajo	City of Holbrook	April 15, 1998, April 22, 1998, Holbrook Tribune-News.	The Honorable Claudia Maestas, Mayor, City of Holbrook, P.O. Box 70, Holbrook, Arizona 86025.	March 20, 1998	040067
Navajo	Unincorporated Areas.	April 15, 1998, April 22, 1998, Holbrook Tribune-News.	The Honorable Lewis Tenney, Chairperson, Navajo County Board of Supervisors, P.O. Box 668, Holbrook, Arizona 86025.	March 20, 1998	040066
Maricopa	City of Phoenix	February 20, 1998, February 27, 1998, The Arizona Republic.	The Honorable Skip Rimsza, Mayor, City of Phoenix, 200 West Washington Street, Phoenix, Arizona 85003–1611.	February 3, 1998	040051
California:					
San Bernardino	City of Colton	February 19, 1998, February 26, 1998, The Colton Courier.	The Honorable Karl E. Gayton, Mayor, City of Colton, 650 North La Cadena Drive, Colton, California 92324.	January 21, 1998	060273
Orange	City of Fullerton	April 16, 1998, April 23, 1998, Fullerton News-Tribune.	The Honorable Don Bankhead, Mayor, City of Fullerton, 303 West Commonwealth Avenue, Fullerton, California 92832.	March 13, 1998	060219
Sacramento	Unincorporated Areas.	February 20, 1998, February 27, 1998, Sacramento Bee.	The Honorable Illa Collin, Chairperson, Sacramento County Board of Supervisors, 700 H Street, Room 2450, Sacramento, California 95814.	January 28, 1998	060262
San Bernardino	City of San Bernardino.	February 19, 1998, February 26, 1998, The Sun.	The Honorable Tom Minor, Mayor, City of San Bernardino, 300 North D Street, San Bernardino, California 92418.	January 21, 1998	060281
Colorado:					
Arapahoe	Unincorported Areas.	March 12, 1998, March 19, 1998, Littleton Independent.	The Honorable Polly Page, Chairperson, Arapahoe County Board of Commissioners, 5334 South Prince Street, Littleton, Colorado 80166.	February 18, 1998	080011

State and county	Location	Dates and name of newspaper where notice was published	Chief executive officer of community	Effective date of modification	Community No.
Arapahoe	Town of Columbine Valley.	March 12, 1998, March 19, 1998, Littleton Independent.	The Honorable Michael J. Tanner, Mayor, Town of Columbine Valley, 5931 South Middlefield Road, Suite 101, Columbine Valley, Colorado 80123.	February 18, 1998	080014
Arapahoe	Town of Columbine Valley.	March 19, 1998, March 26, 1998, Littleton Independent.	The Honorable Michael J. Tanner, Mayor, Town of Columbine Valley, 5931 South Middlefield Road, Suite 101, Columbine Valley, Colorado 80123.	March 6, 1998	080014
Douglas	Unincorporated Areas.	February 18, 1998, February 25, 1998, Douglas County News Press.	The Honorable M. Michael Cooke, Chairman, Douglas County Board of Commissioners, 101 Third Street, Castle Rock, Colorado 80104.	February 6, 1998	080049
Jefferson	City of Golden	April 17, 1998 April 24, 1998 *Golden Transcript*.	The Honorable Jan Schenck, Mayor, City of Golden, 911 Tenth Street, Golden, Colorado 80401.	March 24, 1998	080090
Jefferson	Unincorporated Areas.	April 15, 1998 April 22, 1998 *Columbine Community Courier*.	The Honorable Michelle Lawrence, Chairperson, Jefferson County Board of Commissioners, 100 Jefferson County Parkway, Suite 5550, Golden, Colorado 80419.	March 20, 1998	080087
Jefferson	Unincorporated Areas.	April 17, 1998 April 24, 1998 *Golden Transcript*.	The Honorable Michelle Lawrence, Chairperson, Jefferson County Board of Commissioners, 100 Jefferson County Parkway, Suite 5550, Golden, Colorado 80419.	March 24, 1998	080087
Arapachoe	City of Littleton	March 12, 1998 March 19, 1998 *Littleton Independent*.	The Honorable Pat Cronenberger, Mayor, City of Littleton, 2255 West Berry Avenue, Littleton, Colorado 80165.	February 18, 1998	080017
Arapahoe	City of Littleton	March 19, 1998 March 26, 1998 *Littleton Independent*.	The Honorable Pat Cronenberger, Mayor, City of Littleton, 2255 West Berry Avenue, Littleton, Colorado 80165.	March 6, 1998	080017
Iowa:					
Polk	City of Grimes	March 5, 1998 March 12, 1998 *Northeast Dallas County Record*.	The Honorable Brad Long, Mayor, City of Grimes, P.O. Box 460, Grimes, Iowa 50111.	February 6, 1998	190228
Kansas:					
Sedgwick	City of Wichita	March 13, 1998 March 20, 1998 *Wichita Eagle*.	The Honorable Bob Knight, Mayor, City of Wichita, City Hall, 455 North Main Street, Wichita, Kansas 67202.	February 19, 1998	200328
Sedgwick	City of Wichita	April 23, 1998 April 30, 1998 *Wichita Eagle*.	The Honorable Bob Knight, Mayor, City of Wichita, City Hall, 455 North Main Street, Wichita, Kansas 67202.	March 18, 1998	200328
Nebraska:					
Lancaster	City of Lincoln	March 12, 1998 March 19, 1998 *Lincoln Journal Star*.	The Honorable Mike Johanns, Mayor, City of Lincoln, 555 South 10th Street, Lincoln, Nebraska 68508.	February 17, 1998	315273
New Mexico:					
Bernalillo	City of Albuquerque.	February 6, 1998 February 13, 1998 *The Albuquerque Journal*.	The Honorable Martin J. Chávez, Mayor, City of Albuquerque, P.O. Box 1293, Albuquerque, New Mexico 87103.	January 26, 1998	350002
Bernalillo	City of Albuquerque.	April 29, 1998 May 6, 1998 *Albuquerque Journal*.	The Honorable Martin J. Chávez, Mayor, City of Albuquerque, P.O. Box 1293, Albuquerque, New Mexico 87103.	March 25, 1998	350002
Eddy	City of Artesia	February 3, 1998 February 10, 1998 *Artesia Daily Press*.	The Honorable Ernest Thompson, Mayor, City of Artesia, P.O. Box 1310, Artesia, New Mexico 88211–1310.	January 12, 1998	350016
Bernalillo	Unincorporated Areas.	February 6, 1998 February 13, 1998 *The Albuquerque Journal*.	The Honorable Tom Rutherford, Chairman, Bernalillo County, Board of Commissioners, 2400 Broadway Southeast, Albuquerque, New Mexico 87102.	January 26, 1998	350001

State and county	Location	Dates and name of newspaper where notice was published	Chief executive officer of community	Effective date of modification	Community No.
Bernalillo	Unincorporated Areas.	March 18, 1998 March 25, 1998 *The Albuquerque Journal*.	The Honorable Tom Rutherford, Chairman, Bernalillo County, Board of Commissioners, 2400 Broadway Southeast, Albuquerque, New Mexico 87102.	February 27, 1998	350001
Eddy	City of Carlsbad	March 13, 1998 March 20, 1998 *Current Argus*.	The Honorable Gary L. Perkowski, Mayor, City of Carlsbad, P.O. Box 1569, Carlsbad, New Mexico 88221–1569.	February 20, 1998	350017
Eddy	Unincorporated Areas.	March 13, 1998 March 20, 1998 *Current Argus*.	The Honorable Stephen Massey, County Manager, Eddy County, P.O. Box 1139, Carlsbad, New Mexico 88221–1139.	February 20, 1998	350120
Oklahoma:					
Garfield	City of Enid	April 16, 1998 April 23, 1998 *Enid News and Eagle*.	The Honorable Mike Cooper, Mayor, City of Enid, P.O. Box 1768, Enid, Oklahoma 73702.	March 13, 1998	400062
Cleveland	City of Norman	March 3, 1998 March 10, 1998 *Norman Transcript*.	The Honorable Bill Nations, Mayor, City of Norman, P.O. Box 370, Norman, Oklahoma 73070–0370.	February 13, 1998	400046
Garfield	Town of North Enid.	April 16, 1998 April 23, 1998 *Enid News and Eagle*.	The Honorable Chris Scott, Mayor, Town of North Enid, 220 Redwood, North Enid, Oklahoma 73701.	March 13, 1998	400425
Tulsa	City of Tulsa	April 16, 1998 April 23, 1998 *Tulsa World*.	The Honorable M. Susan Savage, Mayor, City of Tulsa, 200 Civic Center, Tulsa, Oklahoma 74103.	March 16, 1998	405381
Oregon:					
Jackson	Unincorporated Areas.	March 12, 1998 March 19, 1998 *Medford Mail-Tribune*.	The Honorable Sue Kupillas, Chairperson, Jackson County, Board of Commissioners, 10 South Oakdale, Room 200, Medford, Oregon 97501.	June 17, 1998	415589
Jackson	City of Medford	March 12, 1998 March 19, 1998 *Medford Mail-Tribune*.	The Honorable Jerry Lausmann, Mayor, City of Medford, 411 West Eighth Street, Medford, Oregon 97501.	June 17, 1998	410096
Clackamas	City of West Linn	April 16, 1998 April 23, 1998 *West Linn Tidings*.	The Honorable Jill Thorn, Mayor, City of West Linn, P.O. Box 48, West Linn, Oregon 97068–0048.	March 24, 1998	410024
Texas:					
Collin	City of Allen	February 4, 1998 February 11, 1998 *Plano Star Courier*.	The Honorable Kevin Lilly, Mayor, City of Allen, One Butler Circle, Allen, Texas 75013.	January 9, 1998	480131
Potter and Randall.	City of Amarillo	February 19, 1998, February 26, 1998, *Amarillo Daily News*.	The Honorable Kel Seliger, Mayor, City of Amarillo, P.O. Box 1971, Amarillo, Texas 79150.	January 30, 1998	480529
Williamson	City of Cedar Park	March 18, 1998, March 25, 1998, *Hill Country News*.	The Honorable Dorothy Duckett, Mayor, City of Cedar Park, City Hall, 600 North Bell Boulevard, Cedar Park, Texas 78613.	March 5, 1998	481282
Bexar, Comal, and Guadalupe.	City of Cibolo	March 12, 1998, March 19, 1998, *The Herald*.	The Honorable Sam Bauder, Mayor, City of Cibolo, P.O. Box 88, Cibolo, Texas 78108.	February 11, 1998	480267
Collin, Dallas, Denton, Kaufman, and Rockwall.	City of Dallas	February 3, 1998, February 10, , 1998, *Dallas Morning News*.	The Honorable Ron Kirk, Mayor, City of Dallas, 1500 Marilla Street, Suite 5EN, Dallas, Texas 75201.	January 20, 1998	480171
Dallas	City of Dallas	April 1, 1998, April 8, 1998, *Dallas Morning News*.	The Honorable Ron Kirk, Mayor, City of Dallas, 1500 Marilla Street, Suite 5EN, Dallas, Texas 75201.	July 7, 1998	480171
El Paso	City of El Paso	February 3, 1998, February 10, 1998, *El Paso Times*.	The Honorable Carlos M. Ramirez, Mayor, City of El Paso, Two Civic Center Plaza, El Paso, Texas 79901–1196.	January 16, 1998	480214
El Paso	City of El Paso	April 23, 1998, April 30, 1998, *El Paso Times*.	The Honorable Carlos M. Ramirez, Mayor, City of El Paso, Two Civic Center Plaza, El Paso, Texas 79901–1196.	March 23, 1998	480214

State and county	Location	Dates and name of newspaper where notice was published	Chief executive officer of community	Effective date of modification	Community No.
Dallas	City of Farmers Branch.	April 3, 1998, April 10, 1998, *Metro Crest News*.	The Honorable Bob Phelps, Mayor, City of Farmers Branch, P.O. Box 819010, Farmers Branch, Texas 75381–9010.	July 9, 1998	480174
Tarrant	City of Fort Worth	February 5, 1998, February 12, 1998, *Fort Worth Star-Telegram*.	The Honorable Kenneth Barr, Mayor, City of Fort Worth, City Hall, 1000 Throckmorton Street, Fort Worth, Texas 76102–6311.	January 20, 1998	480596
Tarrant	City of Fort Worth	April 17, 1998, April 24, 1998, *Fort Worth Star-Telegram*.	The Honorable Kenneth Barr, Mayor, City of Fort Worth, City Hall, 1000 Throckmorton Street, Fort Worth, Texas 76102–6311.	March 12, 1998	480596
Dallas	City of Grand Prairie.	March 19, 1998, March 26, 1998, *Grand Prairie News*.	The Honorable Charles England, Mayor, City of Grand Prairie, P.O. Box 534045, Grand Prairie, Texas 75053–4045.	February 25, 1998	485472
Harris	Unincorporated Areas.	February 18, 1998, February 25, 1998, *Houston Chronicle*.	The Honorable Robert Eckels, Harris County Judge, 1001 Preston Street, Suite 911, Houston, Texas 77002.	May 4, 1998	480287
Tarrant	City of Hurst	April 21, 1998 April 28, 1998 *Dallas Morning News*	The Honorable Bill Souder, Mayor, City of Hurst, 1505 Precinct Line Road, Hurst, Texas 76054.	March 24, 1998	48061
Collin	City of Plano	February 4, 1998 February 11, 1998 *Plano Star Courier*	The Honorable John Longstreet, Mayor, City of Plano, P.O. Box 860358, Plano, Texas 75086–0358.	January 9, 1998	480140
Collin	City of Plano	April 22, 1998 April 29, 1998 *Plano Star Courier*	The Honorable John Longstreet, Mayor, City of Plano, P.O. Box 860358, Plano, Texas 75086–0358.	March 19, 1998	480140
Collin	City of Plano	April 22, 1998 April 29, 1998 *Plano Star Courier*	The Honorable John Longstreet, Mayor, City of Plano, P.O. Box 860358, Plano, Texas 75086–0358.	March 19, 1998	480140
Bexar, Comal, and Guadalupe.	City of Schertz	March 12, 1998 March 19, 1998 *The Herald*	The Honorable Hal Baldwin, Mayor, City of Schertz, P.O. Drawer I, Schertz, Texas 78154.	February 11, 1998	480269
Washington:					
Columbia	Unincorporated Areas.	March 4, 1998 March 11, 1998 *Dayton Chronicle*	The Honorable Charles G. Reeves, Chairman, Columbia County, Board of Commissioners, 341 East Main, Dayton, Washington 99328.	June 9, 1998	530029
Pierce	City of Orting	March 17, 1998 March 24, 1998 *Pierce County Herald*	The Honorable Guy S. Colorossi, Mayor, City of Orting, P.O. Box 489, Orting, Washington 98360–0489.	February 26, 1998	530143

(Catalog of Federal Domestic Assistance No. 83.100, ''Flood Insurance'')

Dated: May 11, 1998.

Michael J. Armstrong,

Associate Director for Mitigation.

[FR Doc. 98–13735 Filed 5–21–98; 8:45 am]

BILLING CODE 6718–04–P

FEDERAL EMERGENCY MANAGEMENT AGENCY

44 CFR Part 65

[Docket No. FEMA–7257]

Changes in Flood Elevation Determinations

AGENCY: Federal Emergency Management Agency, FEMA.

ACTION: Interim rule.

SUMMARY: This interim rule lists communities where modification of the base (1% annual chance) flood elevations is appropriate because of new scientific or technical data. New flood insurance premium rates will be calculated from the modified base flood elevations for new buildings and their contents.

DATES: These modified base flood elevations are currently in effect on the dates listed in the table and revise the Flood Insurance Rate Map(s) (FIRMs) in effect prior to this determination for each listed community.

From the date of the second publication of these changes in a newspaper of local circulation, any person has ninety (90) days in which to request through the community that the Associate Director reconsider the changes. The modified elevations may be changed during the 90-day period.

ADDRESSES: The modified base flood elevations for each community are available for inspection at the office of the Chief Executive Officer of each community. The respective addresses are listed in the following table.

FOR FURTHER INFORMATION CONTACT: Matthew B. Miller, P.E., Chief, Hazards Study Branch, Mitigation Directorate, 500 C Street SW., Washington, DC 20472, (202) 646–3461.

SUPPLEMENTARY INFORMATION: The modified base flood elevations are not listed for each community in this interim rule. However, the address of the Chief Executive Officer of the community where the modified base flood elevation determinations are available for inspection is provided.

Any request for reconsideration must be based upon knowledge of changed conditions, or upon new scientific or technical data.

The modifications are made pursuant to section 201 of the Flood Disaster Protection Act of 1973, 42 U.S.C. 4105, and are in accordance with the National Flood Insurance Act of 1968, 42 U.S.C. 4001 *et seq.*, and with 44 CFR part 65.

For rating purposes, the currently effective community number is shown and must be used for all new policies and renewals.

The modified base flood elevations are the basis for the floodplain management measures that the community is required to either adopt or to show evidence of being already in effect in order to qualify or to remain qualified for participation in the National Flood Insurance Program.

These modified elevations, together with the floodplain management criteria required by 44 CFR 60.3, are the minimum that are required. They should not be construed to mean that the community must change any existing ordinances that are more stringent in their floodplain management requirements. The community may at any time enact stricter requirements of its own, or pursuant to policies established by other Federal, state or regional entities.

The changes in base flood elevations are in accordance with 44 CFR 65.4.

National Environmental Policy Act

This rule is categorically excluded from the requirements of 44 CFR Part 10, Environmental Consideration. No environmental impact assessment has been prepared.

Regulatory Flexibility Act

The Associate Director, Mitigation Directorate, certifies that this rule is exempt from the requirements of the Regulatory Flexibility Act because modified base flood elevations are required by the Flood Disaster Protection Act of 1973, 42 U.S.C. 4105, and are required to maintain community eligibility in the National Flood Insurance Program. No regulatory flexibility analysis has been prepared.

Regulatory Classification

This interim rule is not a significant regulatory action under the criteria of section 3(f) of Executive Order 12866 of September 30, 1993, Regulatory Planning and Review, 58 FR 51735.

Executive Order 12612, Federalism

This rule involves no policies that have federalism implications under Executive Order 12612, Federalism, dated October 26, 1987.

Executive Order 12778, Civil Justice Reform

This rule meets the applicable standards of section 2(b)(2) of Executive Order 12778.

List of Subjects in 44 CFR Part 65

Flood insurance, Floodplains, Reporting and recordkeeping requirements. Accordingly, 44 CFR part 65 is amended to read as follows:

PART 65—[AMENDED]

1. The authority citation for part 65 continues to read as follows:

Authority: 42 U.S.C. 4001 et seq.; Reorganization Plan No. 3 of 1978, 3 CFR, 1978 Comp., p. 329; E.O. 12127, 44 FR 19367, 3 CFR, 1979 Comp., p. 376.

§ 65.4 [Amended]

2. The tables published under the authority of § 65.4 are amended as follows:

State and county	Location	Dates and name of newspaper where notice was published	Chief executive officer of community	Effective date of modification	Community No.
Connecticut: Fairfield.	City of Stamford ...	March 18, 1998, March 25, 1998, *The Advocate*.	The Honorable Dannel P. Malloy, Mayor of the City of Stamford, 888 Washington Boulevard, P.O. Box 10152, Stamford, Connecticut 06904–2152.	June 23, 1998	090015 C
Florida: Charlotte ...	Unincorporated areas.	April 13, 1998, April 20, 1998, *Sarasota Herald-Charlotte AM Edition*.	Mr. Matthew D. DeBoer, Chairman of the Charlotte County Board of Commissioners, 18500 Murdock Road, Room 536, Port Charlotte, Florida 33948–1094.	April 7, 1998	120061 E
Illinois: Lake	Village of Beach Park.	March 27, 1998, April 3, 1998, *The News-Sun*.	The Honorable Milton Jensen, Mayor of the Village of Beach Park, 11270 West Wadsworth Road, Beach Park, Illinois 60099.	March 19, 1998	171022 F
Indiana: Marion	City of Indianapolis.	March 17, 1998, March 24, 1998, *The Indianapolis Star*.	The Honorable Stephen Goldsmith, Mayor of the City of Indianapolis, 200 East Washington Street, City-County Building, Suite 2501, Indianapolis, Indiana 46204–3357.	March 2, 1998	180159 D
New Jersey: Ocean	Township of Dover	April 8, 1998, April 15, 1998, *Ocean County Observer*.	The Honorable George Wittmann, Mayor of the Township of Dover, P.O. Box 728, Toms River, New Jersey 08754.	July 14, 1998	345293 D
North Carolina: Dare.	Unincorporated areas.	March 3, 1998, March 10, 1998, *The Coastland Times*.	Ms. Geneva H. Perry, Chairwoman of the Dare County Board of Commissioners, P.O. Box 1000, Manteo, North Carolina 27954.	February 24, 1998	375348 E
Ohio:					
Warren	City of Springboro	April 14, 1998, April 21, 1998, *The Star Press*.	The Honorable Ray Wellbrock, Mayor of the City of Springboro, 320 West Central Avenue, Springboro, Ohio 45066.	October 6, 1998 ...	390564 B
Warren	Unincorporated areas.	April 14, 1998, April 21, 1998, *The Star Press*.	Mr. C. Michael Kilburn, President, Warren County Board of Commissioners, 320 East Silver Street, Lebanon, Ohio 45036.	October 6, 1998 ...	390757 B

State and county	Location	Dates and name of newspaper where notice was published	Chief executive officer of community	Effective date of modification	Community No.
Tennessee: Metropolitan Government.	City of Nashville and Davidson County.	April 6, 1998, April 13, 1998, *The Tennessean*.	The Honorable Philip Bredesen, Mayor of the Metropolitan Government of Nashville and Davidson County, 107 Metropolitan Courthouse, Nashville, Tennessee 37201.	March 31, 1998	470040 B

(Catalog of Federal Domestic Assistance No. 83.100, ''Flood Insurance.'')

Dated: May 11, 1998.

Michael J. Armstrong,

Associate Director for Mitigation.

[FR Doc. 98–13734 Filed 5–21–98; 8:45 am]

BILLING CODE 6718–03–P

FEDERAL EMERGENCY MANAGEMENT AGENCY

44 CFR Part 65

Changes in Flood Elevation Determinations

AGENCY: Federal Emergency Management Agency, FEMA.

ACTION: Final rule.

SUMMARY: Modified base (1% annual chance) flood elevations are finalized for the communities listed below. These modified elevations will be used to calculate flood insurance premium rates for new buildings and their contents.

EFFECTIVE DATES: The effective dates for these modified base flood elevations are indicated on the following table and revise the Flood Insurance Rate Map(s) (FIRMs) in effect for each listed community prior to this date.

ADDRESSES: The modified base flood elevations for each community are available for inspection at the office of the Chief Executive Officer of each community. The respective addresses are listed in the following table.

FOR FURTHER INFORMATION CONTACT: Matthew B. Miller, P.E., Chief, Hazards Study Branch, Mitigation Directorate, 500 C Street SW., Washington, DC 20472, (202) 646–3461.

SUPPLEMENTARY INFORMATION: The Federal Emergency Management Agency makes the final determinations listed below of modified base flood elevations for each community listed. These modified elevations have been published in newspapers of local circulation and ninety (90) days have elapsed since that publication. The Associate Director has resolved any appeals resulting from this notification.

The modified base flood elevations are not listed for each community in this notice. However, this rule includes the address of the Chief Executive Officer of the community where the modified base flood elevation determinations are available for inspection.

The modifications are made pursuant to section 206 of the Flood Disaster Protection Act of 1973, 42 U.S.C. 4105, and are in accordance with the National Flood Insurance Act of 1968, 42 U.S.C. 4001 *et seq.*, and with 44 CFR part 65.

For rating purposes, the currently effective community number is shown and must be used for all new policies and renewals.

The modified base flood elevations are the basis for the floodplain management measures that the community is required to either adopt or to show evidence of being already in effect in order to qualify or to remain qualified for participation in the National Flood Insurance Program.

These modified elevations, together with the floodplain management criteria required by 44 CFR 60.3, are the minimum that are required. They should not be construed to mean that the community must change any existing ordinances that are more stringent in their floodplain management requirements. The community may at any time enact stricter requirements of its own, or pursuant to policies established by other Federal, state or regional entities.

These modified elevations are used to meet the floodplain management requirements of the NFIP and are also used to calculate the appropriate flood insurance premium rates for new buildings built after these elevations are made final, and for the contents in these buildings.

The changes in base flood elevations are in accordance with 44 CFR 65.4.

National Environmental Policy Act

This rule is categorically excluded from the requirements of 44 CFR Part 10, Environmental Consideration. No environmental impact assessment has been prepared.

Regulatory Flexibility Act

The Associate Director, Mitigation Directorate, certifies that this rule is exempt from the requirements of the Regulatory Flexibility Act because modified base flood elevations are required by the Flood Disaster Protection Act of 1973, 42 U.S.C. 4105, and are required to maintain community eligibility in the National Flood Insurance Program. No regulatory flexibility analysis has been prepared.

Regulatory Classification

This final rule is not a significant regulatory action under the criteria of section 3(f) of Executive Order 12866 of September 30, 1993, Regulatory Planning and Review, 58 FR 51735.

Executive Order 12612, Federalism

This rule involves no policies that have federalism implications under Executive Order 12612, Federalism, dated October 26, 1987.

Executive Order 12778, Civil Justice Reform.

This rule meets the applicable standards of section 2(b)(2) of Executive Order 12778.

List of Subjects in 44 CFR Part 65

Flood insurance, Floodplains, Reporting and recordkeeping requirements.

Accordingly, 44 CFR part 65 is amended to read as follows:

PART 65—[AMENDED]

1. The authority citation for part 65 continues to read as follows:

Authority: 42 U.S.C. 4001 *et seq.*; Reorganization Plan No. 3 of 1978, 3 CFR, 1978 Comp., p. 329; E.O. 12127, 44 FR 19367, 3 CFR, 1979 Comp., p. 376.

§ 65.4 [Amended]

2. The tables published under the authority of § 65.4 are amended as follows:

State and county	Location	Dates and name of newspaper where notice was published	Chief executive officer of community	Effective date of modification	Community No.
Illinois:					
DuPage and Cook (FEMA Docket No. 7233).	Village of Bensenville.	September 3, 1997, September 10, 1997, Press Publications.	Mr. John C. Geils, President of the Village of Bensenville, 700 West Irving Park Road, Bensenville, Illinois 60106.	August 27, 1997 ..	170200 C
Cook (FEMA Docket No. 7243).	Village of Schaumburg.	September 30, 1997, October 7, 1997, Daily Herald.	The Honorable Al Larson, Mayor of the Village of Schaumburg, 101 Schaumburg Court, Schaumburg, Illinois 60193–1899.	January 5, 1998 ...	170158 D

(Catalog of Federal Domestic Assistance No. 83.100, ''Flood Insurance'')

Dated: May 11, 1998.

Michael J. Armstrong,

Associate Director for Mitigation.

[FR Doc. 98–13731 Filed 5–21–98; 8:45 am]

BILLING CODE 6718–03–P

FEDERAL EMERGENCY MANAGEMENT AGENCY

44 CFR Part 65

Changes in Flood Elevation Determinations

AGENCY: Federal Emergency Management Agency (FEMA).

ACTION: Final rule.

SUMMARY: Modified base (1% annual chance) flood elevations are finalized for the communities listed below. These modified elevations will be used to calculate flood insurance premium rates for new buildings and their contents.

EFFECTIVE DATES: The effective dates for these modified base flood elevations are indicated on the following table and revise the Flood Insurance Rate Map(s) in effect for each listed community prior to this date.

ADDRESSES: The modified base flood elevations for each community are available for inspection at the office of the Chief Executive Officer of each community. The respective addresses are listed in the following table.

FOR FURTHER INFORMATION CONTACT: Matthew B. Miller, P.E., Chief, Hazards Study Branch, Mitigation Directorate, 500 C Street SW., Washington, DC 20472, (202) 646–3461.

SUPPLEMENTARY INFORMATION: The Federal Emergency Management Agency makes the final determinations listed below of the final determinations of modified base flood elevations for each community listed. These modified elevations have been published in newspapers of local circulation and ninety (90) days have elapsed since that publication. The Associate Director has resolved any appeals resulting from this notification.

The modified base flood elevations are not listed for each community in this notice. However, this rule includes the address of the Chief Executive Officer of the community where the modified base flood elevation determinations are available for inspection.

The modifications are made pursuant to Section 206 of the Flood Disaster Protection Act of 1973, 42 U.S.C. 4105, and are in accordance with the National Flood Insurance Act of 1968, 42 U.S.C. 4001 *et seq.*, and with 44 CFR part 65.

For rating purposes, the currently effective community number is shown and must be used for all new policies and renewals.

The modified base flood elevations are the basis for the floodplain management measures that the community is required to either adopt or to show evidence of being already in effect in order to qualify or to remain qualified for participation in the National Flood Insurance Program (NFIP).

These modified elevations, together with the floodplain management criteria required by 44 CFR 60.3, are the minimum that are required. They should not be construed to mean that the community must change any existing ordinances that are more stringent in their floodplain management requirements. The community may at any time enact stricter requirements of its own, or pursuant to policies established by other Federal, State, or regional entities.

These modified elevations are used to meet the floodplain management requirements of the NFIP and are also used to calculate the appropriate flood insurance premium rates for new buildings built after these elevations are made final, and for the contents in these buildings.

The changes in base flood elevations are in accordance with 44 CFR 65.4.

National Environmental Policy Act.

This rule is categorically excluded from the requirements of 44 CFR part 10, Environmental Consideration. No environmental impact assessment has been prepared.

Regulatory Flexibility Act.

The Associate Director for Mitigation certifies that this rule is exempt from the requirements of the Regulatory Flexibility Act because modified base flood elevations are required by the Flood Disaster Protection Act of 1973, 42 U.S.C. 4105, and are required to maintain community eligibility in the NFIP. No regulatory flexibility analysis has been prepared.

Regulatory Classification.

This final rule is not a significant regulatory action under the criteria of Section 3(f) of Executive Order 12866 of September 30, 1993, Regulatory Planning and Review, 58 FR 51735.

Executive Order 12612, Federalism.

This rule involves no policies that have federalism implications under Executive Order 12612, Federalism, dated October 26, 1987.

Executive Order 12778, Civil Justice Reform.

This rule meets the applicable standards of Section 2(b)(2) of Executive Order 12778.

List of Subjects in 44 CFR Part 65

Flood insurance, Floodplains, Reporting and recordkeeping requirements.

Accordingly, 44 CFR part 65 is amended to read as follows:

PART 65—[AMENDED]

1. The authority citation for part 65 continues to read as follows:

Authority: 42 U.S.C. 4001 *et seq.*; Reorganization Plan No. 3 of 1978, 3 CFR, 1978 Comp., p. 329; E.O. 12127, 44 FR 19367, 3 CFR, 1979 Comp., p. 376.

§ 65.4 [Amended]

2. The tables published under the authority of § 65.4 are amended as follows:

State and county	Location	Dates and name of newspaper where notice was published	Chief executive officer of community	Effective date of modification	Community No.
Arizona: Maricopa (FEMA Docket No. 7232).	Town of Cave Creek.	November 5, 1997, November 12, 1997, *Foothills Sentinel*.	The Honorable Thomas Augherton, Mayor, Town of Cave Creek, 37622 North Cave Creek Road, Cave Creek, Arizona 85331.	October 20, 1997	040136
Arizona: Maricopa (FEMA Docket No. 7232).	City of El Mirage	November 5, 1997, November 12, 1997, *Daily News-Sun*.	The Honorable Maggie Reese, Mayor, City of El Mirage, P.O. Box 26, El Mirage, Arizona 85335.	October 20, 1997	040041
Arizona: Maricopa (FEMA Docket No. 7232).	Unincorporated Areas.	November 5, 1997, November 12, 1997, *Daily News-Sun*.	The Honorable Don Stapley, Chairperson, Maricopa County Board of Supervisors, 301 West Jefferson Street, Phoenix, Arizona 85003.	October 20, 1997	040037
Arizona: Maricopa (FEMA Docket No. 7236).	Unincorporated Areas.	November 19, 1997, November 26, 1997, *Tempe Tribune*.	The Honorable Don Stapley, Chairpeson, Maricopa County Board of Supervisors, 301 West Jefferson Street, Phoenix, Arizona 85003.	October 20, 1997	040037
Arizona: Maricopa (FEMA Docket No. 7232).	City of Surprise ...	November 5, 1997, November 12, 1997, *Daily News-Sun*.	The Honorable Joan Schafer, Mayor, City of Surprise, 12425 West Bell Road, Suite D–100, Surprise, Arizona 85374.	October 20, 1997	040053
Arizona: Maricopa (FEMA Docket No. 7236).	City of Tempe	November 19, 1997, November 26, 1997, *Tempe Tribune*.	The Honorable Neil Giuliano, Mayor, City of Tempe, P.O. Box 5002, Tempe, Arizona 85280.	October 20, 1997	040054
Arizona: Pima (FEMA Docket No. 7232).	City of Tucson	October 21, 1997, October 28, 1997, *The Arizona Daily Star*.	The Honorable George Miller, Mayor, City of Tucson, P.O. Box 27210, Tucson, Arizona 85726.	October 1, 1997 ..	040076
Arizona: Maricopa (FEMA Docket No. 7232).	Town of Wickenburg.	October 21, 1997, October 28, 1997, *The Arizona Republic*.	The Honorable Dallas Gant, Mayor, Town of Wickenburg, 155 North Tegner Street, Suite A, Wickenburg, Arizona 85390.	October 1, 1997 ..	040056
California: San Diego (FEMA Docket No. 7236).	City of Encinitas ..	December 4, 1997, December 11, 1997, *Encinitas Sun*.	The Honorable John Davis, Mayor, City of Encinitas, 505 South Vulcan Avenue, Encinitas, California 92024.	November 10, 1997.	060726
California: Kern (FEMA Docket No. 7236).	Unincorporated Areas.	November 20, 1997, November 27, 1997, *Mojave Desert News*.	The Honorable Steve Perez, Chairman, Kern County Board of Supervisors, 1115 Truxton Avenue, Fifth Floor, Bakersfield, California 93301.	October 31, 1997	060075
California: Alameda (FEMA Docket No. 7232).	City of Livermore	September 10, 1997, September 17, 1997, *The Independent*.	The Honorable Cathie Brown, Mayor, City of Livermore, 1052 South Livermore Avenue, Livermore, California 94550.	August 14, 1997 ..	060008
Riverside (FEMA Docket No. 7232).	City of Murrieta	October 9, 1997, October 16, 1997, *The Californian*.	The Honorable Gary Smith, Mayor, City of Murrieta, 26442 Beckman Court, Murrieta, California 92562.	September 11, 1997.	060751
Sonoma (FEMA Docket No. 7236).	City of Petaluma ..	December 2, 1997, December 9, 1997, *Argus Courier*.	The Honorable Patricia Hilligoss, Mayor, City of Petaluma, P.O. Box 61, Petaluma, California 94953–0061.	November 6, 1997	060379
San Diego (FEMA Docket No. 7232).	City of Poway	October 16, 1997, October 23, 1997, *Poway News Chieftain*.	The Honorable Don Higginson, Mayor, City of Poway, 13325 Civic Center Drive, Poway, California 92064.	January 22,1997	060702

State and county	Location	Dates and name of newspaper where notice was published	Chief executive officer of community	Effective date of modification	Community No.
Placer (FEMA Docket No. 7236).	City of Roseville ..	November 12, 1997, November 19, 1997, *The Press-Tribune*.	The Honorable Claudia Gamar, Mayor, City of Roseville, 311 Vernon Street, Suite 200, Roseville, California 95678.	October 20, 1997	060243
San Mateo (FEMA Docket No. 7236).	City of San Carlos	December 16, 1997, December 23, 1997, *San Mateo Times*.	The Honorable Sally Mitchell, Mayor, City of San Carlos, 600 Elm Street, San Carlos, California 94070.	November 12, 1997.	060327
San Diego (FEMA Docket No. 7236).	Unincorporated Areas.	November 13, 1997, November 20, 1997, *San Diego Union-Tribune*.	The Honorable Bill Horn, Chairman, San Diego County Board of Supervisors, 1600 Pacific Highway, San Diego, California 92101.	February 18, 1998	060284
San Diego (FEMA Docket No. 7236).	Unincorporated Areas.	November 21, 1997, November 28, 1997, *San Diego Union-Tribune*.	The Honorable Bill Horn, Chairman, San Diego County Board of Supervisors, 1600 Pacific Highway, San Diego, California 92101.	February 26, 1997	060284
San Diego (FEMA Docket No. 7236).	Unincorporated Areas.	December 4, 1997, December 11, 1997, *San Diego Union Tribune*.	The Honorable Bill Horn, Chairman, San Diego County Board of Supervisors, 1600 Pacific Highway, Room 335, San Diego, California 92101.	November 10, 1997.	060284
Santa Barbara (FEMA Docket No. 7232).	Unincorporated Areas.	October 17, 1997, October 24, 1997, *Santa Barbara News-Press*.	The Honorable Naomi Schwartz, Chairperson, Santa Barbara County Board of Supervisors, 105 East Anapamu Street, Santa Barbara, California 93101.	September 15, 1997.	060331
San Diego (FEMA Docket No. 7236).	City of Vista	November 14, 1997, November 21, 1997, *Vista Press*.	The Honorable Gloria McClellan, Mayor, City of Vista, P.O. Box 1988, Vista, California 92085.	February 18, 1998	060297
San Diego (FEMA Docket No. 7236).	City of Vista	November 21, 1997, November 28, 1997, *Vista Press*.	The Honorable Gloria McClellan, Mayor, City of Vista, P.O. Box 1988, Vista, California 92085.	February 26, 1998	060297
Colorado:					
Arapahoe (FEMA Docket No. 7236).	Unincorporated Areas.	November 20, 1997, November 27, 1997, *The Villager*.	The Honorable Polly Page, Chairperson, Arapahoe County Board of County Commissioners, 5334 South Prince Street, Littleton, Colorado 80166.	November 3, 1997	080081
Adams, Boulder, and Jefferson (FEMA Docket No. 7232).	City of Broomfield	September 25, 1997, October 2, 1997, *Broomfield Enterprise Sentinel*.	The Honorable Bill Berens, Mayor, City of Broomfield, One Descombes Drive, Broomfield, Colorado 80038–1415.	September 5, 1997.	085073
El Paso (FEMA Docket No. 7232).	City of Colorado Springs.	September 24, 1997, October 1, 1997, *Gazette Telegraph*.	The Honorable Mary Lou Makepeace, Mayor, City of Colorado Springs, P.O. Box 1575, Colorado Springs, Colorado 80901–1575.	August 20, 1997 ..	080060
El Paso (FEMA Docket No. 7232).	City of Colorado Springs.	November 7, 1997, November 14, 1997, *Gazette Telegraph*.	The Honorable Mary Lou Makepeace, Mayor, City of Colorado Springs, P.O. Box 1575, Colorado Springs, Colorado 80901–1575.	October 9, 1997 ..	080060
Douglas (FEMA Docket No. 7232).	Unincorporated Areas.	October 1, 1997, October 8, 1997, *Douglas County News Press*.	The Honorable Michael Cooke, Chairman, Douglas County Board of Commissioners, 101 Third Street, Castle Rock, Colorado 80104.	August 27, 1997 ..	080049
Larimer (FEMA Docket No. 7232).	Unincorporated Areas.	October 3, 1997, October 10, 1997, *Loveland Daily Reporter-Herald*.	The Honorable Jim Disney, Chairman, Larimer County Board of Commissioners, P.O. Box 1190, Fort Collins, Colorado 80522.	September 8, 1997.	080101
Boulder (FEMA Docket No. 7232).	City of Longmont	October 24, 1997, October 31, 1997, *Daily Times-Cal*.	The Honorable Leona Stoecker, Mayor, City of Longmont, 350 Kimbark Street, Longmont, Colorado 80501.	September 24, 1997.	080027
Larimer (FEMA Docket No. 7232).	City of Loveland ..	October 3, 1997, October 10, 1997, *Loveland Daily Reporter-Herald*.	The Honorable Treva Edwards, Mayor, City of Loveland, 500 East Third Street, Loveland, Colorado 80537.	September 8, 1997.	080103

State and county	Location	Dates and name of newspaper where notice was published	Chief executive officer of community	Effective date of modification	Community No.
Adams, Boulder, and Jefferson (FEMA Docket No. 7232).	City of Westminster.	September 25, 1997, October 2, 1997, *Broomfield Enterprise Sentinel*.	The Honorable Nancy M. Heil, Mayor, City of Westminster, 4800 West 92nd Avenue, Westminster, Colorado 80030.	September 5, 1997.	080008
Hawaii:					
Maui County (FEMA Docket No. 7236).	Maui	November 20, 1997, November 27, 1997, *Maui News*.	The Honorable Linda Crockett-Lingle, Mayor, Maui County, 250 South High Street, Wailuku, Maui, Hawaii 96793.	October 22, 1997	150003
Idaho:					
Canyon (FEMA Docket No. 7232).	Unincorporated Areas.	September 11, 1997, ... September 18, 1997, ... *Idaho Press-Tribune*	The Honorable Abel Vasquez, Chairperson, Canyon County Commissioners, Canyon County Courthouse, 1115 Albany Street, Caldwell, Idaho 83605.	August 26, 1997 ..	160208
Canyon (FEMA Docket No. 7232).	City of Nampa	September 11, 1997, ... September 18, 1997, ... *Idaho Press-Tribune*	The Honorable Winston K. Goering, Mayor, City of Nampa, 411 Third Street South, Nampa, Idaho 83651.	August 26, 1997 ..	160038
Canyon (FEMA Docket No. 7236).	City of Nampa	November 18, 1997, ... November 25, 1997, ... *Idaho Press-Tribune*	The Honorable Winston K. Goering, Mayor City of Nampa, 411 Third Street South, Nampa, Idaho 83651.	October 24, 1997	160038
Kansas: Johnson (FEMA Docket No. 7232).	City of Overland Park.	October 21, 1997, ... October 28, 1997, ... *The Legal Record*	The Honorable Ed Eilert, Mayor, City of Overland Park, City Hall, 8500 Santa Fe Drive, Overland Park, Kansas 66212.	September 25, 1997.	200174
Louisiana:					
Caddo Parish (FEMA Docket No. 7236).	Unincorporated Areas.	November 14, 1997, ... November 21, 1997, ... *The Times*	The Honorable Judy Durham, Administrator and Chief Executive Officer, Caddo Parish, 525 Marshall Street, Shreveport, Louisiana 71101.	October 20, 1997	220361
Rapides Parish (FEMA Docket No. 7236).	City of Pineville ...	December 11, 1997, ... December 18, 1997, ... *Alexandria Daily Town Talk*.	The Honorable Fred H. Baden, Mayor, City of Pineville, P.O. Box 3820, Pineville, Louisiana 71361.	November 17, 1997.	220151
Rapides Parish (FEMA Docket No. 7236).	Unincorporated Areas.	December 11, 1997, ... December 18, 1997, ... *Alexandria Daily Town Talk*.	The Honorable Richard Billings, President, Rapides Parish Police Jury, 701 Murray Street, Alexandria, Louisiana 71301.	November 17, 1997.	220145
Caddo Parish (FEMA Docket No. 7236).	City of Shreveport	November 14, 1997, ... November 21, 1997, ... *The Times*	The Honorable Robert Williams, Mayor, City of Shreveport, P.O. Box 31109, Shreveport, Louisiana 71130.	October 20, 1997	220036
Missouri:					
St. Louis (FEMA Docket No. 7232).	City of Chesterfield.	October 1, 1997, ... October 8, 1997, ... *Press Journal and Chesterfield Journal*.	The Honorable Nancy Greenwood, Mayor, City of Chesterfield, 922 Roosevelt Parkway, Chesterfield, Missouri 63107–2080.	January 6, 1998 ..	290896
Jackson (FEMA Docket No. 7236).	City of Kansas City.	November 7, 1997, ... November 14, 1997, ... *The Kansas City Star*	The Honorable Emanuel Cleaver, Mayor, City of Kansas City, City Hall, 414 East 12th Street, 29th Floor, Kansas City, Missouri 64106–2785.	August 20, 1997 ..	290173
St. Louis (FEMA Docket No. 7232).	City of Wildwood	October 1, 1997, ... October 8, 1997, ... *Press Journal* and *Chesterfield Journal*.	The Honorable R. W. Marcantano, Mayor, City of Wildwood, 16962 Manchester Road, Wildwood, Missouri 63040.	January 6, 1998 ..	290922
Nevada:					
Clark (FEMA Docket No. 7236).	Unincorporated Areas.	November 21, 1997, November 28, 1997, *Las Vegas Review Journal*.	The Honorable Yvonne Atkinson Gates, Chairperson, Clark County Board of Commissioners, 225 East Bridger Avenue, Las Vegas, Nevada 89155.	October 27, 1997	320003
Washoe (FEMA Docket No. 7236).	City of Sparks	December 3, 1997, December 10, 1997, *The Daily Sparks Tribune*.	The Honorable Bruce H. Breslow, Mayor, City of Sparks, P.O. Box 857, Sparks, Nevada 89432–0857.	November 5, 1997	320021
New Mexico:					
Bernalillo (FEMA Docket No. 7232).	City of Albuquerque.	September 26, 1997, October 3, 1997, *The Albuquerque Journal*.	The Honorable Martin J. Chávez, Mayor, City of Albuquerque, P.O. Box 1293, Albuquerque, New Mexico 87103–1293.	September 5, 1997.	350002

State and county	Location	Dates and name of newspaper where notice was published	Chief executive officer of community	Effective date of modification	Community No.
Bernalillo (FEMA Docket No. 7232).	City of Albuquerque.	October 2, 1997, October 9, 1997, *The Albuquerque Journal*.	The Honorable Martin J. Chávez, Mayor, City of Alburquerque, P.O. Box 1293, Albuquerque, New Mexico 87103–1293.	September 10, 1997.	350002
Bernalillo (FEMA Docket No. 7232).	City of Albuquerque.	October 7, 1997, October 14, 1997, *The Albuquerque Journal*.	The Honorable Martin J. Chávez, Mayor, City of Albuquerque, P.O. Box 1293, Albuquerque, New Mexico 87103–1293.	September 15, 1997.	350002
Bernalillo (FEMA Docket No. 7232).	City of Albuquerque.	October 24, 1997, October 31, 1997, *The Albuquerque Journal*.	The Honorable Martin J. Chávez, Mayor, City of Albuquerque, P.O. Box 1293, Albuquerque, New Mexico 87103–1293.	September 25, 1997.	350002
Bernalillo (FEMA Docket No. 7232).	City of Albuquerque.	November 4, 1997, November 11, 1997, *The Albuquerque Journal*.	The Honorable Martin J. Chávez, Mayor, City of Albuquerque, P.O. Box 1293, Albuquerque, New Mexico 87103–1293.	October 3, 1997 ..	350002
Bernalillo (FEMA Docket No. 7236).	City of Albuquerque.	November 19, 1997, November 26, 1997, *The Albuquerque Journal*.	The Honorable Martin J. Chávez, Mayor, City of Albuquerque, P.O. Box 1293, Albuquerque, New Mexico 87103–1293.	October 24, 1997	350002
Bernalillo (FEMA Docket No. 7232).	Unincorporated Areas.	September 26, 1997, October 3, 1997, *The Albuquerque Journal*.	The Honorable Tom Rutherford, Chairman, Bernalillo County Board of Commissioners, 2400 Broadway Southeast, Albuquerque, New Mexico 87102.	September 5, 1997.	350001
Bernalillo (FEMA Docket No. 7236).	Unincorporated Areas.	November 21, 1997, November 28, 1997, *The Albuquerque Journal*.	The Honorable Tom Rutherford, Chairman, Bernalillo County Board of Commissioners, 2400 Broadway Southeast, Albuquerque, New Mexico 87102.	October 31, 1997	350001
Oklahoma:					
Comanche (FEMA Docket No. 7236).	City of Lawton	December 5, 1997, December 12, 1997, *The Lawton Constitution*.	The Honorable John Marley, Mayor, City of Lawton, City Hall, 103 Southwest Fourth Street, Lawton, Oklahoma 73501.	October 31, 1997	400049
Comanche (FEMA Docket No. 7236).	City of Lawton	December 5, 1997, December 12, 1997, *The Lawton Constitution*.	The Honorable John Marley, Mayor, City of Lawton, City Hall, 103 Southwest Fourth Street, Lawton, Oklahoma 73501.	November 14, 1997.	400049
Tulsa (FEMA Docket No. 7236).	City of Tulsa	January 9, 1998, January 16, 1998, *Tulsa World*.	The Honorable Susan Savage, Mayor, City of Tulsa, 200 Civic Center, 11th Floor, Tulsa, Oklahoma 74103.	December 9, 1997	405381
Oregon:					
Coos (FEMA Docket No. 7232).	City of Bandon	October 1, 1997, October 8, 1997, *Bandon Western World*.	The Honorable Judy Densmore, Mayor, City of Bandon, P.O. Box 67, Bandon, Oregon 97411.	September 5, 1997.	410043
Lane (FEMA Docket No. 7232).	Unincorporated Areas.	October 1, 1997, October 8, 1997, *The Register-Guard*.	The Honorable Cindy Weeldreyer, Chairman, Lane County Board of Commissioners, 125 East Eighth Avenue, Eugene, Oregon 97401.	August 29, 1997 ..	415591
Texas:					
Johnson (FEMA Docket No. 7232).	City of Burleson ...	November 5, 1997, November 12, 1997, *Burleson Star*.	The Honorable Rick Roper, Mayor, City of Burleson, City Hall, 141 West Renfro, Burleson, Texas 76028.	October 16, 1997	485459
Dallas (FEMA Docket No. 7236).	City of Carrollton	November 21, 1997, November 28, 1997, *Metrocrest News*.	The Honorable Milburn Gravely, Mayor, City of Carrollton, P.O. Box 110535, Carrollton, Texas 75011–0535.	October 29, 1997	480167
Williamson (FEMA Docket No. 7232).	City of Cedar Park	September 10, 1997, September 17, 1997, *Hill Country News*.	The Honorable Dorothy Duckett, Mayor, City of Cedar Park, City Hall, 600 North Bell Boulevard, Cedar Park, Texas 78613.	August 18, 1997 ..	481282
Dallas (FEMA Docket No. 7232).	City of DeSoto	October 2, 1997, October 9, 1997, *Best Southwest Focus*.	The Honorable Richard Rozier, Mayor, City of DeSoto, 211 East Pleasant Run Road, DeSoto, Texas 75115.	September 11, 1997.	480172
Collin (FEMA Docket No. 7232).	City of Frisco	September 19, 1997, September 26, 1997, *Frisco Enterprise*.	The Honorable Kathy Seei, Mayor, City of Frisco, City Hall, P.O. Box 1100, Frisco, Texas 75034.	September 3, 1997.	480134

State and county	Location	Dates and name of newspaper where notice was published	Chief executive officer of community	Effective date of modification	Community No.
Collin (FEMA Docket No. 7232).	City of Frisco	October 24, 1997, October 31, 1997, *Frisco Enterprise*.	The Honorable Kathy Seei, Mayor, City of Frisco, City Hall, P.O. Box 1100, Frisco, Texas 75034.	September 25, 1997.	480134
Dallas (FEMA Docket No. 7236).	City of Garland	December 11, 1997, December 18, 1997, *The Garland News*.	The Honorable James Ratliff, Mayor, City of Garland, 200 North Fifth Street, Garland, Texas 75040.	November 14, 1997.	485471
Harris (FEMA Docket No. 7232).	Unincorporated Areas.	October 24, 1997, October 31, 1997, *Houston Chronicle*.	The Honorable Robert Eckels, Harris County Judge, 1001 Preston Street, Suite 911, Houston, Texas 77002.	October 9, 1997 ..	480287
Harris (FEMA Docket No. 7232).	Unincorporated Areas.	October 23, 1997, October 30, 1997, *Houston Chronicle*.	The Honorable Robert Eckels, Harris County Judge, 1001 Preston Street, Suite 911, Houston, Texas 77002.	September 19, 1997.	480287
Tarrant (FEMA Docket No. 7232).	City of Hurst	October 1, 1997, October 8, 1997, *Dallas Morning News*.	The Honorable Bill Souder, Mayor, City of Hurst, 1505 Precinct Line Road, Hurst, Texas 76054.	September 8, 1997.	480601
Johnson (FEMA Docket No. 7232).	Unincorporated Areas.	November 5, 1997, November 12, 1997, *Burleson Star*.	The Honorable Roger Harmon, Johnson County Judge, Johnson County Courthouse, #2 Main Street, Cleburne, Texas 76031.	October 16, 1997	480879
Williamson (FEMA Docket No. 7232).	City of Leander	October 1, 1997, October 8, 1997, *Austin American-Statesman*.	The Honorable Charles Eaton, Mayor, City of Leander, P.O. Box 319, Leander, Texas 78646–0319.	September 3, 1997.	481536
Montgomery (FEMA Docket No. 7232).	Unincorporated Areas.	October 22, 1997, October 29, 1997, *Woodlands Sun*.	The Honorable Alan B. Sadler, Montgomery County Judge, 301 North Thompson Street, Suite 210, Conroe, Texas 77301.	September 26, 1997.	480483
Montgomery (FEMA Docket No. 7232).	City of Oak Ridge North.	October 22, 1997, October 29, 1997, *Woodlands Sun*.	The Honorable Gary North, Mayor, City of Oak Ridge North, 27326 Robinson Road, Suite 115, Conroe, Texas 77385.	September 26, 1997.	481560
Collin and Dallas (FEMA Docket No. 7232).	City of Plano	September 17, 1997, September 24, 1997, *Plano Star Courier*.	The Honorable John Longstreet, Mayor, City of Plano, P.O. Box 860358, Plano, Texas 75086–0358.	September 3, 1997.	480140
Collin and Denton (FEMA Docket No. 7236).	City of Plano	December 24, 1997, December 31, 1997, *Plano Star Courier*.	The Honorable John Longstreet, Mayor, City of Plano, P.O. Box 860358, Plano, Texas 75086–0358.	November 14, 1997.	480140
Collin (FEMA Docket No. 7232).	City of Plano	October 22, 1997, October 29, 1997, *Plano Star Courier*.	The Honorable John Longstreet, Mayor, City of Plano, P.O. Box 860358, Plano, Texas 75086–0358.	September 19, 1997.	480140
Collin and Dallas (FEMA Docket No. 7232).	City of Richardson	September 17, 1997, September 24, 1997, *Plano Star Courier*.	The Honorable Gary Slagel, Mayor, City of Richardson, P.O. Box 830309, Richardson, Texas 75083–0309.	September 3, 1997.	480184
Utah: Salt Lake (FEMA Docket No. 7236).	City of Draper	December 2, 1997, December 9, 1997, *Salt Lake Tribune*.	The Honorable Richard D. Elsop, Mayor, City of Draper, 12441 South 900 East, Draper, Utah 84020.	November 6, 1997	490244

(Catalog of Federal Domestic Assistance No. 83.100, ''Flood Insurance.'')

Dated: May 11, 1998.

Michael J. Armstrong,

Associate Director for Mitigation.

[FR Doc. 98–13730 Filed 5–21–98; 8:45 am]

BILLING CODE 6718–04–P

FEDERAL EMERGENCY MANAGEMENT AGENCY

44 CFR Part 67

Final Flood Elevation Determinations

AGENCY: Federal Emergency Management Agency (FEMA).

ACTION: Final rule.

SUMMARY: Base (1% annual chance) flood elevations and modified base flood elevations are made final for the communities listed below. The base flood elevations and modified base flood elevations are the basis for the floodplain management measures that each community is required either to adopt or to show evidence of being already in effect in order to qualify or remain qualified for participation in the National Flood Insurance Program (NFIP).

EFFECTIVE DATE: The date of issuance of the Flood Insurance Rate Map (FIRM) showing base flood elevations and modified base flood elevations for each community. This date may be obtained by contacting the office where the FIRM is available for inspection as indicated in the table below.

ADDRESSES: The final base flood elevations for each community are available for inspection at the office of the Chief Executive Officer of each community. The respective addresses are listed in the table below.

FOR FURTHER INFORMATION CONTACT: Matthew B. Miller, P.E., Chief, Hazards Study Branch, Mitigation Directorate, 500 C Street SW., Washington, DC 20472, (202) 646–3461.

SUPPLEMENTARY INFORMATION: The Federal Emergency Management Agency makes final determinations listed below of base flood elevations and modified base flood elevations for each community listed. The proposed base flood elevations and proposed modified base flood elevations were published in newspapers of local circulation and an opportunity for the community or individuals to appeal the proposed determinations to or through the community was provided for a period of ninety (90) days. The proposed base flood elevations and proposed modified base flood elevations were also published in the **Federal Register**.

This final rule is issued in accordance with Section 110 of the Flood Disaster Protection Act of 1973, 42 U.S.C. 4104, and 44 CFR Part 67.

FEMA has developed criteria for floodplain management in floodprone areas in accordance with 44 CFR Part 60.

Interested lessees and owners of real property are encouraged to review the proof Flood Insurance Study and FIRM available at the address cited below for each community.

The base flood elevations and modified base flood elevations are made final in the communities listed below. Elevations at selected locations in each community are shown.

National Environmental Policy Act

This rule is categorically excluded from the requirements of 44 CFR Part 10, Environmental Consideration. No environmental impact assessment has been prepared.

Regulatory Flexibility Act

The Associate Director for Mitigation certifies that this rule is exempt from the requirements of the Regulatory Flexibility Act because final or modified base flood elevations are required by the Flood Disaster Protection Act of 1973, 42 U.S.C. 4104, and are required to establish and maintain community eligibility in the NFIP. No regulatory flexibility analysis has been prepared.

Regulatory Classification

This final rule is not a significant regulatory action under the criteria of Section 3(f) of Executive Order 12866 of September 30, 1993, Regulatory Planning and Review, 58 FR 51735.

Executive Order 12612, Federalism

This rule involves no policies that have federalism implications under Executive Order 12612, Federalism, dated October 26, 1987.

Executive Order 12778, Civil Justice Reform

This rule meets the applicable standards of Section 2(b)(2) of Executive Order 12778.

List of Subjects in 44 CFR Part 67

Administrative practice and procedure, Flood insurance, Reporting and recordkeeping requirements.

Accordingly, 44 CFR part 67 is amended to read as follows:

PART 67—[AMENDED]

1. The authority citation for part 67 continues to read as follows:

Authority: 42 U.S.C. 4001 *et seq.*; Reorganization Plan No. 3 of 1978, 3 CFR, 1978 Comp., p. 329; E.O. 12127, 44 FR 19367, 3 CFR, 1979 Comp., p. 376.

§ 67.11 [Amended]

2. The tables published under the authority of § 67.11 are amended as follows:

Source of flooding and location	#Depth in feet above ground. *Elevation in feet (NGVD)
ALASKA	
Emmonak (City), Unorganized Borough (FEMA Docket No. 7238)	
Yukon River:	
Over the entire corporate limits of the City ..... —To indicate mean sea level (approximate).	△ 20
Maps are available for inspection at the City Office, Emmonak, Alaska.	
ARKANSAS	
Lakeview (Town), Phillips County (FEMA Docket No. 7238)	
White River:	
At the intersection of Center and Martin Luther King	*173
Approximately 1,500 feet east of the intersection of Martin Luther King and Maple	*173
Maps are available for inspection at the Town of Lakeview Town Hall, 14264 Highway 44, Helena, Arkansas.	
West Helena (City), Phillips County (FEMA Docket No. 7238)	
Crooked Creek:	
Just downstream of Airport Road	*228
Crooked Creek Lateral "A":	
Approximately 400 feet upstream of Mimosa Street ...	*258
Approximately 1,300 feet upstream of Mimosa Street ...	*266
Caney Creek:	
Approximately 300 feet downstream of Little Rock Road	*211
Approximately 700 feet downstream of Highway 49	*225
Approximately 200 feet upstream of Highway 49	*232
Caney Creek Lateral "A":	
Approximately 100 feet upstream of confluence with Caney Creek	*232
Caney Creek Lateral "D":	
Approximately 500 feet downstream of Little Rock Road	*207
Approximately 100 feet upstream of Little Rock Road	*211
Maps are available for inspection at the City of West Helena City Hall, 98 East Plaza, West Helena, Arkansas.	
Phillips County (Unincorporated Areas) (FEMA Docket No. 7238)	
Crooked Creek:	
At confluence with Lick Creek	*197
Just downstream of Quarles Lane	*252
Crooked Creek Lateral "A":	
At confluence with Crooked Creek	*242
Approximately 3,000 feet downstream of Hill Road ...	#2
Approximately 550 feet downstream of Hill Road ...	*270
Crooked Creek Lateral "B":	
At confluence with Crooked Creek	*231
Approximately 800 feet upstream of Kelsa Street	*238
Crooked Creek Lateral "C":	
At confluence with Crooked Creek	*234
Approximately 1,750 feet downstream from Sebastian Street	*238
Caney Creek:	
At confluence with Beaver Bayou Ditch	*183
Approximately 4,250 feet upstream of Springdale Road	*279
Caney Creek Lateral "A":	
Approximately 200 feet upstream of confluence with Caney Creek	*232
Approximately 2,000 feet upstream of County Highway 242	*246
Caney Creek Lateral "C":	
At confluence with Caney Creek	*205
Just downstream of Little Rock Road	*210

Source of flooding and location	#Depth in feet above ground. *Elevation in feet (NGVD)
Caney Creek Lateral "D":	
At confluence with Caney Creek	*198
Just downstream of Little Rock Road	*210
Beaver Bayou Ditch:	
At Missouri Pacific Railroad	*173
Just south of Missouri Pacific Railroad	*182
Lick Creek:	
At confluence with Big Creek	*173
Approximately 3,700 feet upstream of Missouri Pacific Railroad	*199
Freedonia Branch:	
Just downstream of U.S. Route 49	*212
Approximately 2,200 feet upstream of Farm Road	*230
Main Outlet Ditch:	
Just upstream of Long Lake	*179
Approximately 300 feet upstream of Missouri Pacific Railroad	*182
Mississippi River:	
At U.S. Highway 49	*197
Approximately 2.75 miles upstream of U.S. Highway 49	*198
Maps are available for inspection at 620 Cherry Street, Helena, Arkansas.	
CALIFORNIA	
Gilroy (City), Santa Clara County (FEMA Docket No. 7226)	
Uvas Creek East Overbank Above Highway 101:	
Just above Highway 101	*186
Approximately 2,000 feet upstream of Highway 101	*192
West Branch Llagas Creek:	
Approximately 500 feet upstream of Golden Gate Avenue	*232
West Branch Llagas Creek, East Split:	
Approximately 300 feet north of Day Road	*222
Approximately 500 feet north of Golden Gate Avenue	*232
Uvas Creek East Overbank Above SPRR:	
Ponding north of Bolsa Road between the Southern Pacific Railroad and Uvas Creek	*175
Just south of the intersection of Monterey Highway and the Southern Pacific Railroad	*187
Maps are available for inspection at the City of Gilroy City Hall, 7351 Rosanna Street, Gilroy, California.	
Sacramento (City), Sacramento County (FEMA Docket No. 7063)	
American River:	
Just upstream of confluence with the Sacramento River	*31
Just upstream of State Highway 160	*36
Approximately 8,000 feet upstream of Business Interstate 80	*42
Approximately 2,000 feet upstream of H Street	*46
Approximately 700 feet downstream of Watt Avenue	*52
American River (Detailed Flooding Adjacent to the River):	
At the intersection of N and 28th Streets	*26
At the intersection of W and 33rd Streets	*26
At the intersection of 35th Street and Folsom Boulevard	*28
At the intersection of 41st and M Streets	*30
At the intersection of D and 46th Streets	*32
Just north of the intersection of Business Route 80 and the Southern Pacific Railroad	*43
At the intersection of Callister and Carlson Drives	*44
Approximately 3,000 feet south of the intersection of Arden and Challenge Ways	*44
At the intersection of Jordan Way and Jed Smith Drive	*45
At the intersection of Julliard and Occidental Drives	*48
At Mossglen Circle	*49
Arcade Creek:	
Just upstream of confluence with Natomas East Main Drainage Canal	*36
Approximately 1,300 feet upstream of Rio Linda Boulevard	*33
Just upstream of Marysville Boulevard	*40
Deep Ponding:	
At the intersection of Deer Gren Drive and Red Deer Way	*16
Approximately 1,000 feet west of the intersection of Archean Way and Deer Creek Drive	*16
At the intersection of Decathalon Circle and Archean Way	*16
Approximately 500 feet west of the intersection of Deer Gren Drive and Red Deer Way	*16
Approximately 800 feet west of Black Trail and Deer Gren Drives	*16
At the intersection of Deer Lake Drive and Evalita Way	*16
Approximately 300 feet east of the intersection of Deer Water and Sea Meadow Ways	*16
Approximately 800 feet southeast of the intersection of Deer Lake Drive and Sea Forest Way	*16
At the intersection of Amina and Chinquapin Ways	*16
Approximately 2,000 feet southwest of the intersection of Ernhardt Avenue and Franklin Boulevard	*16
Approximately 3,000 feet southwest of the intersection of Ernhardt Avenue and Franklin Boulevard	*16
Approximately 400 feet southwest of the intersection of Ernhardt Avenue and Franklin Boulevard	*16
Approximately 400 feet north of the intersection of Eddington Court and Euler Way	*16
At the intersection of Deer Creek Drive and Decathalon Circle	*16
Approximately 200 feet south of the intersection of Mack Road and Archean Way	*16
South of the intersection of Deer Lake Drive and De la Vina Way	*16
Approximately 300 feet east of the intersection of Deer Water Way and Deer Lake Drive	*16
Approximately 50 feet southwest of the intersection of Valley Hi Drive and Chinquapin Way	*16
Approximately 800 feet south of the intersection of Deer Lake Drive and Sea Forest Way	*16
At the intersection of Valley Hi Drive and Halkeep Way	*16
Approximately 1,000 feet south of the intersection of La Coruna and Valley Hi Drives	*16
Approximately 8,000 feet south of the intersection of 23rd Street and Craig Avenue	*16
At the intersection of Meadowview Road and 24th Street	*18
At the intersection of Meadowgate Drive and Winner Way	None
At the intersection of Golfview Drive and Mangrum Avenue	*18
At the intersection of Greenhaven Drive and Pocket Road	*19
At the intersection of Havenside Drive and Florin Road	*19
At the intersection of Riverside Boulevard and Park Riviera Drive	*19
At the intersection of 26th and Euclid Avenues	*19
At the intersection of Freeport Boulevard and Wentworth Avenue	*24
At the intersection of Ninth Avenue and 33rd Street	*24
At the intersection of P and 18th Streets	*24
At the intersection of Truxel Road and West El Camino Avenue	None
At the intersection of Del Paso and El Centro Roads	None
At the intersection of Orchard Lane and West El Camino Avenue	None

Source of flooding and location	#Depth in feet above ground. *Elevation in feet (NGVD)
At the intersection of Bercut Drive and Richards Boulevard	*35
At the intersection of North 12th and Sitka Streets	*35
At the intersection of Bell Court Avenue and Englewood Street	None
At the intersection of Taylor Street and Interstate Highway 880	None
At the intersection of Norwood and Las Palmas Avenues	*36
Approximately 2,000 feet west of the intersection of 20th and A Streets	*38
At the intersection of Response Road and Heritage Lane	*41
Dry Creek:	
Just upstream of confluence with Natomas East Main Drainage Canal	*38
Approximately 8,700 feet upstream of confluence with Natomas East Main Drainage Canal	*40
Lower Magpie Creek:	
Approximately 500 feet upstream of Natomas East Main Drainage Canal	*19
Just downstream of Rio Linda Boulevard	*32
Morrison Creek:	
Approximately 300 feet upstream of Elk Grove Florin Road	*47
Natomas East Drainage Canal:	
Just upstream of confluence with Natomas Main Drainage Canal	None
Just downstream of Elkhorn Boulevard	None
Natomas East Main Drainage Canal:	
Approximately 1,000 feet upstream of Northgate Boulevard	*35
Just downstream of Interstate 880	*37
Approximately 2,500 feet upstream of Main Avenue	*38
Just downstream of the City of Sacramento corporate limits	*31
Natomas Main Drainage Canal:	
Just upstream of Garden Highway	None
Just upstream of Interstate 80	None
Natomas West Drainage Canal:	
Just upstream of confluence with Natomas Main Drainage Canal	None
Just downstream of Del Paso Road	None
Robla Creek:	
Just upstream of confluence with Natomas East Main Drainage Canal	*38
Just upstream of Rio Linda Boulevard	*39
Sacramento River:	
Approximately 4,000 feet downstream of Sleepy River Way	*24
Approximately 200 feet upstream of Evros River Court	*27
Approximately 1,200 feet upstream of 43rd Avenue	*29
Approximately 1,000 feet upstream of Darnel Way	*30
Approximately 3,000 feet upstream of I Street	*31
Shallow Flooding:	
Approximately 500 feet southeast of the intersection of Arden and Challenge Ways	#2
At the intersection of Woodbine and 47th Avenues	#2
Approximately 500 feet north of the intersection of 47th Avenue and Romack Circle	#3
At the intersection of Kitchner Avenue and Zelda Way	#3
At the intersection of Edna and 24th Streets	#3
At the intersection of Alvarado and Riviera Drives	#2
At the intersection of Arcade Boulevard and Clay Street	#1
Approximately 1,500 feet north of the intersection of Tunis Road and Barros Drive	None
Approximately 800 feet south of the intersection of Arden Way and Evergreen Street	#1
Unionhouse Creek:	
Just upstream of the confluence with Morrison Creek	*16
Approximately 400 feet downstream of Franklin Boulevard	*16
Maps are available for inspection at the City of Sacramento Department of Public Works, Engineering Division, 927 Tenth Street, Room 100, Sacramento, California.	
———	
Sacramento (City), Sacramento County (FEMA Docket No. 7218)	
Morrison Creek:	
Approximately 6,440 feet downstream of confluence with Unionhouse Creek	*16
Approximately 370 feet downstream of Meadowview Road	*16
Unionhouse Creek:	
Approximately 260 feet downstream of Western Pacific Railroad	*16
Approximately 530 feet downstream of Franklin Boulevard	*16
Elder Creek:	
At confluence with Morrison Creek	*16
Approximately 1,700 feet upstream of confluence with Morrison Creek	*16
Maps are available for inspection at the City of Sacramento City Hall, 915 I Street, Room 207, Sacramento, California.	
———	
Sacramento County (Unincorporated Areas) (FEMA Docket No. 7063)	
American River:	
Just downstream of Northrop Avenue	*42
Approximately 1,000 feet downstream of Watt Avenue	*52
Approximately 14,000 feet upstream of Watt Avenue	*58
Approximately 23,000 feet upstream of Watt Avenue	*60
Approximately 7,000 feet downstream of confluence with Carmichael Creek	*66
Approximately 1,900 feet upstream of confluence with Carmichael Creek	*76
Approximately 5,500 feet upstream of confluence with Carmichael Creek	*80
Approximately 9,700 feet upstream of confluence with Carmichael Creek	*86
Approximately 500 feet downstream of Sunrise Boulevard	*92
Approximately 6,600 feet upstream of Sunrise Boulevard	*100
Approximately 300 feet downstream of Hazel Avenue	*106
Approximately 300 feet upstream of Hazel Avenue	*114
Just upstream of Nimbus Dam	*126
American River (Detailed Flooding Adjacent to the River):	
At the intersection of Ethan Drive and El Camino Avenue	*41
At the intersection of Keith Way and Violet Street	*41
At the intersection of Fair Oaks Boulevard and Munroe Street	*44
At the intersection of the Southern Pacific Railroad and Reith Court	*49
At the intersection of Watt Avenue and La Riviera Drive	*50
At the intersection of Manlove Road and Folsom Boulevard	*50
At the intersection of Estates and American River Drives	*55
At the intersection of American River Drive and Whitehall Way	*55
Approximately 100 feet east of the intersection of Huntsman Drive and Mayhew Road	*56
At the intersection of Mayhew Road and Folsom Boulevard	*56
Approximately 7,000 feet downstream of Hazel Avenue, South Overbank	*102
American River (Shallow Flooding):	

Source of flooding and location	#Depth in feet above ground. *Elevation in feet (NGVD)
Approximately 8,000 feet upstream of Watt Avenue, South Overbank	#1
Approximately 100 feet north of the intersection of La Riviera Drive and Folsom Boulevard	#1
Just southeast of the intersection of La Riviera Drive and Folsom Boulevard	#2
Approximately 500 feet west of the intersection of Folsom Boulevard and Mayhew Road	None
Approximately 1,100 feet north and 200 feet west of the intersection of Folsom Boulevard and Mayhew Road	None
Approximately 1,500 feet downstream of Nimbus Dam, South Overbank	None
Carmichael Creek:	
Just upstream of confluence with the American River	*74
Approximately 125 feet downstream of Palm Drive	*76
Chicken Ranch Slough:	
Approximately 700 feet downstream of Hurley Way	*33
Just downstream of Hernando Road	*43
Deep Ponding:	
At the intersection of Beach Lake Road and Interstate Route 5	*16
At the intersection of the Union Pacific Railroad and Laguna Creek	*16
At the intersection of two unnamed roads approximately 3,000 feet west of the intersection of the Union Pacific Railroad and Laguna Creek	*16
Approximately 2,000 feet southeast of the intersection of Unionhouse Creek and the Union Pacific Railroad	*16
Approximately 200 feet southeast of the intersection of Unionhouse Creek and the Union Pacific Railroad	*16
At the intersection of Stonecrest Avenue and Interstate Route 5	*18
Approximately 2,000 feet southwest of the intersection of Sacramento Boulevard and Fruitridge Road	None
Approximately 3,000 feet west of the intersection of Sacramento Boulevard and Lemon Hill Avenue	None
At the intersection of Elkhorn Boulevard and Powerline Road	None
At the intersection of Delta and Powerline Roads	None
At the intersection of Elverta and Powerline Roads	None
At the intersection of El Centro and Elverta Roads	None
Approximately 2,500 feet east of the intersection of Elverta Road and Natomas East Drainage Canal	None
At the intersection of Interstate Route 5 and Schoolhouse Road	None
At the intersection of Del Paso and Powerline Roads	None
At the intersection of Meister Way and Powerline Road	None
At the intersection of El Centro Road and Elkhorn Boulevard	None
At the intersection of Garden Highway and San Juan Road	None
Approximately 2,000 feet west of the intersection of Elverta Road and the Union Pacific Railroad	None
Just west of the intersection of Sorento and Del Paso Roads	None
Dry Creek:	
Just east of West Fourth Street, along Ascot Avenue	None
At the intersection of Ascot Avenue and West Second Street	None
Approximately 300 feet east of the intersection of Ascot Avenue and West Second Street	None
Dry Creek, North Branch:	
Approximately 200 feet upstream of confluence with Dry Creek, West Overbank	*41
Approximately 600 feet upstream of confluence with Dry Creek, West Overbank	*41
Just upstream of Marysville Boulevard, West Overbank	*41
Natomas East Drainage Canal:	
Just upstream of Elkhorn Boulevard	None
Just downstream of the Sacramento-Sutter County boundary	None
Natomas East Main Drainage Canal:	
Approximately 2,700 feet downstream of Sorento Road	*31
Just downstream of confluence with Natomas East Main Drainage Canal Tributary I	*31
Approximately 5,800 feet upstream of confluence with Natomas East Main Drainage Canal Tributary F	*33
Natomas East Main Drainage Canal (Shallow Flooding):	
Approximately 2,500 feet downstream of Elkhorn Boulevard, West Overbank	None
At Elkhorn Boulevard, West Overbank	None
Approximately 1,300 feet upstream of Elkhorn Boulevard, West Overbank	None
Approximately 4,500 feet upstream of Elverta Road, West Overbank	None
Natomas East Main Drainage Canal Tributary F:	
Just upstream of confluence with Natomas East Main Drainage Canal	*33
Just downstream of Rio Linda Boulevard	*36
Natomas East Main Drainage Canal Tributary G:	
Just upstream of confluence with Natomas East Main Drainage Canal	*33
Approximately 40 feet downstream of Elwyn Avenue	*37
Natomas East Main Drainage Canal Tributary I:	
Approximately 1,000 feet upstream of confluence with Natomas East Main Drainage Canal	*31
Just downstream of West Second Street	*35
Natomas Main Drainage Canal:	
Just upstream of Interstate Highway 80	None
Natomas North Drainage Canal:	
Approximately 2,200 feet downstream of the access road	None
Just downstream of the Sacramento-Sutter County boundary	None
Natomas West Drainage Canal:	
Just upstream of confluence with Natomas Main Drainage Canal	None
Just downstream of Elkhorn Boulevard	None
At Elkhorn Boulevard	None
Sacramento River:	
Approximately 200 feet upstream of Freeport Bridge	*25
Approximately 5,000 feet upstream of Freeport Bridge	*26
Approximately 4,000 feet upstream of Interstate Route 80	*31
Approximately 4,000 feet downstream of Interstate Route 80	*31
Approximately 5,000 feet upstream of San Juan Road	*32
Approximately 5,000 feet upstream of Powerline Road	*33
Approximately 5,000 feet downstream of Interstate Highway 5	*35
Approximately 4,500 feet downstream of Elkhorn Boulevard	*36
Approximately 500 feet upstream of Elkhorn Boulevard	*37
Approximately 8,200 feet upstream of Elverta Road	*38
Shallow Flooding:	
At the intersection of Lemon Hill Avenue and Franklin Boulevard	#1
Strong Ranch Slough:	
Approximately 200 feet downstream of Howe Avenue	*33
Just downstream of Wyda Way	*43

Maps are available for inspection at the Sacramento County Department of Public Works, Water Resources Division, 827 Seventh Street, Room 301, Sacramento, California.

Source of flooding and location	#Depth in feet above ground. *Elevation in feet (NGVD)
San Jose (City), Santa Clara County (FEMA Docket No. 7214)	
Calabazas Creek:	
Approximately 600 feet downstream of Prospect Drive	*290
Just downstream of Prospect Drive	*297
Alamitos Creek Above Percolation Pond:	
At Percolation Pond	*196
At Winfield Boulevard	*203
800 feet upstream of Almaden Expressway	*327
Berryessa Creek:	
Just upstream of Morrill Avenue	*110
Approximately 200 feet upstream of Piedmont Road	*218
South Babb Creek:	
Approximately 700 feet downstream of Clayton Road	*200
At private drive 300 feet downstream of Clayton Road	*208
Upper Silver Creek:	
At Yerba Buena Road	*170
Just above private drive near intersection of Silver Creek and Yerba Buena Roads	*280
Maps are available for inspection at the City of San Jose City Hall, 801 North First Street, Room 308, San Jose, California.	
Santa Clara County (Unincorporated Areas) (FEMA Docket No. 7226)	
Alamitos Creek:	
At projection of Pfeiffer Court across Graystone Lane	*260
At confluence of Arroyo Calero	*283
East Little Llagas Creek:	
At confluence with Llagas and Church Creeks	*248
Just upstream of Middle Avenue	*304
Madrone Channel:	
At confluence with East Little Llagas Creek	*305
Approximately 2,000 feet upstream of East Main Avenue	*369
San Tomas Aquino Creek:	
At intersection of Davis and Gianera Streets	*15
At intersection of Fillmore and North Fourth Streets	*17
Tennant Creek:	
At confluence with East Little Llagas Creek	*288
Just upstream of Middle Avenue	*308
Approximately 1,500 feet upstream of Tennant Avenue	*346
Uvas Creek:	
Just above the Southern Pacific Railroad	*174
Just upstream of Hecker Pass Highway (Highway 152)	*246
Just below Uvas Reservoir	*398
Watsonville Road Overflow:	
Just downstream of Watsonville Road	*320
At confluence with Llagas Creek	*303
West Branch Llagas Creek:	
Just upstream of Day Road	*221
Along Turlock Avenue between Highland Avenue and Fitzgerald Road	#1
Approximately 2,500 feet upstream of Coolidge Avenue	*291
West Little Llagas Creek:	
Just upstream of Highway 101	*305
Just downstream of Monterey Highway	*316
Calabazas Creek:	
Approximately 600 feet downstream of Prospect Road	*290
Just downstream of Prospect Road	*297
Middle Avenue Overflow (From West Little Llagas Creek):	
At confluence with Llagas Creek just north of San Martin Avenue	*283
At intersection of Middle and Murphy Avenues	*305
West Branch Llagas Creek-Upper Split:	
Approximately 1,000 feet west of Coolidge Avenue	*278
At Harding Avenue, 500 feet north of intersection with Highland Avenue	*267
Uvas Creek (South Split):	
Just north of Bloomfield Avenue between Monterey Highway and the Southern Pacific Railroad	*166
Approximately 3,000 feet north of Bloomfield Avenue between Monterey Highway and the Southern Pacific Railroad	*179
Maps are available for inspection at the Santa Clara County Department of Land Use and Development, Central Permit Office, 70 West Hedding Street, San Jose, California.	
Sutter County (Unincorporated Areas) (FEMA Docket No. 7063)	
Cross Canal:	
At confluence with the Sacramento River	*39
At confluence with Pleasant Grove Creek Canal	*40
Deep Ponding:	
At the intersection of Sankey and Power Line Roads	None
At the intersection of Sankey Road and Pacific Avenue	None
At the intersection of Riego and Power Line Roads	None
Natomas East Main Drainage Canal:	
Approximately 2,000 feet south of Sankey Road	*37
At the Sacramento County line	*33
Pleasant Grove Creek Canal:	
At confluence with Cross Canal	*40
At confluence with Pleasant Grove Creek	*41
Sacramento River:	
At confluence with Cross Canal	*39
At the Sacramento County line	*38
Maps are available for inspection at the Sutter County Department of Public Works, Planning Department, Suite D, 1160 Civic Center Boulevard, Yuba City, California.	
Tulare County (Unincorporated Areas) (FEMA Docket No. 7238)	
Kaweah River Overflow:	
Just above State Highway 198	*186
Approximately 200 feet upstream of Persian Ditch	*293
Approximately 1,150 feet upstream of Shirk Road	*299
Maps are available for inspection at the Tulare County Courthouse, 2800 West Burrell, Room 10, Visalia, California.	
Visalia (City), Tulare County (FEMA Docket No. 7238)	
Kaweah River Overflow:	
Just above State Highway 198	*186
Approximately 200 feet upstream of Persian Ditch	*293
Approximately 1,150 feet upstream of Shirk Road	*299
Maps are available for inspection at the City of Visalia Planning and Building Department, 707 West Acequia, Visalia, California.	
KANSAS	
Kansas City (City), Wyandotte County (FEMA Docket No. 7238)	
Island Creek:	
At confluence with Missouri River	*766
Just upstream of 123rd Street	*839
Just upstream of Polfer Road (westernmost bridge)	*870
Honey Creek:	
At confluence with Island Creek	*777
Just upstream of Hubbard Street	*812
Just upstream of 115th Street	*864
Maps are available for inspection at 701 North Seventh Street, Fourth Floor, Room 421, Kansas City, Kansas.	

Source of flooding and location	#Depth in feet above ground. *Elevation in feet (NGVD)
LOUISIANA	
Robeline (Village), Natchitoches Parish (FEMA Docket No. 7238)	
Winn Creek:	
Approximately 1,200 feet downstream of abandoned railroad	*141
Approximately 1,500 feet upstream of Louisiana Highway 120	*148
Maps are available for inspection at 122 Depot Street, Robeline, Louisiana.	
Sulphur (City), Calcasieu Parish (FEMA Docket No. 7238)	
Sumpter Bayou:	
At confluence with Gilbert Lateral, approximately 1,800 feet downstream of Lightning Street	*11
At western corporate limit, approximately 700 feet upstream of Drost Street	*12
Maps are available for inspection at the City of Sulphur Public Works Department, 500 North Huntington Street, Sulphur, Louisiana.	
MONTANA	
Ravalli County (and Incorporated Areas) (FEMA Docket No. 7238)	
Bitterroot River:	
At Ravalli-Missoula County boundary	[1] +3,194
Approximately 3,400 feet upstream of Stevensville cutoff	[1] +3,279
Approximately 4,600 feet upstream of Stevensville cutoff	[1] +3,280
Just upstream of U.S. Highway 93	[2] +3,517
Approximately 4,400 feet upstream of West Bridge Road	[2] +3,558
Approximately 1.2 miles upstream of West Bridge Road	[2] +3,563
At U.S. Highway 93	[3] +3,956
Approximately 2.4 miles upstream of U.S. Highway 93	[3] +4,002
Left Branch of Bitterroot River:	
At Ravalli-Missoula County boundary	[1] +3,194
Approximately 1.5 miles upstream of Ravalli-Missoula County boundary	[1] +3,203
Maps are available for inspection at the City of Hamilton Office of Building Development, 223 South Second Street, Hamilton, Montana.	
Maps are available for inspection at the Ravalli County Planning Office, 205 Bedford, Hamilton, Montana.	
Maps are available for inspection at the City of Stevensville City Hall, 219 College, Stevensville, Montana.	
Maps are available for inspection at the Town of Darby Town Hall, 101 East Tanner, Darby, Montana.	
NEBRASKA	
Columbus (City), Platte County (FEMA Docket No. 7238)	
Loup River:	
Approximately 1,000 feet upstream of City of Columbus eastern extraterritorial limit	*1,425
At City of Columbus western extraterritorial limit	*1,466
Maps are available for inspection at the City Engineer's Office, 2424 14th Street, Columbus, Nebraska.	
Platte Center (Village), Platte County (FEMA Docket No. 7238)	
Em Creek:	
Approximately 1,700 feet downstream of Fourth Street	*1,530
Just upstream of First Street	*1,546
Shell Creek:	
At the Union Pacific Railroad	*1,532
Approximately 2,500 feet west of F Street	*1,532
Maps are available for inspection at the Village of Platte Center Auditorium, 315 Fourth Street, Platte Center, Nebraska.	
Platte County (Unincorporated Areas) (FEMA Docket No. 7238)	
Elm Creek:	
Approximately 1,700 feet downstream of Fourth Street	*1,530
Approximately 1 mile upstream of Platte County Route 381	*1,558
Shell Creek:	
Approximately 1 mile downstream of the Union Pacific Railroad	*1,522
Approximately 3,000 feet upstream of the Union Pacific Railroad	*1,533
Maps are available for inspection at the Platte County Highway Department, 2610 14th Street, Columbus, Nebraska.	
OKLAHOMA	
Hartshorne (City), Pittsburg County (FEMA Docket No. 7238)	
Blue Creek:	
Approximately 650 feet downstream of Seneca Avenue	*673
Just upstream of Modoc Avenue	*691
Maps are available for inspection at the City of Hartshorne City Hall, 1101 Penn Avenue, Hartshorne, Oklahoma.	
OREGON	
Lincoln City (City), Lincoln County (FEMA Docket No. 7222)	
Pacific Ocean:	
On the ocean side of Oregon Coast Highway at its crossing of Schooner Creek	*10
Along the ocean side of Oregon Coast Highway at its crossing of the D River	*21
Along the entire portion of Southwest Anchor Avenue between 32nd and 36th Streets	*24
Maps are available for inspection at the City of Lincoln City Planning Department, 801 Southwest Highway 101, Lincoln City, Oregon.	
TEXAS	
Newton County (Unincorporated Areas) (FEMA Docket No. 7181)	
Sabine River:	
At the border of Orange and Newton Counties	*17
At the State Highway 12 bridge	*24
At the U.S. Highway 190 bridge	*72
At the State Highway 63 bridge	*107
At the border of Newton County and Sabine Parish	*117
Maps are available for inspection at the Newton County Courthouse, Highway 190 West, Newton, Texas.	
WYOMING	
Cokeville (Town), Lincoln County (FEMA Docket No. 7238)	
South Fork:	
Approximately 1,100 feet downstream of Pacific Street at the northwestern border of the Town of Cokeville corporate limits	*6,186
Approximately 1,200 feet upstream of U.S. Highway 30N at the northeastern border of the Town of Cokeville corporate limits.	*6,208
Spring Creek:	
Approximately 3,000 feet downstream of East Main Street at the northern boundary of the Town of Cokeville corporate limits	*6,181

Source of flooding and location	#Depth in feet above ground. *Elevation in feet (NGVD)
Approximately 2,000 feet upstream of private drive at the northeastern border of the Town of Cokeville corporate limits	*6,213
Maps are available for inspection at the Town Clerk's Office, 110 Pine Street, Cokeville, Wyoming.	
Lincoln County (Unincorporated Areas) (FEMA Docket No. 7238)	
Smiths Fork:	
Approximately 2,600 feet downstream of Pacific Street	*6,183
Approximately 2,350 feet upstream of U.S. Highway 30N	*6,217
South Fork:	
Approximately 2,100 feet downstream of Union Pacific Railroad	*6,183
Approximately 1,600 feet upstream of U.S. Highway 30N	*6,215
Spring Creek:	
Approximately 2,800 feet upstream of U.S. Highway 30N	*6,218
Approximately 1,000 feet upstream of Union Pacific Railroad	*6,180
Maps are available for inspection at the Lincoln County Planning Office, Beech Street and Topaz Avenue, Kemmerer, Wyoming.	

[1] To convert from NAVD to NGVD, subtract 3.5 feet.
[2] To convert from NAVD to NGVD, subtract 3.6 feet.
[3] To convert from NAVD to NGVD, subtract 3.7 feet.

(Catalog of Federal Domestic Assistance No. 83.100, ''Flood Insurance'')

Dated: May 11, 1998.

Michael J. Armstrong,

Associate Director for Mitigation.

[FR Doc. 98–13733 Filed 5–21–98; 8:45 am]

BILLING CODE 6718–04–P

FEDERAL EMERGENCY MANAGEMENT AGENCY

44 CFR Part 67

Final Flood Elevation Determinations

AGENCY: Federal Emergency Management Agency (FEMA).

ACTION: Final rule.

SUMMARY: Base (1% annual chance) flood elevations and modified base flood elevations are made final for the communities listed below. The base flood elevations and modified base flood elevations are the basis for the floodplain management measures that each community is required either to adopt or to show evidence of being already in effect in order to qualify or remain qualified for participation in the National Flood Insurance Program (NFIP).

EFFECTIVE DATES: The date of issuance of the Flood Insurance Rate Map (FIRM) showing base flood elevations and modified base flood elevations for each community. This date may be obtained by contacting the office where the maps are available for inspection as indicated on the table below.

ADDRESSES: The final base flood elevations for each community are available for inspection at the office of the Chief Executive Officer of each community. The respective addresses are listed in the table below.

FOR FURTHER INFORMATION CONTACT: Matthew B. Miller, P.E., Chief, Hazards Study Branch, Mitigation Directorate, 500 C Street SW., Washington, DC 20472, (202) 646–3461.

SUPPLEMENTARY INFORMATION: The Federal Emergency Management Agency (FEMA or Agency) makes final determinations listed below of base flood elevations and modified base flood elevations for each community listed. The proposed base flood elevations and proposed modified base flood elevations were published in newspapers of local circulation and an opportunity for the community or individuals to appeal the proposed determinations to or through the community was provided for a period of ninety (90) days. The proposed base flood elevations and proposed modified base flood elevations were also published in the **Federal Register**.

This final rule is issued in accordance with section 110 of the Flood Disaster Protection Act of 1973, 42 U.S.C. 4104, and 44 CFR part 67.

The Agency has developed criteria for floodplain management in floodprone areas in accordance with 44 CFR part 60.

Interested lessees and owners of real property are encouraged to review the proof Flood Insurance Study and Flood Insurance Rate Map available at the address cited below for each community.

The base flood elevations and modified base flood elevations are made final in the communities listed below. Elevations at selected locations in each community are shown.

National Environmental Policy Act

This rule is categorically excluded from the requirements of 44 CFR part 10, Environmental Consideration. No environmental impact assessment has been prepared.

Regulatory Flexibility Act

The Associate Director, Mitigation Directorate, certifies that this rule is exempt from the requirements of the Regulatory Flexibility Act because final or modified base flood elevations are required by the Flood Disaster Protection Act of 1973, 42 U.S.C. 4104, and are required to establish and maintain community eligibility in the National Flood Insurance Program. No regulatory flexibility analysis has been prepared.

Regulatory Classification

This final rule is not a significant regulatory action under the criteria of section 3(f) of Executive Order 12866 of September 30, 1993, Regulatory Planning and Review, 58 FR 51735.

Executive Order 12612, Federalism

This rule involves no policies that have federalism implications under Executive Order 12612, Federalism, dated October 26, 1987.

Executive Order 12778, Civil Justice Reform

This rule meets the applicable standards of section 2(b)(2) of Executive Order 12778.

Administrative practice and procedure, Flood insurance, Reporting and recordkeeping requirements.

Accordingly, 44 CFR part 67 is amended as follows:

PART 67—[AMENDED]

1. The authority citation for part 67 continues to read as follows:

Authority: 42 U.S.C. 4001 *et seq.*; Reorganization Plan No. 3 of 1978, 3 CFR, 1978 Comp., p. 329; E.O. 12127, 44 FR 19367, 3 CFR, 1979 Comp., p. 376.

§ 67.11 [Amended]

2. The tables published under the authority of § 67.11 are amended as follows:

Source of flooding and location	# Depth in feet above ground. *Elevation in feet (NGVD)
ALABAMA	
Huntsville (City), Madison County (FEMA Docket Nos. 7199 and 7243)	
Aldridge Creek:	
At confluence with Tennessee River	*576
Downstream side of Drake Avenue	*679
Big Cove Creek:	

Source of flooding and location	# Depth in feet above ground. *Elevation in feet (NGVD)
Approximately 0.75 mile upstream of confluence with Flint River	*601
Downstream side of Dug Hill Road	*654
Bradford Creek:	
At confluence with Barren Fork Creek	*570
At upstream side of I–565	*616
Dry Creek 1:	
Approximately 800 feet upstream of confluence with Broglan Branch	*666
Approximately 1,400 feet upstream of Mastin Lake Road	*747
Dry Creek 2:	
Approximately 550 feet downstream of Indian Creek Road	*672
Approximately 1.02 miles upstream of Pulaski Pike	*818
Tributary 1 to Dry Creek 2:	
At confluence with Dry Creek 2	*705
Approximately 2,100 feet upstream of Rideout Road	*746
Tributary 2 to Dry Creek 2:	
At Nick Fitcheard Road	*736
Approximately 0.6 mile downstream of Garner Road	*769
Tributary 3 to Dry Creek 2:	
Backwater area surrounding intersection of Nick Fitcheard Road and Bob Wade Lane	*764
Approximately 1.4 miles upstream of Bob Wade Lane	*780
Tributary 4 to Dry Creek 2:	
At confluence with Dry Creek 2	*770
Approximately 2,000 feet upstream of Pulaski Pike	*789
Fagan Creek:	
At confluence with Huntsville Spring Branch	*610
Approximately 0.65 mile upstream of Tel-Fair Drive	*715
Indian Creek:	
At State Route 20	*613
Approximately 0.7 mile upstream of confluence of Tributary 2 to Indian Creek	*685
Tributary 1 to Indian Creek:	
Approximately 750 feet upstream of confluence with Indian Creek	*618
Approximately 50 feet upstream of railroad	*634
Tributary 2 to Indian Creek:	
At confluence with Indian Creek	*673
Approximately 1,000 feet upstream of confluence with Indian Creek	*675
Tributary 3 to Indian Creek:	
Approximately 250 feet downstream of Jeff Road	*715
Approximately 500 feet downstream of U.S. Route 72	*756
Knox Creek:	
Approximately 3,000 feet downstream of Balch Road	*692
At confluence of Tributary to Knox Creek	*738
Tributary to Knox Creek:	
At confluence with Knox Creek	*738
At Capshaw Road	*752
Limestone Creek:	
At State Route 20	*573
At railroad	*585
Miller Branch:	
Approximately 1,000 feet east of intersection of Boeing Circle and Boeing Boulevard	*571
Approximately 2.04 miles upstream of Wall-Triana Highway	*573
Mountain Brook Branch:	
At confluence with Fagan Creek	*647
Approximately 1,040 feet upstream of Darnell Street	*703
Beaverdam Creek 2:	
Approximately 500 feet upstream of State Route 20	*570
At Old Highway 20	*572
Betts Spring Branch:	
At confluence with Barren Fork Creek	*570
At Lady Ann Lake Dam	*577
Chase Creek:	
At confluence with Flint River	*660
Approximately 0.5 mile upstream of Old Gurley Road	*732
Flint River:	
Approximately 300 feet downstream of confluence of Chase Creek	*660
Approximately 1.8 miles upstream of confluence of Chase Creek	*665
Lady Ann Lake:	
Shoreline within community	*577
Peevey Creek:	
Approximately 0.6 mile upstream of confluence with Robinson Mill Creek	*607
Approximately 100 feet upstream of Little Cove Road	*628
Piney Creek:	
At Joe Wheeler Highway	*564
At Roberts Road	*572
Tennessee River:	
Approximately 0.6 mile upstream of confluence of Unnamed Tributary to Tennessee River	*575
Approximately 2.5 miles downstream of confluence of Flint River	*577
Withers Spring Branch:	
Approximately 1,200 feet downstream of Airport Road	*567
Approximately 0.48 mile upstream of Old Highway 20	*661
McDonald Creek:	
Approximately 0.5 mile upstream of Patton Road	*603
Approximately 1,500 feet downstream of confluence of Unnamed Tributary to McDonald Creek	*620
Blue Spring Creek:	
Upstream side of Leland Drive	*702
Downstream side of Pulaski Pike	*750
Maps available for inspection	
At the Huntsville City Hall, 320 Fountain Circle, Huntsville, Alabama.	
———	
Madison County (Unincorporated Areas) (FEMA Docket Nos. 7199 and 7243)	
Aldridge Creek:	
At confluence with Tennessee River	*576
Approximately 0.52 mile upstream of railroad bridge	*576
Big Cove Creek:	
Approximately 0.75 mile upstream of confluence with Flint River	*601
At Dug Hill Road	*654
Bradford Creek:	
At confluence with Barren Fork Creek	*570
Approximately 2,000 feet downstream of Palmer Road	*641
Brier Fork Flint River:	
At confluence with Flint River	*672
Approximately 130 feet upstream of confluence of Unnamed Tributary to Brier Fork Flint River	*742
Unnamed Tributary to Brier Fork Flint River:	
At confluence with Brier Fork Flint River	*742
At upstream crossing of U.S. Route 431	*790
Chase Creek:	
At confluence with Flint River	*660
Approximately 650 feet upstream of Old Gurley Road	*721
Beaverdam Creek 1:	
At confluence with Brier Fork Flint River	*701
At Mount Lebanon Road	*755
Dry Creek 2:	
At confluence with Indian Creek	*672
Approximately 300 feet downstream of Indian Creek Road	*673
Approximately 1,100 feet upstream of confluence of Tributary 4 to Dry Creek 2	*773
Tributary 1 to Dry Creek 2:	
At confluence with Dry Creek 2	*705
Approximately 2,300 feet upstream of Rideout Road	*749
Tributary 2 to Dry Creek 2:	
At confluence of Dry Creek	*726
At Rideout Road	*732
Approximately 20 feet downstream of Garner Road	*782
Tributary 3 to Dry Creek 2:	
At confluence with Dry Creek 2	*759
At downstream side of Bob Wade Lane	*764
Tributary 4 to Dry Creek 2:	
At confluence with Dry Creek 2	*770
Approximately 500 feet upstream of confluence with Dry Creek 2	*773
Flint River:	
At confluence with Tennessee River	*578
Upstream side of Ryland Pike	*646
Approximately 0.5 mile upstream of Ryland Pike	*647

Source of flooding and location	# Depth in feet above ground. *Elevation in feet (NGVD)
At confluence of Brier Fork Flint River	*672
Huntsville Spring Branch:	
Approximately 260 feet downstream of Martin Road	*575
Approximately 1,000 feet upstream of Martin Road	*575
Indian Creek:	
At State Route 20	*613
Upstream side of Old Moravia Road	*701
Tributary 1 to Indian Creek:	
At confluence with Indian Creek	*616
Approximately 750 feet upstream of railroad	*639
Tributary 2 to Indian Creek:	
Approximately 1,000 feet upstream of confluence with Indian Creek	*675
Approximately 4,075 feet upstream of confluence with Indian Creek	*700
Tributary 3 to Indian Creek:	
At confluence with Indian Creek	*699
Approximately 160 feet upstream of U.S. Route 72	*762
Knox Creek:	
At County Line Road	*680
Approximately 1,500 feet downstream of confluence of Tributary to Knox Creek	*733
Mill Creek:	
Approximately 3,100 feet upstream of Browns Ferry Road	*676
Approximately 250 feet downstream of Angela Drive	*731
Peevey Creek:	
Approximately 0.6 mile upstream of confluence of Robinson Mill Creek	*607
Approximately 0.4 mile upstream of Little Cove Road	*635
Tennessee River:	
At Limestone/Madison County boundary	*567
At confluence of Paint Rock River	*579
Unnamed Tributary to Tennessee River:	
At confluence with Tennessee River	*575
At Sockwell Drive	*575
Yellow Bank Creek:	
At confluence with Flint River	*580
At Oak Grove Road	*580
Tributary to Knox Creek:	
Approximately 500 feet upstream of confluence with Knox Creek	*739
At upstream side of Wall-Triana Highway	*743
Miller Branch:	
At Wall-Triana Highway	*571
Approximately 2 miles upstream of Wall-Triana Highway	*573
Betts Spring Road:	
At confluence with Barren Fork Creek	*570
Approximately 0.7 mile upstream of James Record Road	*576
McDonald Creek:	
At upstream side of Patton Road	*588
Approximately 1,500 feet downstream of confluence of Unnamed Tributary to McDonald Creek	*620
Tennessee River (backwater area):	
At a point approximately 1.1 miles southwest of the intersection of Martin Road and U.S. Route 231	*575
Maps available for inspection at the Madison County Engineering Building, 814 Cook Avenue, Huntsville, Alabama.	
New Hope (City), Madison County (FEMA Docket Nos. 7199 and 7243)	
Yellow Bank Creek:	
At Oak Grove Road	*580
Approximately 0.57 mile upstream of West Carpenter Road	*592
Tributary to Yellow Bank Creek:	
Approximately 600 feet upstream of confluence with Yellow Bank Creek	*581
Approximately 1.180 feet upstream of Maple Road	*588
Maps available for inspection at the New Hope City Hall, 5415 Main Drive, New Hope, Alabama.	
CONNECTICUT	
Fairfield (Town), Fairfield County (FEMA Docket No. 7247)	
Londons Brook:	
Approximately 430 feet downstream of State Route 59	*107
Approximately 1,100 feet upstream of Casmir Drive	*173
Londons Brook Divided Flow:	
At confluence with Londons Brook	*118
At Bond Street	*129
Maps available for inspection at the Town of Fairfield Planning and Zoning Department, 725 Old Post Road, Fairfield, Connecticut.	
GEORGIA	
Charlton County (Unincorporated Areas) (FEMA Docket No. 7243)	
St. Mary's River:	
Approximately 500 feet downstream of County boundary	*9
Approximately 1.0 mile upstream of upstream crossing of State Route 94	*116
Maps available for inspection at the Charlton County Assessor's Office, 100 North 3rd Street, Folkston, Georgia.	
KENTUCKY	
Elkhorn City (City), Pike County (FEMA Docket No. 7190)	
Elkhorn Creek:	
At the confluence with Russell Fork	*786
Approximately 700 feet upstream of Higgins Road	*800
Maps available for inspection at the Elkhorn City Hall, corner of Patty Lovelace Drive and Carson Island Road, Building 395, Elkhorn City, Kentucky.	
Pike County (Unincorporated Areas) (FEMA Docket Nos. 7190 and 7247)	
Johns Creek:	
Approximately 100 feet downstream of State Route 3227	*715
Approximately 50 feet upstream of Stinking Branch Road	*839
Long Fork:	
Approximately 500 feet upstream of the confluence with Shelby Creek	*834
Approximately 0.3 mile upstream of confluence of Sugarcamp Branch	*959
Elkhorn Creek:	
Approximately 750 feet downstream of Higgins Road	*792
Approximately 250 feet upstream of the confluence of Upper Pigeon Branch	* 1,233
Ashcamp Branch:	
At the confluence with Elkhorn Creek	*1,062
Tug Fork:	
Approximately 0.35 mile upstream of confluence of Turkey Creek	*663
Approximately 0.5 mile upstream of confluence of Sycamore Creek	*674
Shelby Creek:	
Approximately 1.14 mile upstream of confluence with Levisa Fork	*688
Approximately 0.26 mile upstream of Low Water Crossing	*821
Maps available for inspection at the Pike County Courthouse, Judge Executive's Office, 324 Main Street, Pikeville, Kentucky.	
Pikeville (City), Pike County (FEMA Docket Nos. 7190 and 7247)	
Pikeville Pond:	
Approximately 800 feet upstream of the confluence with Levisa Fork	*670
Approximately 1,750 feet upstream of Baird Avenue	*686
Harolds Branch:	
At confluence with Pikeville Pond	*672

Source of flooding and location	# Depth in feet above ground. *Elevation in feet (NGVD)
Approximately 290 feet upstream of confluence with Pikeville Pond	*672
Ferguson Creek:	
At confluence with Pikeville Pond	*670
Approximately 0.25 mile upstream of confluence with Pikeville Pond	*670
Maps available for inspection at the Building Inspector's Office, 260 Hambley Boulevard, Pikeville, Kentucky.	
MARYLAND	
Caroline County (Unincorporated Areas) (FEMA Docket No. 7243)	
Miles Branch:	
Downstream corporate limits	*12
At Wright Road	*37
Maps available for inspection at the Caroline County Planning Office, 109 Market Street, Caroline County Courthouse, Second Floor, Denton, Maryland.	
Federalsburg (Town), Caroline and Dorchester Counties (FEMA Docket No. 7243)	
Miles Branch:	
At Reliance Avenue (State Route 313)	*22
Approximately 0.8 mile upstream of Reliance Avenue	*34
Maps available for inspection at the Federalsburg Town Hall, 118 North Main Street, Federalsburg, Maryland.	
MINNESOTA	
Chaska (City), Carver County (FEMA Docket No. 7247)	
East Creek:	
Approximately 1,875 feet upstream of confluence with Minnesota River	*712
Approximately 100 feet upstream of North Valley Road	*775
Minnesota River:	
At upstream side of Milwaukee Road Railroad	*724
Approximately 1,320 feet upstream of Milwaukee Road Railroad	*724
Old Clay Hole:	
Entire shoreline within community	*729
Ponding Areas at Outlet A:	
Entire shoreline within community	*719
Courthouse Lake:	
Entire shoreline within community	*703
Maps available for inspection at the City of Chaska Engineer's Office, One City Hall Plaza, Chaska, Minnesota.	

Source of flooding and location	# Depth in feet above ground. *Elevation in feet (NGVD)
NEW YORK	
Camden (Town), Oneida County (FEMA Docket No. 7243)	
Cobb Brook:	
At confluence with West Branch Fish Creek	*472
Approximately 0.82 mile upstream of Shady Lane	*574
Mad River:	
At downstream corporate limits	*520
Approximately 100 feet upstream of River Road	*597
West Branch Fish Creek:	
Approximately 0.4 mile downstream of Brewer Road	*461
Approximately 1.12 miles upstream of State Route 13	*526
Maps available for inspection at the Camden Town Hall, Code Enforcement Office, Second Street, Camden, New York.	
Endicott (Village), Broome County (FEMA Docket No. 7243)	
Susquehanna River:	
Approximately 1,500 feet upstream of the confluence of Nanticoke Street	*829
Approximately 600 feet upstream of the Vestal Avenue bridge	*830
Maps available for inspection at the Endicott Municipal Building, 1009 East Main Street, Endicott, New York.	
Rome (City), Oneida County (FEMA Docket No. 7243)	
Wood Creek:	
Approximately 600 feet downstream of Erie Canal Triple Culvert	*414
Approximately 100 feet upstream of West Dominick Street	*438
Maps available for inspection at the City Engineer's Office, Rome City Hall, Liberty Plaza, Rome, New York.	
NORTH CAROLINA	
Catawba County (Unincorporated Areas) (FEMA Docket No. 7231)	
Catawba River (Lake Hickory):	
At Oxford Dam	*935
At confluence of Snow Creek	*935
Catawba River (Lookout Shoals Lake):	
At Lookout Shoals Dam	*847
Approximately 4.3 miles upstream of Lookout Shoals Dam	*849
Catawba River (Lake Norman):	
At downstream county boundary	*761
Approximately 0.6 mile downstream of NC 1004	*763
Elk Shoal Creek:	

Source of flooding and location	# Depth in feet above ground. *Elevation in feet (NGVD)
Approximately 875 feet upstream of confluence with Catawba River	*849
Approximately 750 feet upstream of State Route 1700	*849
Dellinger Creek:	
At confluence with Elk Shoal Creek	*850
Approximately 850 feet upstream of confluence with Elk Shoal Creek	*853
Maps available for inspection at the Catawba County Zoning Office, 100A Southwest Boulevard, Newton, North Carolina.	
Watauga County (Unincorporated Areas) (FEMA Docket No. 7243)	
Watauga River:	
Approximately 0.75 mile upstream of Breached Dam	*2,905
Approximately 0.79 mile upstream of Aldridge Road (SR 1594)	*3,240
Maps available for inspection at the Watauga County Planning and Inspections Department, County Courthouse, 842 West King Street, Suite 7, Boone, North Carolina.	
PENNSYLVANIA	
Carroll (Township), Perry County (FEMA Docket No. 7235)	
Sherman Creek:	
Approximately 0.43 mile downstream of State Route 34	*442
Downstream side of Pisgah State Road	*457
Unnamed Tributary to Sherman Creek:	
Confluence with Sherman Creek	*446
Approximately 350 feet downstream of Private Road	*447
Maps available for inspection at the Office of the Township Secretary, 5235 Spring Road, Shermans Dale, Pennsylvania.	
WISCONSIN	
Avoca (Village), Iowa County (FEMA Docket No. 7243)	
Wisconsin River:	
At upstream corporate limits	*688
At downstream corporate limits	*686
Maps available for inspection at the Avoca Village Hall, 407 Front Street, Avoca, Wisconsin.	
Boscobel (City), Grant County (FEMA Docket No. 7243)	
Wisconsin River:	

Source of flooding and location	# Depth in feet above ground. *Elevation in feet (NGVD)
Approximately 0.91 mile downstream of U.S. Route 61	*655
Approximately 0.56 mile upstream of U.S. Route 61	*657
Sanders Creek:	
At U.S. Route 61	*657
Approximately 90 feet upstream of upstream corporate limits	*678
Maps available for inspection at the Boscobel City Hall, 1006 Wisconsin Avenue, Boscobel, Wisconsin.	
Iowa County (Unincorporated Areas) (FEMA Docket No. 7227)	
Wisconsin River:	
At downstream county boundary	*680
At upstream county boundary	*731
Maps available for inspection at the Iowa County Zoning Office, 222 North Iowa Street, Dodgeville, Wisconsin.	
Manitowoc County (Unincorporated Areas) (FEMA Docket No. 7243)	
Sheboygan River:	
At county boundary	*845
At corporate limits of Kiel (State Routes 67 and 32)	*882
Maps available for inspection at the Manitowoc County Planning & Park Commission, 4319 Expo Drive, Manitowoc, Wisconsin.	
Merrill (City), Lincoln County (FEMA Docket No. 7247)	
Wisconsin River:	
Approximately 1.1 miles downstream of U.S. Route 51	*1,241
Approximately 500 feet upstream of Alexander Dam	*1,276
Prairie River:	
At the confluence with Wisconsin River	*1,252
Approximately 1,480 feet upstream of Third Street	*1,259
Devil Creek:	
At the confluence with Wisconsin River	*1,254
At Heldt Street	*1,266
Maps available for inspection at the City of Merrill Building Inspector/Zoning Administrator's Office, Merrill City Hall, 1004 East First Street, Merrill, Wisconsin.	

(Catalog of Federal Domestic Assistance No. 83.100, ''Flood Insurance.'')

Dated: May 11, 1998.

Michael J. Armstrong,

Associate Director for Mitigation.

[FR Doc. 98–13732 Filed 5–21–98; 8:45 am]

BILLING CODE 6718–04–P

DEPARTMENT OF DEFENSE

48 CFR Parts 225 and 252

[DFARS Case 97–D321]

Defense Federal Acquisition Regulation Supplement; Waiver of Domestic Source Restrictions

AGENCY: Department of Defense (DoD).

ACTION: Final rule.

SUMMARY: The Director of Defense Procurement has adopted as final, with changes, an interim rule that was published in the **Federal Register** on February 4, 1998. The rule amends the Defense Federal Acquisition Regulation Supplement (DFARS) to implement Section 811 of the National Defense Authorization Act for Fiscal Year 1998. Section 811 limits the authority for waiver of the domestic source restrictions of 10 U.S.C. 2534(a).

EFFECTIVE DATE: May 22, 1998.

FOR FURTHER INFORMATION CONTACT: Ms. Amy Williams, (703) 602–0131.

SUPPLEMENTARY INFORMATION:

A. Background

An interim rule with request for comments was published at 63 FR 5744 on February 4, 1998. The rule amended DFARS Parts 225 and 252 to implement Section 811 of the National Defense Authorization Act for Fiscal Year 1998 (Pub. L. 105–85). Section 811 provides that DoD may exercise the authority of 10 U.S.C. 2534(d), to waive the domestic source restrictions of 10 U.S.C. 2534(a), only if the waiver is made for a particular item and for a particular foreign country. 10 U.S.C. 2534(a) contains domestic source restrictions applicable to procurement of the following items: Buses, chemical weapons antidote, components for naval vessels (including air circuit breakers, anchor and mooring chain, and totally enclosed lifeboats), and ball and roller bearings.

One source submitted comments in response to the interim rule. The comments were considered in the formation of the final rule. The final rule adds guidance to clarify that, for contracts entered into prior to the effective date of a waiver, provided adequate consideration is received to modify the contract, such waiver shall be applied as directed or authorized in the waiver to (1) subcontracts entered into on or after the effective date of the waiver; and (2) options for the procurement of items that are exercised after the effective date of the waiver, if the option prices are adjusted for any reason other than the application of the waiver.

B. Regulatory Flexibility Act

DoD certifies that this final rule will not have a significant economic impact on a substantial number of small entities within the meaning of the Regulatory Flexibility Act, 5 U.S.C. 601, *et seq.*, because there are no known small business manufacturers of buses, air circuit breakers, or the restricted chemical weapons antidote; the acquisition of anchor and mooring chain, totally enclosed lifeboat survival systems, and noncommercial ball and roller bearings is presently restricted to domestic sources by defense appropriations acts; and the restrictions of 10 U.S.C. 2534(a) do not apply to purchases of commercial items incorporating ball or roller bearings.

C. Paperwork Reduction Act

The Paperwork Reduction Act does not apply, because this final rule does not impose any information collection requirements that require the approval of the Office of Management and Budget under 44 U.S.C 3501, et seq.

List of Subjects in 48 CFR Parts 225 and 252

Government procurement.

Michele P. Peterson,

Executive Editor, Defense Acquisition Regulations Council.

Interim Rule Adopted as Final With Changes

Accordingly, the interim rule amending 48 CFR Parts 225 and 252, which was published at 63 FR 5744 on February 4, 1998, is adopted as final with the following changes:

1. The authority citation for 48 CFR Parts 225 and 252 continues to read as follows:

Authority: 41 U.S.C. 421 and 48 CFR Chapter 1.

PART 225—FOREIGN ACQUISITION

2. Section 225.7005 is amended by adding paragraph (a)(4) to read as follows:

225.7005 Waiver of certain restrictions.

* * * * *

(a) * * *

(4) For contracts entered into prior to the effective date of a waiver, provided adequate consideration is received to modify the contract, such waiver shall be applied as directed or authorized in the waiver to—

(i) Subcontracts entered into on or after the effective date of the waiver; and

(ii) Options for the procurement of items that are exercised after the effective date of the waiver, if the option

prices are adjusted for any reason other than the application of the waiver.

* * * * *

3. Section 225.7019–3 is amended by adding paragraph (b)(4) to read as follows:

225.7019–3 Waiver.

* * * * *

(b) * * *

(4) For contracts entered into prior to the effective date of a waiver, provided adequate consideration is received to modify the contract, such waiver shall be applied as directed or authorized in the waiver to—

(1) Subcontracts entered into on or after the effective date of the waiver; and

(ii) Options for the procurement of items that are exercised after the effective date of the waiver, if the option prices are adjusted for any reason other than the application of the waiver.

* * * * *

[FR Doc. 98–13741 Filed 5–21–98; 8:45 am]

BILLING CODE 5000–04–M

NATIONAL AERONAUTICS AND SPACE ADMINISTRATION

48 CFR Part 1816

Revision to the NASA FAR Supplement on Technical Performance Incentive Guidance.

AGENCY: National Aeronautics and Space Administration (NASA).

ACTION: Final rule.

SUMMARY: This is a final rule amending the NASA FARSupplement (NFS) to correct inconsistencies on technical performance incentive guidance.

EFFECTIVE DATE: May 22, 1998.

FOR FURTHER INFORMATION CONTACT: Tom O'Toole, NASA Office of Procurement, Contract Management Division (Code HK), (202) 358–0478.

SUPPLEMENTARY INFORMATION:

Background

NFS section 1816.402–270, NASA Technical Performance Incentives, requires the use of positive and negative performance incentives in hardware contracts greater than $25M unless waived in writing by the Center Director. New section 1816.402, Application of Predetermined, Formula-Type Incentives, was added as a final rule in the March 17, 1998 **Federal Register** (63 FR 12997–12998). This section provided guidance on the appropriate selection and use of positive and negative performance incentives, but did not change the mandatory requirement in 1816.402–270 which appears to preempt those guidelines in certain circumstances. This incongruity is rectified by adding language to 1816.402–270 stating that NASA has considered the guidelines in 1816.402 and has determined that performance incentives are appropriate for, and must be used in, hardware contracts greater than $25M. Additional administrative revisions are made to indicate that this policy does not apply to commercial acquisitions under FAR Part 12 and that negative incentives are not required for contracts which already require total contractor liability for product performance.

Impact

NASA certifies that this regulation will not have a significant economic impact on a substantial number of small business entities under the RegulatoryFlexibility Act (5 U.S.C. 601 *et seq.*). This final rule does not impose any reporting requirements or recordkeeping requirements subject to the Paperwork Reduction Act.

List of Subjects in 48 CFR Part 1816

Government procurement.

Deidre A. Lee,

Associate Administrator for Procurement.

Accordingly, 48 CFR Part 1816 is amended as follows:

PART 1816—TYPES OF CONTRACTS

1. The authority citation for 48 CFR Part 1816 continues to read as follows:

Authority: 42 U.S.C. 2473(c)(1).

2. In section 1816.402–270, paragraphs (a), (b), and (c) are revised to read as follows:

1816.402–270 NASA technical performance incentives.

(a) Pursuant to the guidelines in 1816.402, NASA has determined that a performance incentive shall be included in all contracts based on performance-oriented documents (see FAR 11.101(a)), except those awarded under the commercial item procedures of FAR part 12, where the primary deliverable(s) is (are) hardware with a total value (including options) greater than $25 million. Any exception to this requirement shall be approved in writing by the Center Director. Performance incentives may be included in hardware contracts valued under $25 million acquired under procedures other than FAR Part 12 at the discretion of the procurement officer upon consideration of the guidelines in 1816.402. Performance incentives, which are objective and measure hardware performance after delivery and acceptance, are separate from other incentives, such as cost or delivery incentives.

(b) When a performance incentive is used, it shall be structured to be both positive and negative based on hardware performance after delivery and acceptance, unless the contract type requires complete contractor liability for product performance (e.g., fixed price). In this latter case, a negative incentive is not required. In structuring the incentives, the contract shall establish a standard level of performance based on the salient hardware performance requirement. This standard performance level is normally the contract's minimum performance requirement. No incentive amount is earned at this standard performance level. Discrete units of measurement based on the same performance parameter shall be identified for performance above and, when a negative incentive is used, below the standard. Specific incentive amounts shall be associated with each performance level from maximum beneficial performance (maximum positive incentive) to, when a negative incentive is included, minimal beneficial performance or total failure (maximum negative incentive). The relationship between any given incentive, either positive and negative, and its associated unit of measurement should reflect the value to the Government of that level of hardware performance. The contractor should not be rewarded for above-standard performance levels that are of no benefit to the Government.

(c) The final calculation of the performance incentive shall be done when hardware performance, as defined in the contract, ceases or when the maximum positive incentive is reached. When hardware performance ceases below the standard established in the contract and a negative incentive is included, the Government shall calculate the amount due and the contractor shall pay the Government that amount. Once hardware performance exceeds the standard, the contractor may request payment of the incentive amount associated with a given level of performance, provided that such payments shall not be more frequent than monthly. When hardware performance ceases above the standard level of performance, or when the maximum positive incentive is reached, the Government shall calculate the final performance incentive earned and

unpaid and promptly remit it to the contractor.

* * * * *

[FR Doc. 98–13778 Filed 5–21–98; 8:45 am]

BILLING CODE 7510–01–P

DEPARTMENT OF TRANSPORTATION

Federal Highway Administration

49 CFR Parts 365, 372, 373, 374, and 377

RIN 2125–AE41

Federal Motor Carrier Regulations; Authority Corrections

AGENCY: Federal Highway Administration (FHWA), DOT.

ACTION: Final rule; technical corrections.

SUMMARY: This document makes technical amendments to the authority statements for various FHWA motor carrier regulations in order to remove the obsolete authority citations provided in the subparts. This correction is necessary due to changes required by the ICC Termination Act of 1995 (ICCTA) and the transfer of certain regulatory functions to the FHWA from the former Interstate Commerce Commission (ICC). The effect of these amendments is to remove the outdated authority citations listed in the subparts.

DATES: This final rule is effective May 22, 1998.

FOR FURTHER INFORMATION CONTACT: Mr. Michael J. Falk, Office of the Chief Counsel, Motor Carrier Law Division, (202) 366–1384, Federal Highway Administration, 400 Seventh Street, S.W., Washington, D.C. 20590. Office hours are from 7:45 a.m. to 4:15 p.m., e.t., Monday through Friday, except Federal holidays.

SUPPLEMENTARY INFORMATION: On October 21, 1996, the FHWA published a final rule that transferred and redesignated certain motor carrier transportation regulations from chapter X of title 49, Code of Federal Regulations, to the FHWA in chapter III of that title. See Motor Carrier Transportation; Redesignation of Regulations From the Surface Transportation Board Pursuant to the ICC Termination Act of 1995 [61 FR 54706]. Another document also made technical amendments to former ICC regulations and was published on April 1, 1997. Technical Amendments to Former Interstate Commerce Commission Regulations in Accordance With the ICC Termination Act of 1995. [62 FR 15417]. The technical changes made in both of these documents were required by section 204 of the ICCTA, Public Law 104–88, 109 Stat. 803. Part 365, Rules for governing applications for operating authority, subpart D (formerly part 1181); part 372, Exemptions, commercial zones, and terminal areas, subparts A, B, and C (formerly parts 1047, 1048, and 1049, respectively); part 373, Receipts and bills, subparts A and B (formerly parts 1051 and 1081, respectively); part 374, Passenger carrier regulations, subparts A, B, C, and D (formerly parts 1055, 1061, 1063, and 1064, respectively); and part 377, Payment of transportation charges, subparts A and B (formerly parts 1052 and 1320, respectively) included in the new statutory authority at the part level, but inadvertently failed to remove the former ICC authority at the subpart levels. Accordingly, the FHWA removes the obsolete ICC authority citations in the subpart levels noted above and retains the current authority citations in the part levels which reflect the changes mandated by the ICCTA.

Rulemaking Analyses and Notices

This final rule makes only minor technical corrections to existing regulations by removing obsolete ICC authority citations at the subpart levels of FHWA regulations. This rule replaces outdated authority citations with current statutory authority and the regulatory standards are not changed in any way. Therefore, the FHWA finds good cause to adopt the rule without prior notice or opportunity for public comment [5 U.S.C. 553(b)]. The Department of Transportation's regulatory policies and procedures also authorize promulgation of the rule without prior notice because it is anticipated that such action would not result in the receipt of useful information. The FHWA is making this rule effective upon publication in the **Federal Register** because it imposes no new burdens and merely corrects existing regulations.

Executive Order 12866 (Regulatory Planning and Review) and DOT Regulatory Policies and Procedures

The FHWA has determined that this action is not a significant regulatory action within the meaning of Executive Order 12866 or significant within the meaning of Department of Transportation regulatory policies and procedures. Since this rulemaking action makes only technical corrections to the current regulations, it is anticipated that the economic impact of this rulemaking will be minimal; therefore, a full regulatory evaluation is not required.

Regulatory Flexibility Act

In compliance with the Regulatory Flexibility Act (Pub. L. 96–354, 5 U.S.C. 601–612), the FHWA has evaluated the effects of this rule on small entities. Based on the evaluation, and since this rulemaking action makes only technical corrections to the authority citations in current regulations, the FHWA hereby certifies that this action will not have a significant impact on a substantial number of small entities.

Unfunded Mandates Reform Act

This rule does not impose any unfunded mandates on State, local, or tribal governments as defined by the Unfunded Mandates Reform Act of 1995 (2 U.S.C. 1532).

Excutive Order 12612 (Federalism Assessment)

This action has been analyzed in accordance with the principles and criteria contained in Executive Order 12612, and it has been determined that this action does not have sufficient federalism implications to warrant the preparation of a federalism assessment.

Executive Order 12372 (Intergovernmental Review)

Catalog of Federal Domestic Assistance Program Number 20.217, Motor Carrier Safety. The regulations implementing Executive Order 12372 regarding intergovernmental consultation of Federal programs and activities do not apply to this program.

Paperwork Reduction Act

This action does not contain a collection of information requirement for purposes of the Paperwork Reduction Act of 1995, 44 U.S.C. 44 U.S.C. 3501 *et seq.*,

National Environmental Policy Act

The agency has analyzed this action for the purpose of the National Environmental Policy Act of 1969, as amended (42 U.S.C. 432 *et seq.*) and has determined that this action would not have any effect on the quality of the environment.

Regulation Identification Number

A regulation identification number (RIN) is assigned to each regulatory action listed in the Unified Agenda for Federal Regulations. The Regulatory Information Service Center publishes the Unified Agenda in April and October of each year. The RIN contained in the heading of this document can be used to cross reference this action with the Unified Agenda.

List of Subjects

49 CFR Part 365

Administrative practice and procedures, Brokers, Buses, Freight forwarders, Highways and roads, Motor carriers.

49 CFR Part 372

Buses, Commercial zones, Freight forwarders, Highway and roads, Motor carriers.

49 CFR Part 373

Buses, Highways and roads, Motor carriers, Reporting and recordkeeping requirements.

49 CFR Part 374

Baggage liability, Buses, Civil rights, Discrimination, Freight forwarders, Handicapped, Highways and roads, Motor carrier.

49 CFR Part 377

Credit, Freight forwarders, Highways and roads, Motor carriers.

Issued on: May 14, 1998.

Kenneth R. Wykle,

Federal Highway Administrator.

In consideration of the foregoing, the FHWA amends title 49, Code of Federal Regulations, chapter III, as set forth below:

PART 365—[AMENDED]

1. The authority citation for 49 CFR part 365 continues to read as follows:

Authority: 5 U.S.C. 553 and 559; 16 U.S.C. 1456; 49 U.S.C. 13101, 13301, 13901–13906, 14708, 31138, and 31144; 49 CFR 1.48.

1a. The authority citation for subpart D is removed.

PART 372—[AMENDED]

2. The authority citation for 49 CFR part 372 continues to read as follows:

Authority: 49 U.S.C. 13504 and 13506; 49 CFR 1.48.

2a. The authority citations for subparts A, B, and C are removed.

PART 373—[AMENDED]

3. The authority citation for part 373 continues to read as follows:

Authority: 49 U.S.C. 13301 and 14706; 49 CFR 1.48.

3a. The authority citations for subparts A and B are removed.

PART 374—[AMENDED]

4. The authority citation for part 374 continues to read as follows:

Authority: 49 U.S.C. 13301 and 14101; 49 CFR 1.48.

4a. The authority citations for subparts A, B, C, and D are removed.

PART 377—[AMENDED]

5. The authority citation for 49 CFR part 377 continues to read as follows:

Authority: 49 U.S.C. 13101, 13301, 13701–13702, 13706, 13707, and 14101; 49 CFR 1.48.

5a. The authority citations for subparts A and B are removed.

[FR Doc. 98–13436 Filed 5–21–98; 8:45 am]

BILLING CODE 4910–22–M

DEPARTMENT OF TRANSPORTATION

Surface Transportation Board

49 CFR Parts 1152 and 1155

[STB Ex Parte No. 566]

Rail Service Continuation Subsidy Standards

AGENCY: Surface Transportation Board, DOT.

ACTION: Final rule.

SUMMARY: The Surface Transportation Board (Board) is removing from the Code of Federal Regulations rules concerning standards for determining subsidies for the continuation of rail service on rail properties not transferred to Consolidated Rail Corporation (Conrail) under the Final System Plan pursuant to the Regional Rail Reorganization Act of 1973. It is also amending the regulations concerning offers of financial assistance to provide rules for the purchase or subsidization of rail lines that have been continuously subsidized since the inception of the Final System Plan.

EFFECTIVE DATE: June 21, 1998.

FOR FURTHER INFORMATION CONTACT: Beryl Gordon, (202) 565–1600. [TDD for the hearing impaired: (202) 565–1695.]

SUPPLEMENTARY INFORMATION: In a notice of proposed rulemaking (NPR) served and published in the **Federal Register** on August 8, 1997 (62 FR 42734), the Board proposed to remove the regulations at 49 CFR part 1155 that concern subsidy standards for certain rail lines of railroads in reorganization not included in the Final System Plan, described *infra*. The NPR noted that these regulations are based, at least partially, on statutes that are still in effect. 45 U.S.C. 744 (c) and (d). Under the ICC Termination Act of 1995, Public Law 104–88, 109 Stat. 803 (ICCTA),[1] however, the Rail Services Planning Office (RSPO), the statutory body that developed the regulations, has been abolished. *See* repealed 49 U.S.C. 10361–64. Moreover, the Board has in place analogous offer of financial assistance (OFA) regulations providing national subsidy standards. 49 CFR 1152.27. Finally, the NPR stated that the regional subsidy regime at 45 U.S.C. 744, which applies to ''rail service on rail properties of a railroad in reorganization,'' may be outdated and may apply only to a limited number of situations. Accordingly, we instituted this proceeding to determine whether these regulations may be eliminated in light of the national OFA standards, whether portions of the part 1155 regulations could be transferred to the national standards, or whether they have a continuing vitality and should be retained.

After considering the record, we will eliminate the part 1155 rules and modify the national OFA rules at 1152.27. Because the part 1155 rules have only limited applicability, it is unnecessary to maintain these detailed regulations. However, to provide an opportunity for rail service continuation and to deal with abandonments of lines that are still being subsidized, we are modifying our national OFA regulations at 49 CFR 1152.27 to require that the line owner give notice of the abandonment or discontinuance to enable interested persons to purchase or subsidize the line.

Background

Our NPR gave a detailed background for the part 1155 regulations and will be repeated only as necessary. The part 1155 rules were based on the Regional Rail Reorganization Act of 1973, Public Law 93–236, 87 Stat. 985, 45 U.S.C. 701 *et seq.* (3R Act), as amended by the Railroad Revitalization and Regulatory Reform Act of 1976 (4R Act), Public Law 94–210, 90 Stat. 127. In response to the bankruptcy of the Penn Central Transportation Company and seven other major railroads in the Northeast and Midwest,[2] the 3R Act provided for the development and ultimate approval by Congress of a Final System Plan (Plan) for the redesign of rail services in

[1] Effective January 1, 1996, the ICCTA abolished the Interstate Commerce Commission and established the Board within the Department of Transportation. Section 204(a) of the ICCTA provides that ''[t]he Board shall promptly rescind all regulations established by the [Interstate Commerce Commission] that are based on provisions of law repealed and not substantively reenacted by this Act.''

[2] The Lehigh Valley Railroad Company, the Central Railroad of New Jersey, the Ann Arbor Railroad Company, the Lehigh and Hudson Valley Railroad Company, the Boston and Maine Corporation, the Erie Lackawanna Railway Company, and the Reading Railroad.

the region. Lines that could not be operated profitably and were not considered essential to the rail transportation system would not be included in the Plan. The 3R Act's Plan created Conrail as a for-profit corporation to reorganize the bankrupt rail services in the region.

Section 304 of the 3R Act permitted the summary discontinuance of service over those lines not included in the Plan without Interstate Commerce Commission (ICC or Commission) approval if 60 days' notice was given and certain parties were notified. Beginning 120 days after such discontinuance, the summary abandonment of a line was allowed if 30 days' notice was given and the parties were notified. The 3R Act, in effect, authorized the discontinuance and abandonment of the lines not included in the Plan; ICC approval was not needed.[3] However, section 304(c)(2) of the 3R Act (codified at 45 U.S.C. 744(c)(2)(A)) stated that an abandonment or discontinuance could not be carried out if a shipper, or public authority, or any responsible person offered a rail service continuation subsidy.[4] The 4R Act amended the 3R Act by adding a new section 45 U.S.C. 744(d) which specified that a ''designated operator'' would be the rail carrier conducting operations when a subsidizer guaranteed payment.[5] Although not needing ICC authority to operate or abandon, the designated operators were common carriers.[6]

The use of the subsidy is limited to rail service and rail properties of a railroad in reorganization[7] in the region[8] that are not included in the Plan. 45 U.S.C. 744(a). Moreover, the subsidy must be made within 2 years of the effective date of the Plan[9] or within ''2 years after the date on which the final rail service continuation payment is received, whichever is later * * *.'' 45 U.S.C. 744(c)(1).

The 3R Act, as amended by the 4R Act, also created RSPO[10] which was authorized to issue standards for defining the subsidy-related terms ''revenue attributable to rail properties,'' ''avoidable costs of providing service,'' ''a reasonable return on the value,'' and ''reasonable management fee'' found in section 304. Section 205(d)(6).[11] Subsequently, the ICC issued regulations that are now codified at 49 CFR 1155. The regulations define the terms noted above (revenue attributable, avoidable costs, return on value, reasonable management fee) for determining the subsidy payment for the continuation of train service over lines not included in the Plan. The regulations are largely self-executing with little role provided for the ICC.[12]

The 4R Act also instituted the national OFA procedures. It allowed an abandonment to be postponed for up to 6 months if a financially responsible person offered to purchase or subsidize the line. Section 802. (This provision was originally codified at 49 U.S.C. 1a(6)(a) and subsequently recodified without substantive change at former 49 U.S.C. 10905.) In essence, the regional subsidy provision of 45 U.S.C. 744 was expanded to apply to all carriers. In November 1976, the ICC promulgated regulations that were predicated on the part 1155 regulations, although, due to factual and statutory differences, there were certain variations. The OFA rules are now found at 49 CFR 1152.27.[13]

The ICCTA was the latest legislative action applicable to these regulations. There was no change to 45 U.S.C. 744(c). The changes to section 744(d) do not affect part 1155. The RSPO statutes—49 U.S.C. 10361–64—were repealed. Former 49 U.S.C. 10905 was modified and is now found at 49 U.S.C. 10904, but the changes there do not affect our analysis.

In our NPR, we stated that we were reexamining part 1155 because of the changes made by the ICCTA, the availability of our national subsidy standards, and the likelihood that few situations fall within the regional subsidy framework. Comments were filed by the Association of American Railroads (AAR) and the Delaware Valley Railway Company, Inc. (DV).

Comments of the Parties

The AAR, in its brief comment, supports the removal of part 1155, arguing that rules ''are of marginal, if any, utility * * *.''

DV is a Class III short line railroad.[14] It has operated over a rail line owned by a subsidiary of the Reading Company, the corporate successor of the bankrupt Reading Railroad Company. DV expresses its belief that the regional standards ''substantially duplicate the National OFA standards,'' and supports removal of the part 1155 regional regulations because of the availability of the national OFA standards. It claims that, to keep separate regulations applicable to only a few lines and

[3] See *Common Carrier Status of States, State Agencies and Instrumentalities, and Political Subdivisions 49 CFR 1120A,* Finance Docket No. 28990F (ICC served July 16, 1981) at 9–10 (footnote omitted): ''A rail line which was approved for abandonment under the Final System Plan * * * but over which operations were continued by a [designated operator], comes within the meaning of abandoned or authorized for abandonment * * *.''

[4] This subsidy ''covers the difference between the revenue attributable to such rail properties and the avoidable costs of providing service on such properties plus a reasonable return on the value of such rail properties * * *.''

[5] The subsidy payment was now defined at section 744(d) as ''the difference between the revenue attributable to such properties and the avoidable costs of providing service on such rail properties, together with a *reasonable management fee* as determined by [RSPO].'' (Emphasis supplied.)

[6] See *Application Proc.-Construct, Acq. Or Oper. R. Lines,* 365 I.C.C. 516, 523 (1982) and *Exemption of Certain Designated Operators from Section 11343,* 361 I.C.C. 379 (1979), *aff'd in part and remanded in part sub nom. McGinness* v. *ICC,* 662 F.2d 853 (D.C. Cir. 1981). See also 49 CFR 1150.16: ''Although the designated operator will not be required to seek and obtain authority from the Board either to commence or terminate operations, the designated operator is a common carrier by railroad subject to all other provisions of 49 U.S.C. Subtitle IV.''

[7] A ''railroad in reorganization'' is defined at 45 U.S.C. 702(16) as a railroad which is subject to a bankruptcy proceeding and which has not been determined by a court to be reorganizable or not subject to reorganization pursuant to this chapter as prescribed in section 717(b) of this title. A 'bankruptcy proceeding' includes a proceeding pursuant to section 77 of the Bankruptcy Act and an equity receivership or equivalent proceeding * * *.''

[8] ''Region'' is defined at 45 U.S.C. 702(17) as ''the States of Maine, New Hampshire, Vermont, Massachusetts, Connecticut, Rhode Island, New York, New Jersey, Pennsylvania, Delaware, Maryland, Virginia, West Virginia, Ohio, Indiana, Michigan, and Illinois; the District of Columbia; and those portions of contiguous States in which are located rail properties owned or operated by railroads doing business in the aforementioned jurisdictions (as determined by [ICC] order) * * *.''

[9] The Plan was submitted to Congress on July 26, 1975. It was approved when neither the House of Representatives nor the Senate objected to it. The Plan was formally approved in section 601(e) of the 4R Act.

[10] RSPO was established as ''an office in the Interstate Commerce Commission.'' Former 49 U.S.C. 10361. In resolving the issue of whether final orders or regulations of RSPO were to be considered orders or regulations of the ICC, the court held that ''[a]lthough Congress gave to the RSPO final administrative responsibility for certain determinations, we conclude that the RSPO is sufficiently part of the ICC so that its orders are to be considered orders of the ICC for purposes of the Hobbs Act.'' *Southeastern Pennsylvania Transp. Auth.* v. *I.C.C.,* 644 F.2d 238, 240, n.3 (3d Cir. 1981).

[11] The language of section 205 pertaining to RSPO was eventually codified at 49 U.S.C. 10361–64.

[12] However, under 49 CFR 1155.3(a), a carrier giving notice of intent to discontinue service shall submit an ''Estimate of Subsidy Payment'' to, *inter alia,* RSPO. Under 49 CFR 1155.4(c), a party desiring an interpretation of the standards can file a petition with RSPO. Under § 1155.9, if the parties cannot agree on certain issues, the matter could be arbitrated. The ICC was not directly involved in reviewing disputes.

[13] The Staggers Rail Act of 1980, Public Law 96–448, 94 Stat. 1895, further revised former 49 U.S.C. 10905. Section 402. The 6-month negotiating period was shortened and, when a carrier and shipper could not agree to terms, the ICC upon request would set, and the carrier was bound by, the purchase or subsidy price.

[14] DV is involved in a pending proceeding in which relief is sought, *inter alia,* under 49 CFR part 1155. *RailAmerica, Inc., and the Delaware Valley Railway Company, Petition to Set Subsidy Terms Under 45 U.S.C. 744(c) and 49 CFR Part 1155,* STB Finance Docket No. 33285.

another standard for all other lines, would cause ''unnecessary, wasteful, potentially inconsistent, and duplicative regulation.'' It seeks to amend the national OFA standards to handle the few situations that would still fall under the regional standards.

In response to the question of whether there are any ''railroads in reorganization,'' DV claims that the Reading Company, while ''concededly not a railroad in reorganization under that [3R Act] statute, is a successor to a railroad in reorganization and should be subject to the provisions of 49 CFR part 1155 on that basis.'' [15] It argues that Congress did not intend that carriers could avoid regulatory oversight by reorganizing themselves, and that the Board should focus on the rail property and rail service at issue and not the status of the owning entity.[16]

Discussion and Conclusions

Because of the changes in the ICCTA and the fact that there appear to be few lines being operated under the regional subsidy regime, we will remove the more than 30 pages of regulations at part 1155. While technically there may no longer be any 3R Act railroads in reorganization, there appear to be a few lines that have been continuously subsidized under 49 U.S.C. 744, and these lines require special procedures. Therefore, we are issuing regulations at 49 CFR 1152.27(n) that would provide for summary abandonment and discontinuance on notice by the carrier owning the line, and that would allow for the opportunity to subsidize and purchase lines under the national OFA rules.

As noted, *supra*, these lines were effectively approved for abandonment and discontinuance under section 744, and, for those lines that have been continually subsidized, we do not believe that the approval to abandon or discontinue has been removed. Accordingly, Board authorization is not needed for cessation of service. Lines of railroad in the Northeast that were not included in the Plan and are no longer being subsidized under section 744 but continue to be operated are common carrier lines subject to the regular abandonment and national OFA regime of the Interstate Commerce Act.

The commenters generally support the removal of part 1155 (with DV also seeking a concomitant modification of the national OFA rules). Moreover, the record indicates that the regulations appear to be unnecessary. They were determined and issued by an office (RSPO) that has been abolished by the ICCTA.[17] Under former 49 U.S.C. 10362(b)(7), RSPO was to ''maintain, and from time to time revise and republish * * * standards for determining the revenue attributable to the rail properties, the avoidable costs of providing transportation, a reasonable return on value, and a reasonable management fee * * *.'' As noted, this section, as well as RSPO, has been abolished. There are, however, parallel sections in force—45 U.S.C. 744(c) and (d)—that pertain to subsidies for the continuation of rail freight service. Even here, however, support for the subsidy regulations is uncertain, because section 744(d)(1) and (d)(2) refer to laws repealed by the ICCTA.[18]

Even if the ICCTA does not mandate the removal of the regulations, there appears to be little need for the subsidy rules, because of the availability of the national standards and because the circumstances and conditions that the regional standards were to address have largely expired. Under 45 U.S.C. 744(a)(1) and (c)(1), the regional subsidy program applies to a ''rail service on rail properties of a railroad in reorganization'' and is not available ''after 2 years from the effective date of the [Plan] or more than two years after the last rail service continuation payment is received, whichever is later * * *.'' There may not be any railroads in reorganization as defined by the statute. In *Consolidated Rail Corp.* v. *Reading Co.*, 654 F. Supp. 1318, 1323 (Sp. Ct. RRRA 1987) (*Reading*), a case arose that involved whether personal injury claims could be brought against Conrail and National Railroad Passenger Corporation pursuant to section 709(b) of the 3R Act (45 U.S.C. 797h(b)). That section provided for assumption by Conrail of personal injury claims against ''a railroad in reorganization.'' The court looked at the definition of railroad in reorganization (45 U.S.C. 702(16)), *supra*, and stated that certain predecessor railroads of Conrail were not railroads in reorganization because they were no longer ''subject to a bankruptcy proceeding.'' These carriers had undergone reorganization, final consummation orders had been entered, and the carriers had been discharged in bankruptcy.[19] The court found that ''[w]here, as is the case here, the definition of a statutory term is clear and unequivocal it is controlling.'' *Id.* (citations omitted.)

As a consequence of *Reading*, there will, at a minimum, be no new lines that can be added to the regional subsidy regime. This does not, however, end our inquiry. There appears to be at least one line that has been subsidized since the enactment of the regional subsidy program. Such lines have already been approved for abandonment and discontinuance. Moreover, it can be argued that these lines still fall within the ambit of section 744. Under these circumstances, we believe that the best approach will be to eliminate part 1155, but modify the OFA regulations for situations involving lines that are still being subsidized under the regional standards.

The notice periods will follow the basic regime of section 744. Summary discontinuance of service without Board approval may be effected if 60 days' notice is given by the owner of the line and certain parties are notified.[20] Beginning 120 days thereafter, the summary abandonment of a line is allowed if 30 days' notice is given and the parties are notified.

We are requiring the owner of the line, and not the designated operator, to provide the notice that triggers the OFA process. We are retaining the provision by which a designated operator may terminate service in accordance with the terms of its agreement and is only required to give notice of termination of service to the shippers on the line. 49 CFR 1150.11. No time period is specified for the notice. We hope that

[15] DV claims it involves ''one of the few instances, if not the last instance, of rail service provided over railroad property owned by the successor to a bankrupt railroad not transferred to Conrail or another rail carrier under the [Plan].'' [Footnote omitted.]

[16] These concerns are moot, because we are finding that the abandonment and discontinuance of lines still being subsidized will fall under the special national OFA standards at 49 CFR 1152.27(n). Formerly subsidized lines that are being abandoned or discontinued will come under the regular OFA rules at section 1152.27.

[17] We note that the regulations assign continuing responsibilities to the abolished office (issuing interpretations, receiving estimates of subsidy payments).

[18] Under 45 U.S.C. 744(d)(1), the defunct RSPO is to determine the terms a subsidizer is to pay a designated operator. Section 744(d)(1) states that the terms ''revenue attributable,'' ''avoidable costs,'' and ''reasonable management fee'' are to be determined by ''the Office,'' defined at 45 U.S.C. 702(12) as RSPO.

Moreover, under 45 U.S.C. 744(d)(2), the term ''reasonable return on value'' is to be developed according to the standards of 205(d)(6) of the 3R Act, which, as noted, was codified at the now repealed RSPO statute, 49 U.S.C. 10362.

[19] The court noted (*Id.* at 1323, n.2) the following consummation dates: Erie Lackawanna, Inc. (November 30, 1982); Reading Co. (December 31, 1980); Penn Central Transportation Co. (October 24, 1978); Lehigh Valley Railroad Co. (September 1, 1982); and the Central of New Jersey (September 14, 1979). We note that despite this ruling, section 797h(b) has not been removed.

[20] Notice shall be to the Board, governor and transportation agencies and the government of each political subdivision of each state in which such rail properties are located and to each shipper who has used the rail service during the previous 12 months.

the designated operator and line owner will coordinate the giving of notice so that there will be no break in service. We recognize, however, that under our present ''designated operator'' rules, it is possible that the operator could terminate service before the notice period has expired. This eventuality is a natural outcome of such subsidy regimes where service is tied specifically to an agreement. Nevertheless, given the specified time periods and the ability of the Board to set terms and conditions under the national standards, we expect that any breaks in service would be of short duration.

The New OFA Rules

We are modifying 49 CFR 1152.27 by adding a new paragraph (n). Abandonment or discontinuance notice must be given, affording interested persons an opportunity to purchase or subsidize the line under our national OFA standards.[21] The applicable time limits will run from the date of the notice as the Board does not approve the cessation of service for these lines.

We will generally apply the national OFA standards applicable to class exemptions found at 49 CFR 1152.27 to these summary abandonments and discontinuances.[22] For example, a party may discontinue[23] or abandon service on a line of railroad formerly in reorganization that was not included in the Plan on 60 days' notice and, beginning 120 days after discontinuance, on 30 days' notice, respectively. Notice of summary abandonment or discontinuance will be published by the Board in the **Federal Register** within 20 days of filing. 49 CFR 1152.27(b)(2)(ii). Expressions of intent to file an offer must be filed no later than 10 days after the **Federal Register** publication. Paragraph (c)(2)(i) of section 1152.27. An offer must be filed within 30 days of the **Federal Register** publication. Paragraphs (b)(2)(ii) and (c)(2)(ii)(B) of section 1152.27.

The Board will review offers to determine if a financially responsible person has offered assistance. If this criterion is met, the Board will postpone the effective date of the summary abandonment (but not the discontinuance)[24] within 35 days of the **Federal Register** publication. Paragraph (e)(2) of § 1152.27. If the carrier and financially responsible person fail to agree on the amount or terms of subsidy or purchase, either party may request the Board to establish the conditions and amount of the compensation. This request must be filed within 30 days after the offer of purchase or subsidy is made, and the Board will issue a decision within 30 days after the request is due. Paragraphs (g)(1) and (h)(1) of § 1152.27.

Lines of the former railroads in reorganization under the 3R Act are under Board jurisdiction insofar as the institution of new rail service is involved. See *Delaware and Hudson Ry. Co.—Modified Cert. Of PC&N*, 363 I.C.C. 808 (1981) (holding that where a line had formally been operated under subsidy and was later abandoned, the carrier was required to file an application under former 49 U.S.C. 10901 to operate the line). Thus, in those instances, any future abandonment or discontinuance would be subject to the abandonment and OFA procedures of 49 U.S.C. 10903–04.

The Board concludes that the removal of the rule and the addition of the new rule will not have a significant effect on a substantial number of small entities. It appears that the eliminated, as well as the new, rule does not apply to many situations. In those situations where the rule changes are applicable, they are consistent with the new statutory framework. Moreover, there should not be any significant change from current practice under the new rules.

This action will not significantly affect either the quality of the human environment or the conservation of energy resources.

List of Subjects

49 CFR Part 1152

Administrative practice and procedure, Conservation, Environmental protection, National forests, National parks, National trails system, Public land-grants, Public lands-rights-of-way, Railroads, Recreation and recreation areas, Reporting and recordkeeping requirements.

49 CFR Part 1155

Railroads, Uniform System of Accounts.

Decided: May 13, 1998.

By the Board, Chairman Morgan and Vice Chairman Owen.

Vernon A. Williams,

Secretary.

For the reasons set forth in the preamble and under the authority of 49 U.S.C. 721(a), title 49, chapter X of the Code of Federal Regulations is amended as set forth below:

PART 1152—ABANDONMENT AND DISCONTINUANCE OF RAIL LINES AND RAIL TRANSPORTATION UNDER 49 U.S.C. 10903

1. The authority citation for part 1152 is revised to read as follows:

Authority: 11 U.S.C. 1170; 16 U.S.C. 1247(d) and 1248; 45 U.S.C. 744; and 49 U.S.C. 701 note (1995) (section 204 of the ICC Termination Act of 1995), 721(a), 10502, 10903–10905, and 11161.

2. In § 1152.27, paragraph (n) is added to read as follows:

§ 1152.27 Financial assistance procedures.

* * * * *

(n) *Special provisions for summary discontinuance and abandonment of lines not part of the Final System Plan.* (1) Board authorization is not needed for the cessation of service on a line of railroad formerly in reorganization that was not included in the Final System Plan (Plan) under the Regional Rail Reorganization Act of 1973, 45 U.S.C. 701 *et seq.*, as amended by the Railroad Revitalization and Regulatory Reform Act of 1976, if the line has been continuously subsidized since the inception of the Plan. To provide an opportunity for rail service continuation through offers of financial assistance, however, the owner of the line must give not less than 60 days' notice of a discontinuance, and beginning 120 days after discontinuance, not less than 30 days' notice of abandonment. Designated operators need only comply with the notice requirements of § 1150.11 of this title. In instances of discontinuance by a designated operator, the line owner is not obligated to operate the line. Notice is to be sent by the line owner to the Board, the governor and transportation agencies and the government of each political subdivision of each state in which such rail properties are located and to each shipper who has used the rail service

[21] Under the statute, the standards for subsidizing lines are the same for both the national OFA (49 U.S.C. 10904(f)(1)(C)) and regional subsidy (45 U.S.C. 744(c)(2)): the difference between the revenue attributable to the line and the avoidable costs of providing service plus a reasonable return on the value of the line. The regional standards also provide that designated operators are to receive a reasonable management fee discussed *infra.* Unlike section 744, however, the national OFA statute provides that the standard for purchasing a line is its fair market value. This standard will be used in processing offers under section 1152.27(n).

[22] The one significant difference is that we are incorporating into new section 1152.27(n)(2) the reasonable management fee standard for designated operators (4½ %) from section 1155.7(o).

[23] As noted, the owner of the lines gives the notice that triggers the OFA process for discontinuances. The designated operator follows the notice requirements of 49 CFR 1150.11.

[24] We cannot postpone the effective date of the discontinuance because, under our rules, designated operators need only comply with the notice requirements of 49 CFR 1150.11, and, in instances of discontinuance, the line owner is not obligated to operate the line.

during the previous 12 months. The Board will generally apply the OFA procedures in this section (49 CFR 1152.27) for class exemptions to summary abandonment and discontinuance notices (except that the Board will not postpone the effective date of a summary discontinuance). For example, notice of summary abandonment or discontinuance will be published by the Board in the **Federal Register** within 20 days of filing. Paragraph (b)(2)(ii) of this section. Expressions of intent to file an offer must be filed no later than 10 days after the **Federal Register** publication. Paragraph (c)(2)(i) of this section. An offer must be filed within 30 days of the **Federal Register** publication. Paragraphs (b)(2)(ii) and (c)(2)(ii)(B) of this section. The Board will review offers to determine if a financially responsible person has offered assistance. If this criterion is met, the Board will postpone the effective date of the summary abandonment (but not the discontinuance) within 35 days of the **Federal Register** publication. Paragraph (e)(2) of this section. If the carrier and financially responsible person fail to agree on the amount or terms of subsidy or purchase, either party may request the Board to establish the conditions and amount of the compensation. This request must be filed within 30 days after the offer of purchase or subsidy is made, and the Board will issue a decision within 30 days after the request is due. Paragraphs (g)(1) and (h)(1) of this section.

(2) Where a designated operator is being used, it shall be paid a reasonable management fee. If the parties cannot agree on this fee, it shall be four and one-half percent of the total annual revenues attributable to the branch.

PART 1155—[REMOVED]

3. Part 1155 is removed.

[FR Doc. 98–13592 Filed 5–21–98; 8:45 am]

BILLING CODE 4915–00–P

Proposed Rules

Federal Register
Vol. 63, No. 99
Friday, May 22, 1998

This section of the FEDERAL REGISTER contains notices to the public of the proposed issuance of rules and regulations. The purpose of these notices is to give interested persons an opportunity to participate in the rule making prior to the adoption of the final rules.

DEPARTMENT OF AGRICULTURE

Agricultural Marketing Service

7 CFR Part 1160

[DA–98–04]

Fluid Milk Promotion Order; Invitation to Submit Comments on Proposed Amendments to the Order

AGENCY: Agricultural Marketing Service, USDA.

ACTION: Proposed rule.

SUMMARY: This document invites written comments on a proposal to amend the Fluid Milk Promotion Order. The proposed amendments, requested by the National Fluid Milk Processor Promotion Board, which administers the Order, would modify the membership status and term of office of Board members. The proposed rule would also amend order language pertaining to committees and intellectual property rights (patents, copyrights, inventions, and publications). The Board believes that the proposed amendments are necessary to maintain Board membership continuity. The changes should allow the Board to operate in a more effective and efficient manner.

DATES: Comments are due no later than June 22, 1998.

ADDRESSES: Comments (two copies) should be filed with the USDA/AMS/Dairy Programs, Promotion and Research Branch, 1400 Independence Avenue, SW, Stop 0233, Room 2734 South Building, Washington, DC 20250–0233. Comments should reference the docket number and the date and page number of this issue of the **Federal Register** and will be made available for public inspection in Room 2734 South Building during regular business hours.

FOR FURTHER INFORMATION CONTACT: David R. Jamison, Chief, USDA/AMS/Dairy Programs, Promotion and Research Branch, 1400 Independence Avenue, SW, Stop 0233, Room 2734 South Building, Washington, DC 20250–0233, (202) 720–6909, David__Jamison@usda.gov.

SUPPLEMENTARY INFORMATION: The Regulatory Flexibility Act (5 U.S.C. 601–612) requires the Agency to examine the impact of a proposed rule on small entities. Small businesses in the fluid milk processing industry have been defined by the Small Business Administration as those employing less than 500 employees. There are approximately 250 fluid milk processors subject to the provisions of the Fluid Milk Promotion Order. Most of the parties subject to the Order are considered small entities.

Several changes are proposed to the Order provisions of the Fluid Milk Promotion Order (7 CFR Part 1160) concerning membership on the National Fluid Milk Processor Promotion Board (Board) and the terms of office for Board members. The Order is authorized under the Fluid Milk Promotion Act of 1990 (7 USC 6401–6417). The Board requested the amendments.

The Order provides for a 20-member board with 15 members representing geographic regions and five at-large members, at least three of whom are to be fluid milk processors and at least one member from the general public. To the extent practicable, members representing geographic regions should represent processing operations of differing sizes.

Currently, the Order provides that a fluid milk processor can be represented on the Board by not more than one member. The Board in its petition for rulemaking noted that it is more difficult to maintain the single member representation; that processors are larger in size and operate in several geographic areas; and that, to maintain continuity and provide a consistent pool of processor representatives, a change in the Order provisions is needed to allow more than one representative on the Board. The proposed amendments would allow a fluid milk processor to have two members on the Board.

Currently, except in those instances where a Board member changes fluid milk processor affiliation and is eligible to serve on the Board in another capacity during the same term, a Board member whose processor affiliation has changed cannot continue to serve on the Board. This proposed rule would allow Board members whose fluid milk processor company affiliation has changed to serve on the Board for a period of up to 60 days or until a successor is appointed, whichever is sooner, provided that the eligibility requirements of the Order are still met. This should help in the reduction of Board vacancies and foster continuity in Board activities and membership.

Another change that would contribute to greater continuity on the Board would allow Board members who fill vacancies with a term of 18 months or less to serve two consecutive full 3-year terms. Currently, the order provides that except for the initial staggered appointments, Board members could only serve two consecutive terms.

Another change would permit the Board to establish working committees of persons other than Board members to assist the Board with activities by providing information, knowledge, and expertise that otherwise might not be available.

Finally, the amendments would also modify the intellectual property provisions of the Order to specifically provide for and allow joint ownership of intellectual property, i.e., patents, copyrights, inventions, and publications, that is developed using joint funds.

These amendments to Order provisions should not add any burden to regulated parties because they relate to provisions concerning membership on the Board, the establishment of working committees, and joint ownership for patents, copyrights, inventions, and publications. The proposed changes would not impose additional reporting or collecting requirements. No relevant Federal rules have been identified that duplicate, overlap, or conflict with the rule.

Accordingly, pursuant to 5 U.S.C. 605(b), the Agricultural Marketing Service has certified that this rule would not have a significant economic impact on a substantial number of small entities.

Executive Order 12866 and the Paperwork Reduction Act

This proposed rule has been reviewed by the Office of Management and Budget and has been determined to be not significant for purposes of Executive Order 12866.

This proposed rule has been reviewed under Executive Order 12988, Civil Justice Reform. This rule is not intended to have retroactive effect. If adopted,

this proposed rule would not preempt any State or local laws, regulations, or policies, unless they present an irreconcilable conflict with this rule.

The Fluid Milk Promotion Act of 1990, as amended, authorizes the Fluid Milk Promotion Order. The Act provides that administrative proceedings must be exhausted before parties may file suit in court. Under section 1999K of the Act, any person subject to a Fluid Milk Promotion Order may file with the Secretary a petition stating that the Order, any provision of the Order, or any obligation imposed in connection with the Order is not in accordance with the law and request a modification of the Order or to be exempted from the Order. A person subject to an order is afforded the opportunity for a hearing on the petition. After a hearing, the Secretary would rule on the petition. The Act provides that the district court of the United States in any district in which the person is an inhabitant, or has his principal place of business, has jurisdiction to review the Secretary's ruling on the petition, provided a complaint is filed not later than 20 days after the date of the entry of the ruling.

In accordance with the Paperwork Reduction Act (44 U.S.C. Chapter 35), the forms and reporting and recordkeeping requirements that are included in the Fluid Milk Promotion Order have been approved previously by the Office of Management and Budget (OMB) and were assigned OMB No. 0581–0093, except for Board members' nominee background information sheets that were assigned OMB No. 0505–0001.

Statement of Consideration

The proposed rule would amend the membership and term-of-office provisions of the Fluid Milk Promotion Order. Currently, the Order provides that a fluid milk processor can be represented on the Board by not more than one member. The Board in its recommendation for rulemaking noted that it is more difficult to maintain the single member representation; that processors are larger in size and operate in several geographic areas; and that, to maintain continuity and provide a consistent pool of processor representatives, a change in the Order provisions is needed to allow more than one representative on the Board. The proposed amendments would allow a fluid milk processor to have two members on the Board.

The proposed amendments also would allow Board members whose fluid milk processor company affiliation has changed to serve on the Board for a period of up to 60 days or until a successor is appointed, whichever is sooner. Currently, except in those instances where a Board member changes fluid milk processor affiliation and is eligible to serve on the Board in another capacity during the same term, a Board member whose processor affiliation has changed cannot continue to serve on the Board. This proposed rule would allow Board members whose fluid milk processor company affiliation has changed to serve on the Board for a period of up to 60 days or until a successor is appointed, whichever is sooner, provided that the eligibility requirements of the Order are still met. This should help in the reduction of Board vacancies and foster continuity in Board activities and membership.

The proposed amendments would also allow Board members who fill vacancies with a term of 18 months or less to serve two additional 3-year terms. Currently, the Order states that, except for the initial staggered Board appointments of 1- or 2-year terms, Board members may only serve two consecutive terms. Thus any time served with the initial term is considered a complete term. The Board feels that this rule change would allow for greater continuity of membership.

This document also proposes to amend two additional sections of the Fluid Milk Promotion Order. The proposed amendments would permit the Board to establish working committees of persons other than Board members to assist the Board with activities by providing information, knowledge, and expertise that otherwise might not be available.

The proposed amendments also would modify the section on patents, copyrights, inventions, and publications by allowing jointly developed intellectual property to be jointly owned. Currently, the Order does not specifically provide for such joint ownership. This proposed amendment would allow the Board greater flexibility concerning intellectual property as it relates to ownership rights.

A thirty-day comment period is provided for interested persons to comment on this proposed rule. This period is appropriate so as to permit implementation of the changes, if adopted, as soon as possible.

List of Subjects in 7 CFR Part 1160

Fluid milk products, Milk, Promotion.

For the reasons set forth in the preamble, it is proposed that 7 CFR Part 1160 be amended as follows:

PART 1160—FLUID MILK PROMOTION PROGRAM

1. The authority citation for 7 CFR Part 1160 continues to read as follows:

Authority: 7 U.S.C. 6401–6417.

2. In § 1160.200, paragraph (a) is revised to read as follows:

§ 1160.200 Establishment and membership.

(a) There is hereby established a National Fluid Milk Processor Promotion Board of 20 members, 15 of whom shall represent geographic regions and five of whom shall be at-large members of the Board. To the extent practicable, members representing geographic regions shall represent fluid milk processing operations of differing sizes. No fluid milk processor shall be represented on the Board by more than two members. The at-large members shall include at least three fluid milk processors and at least one member from the general public. Except for the member or members from the general public, nominees appointed to the Board must be active owners or employees of a fluid milk processor. The failure of such a member to own or work for a fluid milk processor or its successor fluid milk processor shall disqualify that member for membership on the Board except that such member shall continue to serve on the Board for a period of up to 60 days following the disqualification or until the appointment of a successor Board member to such position, whichever is sooner, provided that such person continues to meet the criteria for serving on the Board as a processor representative.

* * * * *

3. In § 1160.201, paragraph (b) is revised to read as follows:

§ 1160.201 Term of office.

* * * * *

(b) No member shall serve more than two consecutive terms, except that any member who is appointed to serve for an initial term of one or two years shall be eligible to be reappointed for two three-year terms. Appointment to another position on the Board is considered a consecutive term. Should a non-board member be appointed to fill a vacancy on the Board with a term of 18 months or less remaining, the appointee shall be entitled to serve two consecutive 3-year terms following the term of the vacant position to which the person was appointed.

4. In § 1160.208, paragraph (g) is revised to read as follows:

§ 1160.208 Powers of the Board.

* * * * *

(g) To select committees and subcommittees, to adopt bylaws, and to adopt such rules for the conduct of its business as it may deem advisable; and the Board may establish working committees of persons other than Board members;

* * * * *

5. In § 1160.505, the text is designated paragraph (a) and a new paragraph (b) is added to read as follows:

§ 1160.505 Patents, copyrights, inventions and publications.

* * * * *

(b) Should patents, copyrights, inventions, and publications be developed through the use of funds collected by the Board under this subpart, and funds contributed by another organization or person, ownership and related rights to such patents, copyrights, inventions, and publications shall be determined by the agreement between the Board and the party contributing funds towards the development of such patent, copyright, invention, and publication in a manner consistent with paragraph (a) of this section.

Dated: May 18, 1998.

Enrique E. Figueroa,

Administrator, Agricultural Marketing Service.

[FR Doc. 98–13772 Filed 5–21–98; 8:45 am]

BILLING CODE 3410–02–P

DEPARTMENT OF AGRICULTURE

7 CFR Parts 3015, 3016 and 3019

RIN 0503–AA16

Uniform Administrative Requirements for Grants and Cooperative Agreements to State and Local Governments and Uniform Administrative Requirements for Grants and Agreements with Institutions of Higher Education, Hospitals, and Other Non-Profit Organizations

AGENCY: Department of Agriculture, USDA.

ACTION: Notice of proposed rulemaking; extension of comment period.

SUMMARY: On February 17, 1998, USDA published in the **Federal Register** (63 FR 7734) a Notice of Proposed Rulemaking (NPRM) in which USDA proposed to revise its grants management regulations in order to bring the entitlement programs it administers under the same regulations that already apply to nonentitlement programs and identify exceptions to these general rules that apply only to entitlement programs. This document extends the comment period for that NPRM in order to give interested parties ample time to comment.

DATES: The period for written comments is extended from May 19, 1998 to June 18, 1998.

ADDRESSES: Comments must be mailed or faxed to Gerald Miske, Supervisory Management Analyst, Fiscal Policy Division, Office of the Chief Financial Officer, USDA, Room 3022 South Building, 1400 Independence Avenue, SW, Washington, D.C. 20250; FAX (202) 690–1529. Written comments may be inspected at the above address from 8:00 a.m. to 5:00 p.m. A copy of the Regulatory Cost/Benefit Assessment referenced in the Regulatory Impact Analysis section of this preamble can be obtained from Gerald Miske, Supervisory Management Analyst, Fiscal Policy Division, Office of the Chief Financial Officer, USDA, Room 3022 South Building, 1400 Independence Avenue, SW, Washington, D.C. 20250. This assessment may be examined at the same address.

FOR FURTHER INFORMATION CONTACT: Gerald Miske, Supervisory Management Analyst, Fiscal Policy Division, Office of the Chief Financial Officer, USDA, at the above address; telephone (202) 720–1553.

Dated: May 19, 1998.

Sally Thompson,

Chief Financial Officer.

[FR Doc. 98–13773 Filed 5–21–98; 8:45 am]

BILLING CODE 3410–90–P

DEPARTMENT OF TRANSPORTATION

Federal Aviation Administration

14 CFR Part 39

[Docket No. 96–CE–09–AD]

RIN 2120–AA64

Airworthiness Directives; The New Piper Aircraft, Inc. PA–24, PA–28R, PA–30, PA–32R, PA–34, and PA–39 Series Airplanes

AGENCY: Federal Aviation Administration, DOT.

ACTION: Notice of proposed rulemaking (NPRM).

SUMMARY: This document proposes to revise Airworthiness Directive (AD) 97–01–01, which currently requires repetitively inspecting the main gear sidebrace studs for cracks on The New Piper Aircraft, Inc. (Piper) Models PA–24, PA–28R, PA–30, PA–32R, PA-34, and PA–39 series airplanes, and replacing any main gear sidebrace stud found cracked. The Federal Aviation Administration (FAA) has approved certain alternative methods of compliance (AMOC) for AD 97–01-01, and has determined that these AMOC's should be incorporated into the AD. The proposed AD would retain all the actions of AD 97–01–01, and would incorporate certain AMOC's as a way of accomplishing the actions specified in AD 97–01–01. The actions specified by the proposed AD are intended to prevent a main landing gear collapse caused by main gear sidebrace stud cracks, which could result in loss of control of the airplane during landing operations.

DATES: Comments must be received on or before July 23, 1998.

ADDRESSES: Submit comments in triplicate to the Federal Aviation Administration (FAA), Central Region, Office of the Regional Counsel, Attention: Rules Docket No. 96-CE–09-AD, Room 1558, 601 E. 12th Street, Kansas City, Missouri 64106. Comments may be inspected at this location between 8 a.m. and 4 p.m., Monday through Friday, holidays excepted.

Information that applies to the proposed AD may be examined at the Rules Docket at the address above.

FOR FURTHER INFORMATION CONTACT: Mr. William O. Herderich, Aerospace Engineer, FAA, Atlanta Certification Office, One Crown Center, 1895 Phoenix Boulevard, suite 450, Atlanta, Georgia 30349; telephone: (770) 703–6084; facsimile: (770) 703–6097.

SUPPLEMENTARY INFORMATION:

Comments Invited

Interested persons are invited to participate in the making of the proposed rule by submitting such written data, views, or arguments as they may desire. Communications should identify the Rules Docket number and be submitted in triplicate to the address specified above. All communications received on or before the closing date for comments, specified above, will be considered before taking action on the proposed rule. The proposals contained in this notice may be changed in light of the comments received.

Comments are specifically invited on the overall regulatory, economic, environmental, and energy aspects of the proposed rule. All comments submitted will be available, both before and after the closing date for comments, in the Rules Docket for examination by

interested persons. A report that summarizes each FAA-public contact concerned with the substance of this proposal will be filed in the Rules Docket.

Commenters wishing the FAA to acknowledge receipt of their comments submitted in response to this notice must submit a self-addressed, stamped postcard on which the following statement is made: ''Comments to Docket No. 96-CE–09-AD.'' The postcard will be date stamped and returned to the commenter.

Availability of NPRMs

Any person may obtain a copy of this NPRM by submitting a request to the FAA, Central Region, Office of the Regional Counsel, Attention: Rules Docket No. 96-CE–09-AD, Room 1558, 601 E. 12th Street, Kansas City, Missouri 64106.

Discussion

AD 97–01–01, Amendment 39–9872 (62 FR 10, January 2, 1997), currently requires repetitively inspecting the main gear sidebrace studs for cracks on Piper Models PA–24, PA–28R, PA–30, PA–32R, PA–34, and PA–39 series airplanes, and replacing any main gear sidebrace stud found cracked. The actions specified by AD 97–01-01 are intended to prevent a main landing gear collapse caused by main gear sidebrace stud cracks, which could result in loss of control of the airplane during landing operations.

Actions Since Issuance of Previous Rule

Since issuance of AD 97–01–01, the FAA has approved alternative methods of compliance for modifying the existing bracket assembly as terminating action for the repetitive inspection requirement of that AD.

The FAA's Determination

After examining the circumstances and reviewing all available information related to the subject described above, the FAA has determined that (1) the alternative methods of compliance approved for modifying the existing bracket assembly should be made available as an option of complying with the current AD; and (2) AD action should be taken to prevent a main landing gear collapse caused by main gear sidebrace stud cracks, which could result in loss of control of the airplane during landing operations.

Explanation of the Provisions of the Proposed AD

Since an unsafe condition has been identified that is likely to exist or develop in other Piper Models PA-24, PA–28R, PA–30, PA–32R, PA–34, and PA–39 series airplanes of the same type design, the FAA is proposing to revise AD 97–01–01. The proposed AD would retain all the actions of AD 97–01–01, and would incorporate alternative methods of compliance for modifying the existing bracket assembly, as terminating action for the repetitive inspection requirement of that AD.

Cost Impact

The cost impact of the proposed AD would be the same as is currently required by AD 97–01–01. As a courtesy, the FAA is reprinting that cost information in the following paragraphs.

The FAA estimates that 13,200 airplanes in the U.S. registry would be affected by the proposed AD, that it would take approximately 5 workhours per airplane to accomplish the proposed action, and that the average labor rate is approximately $60 an hour. Based on these figures, the total cost impact of the proposed inspection on U.S. operators is estimated to be $3,960,000. This figure represents the total cost of the proposed initial inspection, and does not reflect costs for any of the proposed repetitive inspections or possible replacements. The FAA has no way of determining how many main gear side brace studs may need replacement or how many repetitive inspections each owner/operator may incur over the life of the airplane.

In addition, the proposed AD would require the same inspections required by AD 95–20–07 (which was superseded by AD 97–01–01). The only difference between the proposed AD and AD 95–20–07 is the addition of an inspection-terminating modification option and the elimination of (from the ''Applicability'' section of the AD) certain airplanes that incorporate a certain main side brace stud assembly. The proposed AD would also not provide any additional cost impacts over that already required by AD 95–20–07.

Regulatory Impact

The regulations proposed herein would not have substantial direct effects on the States, on the relationship between the national government and the States, or on the distribution of power and responsibilities among the various levels of government. Therefore, in accordance with Executive Order 12612, it is determined that this proposal would not have sufficient federalism implications to warrant the preparation of a Federalism Assessment.

For the reasons discussed above, I certify that this action (1) is not a ''significant regulatory action'' under Executive Order 12866; (2) is not a ''significant rule'' under DOT Regulatory Policies and Procedures (44 FR 11034, February 26, 1979); and (3) if promulgated, will not have a significant economic impact, positive or negative, on a substantial number of small entities under the criteria of the Regulatory Flexibility Act. A copy of the draft regulatory evaluation prepared for this action has been placed in the Rules Docket. A copy of it may be obtained by contacting the Rules Docket at the location provided under the caption **ADDRESSES**.

List of Subjects in 14 CFR Part 39

Air transportation, Aircraft, Aviation safety, Safety.

The Proposed Amendment

Accordingly, pursuant to the authority delegated to me by the Administrator, the Federal Aviation Administration proposes to amend part 39 of the Federal Aviation Regulations (14 CFR part 39) as follows:

PART 39—AIRWORTHINESS DIRECTIVES

1. The authority citation for part 39 continues to read as follows:

Authority: 49 U.S.C. 106(g), 40113, 44701.

§ 39.13 [Amended]

2. Section 39.13, is amended by removing Airworthiness Directive 97–01–01, Amendment 39–9872 (62 FR 10, January 2, 1997), and by adding a new AD to read as follows:

The New Piper Aircraft, Inc.: Docket No. 96-CE–09-AD; Revises AD 97–01–01, Amendment 39–9872.

Applicability: The following airplane models and serial numbers, certificated in any category:

1. All serial numbers of Models PA–24, PA–24–250, PA–24–260, PA–24–400, PA–30, and PA–39 airplanes;

2. The following model and serial number airplanes that are not equipped with a Piper part number (P/N) 78717–02 (or FAA-approved equivalent part number) main gear sidebrace stud in both right and left main gear sidebrace bracket assemblies:

Model	Serial Nos.
PA–28R–180	28R–30002 through 28R–31135, and 28R–7130001 through 28R–7130013.
PA–28R–200	28R–35001 through 28R–35820, and 28R–7135001 through 28R–7635539.
PA–28R–201	28R–7737002 through 28R–7737096.
PA–28R–201T ..	28R–7703001 through 28R–7703239.
PA–32R–300	32R–7680001 through 32R–7780444.

Model	Serial Nos.
PA–34–200	All serial numbers.
PA–34–200T	34–7570001 through 34–7770372.

Note 1: P/N 78717–02 sidebrace stud was installed at manufacture on Piper Model PA–34–200T airplanes, serial numbers 34–7670325 through 34–7770372.

Note 2: This AD applies to each airplane identified in the preceding applicability provision, regardless of whether it has been modified, altered, or repaired in the area subject to the requirements of this AD. For airplanes that have been modified, altered, or repaired so that the performance of the requirements of this AD is affected, the owner/operator must request approval for an alternative method of compliance in accordance with paragraph (e) of this AD. The request should include an assessment of the effect of the modification, alteration, or repair on the unsafe condition addressed by this AD; and, if the unsafe condition has not been eliminated, the request should include specific proposed actions to address it.

Compliance: Required initially as follows, and thereafter as specified in the body of this AD:

1. For the affected Models PA–28R–180, PA–28R–200, PA–28R–201, PA–28R–201T, PA–32R–300, PA–34–200, and PA–34–200T airplanes: Within the next 100 hours time-in-service (TIS) after the effective date of this AD; or, if the main gear sidebrace stud has already been inspected or replaced as specified in this AD, within 500 hours TIS after the last inspection or replacement; whichever occurs later.

2. For the affected Models PA–24, PA–24–250, PA–24–260, PA–24–400, PA–30, and PA–39 airplanes: Within the next 100 hours TIS after the effective date of this AD; or, if the main gear sidebrace stud has already been inspected or replaced as specified in this AD, within 1,000 hours TIS after the last inspection or replacement; whichever occurs later.

To prevent main landing gear (MLG) collapse caused by main gear sidebrace stud cracks, which could result in loss of control of the airplane during landing operations, accomplish the following:

Note 3: The paragraph structure of this AD is as follows:

Level 1: (a), (b), (c), etc.
Level 2: (1), (2), (3), etc.
Level 3: (i), (ii), (iii), etc.
Level 4: (A), (B), (C), etc.

Level 2, Level 3, and Level 4 structures are designations of the Level 1 paragraph they immediately follow.

(a) Remove both the left and right main gear sidebrace studs from the airplane in accordance with the instructions contained in the Landing Gear section of the maintenance manual, and inspect each main gear sidebrace stud for cracks, using Type I (fluorescent) liquid penetrant or magnetic particle inspection methods. Figure 1 of this AD depicts the area of the sidebrace stud shank where the sidebrace stud is to be inspected.

Note 4: All affected Models PA–24 and PA–24–250 airplanes were equipped at manufacture with P/N 20829–00 main gear sidebrace studs. All affected Models PA–24–260, PA–24–400, PA–30, and PA–39 airplanes were equipped at manufacture with P/N 22512–00 main gear sidebrace studs. The Appendix included with this AD contains information on determining the P/N of the bracket assembly (which contains the main gear side brace stud) on the affected PA–28R, PA–32R, and PA–34 series airplanes.

BILLING CODE 4910–13–U

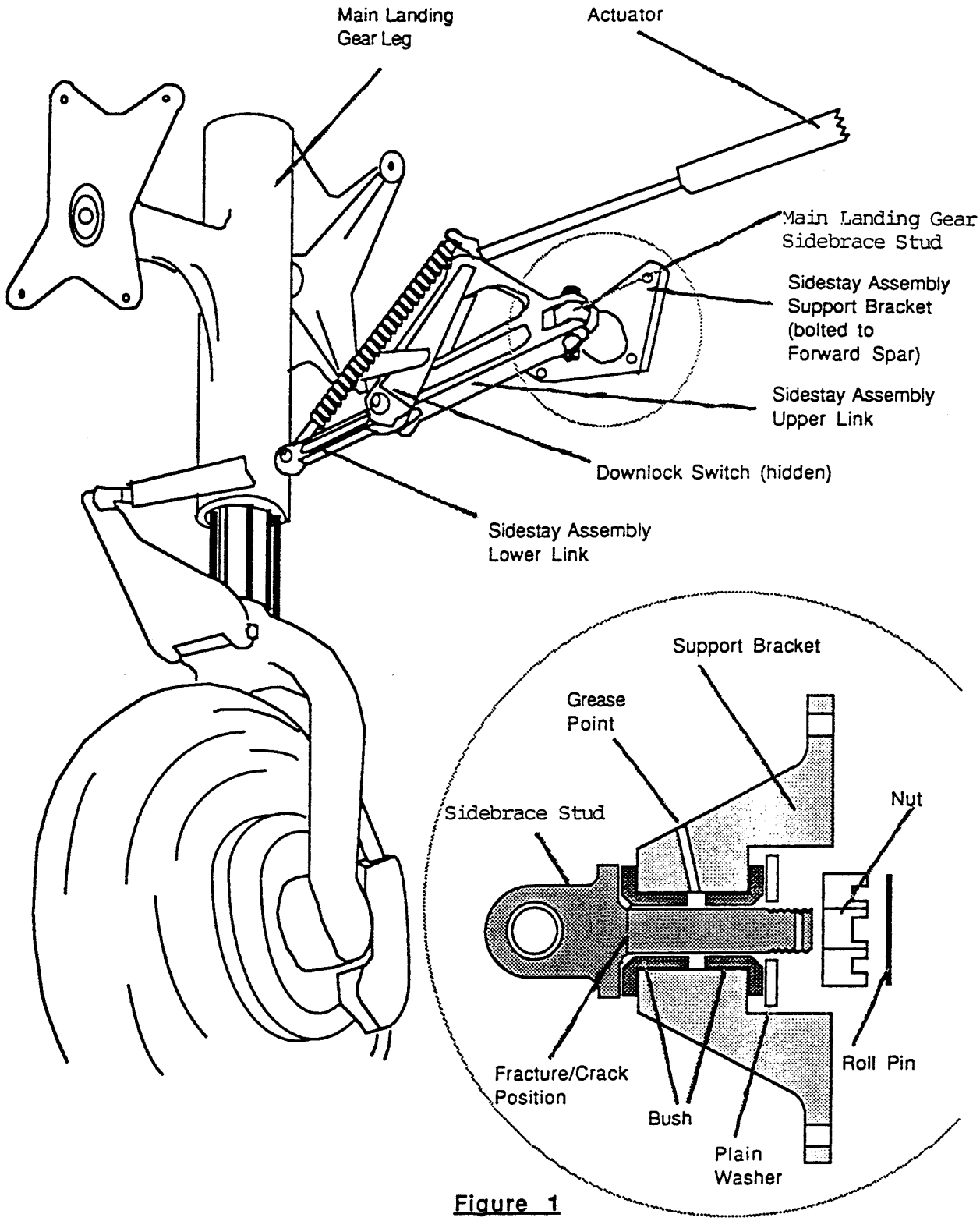

Figure 1

Note: This figure is provided to depict the area of the sidebrace stud to be inspected. This is not intended to represent the configuration of all models affected.

BILLING CODE 4910–13–C

(1) For any main gear sidebrace stud found cracked, prior to further flight, replace the cracked stud with an FAA-approved serviceable part (part numbers referenced in the table in paragraph (b) of this AD or FAA-approved equivalent part number) in accordance with the instructions contained in the Landing Gear section of the applicable maintenance manual, and accomplish one of the following, as applicable:

(i) Reinspect (and replace as necessary) as specified in paragraph (b) of this AD; or

(ii) For the affected Models PA–28R–180, PA–28R–200, PA–28R–201, PA–28R–201T, PA–32R–300, PA–34–200, and PA–34–200T airplanes, the 9/16-inch main gear sidebrace studs (P/N 95299–00, 95299–02, or P/N 67543, as applicable) are no longer manufactured. Install a new main gear sidebrace stud bracket assembly, P/N 95643–06, P/N 95643–07, P/N 95643–08, or P/N 95643–09, as applicable. No repetitive inspections will be required by this AD for these affected airplane models when this bracket assembly is installed; or

(iii) For the affected Models PA–28R–180, PA–28R–200, PA–28R–201, PA–28R–201T, PA–32R–300, PA–34–200, and PA–34–200T airplanes, ream the existing two-piece bushings to an inside diameter of .624-inch to .625-inch, chamfer the head side of the bushing to accommodate the radius in the shank of the main gear sidebrace stud, and install the ⅝-inch stud, P/N 78717–02. No repetitive inspections will be required by this AD when this action is accomplished. If the bushings cannot be reamed while installed in the bracket (i.e., the bushings are loose), then install a main gear sidebrace bracket assembly, P/N 95643–06, P/N 95643–07, P/N 95643–08, or P/N 95643–09, as applicable. Models PA–28R–180 and PA–28R–200 with serial numbers as specified in the Appendix to this AD may be equipped with a bracket casting identified with casting number 67073–2 or 67073–3 and may require the following modification to P/N 78717–02 for proper installation:

(A) Reduce the length of the stud to 1.688 ± 0.15 inches;

(B) Add additional rolled threads to 1.125 ± .015 inches from the flange. Note that the stud is heat treated to 180 to 200 ksi; and

(C) Drill an additional roll pin hole 90 degrees to the existing hole, and approximately 1.480 inches from the flange.

(iv) No repetitive inspections will be required by this AD when a P/N 78717–02 (or FAA-approved equivalent part number) main gear sidebrace stud is installed in the existing bracket assembly or when a bracket assembly, P/N 95643–07 (or FAA-approved equivalent part number), P/N 95643–08 (or FAA-approved equivalent part number), or P/N95643–09 (or FAA-approved equivalent part number), as applicable, is installed.

(2) For any main gear sidebrace stud not found cracked, prior to further flight, reinstall the uncracked stud in accordance with the instructions contained in the Landing Gear section of the applicable maintenance manual, and reinspect and replace (as necessary) as specified in paragraph (b) of this AD.

(b) Reinspect both the left and right main gear sidebrace studs, using Type I (fluorescent) liquid penetrant or magnetic particle inspection methods. Replace any cracked stud or reinstall any uncracked stud as specified in paragraphs (a)(1) and (a)(2) of this AD, respectively:

Part number installed	TIS inspection interval (hours)	Model airplanes installed on
20829–00 (Piper parts) or FAA-approved equivalent part number.	1,000	PA–24 and PA–24–250.
22512–00 (Piper parts) or FAA-approved equivalent part number.	1,000	PA–24–260, PA–24–400, PA–30, and PA–39.
95299–00 or 95299–02 (Piper parts) or FAA-approved equivalent part number.	500	PA–28R–180 and PA–28R–200 not equipped with casting number 67073–2 or 67073–3, PA–28R–201, PA–28R–201T, PA–32R–300, PA–34–200, and PA–34–200T.
67543 (Piper parts) or FAA-approved equivalent part number	500	PA–28R–180 and PA–28R–200 equipped with casting number 67073–02 or 67073–03.

Note 5: Accomplishing the actions of this AD does not affect the requirements of AD 77–13–21, Amendment 39–3093. The tolerance inspection requirements of that AD still apply for Piper PA–24, PA–30, and PA–39 series airplanes.

(c) Owners/operators of the affected Models PA–28R–180, PA–28R–200, PA–28R–201, PA–28R–201T, PA–32R–300, PA–34–200, and PA–34–200T airplanes may accomplish one of the following at any time to terminate the repetitive inspection requirement of this AD:

(1) Install a main gear sidebrace bracket assembly, P/N 95643–06 (or FAA-approved equivalent part number), P/N 95643–07 (or FAA-approved equivalent part number), P/N 95643–08 (or FAA-approved equivalent part number), or P/N 95643–09 (or FAA-approved equivalent part number), as applicable, which contains the 5/8-inch diameter main gear sidebrace stud, P/N 78717–02 (or FAA-approved equivalent part number), and the one-piece bushing, P/N 67026–12 (or FAA-approved equivalent part number). Accomplish these installations in accordance with the instructions contained in the Landing Gear section of the applicable maintenance manual; or

(2) Ream the existing two-piece bushings to an inside diameter of .624-inch to .625-inch, chamfer the head side of the bushing to accommodate the radius in the shank of the main gear sidebrace stud, and install the 5/8-inch stud, P/N 78717–02 (or FAA-approved equivalent part number). No repetitive inspections will be required by this AD when this action is accomplished. If the bushings cannot be reamed while installed in the bracket (i.e., the bushings are loose), then install a main gear sidebrace bracket assembly, P/N 95643–06 (or FAA-approved equivalent part number), P/N 95643–07 (or FAA-approved equivalent part number), P/N 95643–08 (or FAA-approved equivalent part number), or P/N 95643–09 (or FAA-approved equivalent part number), as applicable. Models PA–28R–180 and PA–28R–200 with serial numbers as specified in the Appendix to this AD may be equipped with a bracket casting identified with casting number 67073–2 or 67073–3 and may require the following modification to P/N 78717–02 (or FAA-approved equivalent part number) for proper installation:

(i) Reduce the length of the stud to 1.688 ± 0.15 inches;

(ii) Add additional rolled threads to 1.125 ± .015 inches from the flange. Note that the stud is heat treated to 180 to 200 ksi; and

(iii) Drill an additional roll pin hole 90 degrees to the existing hole, and approximately 1.480 inches from the flange.

(d) Special flight permits may be issued in accordance with sections 21.197 and 21.199 of the Federal Aviation Regulations (14 CFR 21.197 and 21.199) to operate the airplane to a location where the requirements of this AD can be accomplished.

(e) An alternative method of compliance or adjustment of the initial or repetitive compliance times that provides an equivalent level of safety may be approved by the Manager, Atlanta Aircraft Certification Office (ACO), One Crown Center, 1895 Phoenix Boulevard, suite 450, Atlanta, Georgia 30349.

(1) The request shall be forwarded through an appropriate FAA Maintenance Inspector, who may add comments and then send it to the Manager, Atlanta ACO.

(2) Alternative methods of compliance approved in accordance with AD 97–01–01, Amendment 39–9872 (revised by this action), or AD 95–20–07, Amendment 39–9386 (superseded by AD 97–01–01), are considered approved as alternative methods of compliance with this AD.

Note 6: Information concerning the existence of approved alternative methods of compliance with this AD, if any, may be obtained from the Atlanta ACO.

(f) Information related to this AD may be inspected at the FAA, Central Region, Office of the Regional Counsel, Room 1558, 601 E. 12th Street, Kansas City, Missouri.

(g) This amendment revises AD 97–01–01, Amendment 39–9872, which superseded AD 95–20–07, Amendment 39–9386.

Appendix to Docket No. 96–CE–09–AD Information to Determine Main Gear Sidebrace Stud Assembly Part Number (P/N)

—The P/N 95643–00/-01/-02/-03 bracket assembly contains the 9/16-inch diameter main gear sidebrace stud, P/N 95299–00/-02, and a two-piece bushing, P/N 67026–6.

—The P/N 95643–06/-07/-08/-09 bracket assembly contains the 5/8-inch diameter main gear sidebrace stud, P/N 78717–02, and a one-piece bushing, P/N 67026-12.

—Both the one-piece and the two-piece bushing have a visible portion of the bushing flange, i.e., bushing shoulder.

—Whether a one-piece or two-piece bushing is installed may be determined by measuring the outside diameter of the bushing flange with a micrometer (jaws of the caliper must be 3/32-inch or less). The two-piece bushing will have an outside diameter of 1.00 inch and the one-piece bushing will have an outside diameter of 1.128 to 1.130 inches. This measurement is not valid for the following airplanes:

Model	Serial Nos.
PA–28R–180	28R–30004 through 28–31270.
PA–28R–200	28R–35001 through 28R–35820, and 28R–7135001 through 28R–7135062.

The main gear sidebrace studs on these airplanes will require removal to determine the P/N installed.

—The one-piece bushing contains a visible chamfer in the center of the bushing, and the chamfer in the two-piece bushing is not visible when the stud is installed.

—If P/N 95643–00/-01/-02/-03 bracket assembly is installed or the above information cannot be utilized, the main gear sidebrace stud will need to be removed from the bracket to determine the shank diameter and main gear sidebrace stud P/N.

—P/N 95299–00 and P/N 95299–02 main gear sidebrace studs are 9/16-inch in diameter.

—P/N 78717–00 main gear sidebrace studs are 5/8-inch in diameter.

—P/N 95643–00/-01/-02/-03 bracket assembly may have been modified to accommodate the 5/8-inch diameter main gear sidebrace stud, P/N 78717–02.

—The embossed number of 95363 on the bracket forging is not the bracket assembly P/N.

—The bracket assemblies identified with casting number 67073–2 or 67073–3 contain a 9/16-inch diameter main gear sidebrace stud, P/N 67543, and two-piece bushing, P/N 67026–2 and 67026–3.

—Model PA–28R–180 airplanes, serial numbers 28R-30004 through 28R–31270; and Model PA–28R–200 airplanes, serial numbers 28R–35001 through 28R–35820 and 28R–7135001 through 28R–7135062, are equipped from the factory with bracket assemblies identified with casting number 67073–2 and 67073–3.

—P/N 67543 main gear sidebrace studs are 9/16-inch in diameter.

Issued in Kansas City, Missouri, on May 14, 1998.

Michael Gallagher,

Small Airplane Directorate, Aircraft Certification Service.

[FR Doc. 98–13656 Filed 5–21–98; 8:45 am]

BILLING CODE 4910–13–U

DEPARTMENT OF TRANSPORTATION

Federal Aviation Administration

14 CFR Part 39

[Docket No. 95–CE–72–AD]

RIN 2120–AA64

Airworthiness Directives; SOCATA—Groupe AEROSPATIALE Models TB9 and TB10 Airplanes

AGENCY: Federal Aviation Administration, DOT.

ACTION: Notice of proposed rulemaking (NPRM).

SUMMARY: This document proposes to adopt a new airworthiness directive (AD) that would apply to certain SOCATA—Groupe AEROSPATIALE (Socata) Models TB9 and TB10 airplanes. The proposed AD would require repetitively inspecting the wing front attachments on the wing and fuselage sides for cracks, and repetitively incorporating a certain modification kit (type of kit and time of incorporation depends on whether cracks are found during the inspection). The proposed AD is the result of mandatory continuing airworthiness information (MCAI) issued by the airworthiness authority for France. The actions specified by the proposed AD are intended to prevent structural failure of the wing front attachments caused by fatigue cracking, which could result in the wing separating from the airplane if the airplane is operated with cracked wing front attachments over an extended period of time.

DATES: Comments must be received on or before June 25, 1998.

ADDRESSES: Submit comments in triplicate to the Federal Aviation Administration (FAA), Central Region, Office of the Regional Counsel, Attention: Rules Docket No. 95–CE–72–AD, Room 1558, 601 E. 12th Street, Kansas City, Missouri 64106. Comments may be inspected at this location between 8 a.m. and 4 p.m., Monday through Friday, holidays excepted.

Service information that applies to the proposed AD may be obtained from the SOCATA—Groupe AEROSPATIALE, Socata Product Support, Aeroport Tarbes-Ossun-Lourdes, B P 930, 65009 Tarbes Cedex, France; telephone: 33–5–62–41–76–52; facsimile: 33–5–62–41–76–54; or the Product Support Manager, SOCATA Aircraft, North Perry Airport, 7501 Pembroke Road, Pembroke Pines, Florida 33023; telephone: (954) 893–1400; facsimile: (954) 964–1402. This information also may be examined at the Rules Docket at the address above.

FOR FURTHER INFORMATION CONTACT: Mr. Karl Schletzbaum, Aerospace Engineer, FAA, Small Airplane Directorate, 1201 Walnut Street, suite 900, Kansas City, Missouri 64106; telephone: (816) 426–6934; facsimile: (816) 426–2169.

SUPPLEMENTARY INFORMATION:

Comments Invited

Interested persons are invited to participate in the making of the proposed rule by submitting such written data, views, or arguments as they may desire. Communications should identify the Rules Docket number and be submitted in triplicate to the address specified above. All communications received on or before the closing date for comments, specified above, will be considered before taking action on the proposed rule. The proposals contained in this notice may be changed in light of the comments received.

Comments are specifically invited on the overall regulatory, economic, environmental, and energy aspects of the proposed rule. All comments submitted will be available, both before and after the closing date for comments, in the Rules Docket for examination by interested persons. A report that summarizes each FAA-public contact concerned with the substance of this proposal will be filed in the Rules Docket.

Commenters wishing the FAA to acknowledge receipt of their comments submitted in response to this notice must submit a self-addressed, stamped postcard on which the following statement is made: ''Comments to Docket No. 95–CE–72–AD.'' The postcard will be date stamped and returned to the commenter.

Availability of NPRMs

Any person may obtain a copy of this NPRM by submitting a request to the FAA, Central Region, Office of the Regional Counsel, Attention: Rules Docket No. 95–CE–72–AD, Room 1558, 601 E. 12th Street, Kansas City, Missouri 64106.

Discussion

The Direction Générale de l'Aviation Civile (DGAC), which is the airworthiness authority for France, recently notified the FAA that an unsafe condition may exist on all Socata Model TB9 airplanes and certain Socata Model TB10 airplanes. The DGAC reports 15 cases of cracks found on the wing front attachments of the referenced airplanes.

This condition, if not detected and corrected in a timely manner, could result in structural failure of the wing attachment and the wing separating from the airplane if the airplane is operated with cracked wing front attachments over an extended period of time.

Relevant Service Information

Socata has issued Service Bulletin No. SB 10–081–57, Amendment 1, dated August 1996, which specifies procedures for inspecting the wing front attachments on the wing and fuselage sides for cracks. Also included in this service bulletin is reference to certain wing front attachment kits that should be incorporated on the Socata Models TB9 and TB10, depending on the inspection results. The procedures for incorporating the modification kits are in the Technical Instructions for Modification included with each kit.

The DGAC classified this service bulletin as mandatory and issued DGAC AD 94–264(A), dated December 7, 1994, in order to assure the continued airworthiness of these airplanes in France.

The FAA's Determination

This airplane model is manufactured in France and is type certificated for operation in the United States under the provisions of § 21.29 of the Federal Aviation Regulations (14 CFR 21.29) and the applicable bilateral airworthiness agreement.

Pursuant to this bilateral airworthiness agreement, the DGAC has kept the FAA informed of the situation described above. The FAA has examined the findings of the DGAC; reviewed all available information, including the service information referenced above; and determined that AD action is necessary for products of this type design that are certificated for operation in the United States.

Explanation of the Provisions of the Proposed AD

Since an unsafe condition has been identified that is likely to exist or develop in other Socata Models TB9 and TB10 airplanes of the same type design registered in the United States, the FAA is proposing AD action. The proposed AD would require repetitively inspecting the wing front attachments on the wing and fuselage sides for cracks, and repetitively incorporating a certain modification kit (type of kit and time of incorporation depends on whether cracks are found during the inspection). Accomplishment of the proposed inspections would be in accordance with Socata Service Bulletin No. SB 10–081–57, Amendment 1, dated August 1996. Accomplishment of the proposed modifications, as applicable, would be required in accordance with the Technical Instructions for Modification included with each kit.

Cost Impact

The FAA estimates that 113 airplanes in the U.S. registry would be affected by the proposed AD.

The proposed inspection would take approximately 3 workhours per airplane to accomplish, at an average labor rate of approximately $60 an hour. Based on these figures, the total cost impact of the proposed inspection on U.S. operators is estimated to be $20,340, or $180 per airplane.

The proposed modification would take approximately 32 workhours to accomplish, at an average labor rate of $60 per hour. Parts cost approximately $1,125 per airplane. Based on these figures, the total cost impact of the proposed modifications on U.S. operators is estimated to be $344,085, or $3,045 per airplane.

Regulatory Impact

The regulations proposed herein would not have substantial direct effects on the States, on the relationship between the national government and the States, or on the distribution of power and responsibilities among the various levels of government. Therefore, in accordance with Executive Order 12612, it is determined that this proposal would not have sufficient federalism implications to warrant the preparation of a Federalism Assessment.

For the reasons discussed above, I certify that this action (1) is not a ''significant regulatory action'' under Executive Order 12866; (2) is not a ''significant rule'' under DOT Regulatory Policies and Procedures (44 FR 11034, February 26, 1979); and (3) if promulgated, will not have a significant economic impact, positive or negative, on a substantial number of small entities under the criteria of the Regulatory Flexibility Act. A copy of the draft regulatory evaluation prepared for this action has been placed in the Rules Docket. A copy of it may be obtained by contacting the Rules Docket at the location provided under the caption **ADDRESSES**.

List of Subjects in 14 CFR Part 39

Air transportation, Aircraft, Aviation safety, Safety.

The Proposed Amendment

Accordingly, pursuant to the authority delegated to me by the Administrator, the Federal Aviation Administration proposes to amend part 39 of the Federal Aviation Regulations (14 CFR part 39) as follows:

PART 39—AIRWORTHINESS DIRECTIVES

1. The authority citation for part 39 continues to read as follows:

Authority: 49 U.S.C. 106(g), 40113, 44701.

§ 39.13 [Amended]

2. Section 39.13 is amended by adding a new airworthiness directive (AD) to read as follows:

Socata—Groupe Aerospatiale: Docket No. 95–CE–72–AD.

Applicability: The following airplane models and serial numbers, certificated in any category:

Model TB9, serial numbers 1 through 9999; and

Model TB10, serial numbers 1 through 803, 805, 806, 809 through 815, 820, 821, and 822.

Note 1: This AD applies to each airplane identified in the preceding applicability provision, regardless of whether it has been modified, altered, or repaired in the area subject to the requirements of this AD. For airplanes that have been modified, altered, or repaired so that the performance of the requirements of this AD is affected, the owner/operator must request approval for an alternative method of compliance in accordance with paragraph (g) of this AD. The request should include an assessment of the effect of the modification, alteration, or repair on the unsafe condition addressed by this AD; and, if the unsafe condition has not been eliminated, the request should include specific proposed actions to address it.

Compliance: Required as indicated in the body of this AD, unless already accomplished.

To prevent structural failure of the wing front attachments caused by fatigue cracking, which could result in the wing separating from the airplane if the airplane is operated with cracked wing front attachments over an extended period of time, accomplish the following:

Note 2: The compliance times of this AD are presented in landings instead of hours time-in-service (TIS). If the number of landings is unknown, hours TIS may be used by multiplying the number of hours TIS by 1.5.

(a) For all affected airplanes, upon accumulating 3,000 landings on the wing front attachments or within the next 100 landings after the effective date of this AD,

whichever occurs later, and thereafter at intervals not to exceed 3,000 landings, inspect the wing front attachments (both the wing sides and fuselage sides) in accordance with Socata Service Bulletin No. SB 10–081–57, Amendment 1, dated August 1996.

(b) For all affected airplanes, accomplish the following on the wing front attachments on the wing sides:

(1) If no cracks are found on the wing front attachments on the wing sides during any inspection required by paragraph (a) of this AD, upon accumulating 12,000 landings on these wing front attachments or within the next 100 landings after the effective date of this AD, whichever occurs later, and thereafter at intervals not to exceed 6,000 landings provided no cracks are found during any inspection required by paragraph (a) of this AD, incorporate Modification Kit OPT10 911000 in accordance with Socata Technical Instruction No. 9110, which incorporates the following pages:

Pages	Revision level	Date
0 and 1	Amendment	January 31, 1992.
2 through 11	Original Issue	October 1985.

(2) If a crack(s) is found on the wing front attachments on the wing sides during any inspection required by paragraph (a) of this AD, prior to further flight, incorporate Modification Kit OPT10 911000 in accordance with Socata Technical Instruction No. 9110. Incorporate this kit at intervals not to exceed 6,000 landings thereafter provided no cracks are found during any inspection required by paragraph (a) of this AD.

(c) For Models TB9 and TB10 airplanes, with a serial number in the range of 1 through 399, or with a serial number of 413; that do not have either Socata Service Letter (SL) 10–14 incorporated or Socata Modification Kit OPT10 908100 incorporated, accomplish the following on the wing front attachments on the fuselage sides:

(1) If no cracks are found on the wing front attachments on the fuselage sides during any inspection required by paragraph (a) of this AD, upon accumulating 6,000 landings on these wing front attachments or within the next 100 landings after the effective date of this AD, whichever occurs later, and thereafter at intervals not to exceed 12,000 landings provided no cracks are found during any inspection required by paragraph (a) of this AD, incorporate Modification Kit OPT10 919800 in accordance with Socata Technical Instruction of Modification OPT10 9198–53, dated October 1994.

(2) If a crack(s) is found on the wing front attachments on the fuselage sides during any inspection required by paragraph (a) of this AD, prior to further flight, incorporate Modification Kit OPT10 919800 in accordance with Socata Technical Instruction of Modification OPT10 9198–53, dated October 1994. Incorporate this kit at intervals not to exceed 12,000 landings thereafter provided no cracks are found during any inspection required by paragraph (a) of this AD.

(d) For Models TB9 and TB10 airplanes, with a serial number in the range of 1 through 399, or with a serial number of 413; that have either Socata Service Letter (SL) 10–14 incorporated or Socata Modification Kit OPT10 908100 incorporated, accomplish the following on the wing front attachments on the fuselage sides:

(1) If no cracks are found on the wing front attachments on the fuselage sides during any inspection required by paragraph (a) of this AD, upon accumulating 12,000 landings on these wing front attachments or within the next 100 landings after the effective date of this AD, whichever occurs later, and thereafter at intervals not to exceed 12,000 landings provided no cracks are found during any inspection required by paragraph (a) of this AD, incorporate Modification Kit OPT10 919800 in accordance with Socata Technical Instruction of Modification OPT10 9198–53, dated October 1994.

(2) If a crack(s) is found on the wing front attachments on the fuselage sides during any inspection required by paragraph (a) of this AD, prior to further flight, incorporate Modification Kit OPT10 919800 in accordance with Socata Technical Instruction of Modification OPT10 9198–53, dated October 1994. Incorporate this kit at intervals not to exceed 12,000 landings thereafter provided no cracks are found during any inspection required by paragraph (a) of this AD.

(e) For Models TB9 and TB10 airplanes, with a serial number in the range of 400 through 412, or with a serial number in the range of 414 through 9999; accomplish the following on the wing front attachments on the fuselage sides:

(1) If no cracks are found on the wing front attachments on the fuselage sides during any inspection required by paragraph (a) of this AD, upon accumulating 12,000 landings on these wing front attachments or within the next 100 landings after the effective date of this AD, whichever occurs later, and thereafter at intervals not to exceed 12,000 landings provided no cracks are found during any inspection required by paragraph (a) of this AD, incorporate Modification Kit OPT10 908100 in accordance with Socata Technical Instruction of Modification OPT10 9181–53, Amendment 2, dated October 1994.

(2) If a crack(s) is found on the wing front attachments on the fuselage sides during any inspection required by paragraph (a) of this AD, prior to further flight, incorporate Modification Kit OPT10 908100 in accordance with Socata Technical Instruction of Modification OPT10 9181–53, Amendment 2, dated October 1994. Incorporate this kit at intervals not to exceed 12,000 landings thereafter provided no cracks are found during any inspection required by paragraph (a) of this AD.

Note 3: ''Unless already accomplished'' credit may be used if the kits that are required by paragraphs (c)(1), (d)(1), and (e)(1) of this AD are aleady incorporated on the applicable airplanes. As specified in the AD, repetitive incorporation of these kits would still be required at intervals not to exceed 12,000 landings provided no cracks are found.

(f) Special flight permits may be issued in accordance with sections 21.197 and 21.199 of the Federal Aviation Regulations (14 CFR 21.197 and 21.199) to operate the airplane to a location where the requirements of this AD can be accomplished.

(g) An alternative method of compliance or adjustment of the initial or repetitive compliance times that provides an equivalent level of safety may be approved by the Manager, Small Airplane Directorate, FAA, 1201 Walnut, suite 900, Kansas City, Missouri 64106. The request shall be forwarded through an appropriate FAA Maintenance Inspector, who may add comments and then send it to the Manager, Small Airplane Directorate.

Note 4: Information concerning the existence of approved alternative methods of compliance with this AD, if any, may be obtained from the Small Airplane Directorate.

(h) Questions or technical information related to the service information referenced in this AD should be directed to the SOCATA—Groupe AEROSPATIALE, Socata Product Support, Aeroport Tarbes-Ossun-Lourdes, B P 930, 65009 Tarbes Cedex, France; telephone: 33–5–62–41–76–52; facsimile: 33–5–62–41–76–54; or the Product Support Manager, SOCATA Aircraft, North Perry Airport, 7501 Pembroke Road, Pembroke Pines, Florida 33023; telephone: (954) 893–1400; facsimile: (954) 964–1402. This service information may be examined at the FAA, Central Region, Office of the Regional Counsel, Room 1558, 601 E. 12th Street, Kansas City, Missouri.

Note 5: The subject of this AD is addressed in French AD 94–264(A), dated December 7, 1994.

Issued in Kansas City, Missouri, on May 14, 1998.

Michael Gallagher,

Manager, Small Airplane Directorate, Aircraft Certification Service.

[FR Doc. 98–13653 Filed 5–21–98; 8:45 am]

BILLING CODE 4910–13–P

DEPARTMENT OF HEALTH AND HUMAN SERVICES

Food and Drug Administration

21 CFR Parts 315 and 601

[Docket No. 98N–0040]

Regulations for In Vivo Radiopharmaceuticals Used for Diagnosis and Monitoring

AGENCY: Food and Drug Administration, HHS.

ACTION: Proposed rule.

SUMMARY: The Food and Drug Administration (FDA), in response to the requirements of the Food and Drug Administration Modernization Act of 1997 (FDAMA), is proposing to amend the drug and biologics regulations by adding provisions that would clarify the evaluation and approval of in vivo

radiopharmaceuticals used in the diagnosis or monitoring of diseases. The proposed regulations would describe certain types of indications for which FDA may approve diagnostic radiopharmaceuticals. The proposed rule also would include criteria that the agency would use to evaluate the safety and effectiveness of a diagnostic radiopharmaceutical under the Federal Food, Drug, and Cosmetic Act (the act) and the Public Health Service Act (the PHS Act).

DATES: Submit comments on this proposed rule on or before August 5, 1998. Submit written comments on the information collection provisions by June 22, 1998. See section IV of this document for the proposed effective date of a final rule based on this document.

ADDRESSES: Submit written comments to the Dockets Management Branch (HFA–305), Food and Drug Administration, 12420 Parklawn Dr., rm. 1–23, Rockville, MD 20857. Submit comments of the information collection provisions to the Office of Information and Regulatory Affairs, OMB, New Executive Office Bldg., 725 17th St. NW., Washington, DC 20503, Attn: Desk Officer for FDA.

FOR FURTHER INFORMATION CONTACT: Dano B. Murphy, Center for Biologics Evaluation and Research (HFM–17), Food and Drug Administration, 1401 Rockville Pike, Rockville, MD 20852–1448, 301–827–6210; or Brian L. Pendleton, Center for Drug Evaluation and Research (HFD–7), Food and Drug Administration, 5600 Fishers Lane, Rockville, MD 20857, 301–594–5649.

SUPPLEMENTARY INFORMATION:

I. Introduction

Radiopharmaceuticals are used for a wide variety of diagnostic, monitoring, and therapeutic purposes. Diagnostic radiopharmaceuticals are used to image or otherwise identify an internal structure or disease process, while therapeutic radiopharmaceuticals are used to effect a change upon a targeted structure or disease process.

The action of most radiopharmaceuticals is derived from two components: A nonradioactive delivery component, i.e., a carrier and/or ligand; and a radioactive imaging component, i.e., a radionuclide. Nonradioactive delivery ligands and carriers are usually peptides, small proteins, or antibodies. The purpose of ligands and carriers is to direct the radionuclide to a specific body location or process. Once a radiopharmaceutical has reached its targeted location, the radionuclide component can be detected. The imaging component usually is a short-lived radioactive molecule that emits radioactive decay photons having sufficient energy to penetrate the tissue mass of the patient. The emitted photons are detected by specialized devices that generate images of, or otherwise detect, radioactivity, such as nuclear medicine cameras and radiation detection probe devices.

On November 21, 1997, the President signed FDAMA into law. Section 122(a)(1) of FDAMA directs FDA to issue proposed and final regulations on the approval of diagnostic radiopharmaceuticals within specific timeframes. As defined in section 122(b) of FDAMA, a radiopharmaceutical is an article ''that is intended for use in the diagnosis or monitoring of a disease or a manifestation of a disease in humans * * * that exhibits spontaneous disintegration of unstable nuclei with the emission of nuclear particles or photons[,] or * * * any nonradioactive reagent kit or nuclide generator that is intended to be used in the preparation of any such article.'' Section 122(a)(1)(A) of FDAMA states that FDA regulations will provide that, in determining the safety and effectiveness of a radiopharmaceutical under section 505 of the act (for a drug) (21 U.S.C. 355) or section 351 of the PHS Act (for a biological product) (42 U.S.C. 262), the agency will consider the proposed use of the radiopharmaceutical in the practice of medicine, the pharmacological and toxicological activity of the radiopharmaceutical (including any carrier or ligand component), and the estimated absorbed radiation dose of the radiopharmaceutical.

FDAMA requires FDA to consult with patient advocacy groups, associations, physicians licensed to use radiopharmaceuticals, and the regulated industry before proposing any regulations governing the approval of radiopharmaceuticals. Accordingly, in the **Federal Register** of February 2, 1998 (63 FR 5338), FDA published a notification of a public meeting entitled ''Developing Regulations for In Vivo Radiopharmaceuticals Used for Diagnosis and Monitoring.'' The notice invited all interested persons to attend the meeting, scheduled for February 27, 1998, and to comment on how the agency should regulate radiopharmaceuticals. In particular, FDA invited comment on the following topics: (1) The effect of the use of a radiopharmaceutical in the practice of medicine on the nature and extent of safety and effectiveness evaluations; (2) the general characteristics of a radiopharmaceutical that should be considered in the preclinical and clinical pharmacological and toxicological evaluations of a radiopharmaceutical (including the radionuclide as well as the ligand and carrier components); (3) determination and consideration of a radiopharmaceutical's estimated absorbed radiation dose in humans; and (4) the circumstances under which an approved indication for marketing might refer to manifestations of disease (biochemical, physiological, anatomic, or pathological processes) common to, or present in, one or more disease states.

Approximately 50 individuals from industry, academic institutions, professional medical organizations, and patient advocacy groups attended the February 27, 1998, public meeting and/or submitted comments in response to the notice. FDA has considered all of these comments in drafting this proposed rule.

The proposed rule applies to the approval of in vivo radiopharmaceuticals (both drugs and biologics) used for diagnosis and monitoring. The proposed regulations will not apply to radiopharmaceuticals used for therapeutic purposes. The regulations include a definition of diagnostic radiopharmaceuticals (which includes radiopharmaceuticals used for monitoring) and provisions that address the following aspects of diagnostic radiopharmaceuticals: (1) General factors to be considered in determining safety and effectiveness, (2) possible indications for use, (3) evaluation of effectiveness, and (4) evaluation of safety.

To establish these regulations, FDA proposes to add a new part 315 to title 21 of the Code of Federal Regulations (CFR) and to rename subpart D and add §§ 601.30 through 601.35 in part 601 (21 CFR part 601). These new provisions would complement and clarify existing regulations on the approval of drugs and biologics in parts 314 (21 CFR parts 314) and 601, respectively. In addition to these regulatory changes, FDA is in the process of revising and supplementing its guidance to industry on product approval and other matters related to the regulation of diagnostic radiopharmaceutical drugs and biologics. This guidance will address the application of the proposed rule. FDA will make such guidance available in draft form for public comment in accordance with the agency's Good Guidance Practices (see 62 FR 8961, February 27, 1997).

Positron emission tomography (PET) drugs are a particular type of radiopharmaceutical. Section 121 of FDAMA addresses these products

separately from other diagnostic radiopharmaceuticals and requires FDA to develop appropriate approval procedures and current good manufacturing practice requirements for PET products within the next 2 years. Although FDA expects the standards for determining the safety and effectiveness of diagnostic radiopharmaceuticals set forth in this proposed rule to apply to PET diagnostic products under the approval procedures that FDA intends to develop for those products, the agency will address this issue when it publishes its proposal on PET drugs.

II. Description of the Proposed Rule

The proposed rule would add a new part 315 to the CFR containing provisions on radiopharmaceutical drugs subject to section 505 of the act that are used for diagnosis and monitoring. Corresponding provisions applicable to radiopharmaceutical biological products subject to licensure under section 351 of the PHS Act would be set forth in revised subpart D of part 601. Both proposed regulations are discussed in the following section of this document.

A. Scope

Proposed §§ 315.1 and 601.30 define the scope of the diagnostic radiopharmaceutical provisions, i.e., that they apply only to radiopharmaceuticals used for diagnosis and monitoring and not to radiopharmaceuticals intended for therapeutic uses. FDA intends that these regulations will apply only to diagnostic radiopharmaceuticals that are administered in vivo. In vitro diagnostic products generally are regulated as medical devices under the act, although they may also be biological products subject to licensure under section 351 of the PHS Act (see 21 CFR 809.3(a)).

Some radiopharmaceuticals may have utility as both diagnostic and therapeutic drugs or biologics. When a particular radiopharmaceutical drug or biologic is proposed for both diagnostic and therapeutic uses, FDA will evaluate the diagnostic claims under the provisions in part 315 (for drugs) or subpart D of part 601 (for biologics) and evaluate the therapeutic claims under the regulations applicable to other drug or biologic applications.

B. Definition

The proposed ruling in §§ 315.2 and 601.31 would include a definition of ''diagnostic radiopharmaceutical'' that is identical to the definition of ''radiopharmaceutical'' in section 122(b) of FDAMA. Thus, a ''diagnostic radiopharmaceutical'' would be defined as an article that is intended for use in the diagnosis or monitoring of a disease or a manifestation of a disease in humans; and that exhibits spontaneous disintegration of unstable nuclei with the emission of nuclear particles or photons; or any nonradioactive reagent kit or nuclide generator that is intended to be used in the preparation of such article. FDA interprets ''disease or a manifestation of a disease'' to include conditions that may not ordinarily be considered diseases, such as essential thrombocytopenia and bone fractures. In addition, FDA interprets the definition as including articles that exhibit spontaneous disintegration leading to the reconstruction of unstable nuclei and the subsequent emission of nuclear particles or photons.

C. General Factors Relevant to Safety and Effectiveness

In §§ 315.3 and 601.32, FDA proposes to incorporate in its regulations the requirement in section 122 of FDAMA that the agency consider certain factors in determining the safety and effectiveness of diagnostic radiopharmaceuticals under section 505 of the act or section 351 of the PHS Act. These factors are as follows: (1) The proposed use of a diagnostic radiopharmaceutical in the practice of medicine; (2) the pharmacological and toxicological activity of a diagnostic radiopharmaceutical, including any carrier or ligand component; and (3) the estimated absorbed radiation dose of the diagnostic radiopharmaceutical. Other sections of the proposed regulations describe how the agency will assess these factors. In addition, FDA intends to provide further information in guidance to industry.

D. Indications

In §§ 315.4(a) and 601.33(a), FDA proposes to specify some of the types of indications for which the agency may approve a diagnostic radiopharmaceutical. These categories of indications are as follows: (1) Structure delineation; (2) functional, physiological, or biochemical assessment; (3) disease or pathology detection or assessment; and (4) diagnostic or therapeutic management. Approval may be possible for claims other than those listed. (In these and other provisions on diagnostic radiopharmaceuticals in the proposed rule, the terms ''indication,'' ''indication for use,'' and ''claim'' have the same meaning and are used interchangeably.)

A diagnostic radiopharmaceutical that is intended to provide structural delineation is designed to locate and outline anatomic structures. For example, a radiopharmaceutical might be developed to distinguish a structure that cannot routinely be seen by any other imaging modality, such as a drug designed to image the lymphatics of the small bowel.

A diagnostic radiopharmaceutical that is intended to provide a functional, physiological, or biochemical assessment is used to evaluate the function, physiology, or biochemistry of a tissue, organ system, or body region. Functional, physiological, and biochemical assessments are designed to determine if a measured parameter is normal or abnormal. Examples of a functional or physiological assessment include the determination of the cardiac ejection fraction, myocardial wall motion, and cerebral blood flow. Examples of a biochemical assessment include the evaluation of sugar, lipid, protein, or nucleic acid synthesis or metabolism.

A diagnostic radiopharmaceutical that is intended to provide disease or pathology detection or assessment information assists in the detection, location, or characterization of a specific disease or pathological state. Examples of this type of diagnostic radiopharmaceutical include a radiolabeled monoclonal antibody used to attach to a specific tumor antigen and thus detect a tumor and a peptide that participates in an identifiable transporter function associated with a specific neurological disease.

A diagnostic radiopharmaceutical that is intended to assist in diagnostic or therapeutic patient management provides imaging, or related, information leading directly to a diagnostic or therapeutic patient management decision. Examples of this type of indication include: (1) Assisting in a determination of whether a patient should undergo a diagnostic coronary angiography or will have predictable clinical benefit from a coronary revascularization, and (2) assisting in a determination of the resectability of a primary tumor.

Proposed §§ 315.4(b) and 601.33(b) reflect the intent of section 122(a)(2) of FDAMA, which states that in appropriate cases, FDA may approve a diagnostic radiopharmaceutical for an indication that refers to ''manifestations of disease (such as biochemical, physiological, anatomic, or pathological processes) common to, or present in, one or more disease states.'' Where a diagnostic radiopharmaceutical is not intended to provide disease-specific information, the proposed indications for use may refer to a process or to more than one disease or condition. This would allow FDA to approve a product

for an indication (e.g., delineation of a particular anatomic structure or functional assessment of a specific organ system) that would encompass manifestations of disease that are common to multiple disease states. An example of a manifestation that is common to multiple diseases is tumor metastases to the liver caused by various malignancies.

E. Evaluation of Effectiveness

The specific criteria that FDA would use to evaluate the effectiveness of a diagnostic radiopharmaceutical are stated in proposed §§ 315.5(a) and 601.34(a). These provisions state that FDA assesses the effectiveness of a diagnostic radiopharmaceutical by evaluating its ability to provide useful clinical information that is related to its proposed indication for use. The nature of the indication determines the method of evaluation, and because an application may include more than one type of claim, FDA might need to employ multiple evaluation criteria. FDA would require that any such claim be supported with information demonstrating that the potential benefit of the diagnostic radiopharmaceutical outweighs the risk to the patient from administration of the product.

Under proposed §§ 315.5(a)(1) and 601.34(a)(1), a claim of structure delineation would be established by demonstrating the ability of a diagnostic radiopharmaceutical to locate and characterize normal anatomic structures. In §§ 315.5(a)(2) and 601.34(a)(2), FDA proposes that a claim of functional, physiological, or biochemical assessment would be established by demonstrating that the diagnostic radiopharmaceutical could reliably measure the function or the physiological, biochemical, or molecular process. A reliable measurement would need to be supported by studies in normal and abnormal patient populations, consistent with the proposed claim and would require a qualitative or quantitative understanding of how the measurement varies in normal and abnormal subjects.

The agency proposes, in §§ 315.5(a)(3) and 601.34(a)(3), that a claim of disease or pathology detection or assessment would be established by demonstrating in a defined clinical setting that the diagnostic radiopharmaceutical had sufficient accuracy in identifying or characterizing the disease or pathology. The term ''accuracy'' refers to the diagnostic performance of the product as measured by factors such as sensitivity, specificity, positive predictive value, negative predictive value, and reproducibility of test interpretation. The term ''sufficient accuracy'' means accuracy that is good enough to indicate that the product would be useful in one or more clinical settings. FDA believes that the data demonstrating accuracy must be obtained from patients in a clinical setting(s) reflecting the proposed indication(s). For example, if a claim is for diagnosis of tumor in patients with a negative computed tomography (CT) scan for disease and a borderline serum carcinoembryonic antigen (CEA), the accuracy of the diagnostic radiopharmaceutical should be assessed in such patients rather than only in patients with CT-diagnosed disease or high serum CEA.

Under proposed §§ 315.5(a)(4) and 601.34(a)(4), for a claim of diagnostic or therapeutic patient management, the applicant must establish effectiveness by demonstrating in a defined clinical setting that the test is useful in such patient management. For example, an imaging agent might be studied in a manner that would demonstrate its usefulness in directing local excision of cancer-laden lymph nodes and sparing a wide area of nondiseased lymphatic tissue.

In §§ 315.5(a)(5) and 601.34(a)(5), FDA proposes that, for claims that do not fall within the indication categories in §§ 315.4 and 601.33, the applicant may consult with the agency on how to establish effectiveness.

Proposed §§ 315.5(b) and 601.34(b) specify that the accuracy and usefulness of diagnostic information provided by a diagnostic radiopharmaceutical must be determined by comparison with a reliable assessment of actual clinical status. To obtain such a reliable assessment, a diagnostic standard or standards of demonstrated accuracy must be used, if available. An example of such a standard is a tissue biopsy confirmation of a site of a diagnostic radiopharmaceutical localization. If an accurate diagnostic standard is not available, the actual clinical status must be established in some other manner, such as through patient followup.

FDA intends to develop a guidance document that will provide more detailed guidance to industry on the types of clinical investigations that would meet regulatory requirements for obtaining approval for particular types of indications for diagnostic radiopharmaceuticals. The guidance may address such matters as appropriate clinical endpoints and suitable diagnostic standards. For indications that are common to multiple disease states, the guidance may address clinical trial design and statistical analysis considerations for patient populations that provide a range of representative disease processes.

F. Evaluation of Safety

FDA's proposed approach to the evaluation of the safety of diagnostic radiopharmaceuticals is set forth in §§ 315.6 and 601.35. Proposed §§ 315.6(a) and 601.35(a) state that the safety assessment of a diagnostic radiopharmaceutical includes, among other things, the following: The radiation dose; the pharmacology and toxicology of the radiopharmaceutical, including any radionuclide, carrier, or ligand; the risks of an incorrect diagnostic determination; the adverse reaction profile of the drug; and results of human experience with the radiopharmaceutical for other uses.

In §§ 315.6(b) and 601.35(b), FDA proposes that the assessment of the adverse reaction profile of a diagnostic radiopharmaceutical (including the carrier or ligand) include, but not be limited to, an evaluation of the product's potential to elicit the following: (1) Allergic or hypersensitivity responses, (2) immunologic responses, (3) changes in the physiologic or biochemical function of target and non-target tissues, and (4) clinically detectable signs or symptoms.

Proposed §§ 315.6(c)(1) and 601.35(c)(1) state that FDA may require, among other information, the following types of preclinical and clinical data to establish the safety of a diagnostic radiopharmaceutical: (1) Pharmacology data, (2) toxicology data, (3) a clinical safety profile, and (4) a radiation safety assessment. Other information that may be required to establish safety includes information on chemistry, manufacturing, and controls.

Under proposed §§ 315.6(c)(2) and 601.35(c)(2), the amount of new safety data required would depend on the characteristics of the diagnostic radiopharmaceutical and available information on the safety of the product obtained from other studies and uses. This information might include, but would not be limited to, the dose, route of administration, frequency of use, half-life of the ligand or carrier, half-life of the radionuclide of the product, and results of preclinical studies on the product. Proposed §§ 315.6(c)(2) and 601.35(c)(2) further states that FDA will categorize diagnostic radiopharmaceuticals based on defined characteristics that relate to safety risk and will specify the amount and type of safety data appropriate for each category. The paragraph states, as an example, that required safety data would be limited for diagnostic

radiopharmaceuticals with well-established low-risk profiles.

Proposed §§ 315.6(d) and 601.35(d) discusses the radiation safety assessment that will be required for a diagnostic radiopharmaceutical. FDA proposes that the applicant for approval of a diagnostic radiopharmaceutical establish the radiation dose of the product by radiation dosimetry evaluations in humans and appropriate animal models. Such evaluations must consider dosimetry to the total body, to specific organs or tissues, and, as appropriate, to target organs or target tissues. FDA notes that the use of occupational radiation dosimetry limits is not required in performing such evaluations. The maximum tolerated dose of the diagnostic radiopharmaceutical need not be established.

FDA intends to provide guidance on safety assessments for diagnostic radiopharmaceuticals. Such guidance may include a classification of diagnostic radiopharmaceuticals based on quantity administered, adverse event profile, and proposed patient population. The guidance would allow the safety information required to meet regulatory requirements to vary according to the class of the radiopharmaceutical. The guidance will also address evaluations of radiation dosimetry.

III. Analysis of Economic Impacts

FDA has examined the impact of the proposed rule under Executive Order 12866, under the Regulatory Flexibility Act (5 U.S.C. 601–612), and under the Unfunded Mandates Reform Act (Pub. L. 104–114). Executive Order 12866 directs agencies to assess all costs and benefits of available regulatory approaches that maximize net benefits (including potential economic, environmental, public health and safety, and other advantages, distributive impacts and equity). Under the Regulatory Flexibility Act, unless an agency certifies that a rule will not have a significant economic impact on a substantial number of small entities, the agency must analyze significant regulatory options that would minimize any significant economic impact of a rule on small entities. The Unfunded Mandates Reform Act requires (in section 202) that agencies prepare an assessment of anticipated costs and benefits before proposing any mandate that results in an expenditure by State, local, and tribal governments, in the aggregate, or by the private sector, of $100 million in any 1 year.

The agency has reviewed this proposed rule and has determined that the rule is consistent with the principles set forth in the Executive Order and in these two statutes. FDA finds that the rule will not be a significant rule under the Executive Order. Further, the agency finds that, under the Regulatory Flexibility Act, the rule will not have a significant economic impact on a substantial number of small entities. Also, since the expenditures resulting from the standards identified in the rule are less than $100 million, FDA is not required to perform a cost/benefit analysis according to the Unfunded Mandates Reform Act.

The proposed rule clarifies existing FDA requirements for the approval and evaluation of drug and biological products already in place under the act and the PHS Act. Existing regulations (parts 314 and 601) specify the type of information that manufacturers are required to submit in order for the agency to properly evaluate the safety and effectiveness of new drugs or biological products. Such information is usually submitted as part of a new drug application (NDA) or biological license application or as a supplement to an approved application. The information typically includes both nonclinical and clinical data concerning the product's pharmacology, toxicology, adverse events, radiation safety assessments, chemistry, and manufacturing and controls.

The proposed regulation recognizes the unique characteristics of diagnostic radiopharmaceuticals and sets out the agency's approach to the evaluation of these products. For certain diagnostic radiopharmaceuticals, the proposed regulation may reduce the amount of safety information that must be obtained by conducting new clinical studies. This would include approved radiopharmaceuticals with well-established low-risk safety profiles because such products might be able to use scientifically sound data established during use of the radiopharmaceutical to support the approval of a new indication for use. In addition, the clarification achieved by the proposed rule is expected to reduce the costs of submitting an application for approval of a diagnostic radiopharmaceutical by improving communications between applicants and the agency and by reducing wasted effort directed toward the submission of data that is not necessary to meet the statutory approval standard.

Manufacturers of in vitro and in vivo diagnostic substances are defined by the Small Business Administration as small businesses if such manufacturers employ fewer than 500 employees. The agency finds that only 2 of the 8 companies that currently manufacture or market radiopharmaceuticals have fewer than 500 employees.[1] Moreover, the proposed rule would not impose any additional costs but, rather, is expected to reduce costs for manufacturers of certain diagnostic radiopharmaceuticals, as discussed previously. Therefore, in accordance with the Regulatory Flexibility Act, FDA certifies that this rule will not have a significant economic impact on a substantial number of small entities.

IV. Proposed Effective Date

FDA proposes that any final rule that may issue based on this proposal become effective 30 days after the date of its publication in the **Federal Register**.

V. Environmental Impact

The agency has determined under 21 CFR 25.24(h) that this action is of a type that does not individually or cumulatively have a significant effect on the human environment. Therefore, neither an environmental assessment nor an environmental impact statement is required.

VI. The Paperwork Reduction Act of 1995

This proposed rule contains information collection provisions that are subject to review by the Office of Management and Budget (OMB) under the Paperwork Reduction Act of 1995 (44 U.S.C. 3501–3520). A description of these provisions is shown below with an estimate of the annual reporting burden. Included in the estimate is the time for reviewing the instructions, searching existing data sources, gathering and maintaining the data needed, and completing and reviewing each collection of information.

FDA invites comments on: (1) Whether the proposed collection of information is necessary for the proper performance of FDA's functions, including whether the information will have practical utility; (2) the accuracy of FDA's estimate of the burden of the proposed collection of information, including the validity of the methodology and assumptions used; (3) ways to enhance the quality, utility, and clarity of the information to be collected; and (4) ways to minimize the burden of the collection of information on respondents, including through the use of automated collection techniques, when appropriate, and other forms of information technology.

[1] Medical and Healthcare Marketplace Guide, Dorland's Biomedical, sponsored by Smith Barney Health Care Group, 13th ed., 1997 to 1998.

Title: Regulations for In Vivo Radiopharmaceuticals Used for Diagnosis and Monitoring.
Description: FDA is proposing regulations for the evaluation and approval of in vivo radiopharmaceuticals used for diagnosis and monitoring. The proposed rule would clarify existing FDA requirements for approval and evaluation of drug and biological products already in place under the authorities of the act and the PHS Act. Those regulations, which appear in primarily at parts 314 and 601, specify the information that manufacturers must submit to FDA for the agency to properly evaluate the safety and effectiveness of new drugs or biological products. The information, which is usually submitted as part of an NDA or new biological license application or as a supplement to an approved application, typically includes, but is not limited to, nonclinical and clinical data on the pharmacology, toxicology, adverse events, radiation safety assessments, and chemistry, manufacturing and controls. The content and format of an application for approval of new drugs and antibiotics are set out in § 314.50 and for new biological products in § 601.25. Under the proposed regulation, information required under the act and the PHS Act and needed by FDA to evaluate safety and effectiveness would still need to be reported.
Description of Respondents: Manufacturers of in vivo radiopharmaceuticals used for diagnosis and monitoring.

To estimate the potential number of respondents that would submit applications or supplements for diagnostic radiopharmaceuticals, FDA used the number of approvals granted in fiscal year 1997 (FY 1997) to approximate the number of future annual applications. In FY 1997, FDA approved seven diagnostic radiopharmaceuticals and received one new indication supplement; of these, three respondents received approval through the Center for Drug Evaluation and Research and five received approval through the Center for Biologics Evaluation and Research. The annual frequency of responses was estimated to be one response per application or supplement. The hours per response refers to the estimated number of hours that an applicant would spend preparing the information referred to in the proposed regulations. The time needed to prepare a complete application is estimated to be approximately 10,000 hours, roughly one-fifth of which, or 2,000 hours, is estimated to be spent preparing the portions of the application that are affected by these proposed regulations. The proposed rule would not impose any additional reporting burden beyond the estimated current burden of 2,000 hours because safety and effectiveness information is already required by preexisting regulations (parts 314 and 601). In fact, clarification by the proposed regulation of FDA's standards for evaluation of diagnostic radiopharmaceuticals is expected to streamline overall information collection burdens, particularly for diagnostic radiopharmaceuticals that may have well-established low-risk safety profiles, by enabling manufacturers to tailor information submissions and avoid conducting unnecessary clinical studies. The following table indicates estimates of the annual reporting burdens for the preparation of the safety and effectiveness sections of an application that are imposed by existing regulations. The burden totals do not include an increase in burden because no increase is anticipated. This estimate does not include the actual time needed to conduct studies and trials or other research from which the reported information is obtained. FDA invites comments on this analysis of information collection burdens.

TABLE 1.—ESTIMATED ANNUAL REPORTING BURDEN[1]

21 CFR Section	No. of Respondents	Annual Frequency per Response	Total Annual Responses	Hours per Response	Total Hours
315.4, 315.5, and 315.6	3	1	3	2,000	6,000
601.33, 601.34, and 601.35	5	1	5	2,000	10,000
Total	8		8		16,000

[1]There are no capital costs or operating and maintenance costs associated with this collection of information.

Interested persons and organizations may submit comments on the information collection requirements of this proposed rule by June 22, 1998, to Office of Information and Regulatory Affairs, OMB, New Executive Office Bldg., 725 17th St. NW., Washington, DC 20503, Attn: Desk Officer for FDA.

At the close of the 30-day comment period, FDA will review the comments received, revise the information collection provisions as necessary, and submit these provisions to OMB for review. FDA will publish a notice in the **Federal Register** when the information collection provisions are submitted to OMB, and an opportunity for public comment to OMB will be provided at that time. Prior to the effective date of the proposed rule, FDA will publish a notice in the **Federal Register** of OMB's decision to approve, modify, or disapprove the information collection provisions. An agency may not conduct or sponsor, and a person is not required to respond to, a collection of information unless it displays a currently valid OMB control number.

VII. Request for Comments

Interested persons may, on or before August 5, 1998, submit to the Dockets Management Branch (address above) written comments on this proposal. Two copies of any comments are to be submitted, except that individuals may submit one copy. Comments are to be identified with the docket number found in brackets in the heading of this document. Received comments may be seen in the office above between 9 a.m. and 4 p.m., Monday through Friday.

List of Subjects

21 CFR Part 315

Biologics, Diagnostic radiopharmaceuticals, Drugs.

21 CFR Part 601

Administrative practice and procedure, Biologics, Confidential business information.

Therefore, under the Federal Food, Drug, and Cosmetic Act, the Public Health Service Act, the Food and Drug Modernization Act, and under authority delegated to the Commissioner of Food and Drugs, it is proposed that 21 CFR chapter I be amended as follows:

1. Part 315 is added to read as follows:

PART 315—DIAGNOSTIC RADIOPHARMACEUTICALS

Sec.

315.1 Scope.
315.2 Definition.
315.3 General factors relevant to safety and effectiveness.
315.4 Indications.
315.5 Evaluation of effectiveness.
315.6 Evaluation of safety.

Authority: 21 U.S.C. 321, 331, 351, 352, 353, 355, 356, 357, 371, 374, 379e; sec. 122, Pub. L. 105–115, 111 Stat. 2322 (21 U.S.C. 355 note).

§ 315.1 Scope.

The regulations in this part apply to radiopharmaceuticals intended for in vivo administration for diagnostic and monitoring use. They do not apply to radiopharmaceuticals intended for therapeutic purposes. In situations where a particular radiopharmaceutical is proposed for both diagnostic and therapeutic uses, the radiopharmaceutical shall be evaluated taking into account each intended use.

§ 315.2 Definition.

For purposes of this part, diagnostic radiopharmaceutical means:

(a) An article that is intended for use in the diagnosis or monitoring of a disease or a manifestation of a disease in humans; and that exhibits spontaneous disintegration of unstable nuclei with the emission of nuclear particles or photons; or

(b) Any nonradioactive reagent kit or nuclide generator that is intended to be used in the preparation of such article as defined in paragraph (a) of this section.

§ 315.3 General factors relevant to safety and effectiveness.

FDA's determination of the safety and effectiveness of a diagnostic radiopharmaceutical shall include consideration of the following:

(a) The proposed use of the diagnostic radiopharmaceutical in the practice of medicine;

(b) The pharmacological and toxicological activity of the diagnostic radiopharmaceutical (including any carrier or ligand component of the diagnostic radiopharmaceutical); and

(c) The estimated absorbed radiation dose of the diagnostic radiopharmaceutical.

§ 315.4 Indications.

(a) For diagnostic radiopharmaceuticals, the categories of proposed indications for use include, but are not limited to, the following:

(1) Structure delineation.

(2) Functional, physiological, or biochemical assessment.

(3) Disease or pathology detection or assessment.

(4) Diagnostic or therapeutic patient management.

(b) Where a diagnostic radiopharmaceutical is not intended to provide disease-specific information, the proposed indications for use may refer to a process or to more than one disease or condition.

§ 315.5 Evaluation of effectiveness.

(a) The effectiveness of a diagnostic radiopharmaceutical is assessed by evaluating its ability to provide useful clinical information related to its proposed indications for use. The method of this evaluation will vary depending upon the proposed indication(s) and may use one or more of the following criteria:

(1) The claim of structure delineation is established by demonstrating the ability to locate and characterize normal anatomical structures.

(2) The claim of functional, physiological, or biochemical assessment is established by demonstrating reliable measurement of function(s) or physiological, biochemical, or molecular process(es).

(3) The claim of disease or pathology detection or assessment is established by demonstrating in a defined clinical setting that the diagnostic radiopharmaceutical has sufficient accuracy in identifying or characterizing the disease or pathology.

(4) The claim of diagnostic or therapeutic patient management is established by demonstrating in a defined clinical setting that the test is useful in diagnostic or therapeutic patient management.

(5) For a claim that does not fall within the indication categories identified in § 315.4, the applicant or sponsor should consult FDA on how to establish the effectiveness of the diagnostic radiopharmaceutical for the claim.

(b) The accuracy and usefulness of the diagnostic information shall be determined by comparison with a reliable assessment of actual clinical status. A reliable assessment of actual clinical status may be provided by a diagnostic standard or standards of demonstrated accuracy. In the absence of such diagnostic standard(s), the actual clinical status shall be established in another manner, e.g., patient followup.

§ 315.6 Evaluation of safety.

(a) Factors considered in the safety assessment of a diagnostic radiopharmaceutical include, among others, the following: The radiation dose; the pharmacology and toxicology of the radiopharmaceutical, including any radionuclide, carrier, or ligand; the risks of an incorrect diagnostic determination; the adverse reaction profile of the drug; and results of human experience with the radiopharmaceutical for other uses.

(b) The assessment of the adverse reaction profile includes, but is not limited to, an evaluation of the potential of the diagnostic radiopharmaceutical, including the carrier or ligand, to elicit the following:

(1) Allergic or hypersensitivity responses.

(2) Immunologic responses.

(3) Changes in the physiologic or biochemical function of the target and non-target tissues.

(4) Clinically detectable signs or symptoms.

(c) (1) To establish the safety of a diagnostic radiopharmaceutical, FDA may require, among other information, the following types of data:

(i) Pharmacology data.

(ii) Toxicology data.

(iii) Clinical adverse event data.

(iv) Radiation safety assessment.

(2) The amount of new safety data required will depend on the characteristics of the product and available information regarding the safety of the diagnostic radiopharmaceutical obtained from other studies and uses. Such information may include, but is not limited to, the dose, route of administration, frequency of use, half-life of the ligand or carrier, half-life of the radionuclide, and results of preclinical studies. FDA will categorize diagnostic radiopharmaceuticals based on defined characteristics relevant to risk and will specify the amount and type of safety data appropriate for each category. For example, for a category of radiopharmaceuticals with a well-established low-risk profile, required safety data will be limited.

(d) The radiation safety assessment shall establish the radiation dose of a diagnostic radiopharmaceutical by radiation dosimetry evaluations in humans and appropriate animal models. Such an evaluation must consider dosimetry to the total body, to specific organs or tissues, and, as appropriate, to target organs or target tissues. The maximum tolerated dose need not be established.

PART 601—LICENSING

2. The authority citation for part 601 is revised to read as follows:

Authority: 21 U.S.C. 321, 351, 352, 353, 355, 360, 360c–360f, 360h–360j, 371, 374,

379e, 381; 42 U.S.C. 216, 241, 262, 263; 15 U.S.C. 1451–1461; sec. 122, Pub. L. 105–115, 111 Stat. 2322 (21 U.S.C. 355 note).

§ 601.33 [Redesignated as § 601.28]

3. Section 601.33 *Samples for each importation* is redesignated as § 601.28 and transferred from subpart D to subpart C, and the redesignated section heading is revised to read as follows:

§ 601.28 Foreign establishments and products: samples for each importation.

* * * * *

4. Subpart D is amended by revising the title and adding §§ 601.30 through 601.35 to read as follows:

Subpart D—Diagnostic Radiopharmaceuticals

Sec.

601.30 Scope.
601.31 Definition.
601.32 General factors relevant to safety and effectiveness.
601.33 Indications.
601.34 Evaluation of effectiveness.
601.35 Evaluation of safety.

Subpart D—Diagnostic Radiopharmaceuticals

§ 601.30 Scope.

This subpart applies to radiopharmaceuticals intended for in vivo administration for diagnostic and monitoring use. It does not apply to radiopharmaceuticals intended for therapeutic purposes. In situations where a particular radiopharmaceutical is proposed for both diagnostic and therapeutic uses, the radiopharmaceutical shall be evaluated taking into account each intended use.

§ 601.31 Definition.

For purposes of this subpart, diagnostic radiopharmaceutical means:

(a) An article that is intended for use in the diagnosis or monitoring of a disease or a manifestation of a disease in humans; and that exhibits spontaneous disintegration of unstable nuclei with the emission of nuclear particles or photons; or

(b) Any nonradioactive reagent kit or nuclide generator that is intended to be used in the preparation of such article as defined in paragraph (a) of this section.

§ 601.32 General factors relevant to safety and effectiveness.

FDA's determination of the safety and effectiveness of a diagnostic radiopharmaceutical shall include consideration of the following:

(a) The proposed use of the diagnostic radiopharmaceutical in the practice of medicine;

(b) The pharmacological and toxicological activity of the diagnostic radiopharmaceutical (including any carrier or ligand component of the diagnostic radiopharmaceutical); and

(c) The estimated absorbed radiation dose of the diagnostic radiopharmaceutical.

§ 601.33 Indications.

(a) For diagnostic radiopharmaceuticals, the categories of proposed indications for use include, but are not limited to, the following:

(1) Structure delineation.

(2) Functional, physiological, or biochemical assessment.

(3) Disease or pathology detection or assessment.

(4) Diagnostic or therapeutic patient management.

(b) Where a diagnostic radiopharmaceutical is not intended to provide disease-specific information, the proposed indications for use may refer to a process or to more than one disease or condition.

§ 601.34 Evaluation of effectiveness.

(a) The effectiveness of a diagnostic radiopharmaceutical is assessed by evaluating its ability to provide useful clinical information related to its proposed indications for use. The method of this evaluation will vary depending upon the proposed indication and may use one or more of the following criteria:

(1) The claim of structure delineation is established by demonstrating the ability to locate and characterize normal anatomical structures.

(2) The claim of functional, physiological, or biochemical assessment is established by demonstrating reliable measurement of function(s) or physiological, biochemical, or molecular process(es).

(3) The claim of disease or pathology detection or assessment is established by demonstrating in a defined clinical setting that the diagnostic radiopharmaceutical has sufficient accuracy in identifying or characterizing the disease or pathology.

(4) The claim of diagnostic or therapeutic patient management is established by demonstrating in a defined clinical setting that the test is useful in diagnostic or therapeutic patient management.

(5) For a claim that does not fall within the indication categories identified in § 601.33, the applicant or sponsor should consult FDA on how to establish the effectiveness of the diagnostic radiopharmaceutical for the claim.

(b) The accuracy and usefulness of the diagnostic information shall be determined by comparison with a reliable assessment of actual clinical status. A reliable assessment of actual clinical status may be provided by a diagnostic standard or standards of demonstrated accuracy. In the absence of such diagnostic standard(s), the actual clinical status shall be established in another manner, e.g., patient followup.

§ 601.35 Evaluation of safety.

(a) Factors considered in the safety assessment of a diagnostic radiopharmaceutical include, among others, the following: The radiation dose; the pharmacology and toxicology of the radiopharmaceutical, including any radionuclide, carrier, or ligand; the risks of an incorrect diagnostic determination; the adverse reaction profile of the drug; and results of human experience with the radiopharmaceutical for other uses.

(b) The assessment of the adverse reaction profile includes, but is not limited to, an evaluation of the potential of the diagnostic radiopharmaceutical, including the carrier or ligand, to elicit the following:

(1) Allergic or hypersensitivity responses.

(2) Immunologic responses.

(3) Changes in the physiologic or biochemical function of the target and non-target tissues.

(4) Clinically detectable signs or symptoms.

(c) (1) To establish the safety of a diagnostic radiopharmaceutical, FDA may require, among other information, the following types of data:

(i) Pharmacology data.

(ii) Toxicology data.

(iii) Clinical adverse event data.

(iv) Radiation safety assessment.

(2) The amount of new safety data required will depend on the characteristics of the product and available information regarding the safety of the diagnostic radiopharmaceutical obtained from other studies and uses. Such information may include, but is not limited to, the dose, route of administration, frequency of use, half-life of the ligand or carrier, half-life of the radionuclide, and results of preclinical studies. FDA will categorize diagnostic radiopharmaceuticals based on defined characteristics relevant to risk and will specify the amount and type of safety data appropriate for each category. For example, for a category of radiopharmaceuticals with a well-established low-risk profile, required safety data will be limited.

(d) The radiation safety assessment shall establish the radiation dose of a

diagnostic radiopharmaceutical by radiation dosimetry evaluations in humans and appropriate animal models. Such an evaluation must consider dosimetry to the total body, to specific organs or tissues, and, as appropriate, to target organs or target tissues. The maximum tolerated dose need not be established.

Dated: April 15, 1998.

William B. Schultz,

Deputy Commissioner for Policy.

[FR Doc. 98–13797 Filed 5–20–98; 11:44 am]

BILLING CODE 4160–01–F

ENVIRONMENTAL PROTECTION AGENCY

40 CFR Part 89

[FRL–6014–4]

RIN 2060–AH65

Control of Emissions of Air Pollution from New CI Marine Engines at or Above 37 Kilowatts

AGENCY: Environmental Protection Agency (EPA).

ACTION: Advance notice of proposed rulemaking.

SUMMARY: EPA is issuing this Advance Notice of Proposed Rulemaking (ANPRM) to invite comment from all interested parties on EPA's plans to propose emission standards and other related provisions for new propulsion and auxiliary marine compression-ignition (CI) engines at or above 37 kilowatts (kW). This action supplements an earlier action for these engines initiated as part of an overall control strategy for new spark-ignition (SI) and CI marine engines (Notice of Proposed Rulemaking (NPRM) published November 9, 1994, modified in a Supplemental Notice of Proposed Rulemaking (SNPRM) published at February 7, 1996). The engines covered by today's action are used for propulsion and auxiliary power on both commercial and recreational vessels for a wide variety of applications including, but not limited to, barges, tugs, fishing vessels, ferries, runabouts, and cabin cruisers. This document does not address diesel marine engines rated under 37 kW, which are included in a proposed rulemaking for land-based nonroad CI engines published at September 24, 1997.

DATES: EPA requests comment on this ANPRM no later than June 22, 1998. Should a commenter miss the requested deadline, EPA will try to consider any comments received prior to publication of the NPRM that is expected to follow this ANPRM. There will also be opportunity for oral and written comment when EPA publishes the NPRM.

ADDRESSES: Materials relevant to this action are contained in Public Docket A–97–50, located at room M–1500, Waterside Mall (ground floor), U.S. Environmental Protection Agency, 401 M Street, S.W., Washington, DC 20460. The docket may be inspected from 8:00 a.m. until 5:30 p.m., Monday through Friday. A reasonable fee may be charged by EPA for copying docket materials.

Comments on this notice should be sent to Public Docket A–97–50 at the above address. EPA requests that a copy of comments also be sent to Jean Marie Revelt, U.S. EPA, 2565 Plymouth Road, Ann Arbor, MI 48105.

FOR FURTHER INFORMATION CONTACT: Margaret Borushko, U.S. EPA, Engine Programs and Compliance Division, (734) 214–4334.

SUPPLEMENTARY INFORMATION:

I. Purpose and Background

A. Purpose

Ground level ozone levels continue to be a significant problem in many areas of the United States. In the past, the main strategy employed in efforts to reduce ground-level ozone was reduction of volatile organic compounds (VOCs). In recent years, however, it has become clear that NO_X controls are often a more effective strategy for reducing ozone. As a result, attention has turned to NO_X emission controls as the key to improving air quality in many areas of the country. Building on the emission standards for CI engines promulgated in the early 1990s, EPA has recently promulgated a new emission control program for on-highway CI engines and proposed a new program for nonroad CI engines.[1, 2] Both of these programs contain stringent standards that will greatly reduce NOx emissions from these engines.

Similarly, particulate matter (PM) is also a problem in many areas of the country. Currently, there are 80 PM–10 nonattainment areas across the U.S. (PM–10 refers to particles less than or equal to 10 microns in diameter). PM, like ozone, has been linked to a range of serious respiratory health problems. Levels of PM caused by mobile sources are expected to rise in the future, due to the predicted increase in the number of individual mobile sources. Both of the new emission programs referred to above, for on-highway and nonroad CI engines, are anticipated to reduce ambient PM levels, either through a reduction in directly emitted particulate matter or through a reduction in indirect (atmospheric) PM formation caused by NO_X emissions.

Domestic and ocean-going CI marine engines account for approximately 4.5 percent of total mobile source NOx emissions nationwide. However, because of the nature of their operation, the contribution of these engines to NO_X levels in certain port cities and coastal areas is much higher. To address these emissions, today's action outlines a control program for CI marine engines at or above 37 kW that builds on EPA's programs for on-highway and land-based nonroad diesel engines identified above, EPA's recent locomotive rule, discussed below, and the International Convention on the Prevention of Pollution from Ships (MARPOL 73/78), Annex VI—Air Pollution developed by the International Maritime Organization (IMO).[3] If the emission standards and other requirements for those CI marine engines that use the same technologies reflected in EPA's on-highway, land-based nonroad, or locomotive rules are implemented as discussed in today's action, EPA would expect to see NO_X and PM reductions on a per-engine basis comparable to those achieved by engines subject to those rules. The numerical levels that EPA is considering applying to very large CI marine engines were intended by IMO to result in a 30 percent NO_X reduction. EPA continues to investigate IMO's anticipated reductions for those engines, based on the age and other characteristics of the U.S. fleet.

B. Statutory Authority

Section 213(a) of the Clean Air Act (CAA) directs EPA to: (1) conduct a study of emissions from nonroad engines and vehicles; (2) determine whether emissions of carbon monoxide (CO), oxides of nitrogen (NO_X), and volatile organic compounds (VOCs, including hydrocarbons (HC)) from nonroad engines and vehicles are significant contributors to ozone or CO in more than one area which has failed to attain the national ambient air quality standards (NAAQS) for ozone or CO; and (3) if nonroad emissions are determined to be significant, regulate those categories or classes of new

[1] In this notice, the term ''land-based nonroad'' and ''nonroad'' refers to the land-based CI engines and equipment regulated under 40 CFR part 89. It does not include locomotive engines.

[2] *See* 62 FR 54694 (October 21, 1997) and 62 FR 50152 (September 24, 1997).

[3] A copy of MARPOL 73/78 Annex VI and the associated NO_X Technical Code is available in this docket.

nonroad engines and vehicles that cause or contribute to such air pollution.

The Nonroad Engine and Vehicle Emission Study required by section 213(a)(1) was completed in November 1991.[4] The determination of the significance of emissions from nonroad engines and vehicles in more than one NAAQS nonattainment area was published on June 17, 1994.[5] At the same time, the first set of regulations for new land-based nonroad CI engines at or above 37 kW was promulgated.[6] These are often referred to as the nonroad Tier 1 standards for large CI engines. EPA has also issued proposed or final rules for other categories of nonroad engines, including gasoline engines less than 19 kW,[7] gasoline marine engines (outboards and personal watercraft),[8] and locomotives.[9] Today's action pertains to all diesel marine engines greater than 37 kW.

C. Regulatory Background

The marine engine industry consists of a complex set of entities that manufacture a wide variety of engines. The primary entities involved include engine manufacturers, which produce marine versions of their land-based nonroad engines, and post-manufacturer marinizers, which purchase engines in various stages of completion and adapt them for operation in the marine environment. Engine sizes range from very small engines used for auxiliary purposes onboard vessels or to propel sailboats to very large engines used to propel ocean-going cargo ships. However, as more fully described below, these engines can be categorized into three basic types: those that are derived from or that use land-based nonroad technologies; those that are derived from or that use locomotive technologies; and those that are designed for propulsion on very large ocean-going vessels.

Numerical emission standards for CI marine engines were originally proposed in 1994 as part of the proposed rule for control of emissions from new SI and CI marine engines.[10] At that time, EPA had a limited understanding of the CI marine industry and, relying on the similarities between nonroad and CI marine engines, proposed to apply the same emission levels as those in the then just-developed land-based nonroad rule. The nonroad Tier 1 standards are set out in Table 1. EPA proposed that these standards for CI marine engines become effective January 1, 1999 for engines less than 560 kW, and January 1, 2000, for engines 560 KW and above. Although no upper limits on engine size were proposed for application of these standards to CI marine engines, EPA requested comment on whether an upper limit should be established above which the emission control program being developed concurrently by the International Maritime Organization (Annex VI, Air Pollution to the International Convention on the Prevention of Pollution from Ships, MARPOL 73/78) should apply. Annex VI contains, among other provisions,[11] requirements to limit NO_X emissions from diesel marine engines, but sets no limits for other pollutants (*i.e.*, HC, CO, PM). Negotiations were concluded September 26, 1997, and a final version of the Annex was signed by participating IMO member nations, including the U.S. delegation. The Annex in its entirety will acquire the force of law in the United States only after it is ratified by Congress. Table 1 also contains the IMO's NO_X limits, which are intended to apply to new engines greater than 130 kW installed on vessels constructed on or after January 1, 2000, or which undergo a major conversion after that date.

TABLE 1.—COMPARISON OF PROPOSED NUMERICAL EMISSION LIMITS—EPA AND IMO

Agency	Engine speed	HC (g/kW-hr)	CO (g/kW-hr)	NO_x (g/kW-hr)	PM (g/kW-hr)
EPA (Nonroad Tier 1)	all	1.3	11.4	9.2	0.54
IMO	n <130 rpm	None	None	17.0	None.
	130 rpm≤n<2000 rpm	None	None	45*n ($^{-0.2}$)	None.
	n ≥ 2000	None	None	9.8	None.

In response to the NPRM, several commenters requested that EPA harmonize domestic emission standards for CI marine engines to the levels being considered by IMO, in effect applying the proposed IMO limits domestically. Because the proposed IMO standards were not as stringent as the proposed domestic standards, this was a significant issue. On February 7, 1996, EPA published a Supplemental NPRM to address this and other concerns in more detail.[12] Specifically, EPA identified and requested comment on three alternative harmonization approaches: (1) Adopt the IMO NOx emission standard instead of the standard proposed in the NPRM; (2) retain the proposed average NOx emission standard of 9.2 g/kW-hr and also adopt the IMO emission standards across the engine speed range as a cap which no engine could exceed; or (3) determine an appropriate engine speed or engine power output cutoff point such that engines of high horsepower and low and medium speeds would be subject to IMO emission limits and engines of low horsepower and high speed would be subject to the proposed 9.2 g/kW-hr average standard with the 9.8 g/kW-hr IMO level as a cap which no engine could exceed. EPA also sought comment on harmonizing the numerical emission limits for other pollutants. Options considered were to drop, retain, or alter the proposed standards for HC, CO, PM, and smoke.

While the development of the national marine rule and the MARPOL negotiations continued, EPA began a new action for land-based nonroad diesel engines as part of a new Agency initiative to reduce national NOx and PM emissions from mobile sources. EPA proposed a rule that would set more stringent standards for land-based nonroad engines and equipment, known as Tier 2 standards (set out in Table 3, below).[13] EPA proposed that these Tier 2 standards come into effect as early as 2001 for some engine categories. That

[4] This study is available in docket A–92–28.

[5] See 59 FR 31306.

[6] See 59 FR 31306 (June 17, 1994).

[7] See 60 FR 34582 (July 3, 1995) for the final rule establishing Tier 1 standards and 62 FR 14740 (March 27, 1997) for the ANPRM discussing Tier 2 standards.

[8] See 61 FR 52087 (October 4, 1996) for the final rule. EPA did not set numerical emission standards for sterndrive and inboard gasoline marine engines in this rule.

[9] See 62 FR 6365 (February 11, 1997); the final rule was signed December 17, 1997 and is available electronically (see Section VI below).

[10] See 59 FR 55929 (November 9, 1994).

[11] Other provisions include requirements for ozone-depleting substances, sulfur content of fuel, incineration, VOCs from refueling, and fuel quality.

[12] See 61 FR 4600 (February 7, 1996).

[13] See 62 FR 50152 (September 24, 1997).

proposed rule also included more stringent Tier 3 standards (also set out in table 3), which would go into effect subject to a feasibility review in 2001. That feasibility review will be conducted through a public rulemaking process. Finally, marine and land-based nonroad CI engines less than 37 KW were included in the diesel land-based nonroad rule, with standards to come into effect as early as 1999 for Tier 1 and 2004 for Tier 2. Smaller CI marine engines were included in the proposal because they were not subject to any emission limits at the time (the existing marine NPRM covered only CI marine engines at or greater than 37 kW).

Also during this time, and pursuant to its Clean Air Act obligations, EPA proposed a rule that would set emission standards for new locomotive engines, which has since been finalized.[14] The locomotive program consists of three separate sets of standards, with applicability of the standards dependent on the date a locomotive is first manufactured. The first set of standards (Tier 0) applies to locomotives and locomotive engines originally manufactured from 1973 through 2001. The Tier 0 standards will be phased in over a two year period beginning in 2000, and will apply at the time of each remanufacture (as well as at the time of original manufacture for those covered locomotives originally manufactured in 2000 and 2001). The second set of standards (Tier 1) apply to locomotives and locomotive engines originally manufactured from 2002 through 2004. Such locomotives and locomotive engines will be required to meet the Tier 1 standards at the time of original manufacture and at each subsequent remanufacture. The final set of standards (Tier 2) apply to locomotives and locomotive engines originally manufactured in 2005 and later. Such locomotives and locomotive engines will be required to meet the Tier 2 standards at the time of original manufacture and at each subsequent remanufacture. The numerical standards are contained in Table 2.

TABLE 2.—LOCOMOTIVE STANDARDS

[Line-haul only]

Tier	HC (g/kW-hr)	CO (g/kW-hr)	NO_x (g/kW-hr)	PM (g/kW-hr)
Tier 0	1.3	6.7	12.7	0.80
Tier 1	0.7	2.9	9.9	0.6
Tier 2	0.4	2.0	7.4	0.27

EPA's efforts toward new emission limits for land-based nonroad diesel engines and locomotive engines led EPA to reconsider its approach to the control of emissions from CI marine engines. Again, because of the similarities between land-based nonroad and locomotive engines and CI marine engines, EPA is considering a rule based on applying the anticipated new technologies to CI marine engines. As a result, EPA did not take final action on CI marine engines when it adopted standards for marine spark-ignition engines.[15] Instead, EPA is pursuing a separate initiative for marine diesel engines which involves proposing a more ambitious emission control program than those proposed in 1994 and modified in 1996. The remainder of this ANPRM describes the new approach the Agency is considering for regulating emissions from new CI marine engines.

II. General Approach for Emission Control Program

A. Building on Land-Based Nonroad and Locomotive Rulemakings

Because of the similarities between certain CI marine engines and land-based nonroad diesel and locomotive engines, EPA intends to continue the same general approach as described in the earlier NPRM and SNPRM. That is, EPA envisions that the emission control program for CI marine engines at or above 37 kW will in many cases be an outgrowth of and depend on EPA's proposed emission control program for other land-based engines. However, instead of basing the program on the land-based nonroad Tier 1 program, this new proposal will look to the newer Tier 2 and locomotive programs. EPA intends to draw on both of those programs for elements such as numerical standards, compliance program, and manufacturer flexibility provisions. At the same time, EPA recognizes that differences between the engines may make it difficult to apply those programs to CI marine engines. Therefore, EPA seeks comments on all aspects of the basic program outlined below and on the suitability of applying provisions of the land-based and locomotive rulemakings in this context. Interested parties should refer directly to those rules, cited above, for more details on their contents.

B. Program Scope

The emission control program contemplated by today's action is intended to cover all new propulsion or auxiliary compression-ignition engines of 37 kW or greater offered for sale, introduced into commerce, or imported into the United States for installation on a vessel that is registered or flagged in the United States. Engines produced for installation on vessels not registered or flagged in the United States may be covered by an export exemption, as long as those vessels are not operated solely within United States. With regard to size, this rule is intended to cover all new engines from a 37 kW engine used on a small recreational vessel to a 30,000 kW or larger engine installed on an ocean-going container ship. With regard to application, the requirements are intended to cover both recreational and commercial engines. EPA requests comment generally on the proposed scope of the program and, in particular, on its effect on international commerce.

For purposes of this rulemaking, EPA considers a propulsion engine to be an engine that serves to move a vessel through water, either directly or indirectly. Any other engine installed on a vessel is considered to be an auxiliary engine. However, portable auxiliary engines of any size not permanently affixed to a marine vessel (e.g., auxiliary engines that are not permanently installed but, instead, are mounted on pallets that can be easily removed from the vessel) are not intended to be covered by this rule; those engines are subject to the land-based nonroad rule.

C. Emission Standards

1. Need for Multi-Category Approach

The engines to be covered by the emission control program contemplated

[14] See 62 FR 6365 (February 11, 1997); the final rule was signed December 17, 1997, and is available electronically (see section VI below).

[15] See 61 FR 52087 (October 4, 1996).

in today's action are very diverse, in terms of engine size, emission technology, control hardware, and costs associated with reducing emissions. EPA therefore believes that it is not reasonable to propose one set of numerical emission levels for all CI marine engines. Because of the differences among engines, numerical standards that are reasonable and feasible for a 37 kW engine used on an 18-foot boat may not be reasonable or feasible for a 1500 kW engine installed on a tug or a 20,000 kW engine installed on an ocean-going container ship. Similarly, numerical emission limits that are appropriate for very large engines may be too loose for smaller engines, leaving them virtually unregulated. Therefore, EPA is considering setting different numerical standards for different size CI marine engines, as discussed in further detail below. EPA seeks comment on how the categories of engines should be defined. Options for defining the categories include engine power, displacement, bore size, or underlying engine technology.

While it is also possible to consider setting numerical standards based on the use of the vessel (i.e., whether it is used for commercial or recreational purposes), EPA is not considering doing so. Regardless of their ultimate use, CI marine engines of similar size can and do use the same emission control technologies, although they may be calibrated differently for performance reasons. Therefore, there appears to be no need to make such a use-based distinction for purposes of the proposed rulemaking.

2. Category 1: Engines Similar to Land-Based Nonroad

EPA is considering defining as a first category of CI marine engines those engines that are derived from land-based nonroad CI engines or that use similar technologies. As noted above, EPA recently issued an NPRM for control of emissions from land-based nonroad CI engines. Preliminary research confirms that many CI marine engines are derived from land-based nonroad CI engines covered in that NPRM, using the same base engine or engine block as their land-based counterparts and employing the same or similar engine technologies. Therefore, EPA believes that the NOx emission control technologies utilized for nonroad engines can be extended to these marine engines, and concomitantly that the numerical emission levels specified for Tier 2 and Tier 3 land-based nonroad engines are appropriate for CI marine engines. The land-based nonroad standards are set out in Table 3. CI marine engines should be able to achieve these emission limits on the E3 duty cycle (described below in section I.D. of today's ANPRM) by applying technologies under development for land-based nonroad engines, including increased use of turbocharging, better engine cooling, electronic controls, and exhaust gas recirculation. Because of the relationship between land-based and marine engines, the 2001 feasibility review intended for land-based engine standards would be expanded to include a re-evaluation of any Tier 3 standards adopted for marine engines. EPA requests comment on the appropriateness of extending land-based requirements to this category of CI marine engines and on the appropriateness of promulgating Tier 3 standards for marine engines prior to a formal technology review.

TABLE 3.—PROPOSED STANDARDS AND IMPLEMENTATION DATES FOR LAND-BASED NONROAD CI ENGINES RATED OVER 37 KW

Rated power (kW)	Standard level	NMHC+NO_x (g/kW-hr)	CO (g/kW-hr)	PM (g/kW-hr)	Implementation date
37 ≤75	Tier 2	7.5	5.0	0.40	2004
	Tier 3	4.7	5.0	.....	2008
75 ≤130	Tier 2	6.6	5.0	0.30	2003
	Tier 3	4.0	5.0	.....	2007
130 ≤225	Tier 2	6.6	3.5	0.20	2003
	Tier 3	4.0	3.5	.....	2006
225 ≤450	Tier 2	6.4	3.5	0.20	2001
	Tier 3	4.0	3.5	.....	2006
450 ≤560	Tier 2	6.4	3.5	0.20	2002
	Tier 3	4.0	3.5	.....	2006
>560	Tier 2	6.4	3.5	0.20	2006

Table 3 also sets out the proposed implementation dates for land-based nonroad engines. EPA seeks comment on applying these dates to CI marine engines. Specifically, EPA seeks comment on the extent to which implementation should be delayed to provide additional time to work out the marinization of the land-based engine or application of technology to uncontrolled CI marine engines as new standards are implemented. In addition, if such delays are required, EPA seeks comment on the appropriate extension of the schedule.

If the standards described above are directly applied to CI marine engines, one important result would be that engines greater than 560 kW would remain unregulated until 2006. To close this gap, EPA is considering applying interim standards to these engines. One option would be to apply the Tier 1 standards described in Table 1, to go into effect in 2000 as originally proposed in the CI marine NPRM.[16] The other option is to apply the IMO NOx emission limits in the interim. These standards are also scheduled to apply beginning in 2000. EPA seeks comment on the relative merits of these two approaches. If the Tier 1 standards are adopted, EPA does not believe the effective dates should be delayed for CI marine since these emission limits are similar to those of the IMO which will go into effect for engines installed on vessels constructed on or after January 1, 2000.

[16] See 59 FR 55929 (November 9, 1994).

3. Category 2: Engines Similar to Locomotive Engines

EPA is considering defining as a second category of CI marine engines those engines that are derived from locomotive engines or that use similar technologies. These engines are typically used in vessels such as tugs, ferries, and small coastal container or bulk carriers that operate primarily in US waters. Despite their relatively small number, these engines contribute

disproportionately to coastal and port NO_x levels due to the high power ratings, high number of hours they are used, and the way they are used (high load factors).

EPA is considering two ways to address emissions from engines in this category. The first approach would be to apply the NO_x emission limits contained in MARPOL Annex VI, as reflected in the NOx curve. These limits would apply to new engines constructed on or after January 1, 2000. Alternatively, due to their relatively high contribution to the NOx and PM inventories on a per engine basis, more stringent emission limits may be appropriate for these engines. Thus, the second approach would be to apply the numerical emission limits for new locomotive engines to these CI marine engines (see Table 2, above). EPA seeks comment on both of these approaches, and on the extent to which the implementation dates in the locomotive rule should be adjusted to accommodate application of those standards to marine engines.[17]

4. Category 3: Low Speed, High Horsepower Engines

EPA is considering defining as a third category of CI marine engines those low speed, high horsepower engines that are used for propulsion purposes on ocean-going engines or Great Lakes freighters. These engines, which are typically larger than those derived from locomotive engines, are built to unique specifications onboard the vessel, and are manufactured in very small numbers. For such new engines, EPA is considering setting numerical standards for this category consistent with the IMO NO_x curve (see Table 1 above). EPA believes this approach to be reasonable for this category of engines, primarily because of their use patterns. Such engines are used in large vessels that engage in ocean travel and may operate only a limited amount of time in U.S. ports, while they are loading or unloading cargo and/or people. Setting standards more stringent than those adopted by IMO for such engines may accordingly have only a minimal impact on U.S. air quality, especially since the more stringent standards could apply only to engines installed on vessels flagged or registered in the United States. In addition, because more stringent standards would apply only to U.S. vessels, they may also affect the competitiveness of U.S. shipping vessels in the world transportation market, since engines installed on foreign-flagged vessels would need to comply only with the IMO emission limits. EPA seeks comment on the appropriateness of this approach for these very large engines.

With regard to the effective date for Category 3 engines, EPA is considering two approaches. The first reflects the approach typically used by EPA: standards are effective based on the construction date of the engine. Under this approach, EPA would require engines manufactured on or after January 1, 2000 to meet these limits. The second approach reflects the approach typically used by IMO and which is incorporated in MARPOL Annex VI: standards are effective based on the construction date of the vessel on which they are installed. Under this approach, engines installed on vessels constructed on or after January 1, 2000 would be required to meet these limits. The difference between these two approaches is not insignificant, since construction on a vessel may begin up to two years before the engine is manufactured and installed. Thus, using the IMO approach may lead to earlier implementation. EPA seeks comment on the relative merits of either approach.

5. Smoke Standards

In previous diesel engine emission control programs, EPA has typically set smoke standards as well as NO_x and PM emission limits for diesel engines. However, as in the proposed rule for land-based and small marine nonroad engines, EPA does not intend to propose a smoke standard for the CI marine engines subject to this rule. This is primarily because a test procedure to accurately measure smoke levels has not yet been developed for marine engines. While the test for land-based engines could be used, it may be inappropriate because it does not reflect how marine engines are actually operated. In addition, current PM controls for CI engines, as well as customer awareness and demand for smoke-controlled engines, may effectively control smoke from these engines beyond any levels the Agency may reasonably set. EPA seeks comment on the necessity of setting smoke standards.

6. Remanufacturing Requirements

To address the fact that certain types of engines are kept in service for very long periods of time, both the locomotive rule and the IMO's NO_x emission control program contain remanufacturing requirements. The locomotive rule's three tiers of numerical emission limits apply to freshly manufactured[18] and existing engines whenever they are remanufactured to a condition similar to freshly manufactured. The MARPOL Annex VI NO_x curve emission limits apply to new engines and to existing engines when they are substantially modified. Remanufacturing provisions were included in both of these rules because of the slow rate of fleet turnover in these sectors, which prevents the realization of significant emission reductions from these categories of engines until well into the future. EPA seeks comment on the appropriateness of applying these rebuild provisions to Category 2 and 3 engines.

While remanufacturing provisions could be extended to Category 1 engines, EPA is not currently considering doing so for two reasons. First, current industry rebuilding practices for Category 1 engines may make it difficult to implement a remanufacturing program. As noted above, there is a large degree of diversity among these engines, in terms of their applications (e.g., auxiliary/propulsion engines on fishing vessels, barges, tugs, recreational vessels, etc.). This diversity, in turn, is likely to lead to a diverse set of remanufacturing practices, depending on application and engine type. In other words, engines on fishing vessels may not be remanufactured at the same rate as engines on recreational vessels. This diversity may make it difficult to set a uniform process and standard on the Category 1 segment of the marine industry. Second, it is not clear that a remanufacturing requirement for Category 1 engines would yield an emission benefit large enough to offset the potential burden on users, and so may not justify such a requirement. At the same time, EPA is considering extending the proposed land-based nonroad rebuild provisions to Category 1 engines. EPA seeks comment on the characteristics of rebuilding practices for Category 1 engines, the appropriateness of extending a remanufacturing requirement to those engines, and whether a remanufacturing requirement, if extended, should vary according to the intended use of the engine.

D. Duty Cycles

To ensure the benefits of the emission control program, engine manufacturers must certify their engines to the required emission limits using an appropriate duty cycle. The many kinds of duty cycles that exist for marine

[17] See 62 FR 6365 (February 11, 1997); the final rule was signed December 17, 1997, and is available electronically (see section VI below).

[18] In the locomotive rule, EPA defined a new locomotive to include both freshly manufactured, and remanufactured to like-new condition.

engines make it necessary to specify which duty cycle will be used to demonstrate compliance with the specified emission limits. The choice of duty cycle is a function of engine size, engine characteristics, and how the engine is used. EPA is considering separate duty cycles for propulsion and auxiliary applications for each of the three categories of engines described above.

For Category 1 propulsion engines, EPA is considering two duty cycles: the International Standards Organization (ISO) E3 and E5 duty cycles. The E3 cycle is a four-mode steady-state cycle which was developed to represent in-use operation of commercial marine diesel propulsion engines. The E5 duty cycle, which was developed to represent in-use operation of recreational marine diesel engines, is similar to the E3 except that it includes an idle mode and is more heavily weighted towards lower power modes. At this time, EPA is considering proposing to require use of the E3 duty cycle for these engines.[19]

To ease the certification burden associated with this rule, EPA is considering proposing a flexibility to marine engine manufacturers that was proposed in the land-based nonroad rule for CI marine engines less than 37 kW. This provision would allow marine engines to be included in land-based engine families, thus avoiding the necessity of performing a separate certification test for both the land-based nonroad and marine engines. In essence, the flexibility would enable manufacturers to certify propulsion marine engines on ISO's C1 test cycle, which is an 8-mode test designed for variable speed, variable load engines. Although the C1 test procedure may not be as representative of marine operation as the E3 or E5 cycles, it should provide comparable assurance of control. If this flexibility is adopted in the CI marine engine program, the engine manufacturer will not be relieved of the responsibility to ensure that the marine engine in fact meets the emission limits on the E3 test cycle even though it is part of a land-based family. EPA seeks comment on whether this cross-over testing should be allowed.

For Category 3 propulsion engines, EPA is considering applying the duty cycles and procedures contained in the International Maritime Organization's NOx Technical Code.[20] These test cycles are set out in Table 5.

TABLE 5.—DUTY CYCLES—CATEGORY ENGINES

(As set out in Annex VI NOx Technical Code)

Engine	Cycle
Constant-speed marine engines for ship's main propulsion, including diesel electric drive	E2
Variable-pitch propeller sets	E2
Propeller law operated main and propeller law operated auxiliary engines	E3

Finally, for Category 2 propulsion engines, EPA requests comment on whether one of the two approaches described above is appropriate, or whether another duty cycle should be required.

With regard to auxiliary engines of any category, EPA intends to propose the ISO D2 duty cycle for variable-speed engines, which was designed for constant-speed generator sets with an intermittent load. In addition, EPA is considering extending the C1 flexibility described above to marine auxiliary engines. EPA seeks comment on the appropriateness of this cross-over testing for auxiliary engines.

E. Certification and Compliance Requirements

1. Certification

EPA is planning to put into place certification, engine family selection, recordkeeping and reporting requirements similar to those proposed in the nonroad land-based rule. EPA seeks comments on any revisions to these elements that may be necessary in the context of the CI marine engine emission control program, and any alterations that may be required for the different categories of CI marine engines.

2. Averaging, Banking, and Trading

In past federal mobile source rulemakings, EPA has adopted averaging, banking, and trading programs, and each of the programs referred to in today's ANPRM (on-highway[21] and land-based nonroad[22], locomotive[23], and gasoline marine[24] rules) include such programs. EPA requests comment on the need or applicability of such a program to CI marine engines.

3. Interface with IMO

Although EPA does not anticipate any difficulties with the interface between the domestic and IMO certification programs, EPA seeks comment on any problems that could arise.

4. Other Compliance Issues

EPA plans to draw on the compliance program set out in the land-based nonroad NPRM.[25] EPA intends to include selective enforcement auditing and recall provisions, in which engines are tested at the production line or in the field, respectively. EPA also intends to propose emission defect warranty and reporting requirements for marine diesel engines. Tampering prohibitions and importation restrictions will be outlined in the NPRM. EPA requests comment on how to apply these programs to marine diesel engines. Commenters are encouraged to provide detailed discussion of any revisions that may be needed to the land-based nonroad version of these programs to accommodate the marine engine market. EPA seeks comment on applying similar requirements to Category 2 and Category 3 engines, and how such provisions should interface with IMO requirements. In addition, EPA seeks comment on whether the production line testing program contained in the locomotive rule should be extended to Category 1 engines as an alternative to selective enforcement auditing.

F. Other Issues

1. Competitiveness with Spark-Ignition Engines

In response to the original marine NPRM, some commenters argued that CI engines should be subject to no more stringent regulation than gasoline SI sterndrive or inboard engines.[26] According to these commenters, CI

[19] An explanation of EPA's preliminary view on using the E3 duty cycle is set forth in Memorandum to Docket #A–96–40 from Mike Samulski, ''Selection of Duty Cycle to Propose for High Speed CI Marine Engines (February 19, 1997).

[20] A copy of this document is available in this docket.

[21] See 62 FR 54694 (October 21, 1997).

[22] See 62 FR 50152 (September 24, 1997).

[23] See 62 FR 6365 (February 11, 1997).

[24] See 61 FR 52087 (October 4, 1996).

[25] See 62 FR 50152 (September 24, 1997).

[26] See 59 FR 55929 (November 9, 1994).

marine engines compete directly with SI sterndrive and inboard engines in certain markets, particularly for inboard cruisers. As described in the final rule for SI marine engines, EPA determined not to set standards for SI marine sterndrive and inboard engines, and these engines remain unregulated at this time.[27]

EPA understands that manufacturers of inboard cruisers often give customers a choice of purchasing either gasoline or diesel engines for certain types of vessels. However, information obtained from vessel manufacturers indicates that the choice of engine is complex. Customers primarily consider reliability, durability, fuel economy, and power when making their engine choice. In other words, the decision of whether to purchase a gasoline engine or a diesel engine appears to depend mainly on the intended usage patterns of the consumer. Typically, diesel engines are more attractive to customers interested in slow cruising over long distances, while gasoline engines are more attractive to customers interested in certain performance characteristics (e.g., speed). Thus, diesel engines do not appear to compete directly with gasoline engines in that the performance of the engines is not similar and the engines are not completely interchangeable in terms of use.

Current pricing of the engines further supports this argument. Information received by EPA suggests that at nearly the same power rating, the price of diesel engines is estimated to be double that for counterpart gasoline engines, in part due to fabrication requirements. EPA believes that if the two engine types were truly competitive, their prices would be more similar. EPA nevertheless recognizes that diesel and gasoline engines are offered on some of the same or similar vessels, and is therefore requesting additional information on this issue.

2. Voluntary Low-Emitting Engine Program

EPA is interested in adopting voluntary standards involving very low-emitting engine technologies, similar to those proposed in the land-based nonroad engine NPRM. The nonroad ''Blue Sky Series'' program sets out voluntary standards which manufacturers can meet using novel technologies or alternative fuels. The intended goal of adopting voluntary standards is two-fold: to increase the potential for emission reductions and to encourage the development and initial introduction of new technologies. The creation of incentives to produce Blue Sky Series engines would be left to the discretion of states or other organizations. The concentrated use of large marine engines near certain nonattainment areas should motivate consideration of these voluntary low-emission standards for new engines. Retrofit of existing engines may also be appropriate, but would not fall under the Blue Sky Series program.

Voluntary standards for diesel marine engines could be set up to be similar to those proposed for land-based engines, with some important differences. First, as proposed in the land-based nonroad NPRM, Blue Sky Series engines would be certified using the highway transient test. Testing these engines on a transient test cycle is important to ensure adequate control of particulate emissions. Use of the highway test cycle for large CI marine engines would, however, be problematic because of the very different operating modes experienced in use. Voluntary standards for some or all marine diesel engines would therefore need to rely on the ISO CI or another test cycle, with a corresponding shift in focus to reducing NOx emissions. Second, the numerical levels for the voluntary standards proposed in the land-based nonroad NPRM would need to be revised, to reflect the potential for achieving superior emission control from the various sizes of marine engines. Finally, as with the land-based nonroad Blue Sky Series program, manufacturers would not be relieved of the responsibility to demonstrate compliance with the prevailing mandatory standards, although initial certification of such engines could be streamlined.

EPA requests comment on the potential success of a voluntary emission standards program for CI marine engines. EPA further requests comment on the appropriate makeup of a program of voluntary standards for all sizes of CI marine engines, including those subject to the MARPOL Annex VI NOx levels.

III. Potential Impacts

EPA will include detailed analysis of the emissions reductions and air quality benefits that would result from the standards proposed in the NPRM. EPA will also include in the NPRM an analysis of the expected environmental and economic impacts of meeting the proposed emission standards. The estimated economic impacts for land-based nonroad engines to meet proposed standards will be the starting point for a projection of Category 1 engine impacts. EPA expects that manufacturers will comply with diesel marine emission standards by marinizing engines that have been designed for land-based emission standards. Adjustments will be made to account for the unique design and operation of the marinized engines. Cost calculations will include certification and testing costs, as well as a consideration of fuel economy impacts resulting from the anticipated technologies; however, no fuel economy penalty was projected for land-based engines. Cost estimates for Category 2 engines will be similarly derived from the analysis completed for locomotive engines. EPA does not currently contemplate proposing standards more stringent than IMO levels for Category 3 engines and therefore intends not to estimate any cost impact for those engines.

IV. Small Business Concerns

Section 605 of the Regulatory Flexibility Act (RFA), 5 U.S.C. 601 *et seq.* requires the Administrator to assess the economic impact of proposed rules on small entities. The Small Business Regulatory Enforcement Fairness Act (SBREFA) of 1996, Public Law 104–121, amended the RFA to strengthen its analytical and procedural requirements and to ensure that small entities are adequately considered during rule development. The Agency accordingly requests comment on the potential impacts on a small business of the program outlined in today's proposal. Such comments will help the Agency meet its obligations under SBREFA and will suggest how EPA can minimize the impacts of this rule for small companies that may be adversely affected.

EPA has identified three distinct groups of entities involved in the marine industry that could be affected by the emission control program under consideration. The first group, considered by EPA as ''post-manufacturer marinizers,'' are companies that purchase an engine block from an engine manufacturer and modify it in such as way to make it adaptable to the marine environment. As with the SI marine emission standards, these companies would need to certify the marinized engines under the standards contemplated here. Most of these companies would be considered small business entities according to the size standards defined by Small Business Administration (SBA) regulations. Through early outreach efforts, EPA has learned that these small post-manufacturer marinizers may face at least two challenges not faced by large companies. First, they may have to redesign their end product, to

[27] See 61 FR 52087 (October 4, 1996).

incorporate a change made by their engine supplier in response to new emission requirements for CI land-based or marine engines. Second, many if not all of these companies will be facing compliance requirements for the first time. EPA requests comment on the burdens expected to be faced by these companies and potential flexibility provisions that may provide necessary relief. To identify potential flexibility provisions, commenters are encouraged to examine the proposed in the land-based nonroad NPRM.[28]

The second group of companies that may be affected by the proposed program are engine manufacturers that produce a wide variety of on-highway and nonroad engines. As noted above, CI marine engines produced by these manufacturers are typically derived from land-based nonroad or on-highway engines or are based on the same technology. Because these engine manufacturers have control over the manufacturing process for the base on-high or nonroad engine, they also have more control than the post-manufacturer marinizers over the internal design of the marine engines they market as well as more flexibility over the marinizing process. Typically, these engine manufacturers are considered large according to the SBA size standards. EPA requests comment on the degree to which these larger CI marine engine manufacturers will be affected by the proposed emission control program and, more specifically, the extent to which it would be appropriate to include flexibility provisions for these manufacturers.

The final group of companies that may be affected by the proposed program are vessel manufacturers. They may be affected to the extent that they need to accommodate changed engine designs from their engine suppliers. EPA expects that most of the application of emission control technology to achieve proposed emission limits will not affect vessel design. EPA seeks comment from vessel manufacturers and others on the potential impact on vessel design, as well as the appropriateness of equipment manufacturer flexibilities.

V. Public Participation

The Agency is committed to a full and open regulatory process and looks forward to input from a wide range of interested parties as the rulemaking process develops. If EPA proceeds as expected with a proposed rule, these opportunities will include a formal public comment period and a public hearing. EPA encourages all interested parties to become involved in this process as it develops.

With today's action, EPA opens a comment period for this ANPRM. Comments will be accepted through June 22, 1998. The Agency strongly encourages comment on all aspects of this proposal. The most useful comments are those supported by appropriate and detailed rationales, data, and analyses. All comments, with the exception of proprietary information, should be directed to the EPA Air Docket Section, Docket No. A–97–50 before the date specified above. Commenters who wish to submit proprietary information for consideration should clearly separate such information from other comments by (1) labeling proprietary information ''Confidential Business Information'' and (2) sending proprietary information directly to the contact person listed (see **FOR FURTHER INFORMATION CONTACT**) and not to the public docket. This will help ensure that proprietary information is not inadvertently placed in the docket. If a commenter wants EPA to use a submission of confidential information as part of the basis for an NPRM, then a nonconfidential version of the document that summarizes the key data or information should be sent to the docket.

Information covered by a claim of confidentiality will be disclosed by EPA only to the extent allowed and in accordance with the procedures set forth in 40 CFR part 2. If no claim of confidentiality accompanies the submission when it is received by EPA, it will be made available to the public without further notice to the commenter.

VI. Copies of Documents

This ANPRM is available in the public docket as described under **ADDRESSES** above. This document is also available electronically from the EPA internet Web site. This service is free of charge, except for any cost incurred for internet connectivity. The electronic **Federal Register** version is made available on the day of publication on the first Web site listed below. The EPA Office of Mobile Sources also publishes these notices on the second Web site listed below.

Internet (Web)

http://www.epa.gov/EPA-AIR/

(either select desired date or use Search feature)

http://www.epa.gov/OMSWWW/

(look in What's New or under the specific rulemaking topic)

Please note that due to differences between the software used to develop the document and the software into which the document may be downloaded, minor changes in format, pagination, etc. may occur.

VII. Unfunded Mandates Reform Act

Under section 202 of the Unfunded Mandates Reform Act of 1995 (UMRA), Public Law 104–4, EPA must prepare a budgetary impact statement to accompany any general notice of proposed rulemaking or final rule that includes a Federal mandate which may result in estimated costs to State, local, or tribal governments in the aggregate, or to the private sector, of $100 million or more. Under section 205, for any rule subject to section 202 EPA generally must select the least costly, most cost-effective, or least burdensome alternative that achieves the objectives of the rule and is consistent with statutory requirements. Under section 203, before establishing any regulatory requirements that may significantly or uniquely affect small governments, EPA must take steps to inform and advise small governments of the requirements and enable them to provide input.

EPA has determined that the requirements of UMRA do not extend to advance notices of proposed rulemaking such as this Advance Notice.

VIII. Administrative Designation and Regulatory Analysis

Under Executive Order (EO) 12866, the Agency must determine whether this regulatory action is ''significant'' and therefore subject to Office of Management and Budget (OMB) review and the requirements of the Executive Order.[29] The EO defines ''significant regulatory action'' as any regulatory action (including an advanced notice of proposed rulemaking) that is likely to result in a rule that may:

(1) Have an annual effect on the economy of $100 million or more or adversely affect in a material way the economy, a sector of the economy, productivity, competition, jobs, the environment, public health or safety, or State, local, or tribal governments or communities;

(2) Create a serious inconsistency or otherwise interfere with an action taken or planned by another agency;

(3) Materially alter the budgetary impact of entitlements, grants, user fees, or loan programs or the rights and obligations of recipients thereof; or,

(4) Raise novel legal or policy issues arising out of legal mandates, the President's priorities, or the principles set forth in the Executive Order.

A draft of this ANPRM was reviewed by OMB prior to publication, as

[28] See 62 FR 50152 (September 24, 1997).

[29] See 58 FR 51735 (October 4, 1993).

required by EO 12866. Any written comments from OMB and any EPA response to OMB comments have been placed in the public docket for this Notice.

List of Subjects in 40 CFR Part 89

Environmental protection, Administrative practice and procedure, Air pollution control, Confidential business information, Imports, Incorporation by reference, Labeling, Nonroad source pollution, Reporting and recordkeeping requirements.

Dated: May 11, 1998.

Carol M. Browner,

Administrator.

[FR Doc. 98–13791 Filed 5–21–98; 8:45 am]

BILLING CODE 6560–50–P

ENVIRONMENTAL PROTECTION AGENCY

40 CFR Part 300

[FRL–6101–2]

National Oil and Hazardous Substances Contingency Plan; National Priorities List

AGENCY: Environmental Protection Agency.

ACTION: Notice of intent to delete Operable Units 100–IU–1 and 100-IU–3 of the Hanford 100 Area Superfund Site from the National Priorities List.

SUMMARY: The Environmental Protection Agency (EPA) Region 10 announces its intent to delete portions of the Hanford 100 Area NPL Superfund Site. The portions proposed to be deleted are the 100–IU–1 and 100–IU–3 Operable Units from the National Priories List. The 100–IU–1 and IU–3 Operable Units are part of the Hanford 100 Area NPL Site located at the U.S. Department of Energy (DOE) Hanford Site, located in southeastern Washington State. EPA is requesting comment on this action.

The NPL constitutes Appendix B to the National Oil and Hazardous Substances Pollution Contingency Plan (NCP), 40 CFR Part 300, which EPA promulgated pursuant to Section 105 of the Comprehensive Environmental Response, Compensation, and Liability Act (CERCLA). This partial deletion of the 100–IU–1 and 100–IU–3 Operable Units is proposed in accordance with 40 CFR 300.425(e) and the Notice of Policy Change: Partial Deletion of Sites Listed on the National Priorities List. 60 FR 55466 (Nov. 1995).

This proposal for partial deletion pertains to all known waste areas located in the 100–IU–1 and 100–IU–3 Operable Units. The waste areas in 100-IU–3 were associated with former military sites used to defend the Hanford Site during the Cold War. In addition, a 2–4,D burial ground is located in the 100–IU–3 Operable Unit. The primary waste areas in the 100–IU–1 Operable Unit were associated with decontamination of rail cars at the Riverland Railroad Car Wash Pit, a munitions cache, a pesticide container area, and a 2–4,D container area.

DATES: EPA will accept comments concerning its proposal for partial deletion for thirty (30) days after publication of this document in the **Federal Register** and a newspaper of record.

ADDRESSES: Comments may be sent to: Dennis Faulk, Superfund Site Manager, USEPA, 712 Swift #5, Richland, Washington 99352; (509) 376–8631.

Information Repositories: Information and the deletion docket is available for review at the information repository listed below:

U.S. Department of Energy, Public Reading Room, Washington State University, Tri-Cities Consolidated Information Center, Room 101L, 2770 University Drive, Richland, Washington 99352.

In addition, the Notice of Intent to Delete can be reviewed at the following information repositories: Portland State University, Branford Price Millar Library, Science and Engineering Floor, 934 SW Harrison and Park, Portland, Oregon; University of Washington, Suzzallo Library, Government Publications Room, Seattle, Washington; Gonzaga University, Foley Center, East 502 Boone, Spokane, Washington.

FOR FURTHER INFORMATION CONTACT: Dennis Faulk; (509)376–8631.

SUPPLEMENTARY INFORMATION:

Table of Contents

I. Introduction
II. NPL Deletion Criteria
III. Deletion Procedures
IV. Basis for Intended Partial Site Deletion

I. Introduction

The United States Environmental Protection Agency (EPA) Region 10 announces its intent to delete the 100–IU–1 and 100–IU–3 Operable Units from the National Priories List. The 100–IU–1 and IU–3 Operable Units are part of the Hanford 100 Area NPL Site located at The U.S. Department of Energy(DOE) Hanford Site, located in southeastern Washington State. EPA is requesting comment on this action.

EPA proposes to delete the 100–IU–1 and 100–IU–3 Operable Units from the 100 Area NPL because all appropriate CERCLA response activities have been completed. The waste areas in the 100–IU–1 and 100–IU–3 Operable Units were cleaned up by the DOE between 1992 and 1994 using expedited response actions (ERA). At the Hanford Site, the term ERA is used to describe actions taken under CERCLA removal authority as described in 40 CFR 300.415. In February 1996, a no further action record of decision was signed documenting that previous ERA's had removed all contaminants from the waste areas in the 100–IU–1 and 100–IU–3 Operable Units to below cleanup levels for residential use established under the Washington State Model Toxics Control Act (MTCA). It should be noted, cleanup activities are continuing at other operable units of the Hanford 100 Area NPL Site.

The NPL is a list maintained by EPA of sites that EPA has determined present a significant risk to human health, welfare, or the environment. Sites on the NPL may be the subject of remedial actions financed by the Hazardous Substance Superfund (Fund). Pursuant to 40 CFR 300.425(e) of the NCP, any site or portion of a site deleted from the NPL remains eligible for remedial actions if conditions at the site warrant such action.

EPA will accept comments concerning its intent for partial deletion for thirty (30) days after publication of this notice in the **Federal Register** and a newspaper of record.

II. NPL Deletion Criteria

The NCP establishes the criteria that EPA uses to delete sites from the NPL. In accordance with 40 CFR 300.425(e), sites may be deleted from the NPL where no further response is appropriate to protect human health or the environment. In making such a determination pursuant to § 300.425(e), EPA will consider, in consultation with the State, whether any of the following criteria have been met:

Section 300.425(e)(1)(I). Responsible parties or other persons have implemented all appropriate response actions required; or

Section 300.425(e)(1)(ii). All appropriate response actions under CERCLA have been implemented under DOE's removal authority, and no further response action is deemed necessary; or

Section 300.425(e)(1)(iii). The remedial investigation has shown that the release poses no significant threat to human health or the environment and, therefore, taking of remedial measures is not appropriate.

Deletion of a portion of a site from the NPL does not preclude eligibility for subsequent remedial actions at the area deleted if future site conditions warrant

such actions. Section 300.425(e)(3) of the NCP provides that remedial actions may be taken at sites that have been deleted from the NPL. A partial deletion of a site from the NPL does not affect or impede EPA's ability to conduct CERCLA response activities at areas not deleted and remaining on the NPL. In addition, deletion of a portion of a site from the NPL does not affect the liability of responsible parties or impede agency efforts to recover costs associated with response efforts.

III. Deletion Procedures

Deletion of a portion of a site from the NPL does not itself create, alter, or revoke any person's rights or obligations. The NPL is designed primarily for information purposes and to assist Agency management.

The following procedures were used for the proposed deletion of the 100–IU–1 and 100–IU–3 Operable Units:

(1) EPA Region 10 has recommended the partial deletion and has prepared the relevant documents.

(2) The State of Washington, through the Washington Department of Ecology, concurs with this proposed partial deletion.

(3) Concurrent with this national Notice of Intent for Partial Deletion, a notice has been published in a newspaper of record and has been distributed to appropriate federal, State, and local officials and other interested parties. These notices announce a thirty (30) day public comment period on the deletion package, which commences on the date of publication of this notice in the **Federal Register** and newspaper of record.

(4) EPA has made all relevant documents available at the information repositories listed previously.

This **Federal Register** document, and a concurrent notice in a newspaper of record, announce the initiation of a thirty (30) day public comment period and the availability of the Notice of Intent of Partial Deletion. The public is asked to comment on EPA's proposal to delete the operable units from the NPL. All critical documents needed to evaluate EPA's decision are included in the Deletion Docket and are available for review at the information repository previously listed.

Upon completion of the thirty (30) day public comment period, EPA will evaluate all comments received before issuing the final decision on the partial deletion. EPA will prepare a Responsiveness Summary for comments received during the public comment period and will address concerns presented in the comments. The Responsiveness Summary will be made available to the public at the information repository previously listed. Members of the public are encouraged to contact EPA Region 10 to obtain a copy of the Responsiveness Summary. If, after review of all public comments, EPA determines that the partial deletion from the NPL is appropriate, EPA will publish a final notice of partial deletion in the **Federal Register**. Deletion of the operable units does not actually occur until the final Notice of Partial Deletion is published in the **Federal Register**.

IV. Basis for Intended Partial Site Deletion

The following provides EPA's rationale for deletion of the 100–IU–1 and 100–IU–3 Operable Units of the Hanford 100 Area NPL Site and EPA's finding that the criteria in 40 CFR 300.425(e) are satisfied.

Background

The Hanford 100 Area Site was added to the NPL in November 1989. EPA Region 10 is proposing deletion of portions of the Hanford 100 Area NPL Site. Specifically the 100–IU–1 Operable Unit and 100–IU–3 Operable Unit. The 100–IU–1 Operable Unit is a 13 square mile area with boundaries of Washington State Route 240 on the east, Washington State Highway 24 on the south, Hanford Site boundary on the west, and the Columbia River on the north. The 100–IU–3 Operable Unit is a 140 square mile area located at the northern most extent of the Hanford 100 Area NPL Site, north of the Columbia River.

100–IU–1 Operable Unit

Based on past disposal practices two waste areas; the Army Munitions Burial Site (munitions cache) and the Riverland Railroad Car Wash Pit were included as subunits in the 100–IU–1 Operable Unit. In addition, during investigations a pesticide container disposal area and a 2–4,D container area were also discovered and included as part of the operable unit.

The Riverland Railroad Car Wash Pit operated from 1943 until 1956 and was used to decontaminate railcars. Radioactive decontamination was required before railroad maintenance personnel could work on the railcars and locomotives.

An operable unit visual inspection found one homestead area containing a pile of empty pesticide containers. Characterization activities identified aldrin and dieldrin as contaminants of concern in the soil. Aldrin and dieldrin are carcinogenic and relatively immobile in soils. The chemicals were produced for about 10 years, from the early 1950s to early 1960s.

A 2–4,D container area was discovered in July 1994 during an archaeological survey performed by Pacific Northwest Laboratories. Two 5-gallon containers were found on the surface among some sage brush. In addition, nine 5-gallon containers, with just the pour spouts exposed, were found buried among the sage brush. Partial container markings indicated that the containers may have contained 2–4,D.

The munitions cache received various military explosives in the 1970s. The explosives were remnants left from various military exercises in the area. The area consisted of a wooden box placed in a hole in the ground about 0.6 m by 0.9 m by 0.6 m (2 ft by 3 ft by 2 ft) deep. On May 22, 1986, the box with contents went to the Yakima Firing Range for destruction.

Characterization activities confirmed the presence of diesel fuel contamination in the concrete and soil at the Riverland Railroad Car Wash Pit and pesticide soil contamination at the pesticide container area. Characterization of the 2–4,D container area did not find any contaminated soil around or beneath the containers. Based on results of sampling at the 2–4,D container area, the empty containers were designated nonregulated. At the pesticide container area, sampling indicated the primary hazardous constituents of concern were aldrin and dieldrin contaminated soils. The munitions cache was sampled and no contamination was present.

There is no known groundwater contamination associated with the 100–IU–1 Operable Unit. There are two shallow depth groundwater monitoring wells within the Operable Unit. One well is located down gradient of the Riverland Railroad Car Wash Pit and the second well is located down gradient and to the northwest. Sample analysis data from as far back as 1971 do not show groundwater contamination.

EPA and Ecology issued an action memorandum to DOE in June, 1993 requiring the removal of all pesticide contaminated soils, filling in the munitions cache hole, performing an explosive ordnance survey, and cleaning up the diesel contaminated concrete and soils at the Riverland Railroad Car Wash Pit.

The munitions cache hole was filled in on July 27, 1993. The Riverland Ordnance Survey was part of the Hanford Site-wide ordnance and explosive waste (OEW) archive search conducted by the U. S. Army Corps of Engineers. This search indicated that

the potential for ordnance in 100–IU–1 was minimal and, therefore, no further action was required regarding ordnance.

The pesticide container area cleanup activities started on July 6, 1993. On-site immunoassay field screening was used to monitor cleanup activity success. Drums containing crushed pesticide containers and drums containing aldrin and dieldrin contaminated soils were sent to an appropriate disposal facility located in the 200 Area of Hanford. The pesticide area was backfilled on September 1, 1993 after laboratory sample results confirmed that the soil contamination levels were below 2 parts per million (pmm) which is the cleanup level for aldrin and dieldrin as specified by the MTCA.

The Riverland Railroad Wash Car Pit cleanup activities started on July 12, 1993 when the soil covering the shop concrete pad was removed. The entire cleanup action was monitored with immunoassay field screening kits that detected diesel (TPH) concentrations at or above 200 ppm. Demolition of the concrete pad began on September 21, 1993 and diesel contaminated soil removal started on September 27, 1993. The contaminated material consisted of soils beneath the concrete pad, clay drain pipes and associated soils, and drainage ditch soils. A total of 430 cubic yards of material were removed and hauled to a bioremediation facility onsite. Bioremediation activities were completed in 1996. Sample results indicated that all soils were below the MTCA cleanup level of 200 ppm for TPH. All excavations were backfilled with clean soil.

100–IU–3

In April of 1992, Ecology and the EPA recommended that the 100–IU–3 Operable Unit be investigated and remediated using a non-time critical ERA. Results of field work which commenced in the summer of 1992 indicated that full scale hazard mitigation and the proper abandonment of water wells needed to be performed. Field work also indicated investigation and remediation of the 100–IU–3 military landfills was warranted. The H–O6–L landfill, considered to be the largest and suspected to contain the most hazardous waste, would be fully characterized (i.e., anomalous areas identified within the landfill boundaries would be fully excavated to undisturbed or natural horizons; excavated materials would be field screened, sampled and analyzed if necessary). Materials identified as hazardous or regulated would be stockpiled for treatment or off-site disposal.

Additional characterization and remediation of the other landfills would be dependent on the amounts and types of wastes found at the H–O6–L landfill. It was reasoned that because the military areas were under the same command, similar operating practices would be in place for each. Therefore, using an analogous approach, environmental waste found at the H–O6–L landfill would be expected to be present at the other landfills. Similarly, if no environmental waste was discovered at the H–O6–L landfill, the expectation was that the other landfills would also be free of contamination.

The Action Memorandum also required that DOE investigate the possible presence of ordnance in the 100–IU–3 Operable Unit. Ordnance, if found, was to be handled and disposed of in accordance with current U.S. Army regulations. An ordnance and explosive waste (OEW) record search was initiated in November of 1993. The search consisted of a records review and site visit, ordnance and explosive waste contamination analysis, and an archives search. The search concluded that there is a very small potential for the presence of OEW. Given the expanse of the 100–IU–3 Operable Unit, the likelihood of finding any ordnance through a field search would be minimal, and the costs would be great. Therefore, no further action was recommended.

Decommissioning of water wells began in June 1994 and was concluded in October 1994. In all, 9 water supply wells and one monitoring well were decommissioned in accordance with requirements set forth by the Washington State Department of Ecology. Localized contamination was discovered in three 100–IU–3 Operable Unit water supply wells. The contamination appeared to have been a result of vandals dumping oil and other debris down the well casing. In each case the contamination was contained within the casing. The oil and contaminated water were successfully purged from each well and the casings were steamed cleaned. Follow up water sampling and testing was conducted to confirm cleanup.

Full characterization and remediation at the H–06–L landfill began on April 19, 1994. Activities conducted consisted of geophysical investigations, excavation and field screening of buried wastes, sampling and analysis of suspect wastes, and segregation of confirmed hazardous or contaminated materials. Geophysical investigations employed electromagnetic profiling and magnetic techniques to locate buried metallic and non-metallic waste materials. Areas exhibiting anomalous geophysical response were marked in the field for subsequent excavation.

Excavated wastes were field screened using several criteria including visual observation, direct-reading instruments, and analyte-specific field analytical kits. Suspect wastes were sampled for characterization by an off-site laboratory under a quick turn-around schedule. Materials confirmed as hazardous were segregated pending determination of proper waste designation and disposition. Excavations were backfilled with clean material and graded to original conditions.

Approximately 600 cubic yards of DDT contaminated soil were discovered at the H–O6–L landfill. This material was disposed of at an off-site permitted landfill. Also, 200 cubic yards of petroleum contaminated soil was found and disposed of at an approved off-site facility. Six drums of soil contaminated with metals and soil from beneath several pesticide cans were disposed at an off-site facility. No ordnance or explosive waste was discovered.

The remaining 100–IU–3 military landfills received limited characterization and remediation that required excavation at each identified geophysical anomaly. Full excavations would only be required when field screening indicated the possible presence of contaminants. Characterization and remediation of 100–IU–3 landfills concluded on August 11, 1994.

In July of 1994, four exploratory holes were drilled under the buried tanks at the 2,4-D burial ground. The tanks were first located using a magnetometer. The holes were drilled at an incline in order to obtain samples from directly beneath the tanks. Eighteen samples were taken and no samples detected 2,4-D. In 1997, new information led to a re-investigation of the 2,4-D burial ground. Laboratory data showed elevated levels of 2,4-D and dioxin. The site was excavated and soils containing 2, 4-D and dioxin were shipped off-site for disposal. A portion of the soil was contaminated with 2,4-D only and was bioremediated onsite.

Community Involvement

Public participation activities for the cleanup of the 100–IU–1 and 100–IU–3 Operable Units were conducted as required under CERCLA Section 113(k), 42 U.S.C. 9613(k) and Section 117, 42 U.S.C. 9617. Public review included the following activities:

Public comment on the removal cleanup plan for 100–IU–1 from May 3 through June 9, 1993.

Public comment was accepted from November 8, 1993 through January 8,

1994 for the 100–IU–3 removal cleanup plan. A public meeting was held in Mattawa, Washington on December 14, 1993 for the 100–IU–3 Operable Unit.

Public comment was held from June 25 through August 9, 1995 regarding the proposed plan for 100–IU–1 and 100–IU–3 Operable Units.

Current Status

In February 1996, a no further action record of decision was signed documenting that previous removal actions done in 1993 and 1994 removed all contaminants to below the Washington Administrative Code (WAC), WAC 173–340 Washington State Model Toxics Control Act (MTCA) and that these areas do not pose a threat to human health or the environment.

The State of Washington, through the Department of Ecology, concurs with EPA's final determination regarding this proposed partial deletion.

Dated: May 15, 1998.

Charles E. Findley,

Acting Regional Administrator, Region 10, Environmental Protection Agency.

BILLING CODE 6560–50–P

Appendix—Map of USDOE Hanford 100 Area

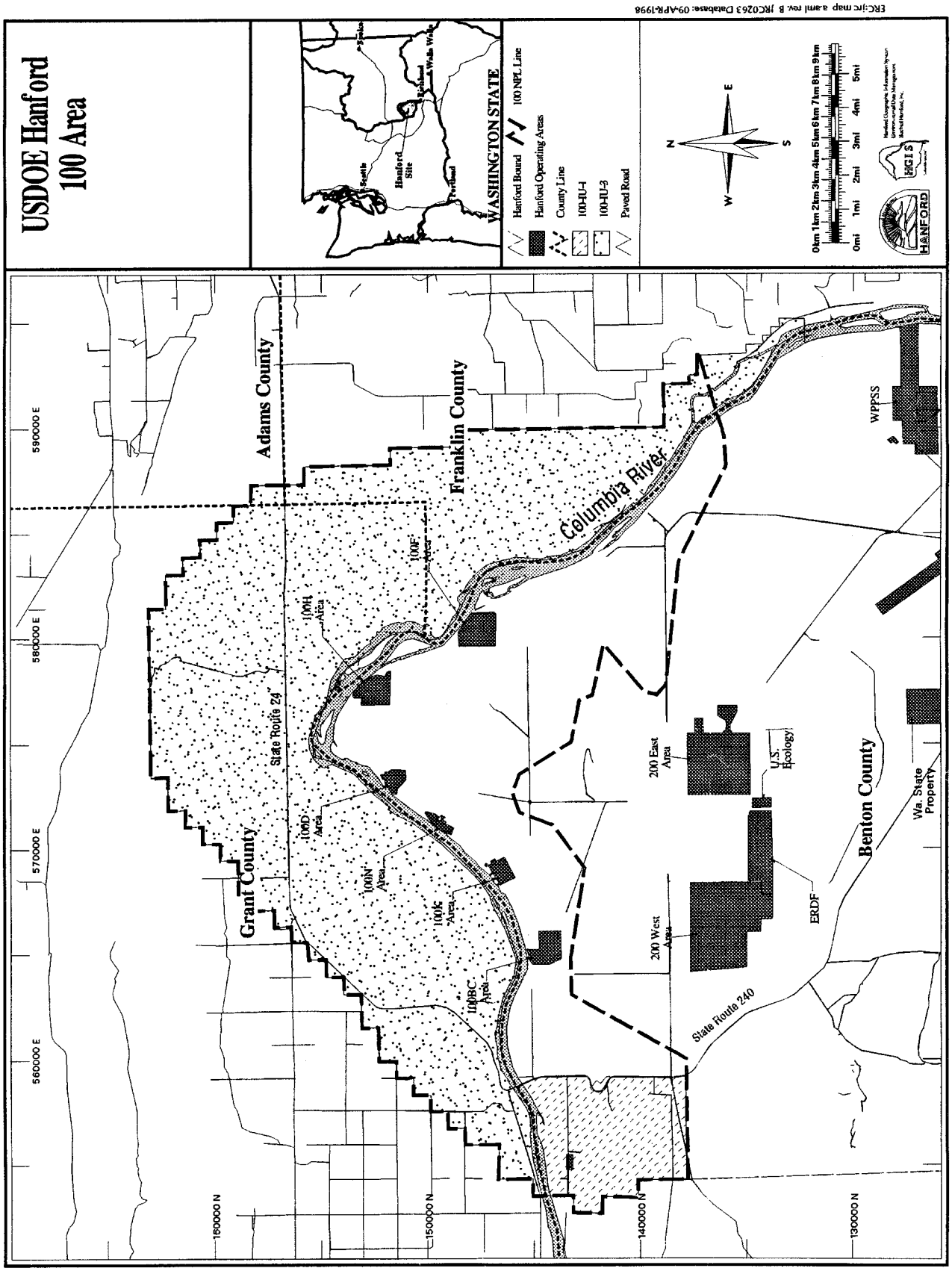

[FR Doc. 98–13602 Filed 5–21–98; 8:45 am]
BILLING CODE 6560–50–C

FEDERAL EMERGENCY MANAGEMENT AGENCY

44 CFR Part 67

[Docket No. FEMA–7246]

Proposed Flood Elevation Determinations

AGENCY: Federal Emergency Management Agency (FEMA).

ACTION: Proposed rule.

SUMMARY: Technical information or comments are requested on the proposed base (1% annual chance) flood elevations and proposed base flood elevation modifications for the communities listed below. The base flood elevations and modified base flood elevations are the basis for the floodplain management measures that the community is required either to adopt or to show evidence of being already in effect in order to qualify or remain qualified for participation in the National Flood InsuranceProgram (NFIP).

DATES: The comment period is ninety (90) days following the second publication of this proposed rule in a newspaper of local circulation in each community.

ADDRESSES: The proposed base flood elevations for each community are available for inspection at the office of the Chief Executive Officer of each community. The respective addresses are listed in the following table.

FOR FURTHER INFORMATION CONTACT: Matthew B. Miller, P.E., Chief, Hazards Study Branch, Mitigation Directorate, 500 C Street SW., Washington, DC 20472, (202) 646–3461.

SUPPLEMENTARY INFORMATION: The Federal Emergency Management Agency proposes to make determinations of base flood elevations and modified base flood elevations for each community listed below, in accordance with Section 110 of the Flood Disaster Protection Act of 1973, 42 U.S.C. 4104, and 44 CFR 67.4(a).

These proposed base flood and modified base flood elevations, together with the floodplain management criteria required by 44 CFR 60.3, are the minimum that are required. They should not be construed to mean that the community must change any existing ordinances that are more stringent in their floodplain management requirements. The community may at any time enact stricter requirements of its own, or pursuant to policies established by other Federal, State, or regional entities. These proposed elevations are used to meet the floodplain management requirements of the NFIP and are also used to calculate the appropriate flood insurance premium rates for new buildings built after these elevations are made final, and for the contents in these buildings.

National Environmental Policy Act

This proposed rule is categorically excluded from the requirements of 44 CFR Part 10, Environmental Consideration. No environmental impact assessment has been prepared.

Regulatory Flexibility Act

The Associate Director for Mitigation certifies that this proposed rule is exempt from the requirements of the Regulatory Flexibility Act because proposed or modified base flood elevations are required by the Flood Disaster Protection Act of 1973, 42 U.S.C. 4104, and are required to establish and maintain community eligibility in the NFIP. No regulatory flexibility analysis has been prepared.

Regulatory Classification

This proposed rule is not a significant regulatory action under the criteria of Section 3(f) of Executive Order 12866 of September 30, 1993, Regulatory Planning and Review, 58 FR 51735.

Executive Order 12612, Federalism

This proposed rule involves no policies that have federalism implications under Executive Order 12612,Federalism, dated October 26, 1987.

Executive Order 12778, Civil Justice Reform

This proposed rule meets the applicable standards of Section 2(b)(2) of Executive Order 12778.

List of Subjects in 44 CFR Part 67

Administrative practice and procedure, Flood insurance, Reporting and recordkeeping requirements.

Accordingly, 44 CFR Part 67 is proposed to be amended as follows:

PART 67—[AMENDED]

1. The authority citation for part 67 continues to read as follows:

Authority: 42 U.S.C. 4001 *et seq.*; Reorganization Plan No. 3 of 1978, 3 CFR, 1978 Comp., p. 329; E.O. 12127, 44 FR 19367, 3 CFR, 1979 Comp., p. 376.

§ 67.4 [Amended]

2. The tables published under the authority of § 67.4 are proposed to be amended as follows:

State	City/town/county	Source of flooding	Location	#Depth in feet above ground. *Elevation in feet. (NGVD)	
				Existing	Modified
Arizona	Quartzsite (Town) La Paz County.	Tyson Wash	Approximately 2,500 feet downstream of Tyson Drive.	None	*816
			Approximately 1,100 feet upstream of Tyson Drive.	None	*836
		Plymouth Wash	Approximately 500 feet upstream of confluence with Tyson Wash.	None	*830
			Just downstream of Plymouth Wash	None	*877
		Plomosa Wash	Approximately 750 feet upstream of confluence with Tyson Wash.	*851	*852
			Approximately 1,500 feet upstream of Plymouth Road.	None	*901
		La Cholla Wash-Main Branch.	At confluence with Tyson Wash	*838	*840
			Approximately 5,900 feet upstream of Kofa Road.	None	*917
		La Cholla Wash-North Branch.	Approximately 1,200 feet downstream of Tyson Drive.	None	*823
			Approximately 1,000 feet upstream of Kofa Road.	None	*870

State	City/town/county	Source of flooding	Location	#Depth in feet above ground. *Elevation in feet. (NGVD)	
				Existing	Modified
Maps are available for inspection at the Town of Quartzsite Office of Planning and Zoning, Town Hall, 465 North Plymouth, Quartzsite, Arizona.					
Send comments to The Honorable Patty Bergen, Mayor, Town of Quartzsite, 465 North Plymouth, Quartzsite, Arizona 85346.					
Arizona	Yavapai County (Unincorporated Areas).	Dry Creek	Approximately 1,500 feet downstream of Sunset Hills Drive.	None	*4,025
			Approximately 2,000 feet upstream of Sunset Hills Drive.	None	*4,058
Maps are available for inspection at the Yavapai County Flood Control District, 255 East Gurley Street, Prescott, Arizona.					
Send comments to The Honorable Gheral Brownlow, Chairperson, Yavapai County Board of Supervisors, 1015 Fair Street, Room 310, Prescott, Arizona 86301.					
California	Burbank (City) Los Angeles County.	Lockheed Drain Channel	At confluence with Burbank Western Flood Control Channel.	None	*578
			Approximately 1.1 miles upstream of access road.	None	*711
		Lake Street Overflow	Approximately 410 feet downstream of Chestnut Street.	None	*576
			Approximately 310 feet upstream of Chestnut Street.	None	*577
		North Overflow	At confluence with Lockheed Drain Channel.	None	*592
			At divergence from Lockheed Drain Channel.	None	*641
		Flow Along Empire Avenue.	Approximately 140 feet downstream of Hollywood Way.	None	*669
			Approximately 0.4 mile upstream of Hollywood Way.	None	*691
Maps are available for inspection at the City of Burbank Department of Public Works, 275 East Olive Avenue, Burbank, California.					
Send comments to The Honorable Bob Kramer, Mayor, City of Burbank, 275 East Olive Avenue, Burbank, California 91502.					
California	Humboldt County (Unincorporated Areas).	Eastside Channel	Approximately 400 feet south of intersection of Market Street and Van Ness Avenue.	None	*28
		Williams Creek	At confluence with Salt River	None	*28
			At Rose Avenue	None	*47
			Approximately 1,150 feet upstream of Grizzly Bluff Road.	None	*65
		Janes Creek	Approximately 800 feet upstream of Samoa Road.	None	*7
			Approximately 140 feet upstream of Lumberyard Road.	*24	*24
		Mad River (At Blue Lake)	Approximately 6,000 feet upstream of confluence with Noisy Creek.	None	*65
			At Hatchery Road	None	*86
		Dave Power's Creek	Approximately 100 feet upstream of an unnamed road (log bridge).	None	*72
			Approximately 2,150 feet upstream of confluence with Mad River.	*77	*75
Maps are available for inspection at the Humboldt County Planning Department, 3015 H Street, Eureka, California.					
Send comments to The Honorable John E. Murray, Humboldt County Administrative Officer, 825 Fifth Street, Eureka, California 95501.					
California	Los Angeles (City)	Overflow Area of Lockheed Storm Drain.	At Vanowen Street	None	*702
	Los Angeles County.		Approximately 350 feet upstream of Vanowen Street.	None	*707
Maps are available for inspection at the B Permit Desk, 14410 Sylvan Street, Second Floor, Van Nuys, California, and the Stormwater Management Division, 650 South Spring Street, Suite 700, Los Angeles, California.					
Send comments to The Honorable Richard J. Riordan, Mayor, City of Los Angeles, City Hall East, Eighth Floor, 200 North Main Street, Los Angeles, California 90012.					
California	Menlo Park (City)	Shallow Flooding	At the intersection of Laurel Avenue and Haight Street.	None	*24
	San Mateo County		At the intersection of Pope Street and Woodland Avenue.	None	*43
			At the intersection of Willow and Middlefield Roads.	None	*56

State	City/town/county	Source of flooding	Location	#Depth in feet above ground. *Elevation in feet. (NGVD)	
				Existing	Modified
Maps are available for inspection at the City of Menlo Park Engineering Department, 701 Laurel Street, Menlo Park, California. Send comments to The Honorable Chuck Kinney, Mayor, City of Menlo Park, 701 Laurel Street, Menlo Park, California 94025.					
California	Napa (City)	Napa Creek	At confluence with Napa River	*22	*21
	Napa County		Approximately 200 feet upstream of State Highway 29.	*44	*46.1
Maps are available for inspection at the City of Napa Department of Public Works, 1195 Third Street, Napa, California. Send comments to The Honorable Ed Henderson, Mayor, City of Napa, P.O. Box 0660, Napa, California 94559.					
California	Palo Alto (City)	Shallow Flooding	At the intersection of Canning Avenue and Wildwood Lane.	#2	*10
	Santa Clara County		At the intersection of Palo Alto Avenue and Chaucer Street.	#1	*40
			At the intersection of Palo Alto Avenue and Byron Street.	#1	*56
Maps are available for inspection at the City of Palo Alto Public Works Department, 250 Hamilton Avenue, Sixth Floor, Palo Alto, California. Send comments to The Honorable Dick Rosenbaum, Mayor, City of Palo Alto, 250 Hamilton Avenue, Palo Alto, California 94301.					
California	Santa Clara (City)	San Tomas Aquino Creek	Just upstream of Old Mountain View Alviso Road.	None	*11
	Santa Clara County		Approximately 300 feet upstream of Monroe Street.	None	*53
Maps are available for inspection at the City of Santa Clara Department of Public Works, 1500 Warburton Avenue, Santa Clara, California. Send comments to The Honorable Judy Nadler, Mayor, City of Santa Clara, City Hall, 1500 Warburton Avenue, Santa Clara, California 95050.					
California	Shasta Lake (City)	Churn Creek	Approximately 8,200 feet downstream of Ashby Road.	*662	*663
	Shasta County		Just upstream of Hill Street	None	*811
			Approximately 900 feet upstream of wooden footbridge.	None	*1,119
California	Churn Creek	North Branch	Approximately 850 feet downstream of Coeur d'Alene Avenue.	*715	*710
		Just upstream of Southern	Pacific Railroad	*792	*793
			Approximately 2,900 feet upstream of Shasta Dam Boulevard.	None	*786
		Churn Creek South Branch.	Approximately 3,600 feet downstream of Shasta Gateway Drive.	None	*683
			Approximately 450 feet upstream of Phoenix Spa Road.	None	*748
		Nelson Creek	Approximately 1,650 feet downstream of Southern Pacific Railroad.	None	*734
			Just upstream of Southern Pacific Railroad.	None	*776
			Approximately 950 feet upstream of Flanagans Road.	None	*865
		Little Churn Creek	Just upstream of Lake Boulevard	None	*815
			Approximately 2,300 feet upstream of Lake Boulevard.	None	*859
		Rich Gulch Creek	Approximately 170 feet upstream of Lake Boulevard.	None	*832
			Approximately 2,550 feet upstream of Lake Boulevard.	None	*907
		Salt Creek	Approximately 4,100 feet downstream of Twin View Boulevard.	*647	*647
			Just downstream of Shasta Dam Boulevard.	*758	*755
			Approximately 1,200 feet upstream of Black Canyon Road.	None	*835
		Salt Creek North Branch	Approximately 650 feet downstream of Deer Creek Road.	None	*736
			Just downstream of Southern Pacific Railroad.	None	*835
			Just upstream of Shop Road	None	*941
		Salt Creek South Branch	Approximately 300 feet downstream of Deer Creek Boulevard.	None	*680
			Approximately 2,400 feet upstream of Smith Avenue.	None	*735

State	City/town/county	Source of flooding	Location	#Depth in feet above ground. *Elevation in feet. (NGVD)	
				Existing	Modified
California		Moody Creek	Approximately 1,550 feet upstream of Moody Creek Road.	None	*674
			At confluence with Rancheria Creek	None	*810
			Approximately 4,200 feet upstream of confluence with Rancheria Creek.	None	*856
		Rancheria Creek	Approximately 250 feet upstream of confluence with Moody Creek.	None	*813
			Approximately 6,000 feet upstream of confluence with Moody Creek.	None	*890
		Rancheria Creek North Branch.	Approximately 100 feet upstream of confluence with Rancheria Creek.	None	*815
			Approximately 5,850 feet upstream of confluence with Rancheria Creek.	None	*867
Maps are available for inspection at the City of Shasta Lake Planning Division, 1650 Stanton Drive, Shasta Lake, California.					
Send comments to Mr. Alan Harvey, City Manager, City of Shasta Lake, 1650 Stanton Drive, Shasta Lake, California.					
California	Shasta County (Unincorporated Areas).	Churn Creek North Branch	Approximately 3,100 feet upstream of Shasta Dam Boulevard.	None	*992
			Approximately 3,750 feet upstream of Shasta Dam Boulevard.	None	*1,043
		Churn Creek South Branch.	Just downstream of Southern Pacific Railroad.	None	*748
			Just upstream of Southern Pacific Railroad.	None	*758
		Little Churn Creek	Approximately 2,700 feet upstream of Lake Boulevard.	None	*864
			Approximately 3,150 feet upstream of Lake Boulevard.	None	*871
		Rich Gulch Creek	Approximately 600 feet upstream of Southern Pacific Railroad.	None	*912
			Approximately 1,000 feet upstream of Southern Pacific Railroad.	None	*921
		Nelson Creek	Approximately 950 feet upstream of Flanagans Road.	None	*865
			Approximately 1,600 feet upstream of Flanagans Road.	None	*873
		Salt Creek (Upper Reach)	Approximately 800 feet downstream of Southern Pacific Railroad.	None	*835
			Just upstream of Southern Pacific Railroad.	None	*889
		Moody Creek	Approximately 750 feet downstream of Moody Creek Drive.	None	*660
			Just downstream of Cascade Boulevard	None	*768
			Approximately 9,150 feet upstream of Cascade Boulevard.	None	*868
		Rancheria Creek	Approximately 850 feet downstream of Southern Pacific Railroad.	None	*895
			Just upstream of Southern Pacific Railroad.	None	*992
		Rancheria Creek North Branch.	Approximately 2,600 feet upstream of confluence with Rancheria Creek.	None	*841
			Approximately 6,400 feet upstream of confluence with Rancheria Creek.	None	*872
Maps are available for inspection at 1855 Placer Street, Room 206, Redding, California.					
Send comments to The Honorable Doug Latimer, Chief Administrative Officer, Shasta County, 1815 Yuba Street, Suite 2, Redding, California 96001.					
Colorado	Larimer County (Unincorporated Areas).	Coal Creek	Approximately 3,000 feet downstream of Fourth Street.	None	*5,166
			Approximately 3,000 feet upstream of Windsor Ditch.	None	*5,230
Maps are available for inspection at the Larimer County Engineering Department, 218 West Mountain, Fort Collins, Colorado.					
Send comments to The Honorable Cheryl Olson, Chairman, Larimer County Board of Commissioners, P.O. Box 1190, Fort Collins, Colorado 80522.					
Colorado	Wellington (Town)	Coal Creek	Approximately 2,000 feet downstream of Fourth Street.	*5,180	*5,182

State	City/town/county	Source of flooding	Location	#Depth in feet above ground. *Elevation in feet. (NGVD)	
				Existing	Modified
	Larimer County		Approximately 1,000 feet north of Windsor Ditch.	None	*5,222
Maps are available for inspection at the Town of Wellington Town Hall, 3735 Cleveland Avenue, Wellington, Colorado.					
Send comments to The Honorable George Lutz, Mayor, Town of Wellington, P.O. Box 245, Wellington, Colorado 80549.					
Kansas	Perry (City) Jefferson County.	Kansas River	Approximately 1,700 feet downstream of County Highway 215.	*848	+846
Kansas			At confluence of Delaware River	*850	+850
		Delaware River	At Seventh Street, extended to River	*850	+850
Maps are available for inspection at the City of Perry City Hall, 119 Elm Street, Perry, Kansas.					
Send comments to The Honorable Matt Willkomm, Mayor, City of Perry, P.O. Box 724, Perry, Kansas 66073.					
*Elevation in feet (NGVD)					
+Elevation in feet (NAVD)					
Please note that to convert to NAVD, add 0.26 foot to NGVD elevations.					
Louisiana	Lafayette Parish and Incorporated Areas.	Bayou Queue de Tortue ...	Approximately 2,400 feet downstream of State Route 719, at confluence of South Branch.	None	*27
			Just upstream of State Route 343	*34	*32
		Duson Branch	Approximately 1,420 feet downstream of U.S. Route 90.	*34	*31
			Approximately 70 feet upstream of Anderson Road.	*34	*33
		North Branch	Approximately 1,300 feet downstream of U.S. Route 90.	None	*29
			Approximately 600 feet upstream of State Route 1096.	None	*31
		South Branch	At confluence with Bayou Queue de Tortue.	None	*28
			At divergence from Bayou Queue de Tortue.	None	*31
Maps are available for inspection at 806 First Street, Duson, Louisiana.					
Send comments to The Honorable Gene Hernandez, Mayor, Town of Duson, P.O. Box 10, Duson, Louisiana 70529–0010.					
Maps are available for inspection at 707 West University Avenue, Lafayette, Louisiana.					
Send comments to The Honorable Walter Comeaux, Parish President, Lafayette Parish, P.O. Box 4017-C, Lafayette, Louisiana 70502.					
Louisiana	Natchez (Village) Natchitoches Parish.	Bayou Natchez	Approximately 4/5 mile downstream of Main Street near corporate limits.	*107	*106
			Approximately 9/10 mile upstream of Main Street near corporate limits.	*107	*106
Maps are available for inspection at 181 Main Street, Natchez, Louisiana.					
Send comments to The Honorable Clave Davis, Mayor, Village of Natchez, P.O. Box 229, Natchez, Louisiana 71456.					
Louisiana	Natchitoches Parish (Unincorporated Areas).	Cane River-Old River-Bayou Natchez.	Cane River-Red Bayou Diversion Canal at Parish boundary, approximately 1 mile downstream of confluence with Cane River.	None	*99
			Cane River approximately 1.5 miles upstream of State Route 119.	*106	104
			Old River at City of Natchitoches southwest corporate limits, just downstream of State Route 1.	*110	*110
		Bayou Bonna Vista	At confluence with Winn Creek	None	*154
			At Natchitoches Parish corporate limits, approximately 2.2 miles upstream of confluence with Winn Creek.	None	*163
		Cox Branch	At confluence with Bayou DuPont	None	*141
			At Natchitoches Parish corporate limits, approximately 2 miles upstream of Louisiana Highway 120.	None	*162
		Bayou DuPont	At confluence with Little River	None	*129
			At Louisiana Highway 120	None	*145
		Winn Creek	At confluence with Bayou DuPont	None	*136
			At Parish Route 349	None	*195

State	City/town/county	Source of flooding	Location	#Depth in feet above ground. *Elevation in feet. (NGVD)	
				Existing	Modified
Maps are available for inspection at 203 St. Denis, Room 116, Natchitoches, Louisiana.					
Send comments to Mr. Randy Lucky, Police Jury Administrator, P.O. Box 799, Natchitoches, Louisiana 71458.					
Louisina	Richland Parish (Unincorporated Areas).	Bayou Macon	Approximately 4 miles downstream of Interstate 20.	None	*75
			Approximately 5.4 miles upstream of U.S. 80.	None	*79
Maps are available for inspection at Courthouse Square, Richland Parish, Louisiana.					
Send comments to The Honorable Earnes Greer, Jr., Police Jury President, P.O. Box 668, Rayville, Louisiana 71269.					
Lousiana	Slidell (City)	Diversion Canal (W–14 Main).	At Daney Street	*9	*9
	St. Tammany Parish.		Approximately 700 feet upstream of Pawns Road.	None	*19.5
		Bayou Vincent	Approximately 1,500 feet downstream of West Hall Avenue.	*9	*9
			Approximately 1,000 feet downstream of Interstate Highway 12.	*14.5	*13.8
Louisiana		West Diversion Canal	At confluence with Bayou Vincent	None	*11.8
			At confluence with Diversion Canal (W–14 Main).	None	*15.1
		Rein Canal West	At confluence with Diversion Canal (W–14 Main).	None	*14.1
			At confluence with Rein Canal East	None	*15.1
		Rein Canal East	2,800 feet above confluence with French Branch.	None	*15
Maps are available for inspection at the City of Slidell City Hall, 2056 Second Street, Slidell, Louisiana.					
Send comments to The Honorable Salvatore Caruso, Mayor, City of Slidell, P.O. Box 828, Slidell, Louisiana 70959.					
Louisiana	St. Tammany Parish (Unincorporated Areas).	West Diversion Canal	At confluence with Bayou Vincent	None	*11.8
			2,600 feet upstream of Southern Railroad	None	*14.6
		Bayou Vincent	Approximately 1,000 feet downstream of West Hall Road.	None	*9
			Approximately 1,000 feet downstream of Interstate Highway 12.	*16.7	*16.5
		Rein Canal East	At confluence with French Branch	None	*14.2
			160 feet upstream of Interstate Highway 10.	None	*14.8
		Diversion Canal (W–14 Main).	At Daney Street	None	*9
			Approximately 700 feet upstream of Pawns Boulevard.	None	*19.8
Maps are available for inspection at 21490 Koop Road, Mandeville, Louisiana.					
Send comments to The Honorable Steve Stefanick, St. Tammany Parish President, 21490 Koop Road, Mandeville, Louisiana 70471.					
Nevada	Churchill County (Unincorporated Areas).	New River Drain	Just upstream of Harrigan Road	None	*3,956
			At divergence from Carson River	None	*3,974
Maps are available for inspection at the Churchill County Planning Department, 180 West First Street, Fallon, Nevada.					
Send comments to The Honorable James Regan, Commissioner, Churchill County, 10 West Williams Avenue, Fallon, Nevada 89406.					
Nevada	Fallon (City)	New River Drain	At Harrigan Road	None	*3,956
	Churchill County		Approximately 75 feet upstream of Taylor Place.	None	*3,967
Maps are available for inspection at the City of Fallon City Hall, Building Inspector's Office, 55 West Williams Avenue, Fallon, Nevada.					
Send comments to The Honorable Ken Tedford, Jr., Mayor, City of Fallon, 55 West Williams Avenue, Fallon, Nevada 89406.					
Oklahoma	Cleveland County and Incorporated Areas.	Chouteau Creek (North of Lexington).	Just downstream of Bryant Road	*1,071	*1,071
			Just upstream of Bryant Road	None	*1,073
			Just upstream of Cemetery Road	None	*1,124
		Dripping Springs Creek	Just downstream of Cemetery Road	*1,107	*1,107
			At confluence with Chouteau Creek	None	*1,085

State	City/town/county	Source of flooding	Location	#Depth in feet above ground. *Elevation in feet. (NGVD)	
				Existing	Modified
Maps are available for inspection at 201 South Jones, Norman, Oklahoma.					
Send comments to The Honorable Bill Graves, Chairman, Board of County Commissioners, 201 South Jones, Norman, Oklahoma 73069.					
Maps are available for inspection at 12031 Slaughterville Road, Lexington, Oklahoma.					
Send comments to The Honorable David Robinson, Mayor, Town of Slaughterville, 12031 Slaughterville Road, Lexington, Oklahoma 73051–7411.					
Oregon	Keizer (City) Marion County.	Lake Labish Ditch	At confluence with Claggett Creek	None	*122
			Just upstream of River Road	None	*132
			Approximately 3,300 feet upstream of River Road.	None	*133
Maps are available for inspection at 930 Chemawa Road, Keizer, Oregon.					
Send comments to The Honorable Dennis Koho, Mayor, City of Keizer, P.O. Box 21000, Keizer, Oregon 97307.					
Oregon	Douglas County (Unincorporated Areas).	Newton Creek	Just upstream of Stephens Street	None	*519
			Approximately 1,180 feet upstream of Parker Road.	None	*583
		South Umpqua River	Approximately 5,600 feet downstream of confluence of Newton Creek.	*428	*429
			At confluence of Newton Creek	*434	*433
Maps are available for inspection at the Douglas County Planning Department, Justice Building, Room 106, Douglas County Courthouse, Roseburg, Oregon.					
Send comments to The Honorable Joyce Morgan, Chairperson, Douglas County Board of Commissioners, 1036 Southeast Douglas, Roseburg, Oregon 97470.					
Oregon	Roseburg (City) Douglas County.	South Umpqua River	Approximately 5,160 feet downstream of confluence with Newton Creek.	*428	*428
			Approximately 170 feet downstream of confluence with Newton Creek.	*438	*437
Oregon			Just downstream of Interstate Highway 5	*422	*443
		Newton Creek	At confluence with South Umpqua River	*433	*433
			Just upstream of Stewart Parkway	None	*487
			Just upstream of Stephens Street	None	*520
Maps are available for inspection at the City of Roseburg Community Development Department, 900 Southeast Douglas Avenue, Roseburg, Oregon.					
Send comments to The Honorable Jeri Kimmel, Mayor, City of Roseburg, 900 Southeast Douglas Avenue, Roseburg, Oregon 97470.					
Oregon	Marion County (Unincorporated Areas).	Lake Labish Ditch	At City of Keizer-Marion County line, approximately 4,050 feet upstream of River Road.	None	*133
Maps are available for inspection at the Marion County Community Development Department, 3150 Lancaster Drive Northeast, Salem, Oregon.					
Send comments to The Honorable Randall Franke, Chairperson, Marion County Board of Commissioners, 100 High Street Northeast, Salem, Oregon 97301–3670.					
Texas	Bastrop County and Incorporated Areas.	Cedar Creek	Approximately 5,600 feet downstream of Farm Market (FM) Road 535.	*410	*411
			Approximately 200 feet downstream of Watts Lane.	*432	*432
			Just downstream of FM 812	None	*451
Maps are available for inspection at the Bastrop County Courthouse, 804 Pecan Street, Bastrop, Texas.					
Send comments to The Honorable Peggy Walicek, Judge, Bastrop County, 804 Pecan Street, Bastrop, Texas 78602.					
Texas	Caldwell County (Unincorporated Areas).	San Marcos River	At confluence of Plum Creek	*354	*341
			Just upstream of U.S. Highway 10	*358	*355
			Just upstream of U.S. Highway 90	*380	*379
			Just upstream of State Highway 671	*411	*409
			Just upstream of State Highway 20	*442	*442
			Just upstream of FM Road 1977	*487	*485
			Just upstream of County Road 21	*559	*564
		Bypass Creek	At confluence with San Marcos River	*549	*553
			Approximately 150 feet upstream of Camp Gary Access Road.	*577	*577

State	City/town/county	Source of flooding	Location	#Depth in feet above ground. *Elevation in feet. (NGVD)	
				Existing	Modified
		Martindale Diversion	Approximately 2.8 miles downstream of FM Road 1979 at the convergence with the San Marcos River.	None	*500
			Just downstream of FM Road 1979 at the divergence from the San Marcos River.	None	*522
		Brushy Creek	Approximately 1 mile downstream of Highway 21.	None	*539
			Just upstream of Highway 21 at the northwest County boundary.	None	*542

Maps are available for inspection at the Caldwell County Courthouse, Main and San Antonio Streets, Lockhart, Texas.

Send comments to The Honorable Rebecca Hawener, Caldwell County Judge, County Courthouse, Third Floor, Main and San Antonio Streets, Lockhart, Texas 78644.

Texas	Luling (City) Caldwell County.	San Marcos River	At the southernmost corporate limits of the City of Luling.	None	*360
			Approximately 4,000 feet upstream of U.S. Highway 80.	None	*363

Maps are available for inspection at the City of Luling City Secretary's Office, City Hall, 509 East Crockett, Luling, Texas.

Send comments to The Honorable John A. Moore, Mayor, City of Luling, City Hall, P.O. Box 630, Luling, Texas 78648–0630.

Texas	Martindale (Town) Caldwell County.	San Marcos River	Approximately 400 feet downstream of FM Road 1979 at the southeastern corporate limits.	*517	*515
			Approximately 0.5 mile upstream of access road.	*539	*538
		Martindale Diversion	Approximately 0.5 mile downstream of FM Road 1979 at the southern corporate limits.	None	*512
			Just downstream of FM Road 1979 at the divergence from the San Marcos River.	None	*522

Maps are available for inspection at the Town of Martindale Town Hall, 409 Main Street, Martindale, Texas.

Send comments to The Honorable Maybeth Bayley, Mayor, Town of Martindale, P.O. Box 365, Martindale, Texas 78655.

Washington	Bothell (City) ..... King and Snohomish Counties.	North Creek	At confluence with Sammamish River	*22	*22
			At 208th Street Southeast	None	*123

Maps are available for inspection at the City of Bothell Department of Community Development, 9654 Northeast 182nd Street, Bothell, Washington.

Send comments to The Honorable Debbie Treen, Mayor, City of Bothell, City Hall, 18305 101st Avenue Northeast, Bothell, Washington 98011.

Washington	Mason County (Unincorporated Areas).	Skokomish River	Just upstream of State Route 106	*16	*17
			Approximately 2,000 feet downstream of confluence of North and South Fork Skokomish Rivers.	*54	*52

Maps are available for inspection at the Mason County Department of Community Development, 411 North Fifth Street, Shelton, Washington.

Send comments to The Honorable Mary Jo Cady, Chairperson, Mason County Board of Commissioners, 411 North Fifth Street, Shelton, Washington 98584.

Washington	Okanogan County (Unincorporated Areas).	Early Winters Creek	Approximately 0.5 mile downstream of State Highway 20.	None	#5
			Approximately 0.5 mile upstream of State Highway 20.	None	#5

Maps are available for inspection at the Okanogan County Planning and Development Office, 237 Fourth Avenue, Okanogan, Washington.

Send comments to The Honorable Ed Thiele, Chairperson, Board of Okanogan County Commissioners, P.O. Box 1009, Okanogan, Washington 98840.

Wyoming	Ranchester (Town) Sheridan County.	Tongue River	Approximately 6,350 feet downstream of Wolf Creek Road at southeastern corner of Town.	*3,742	*3,741
			Just upstream of Wolf Creek Road at intersection of corporate limits.	*3,762	*3,761
			Approximately 3,050 feet upstream of Wolf Creek Road at western end of Rowlings Drive.	*3,766	*3,767

State	City/town/county	Source of flooding	Location	#Depth in feet above ground. *Elevation in feet. (NGVD)	
				Existing	Modified
		Five Mile Creek	At corporate limits near confluence with Tongue River.	None	*3,763
			Just upstream of unnamed road located approximately 3,000 feet upstream of U.S. Route 14.	None	*3,785
Maps are available for inspection at the Town of Ranchester Town Hall, 145 Coffeen Street, Ranchester, Wyoming.					
Send comments to The Honorable Brad Lanka, Mayor, Town of Ranchester, P.O. Box 435, Ranchester, Wyoming 82839.					
Wyoming	Thermopolis (Town) Hot Springs County.	Big Horn River	At northeasternmost corporate limit, approximately 4,900 feet downstream of State Park Street.	None	*4,302
			At southernmost corporate limit, approximately 4,400 feet upstream of Eighth Street.	None	*4,332
Maps are available for inspection at the Town of Thermopolis Town Hall, 420 Broadway, Thermopolis, Wyoming.					
Send comments to The Honorable Mike Mortimore, Mayor, Town of Thermopolis, P.O. Box 603, Thermopolis, Wyoming 82443.					

(Catalog of Federal Domestic Assistance No. 83.100, ''Flood Insurance'')

Dated: May 11, 1998.

Michael J. Armstrong,

Associate Director for Mitigation.

[FR Doc. 98–13737 Filed 5–21–98; 8:45 am]

BILLING CODE 6718–04–P

FEDERAL EMERGENCY MANAGEMENT AGENCY

44 CFR Part 67

[Docket No. FEMA–7255]

Proposed Flood Elevation Determinations

AGENCY: Federal Emergency Management Agency, FEMA.

ACTION: Proposed rule.

SUMMARY: Technical information or comments are requested on the proposed base (1% annual chance) flood elevations and proposed base flood elevation modifications for the communities listed below. The base flood elevations are the basis for the floodplain management measures that the community is required either to adopt or to show evidence of being already in effect in order to qualify or remain qualified for participation in the National Flood Insurance Program (NFIP).

DATES: The comment period is ninety (90) days following the second publication of this proposed rule in a newspaper of local circulation in each community.

ADDRESSES: The proposed base flood elevations for each community are available for inspection at the office of the Chief Executive Officer of each community. The respective addresses are listed in the following table.

FOR FURTHER INFORMATION CONTACT: Matthew B. Miller, P.E., Chief, Hazards Study Branch, Mitigation Directorate, 500 C Street SW., Washington, DC 20472, (202) 646–3461.

SUPPLEMENTARY INFORMATION: The Federal Emergency Management Agency (FEMA or Agency) proposes to make determinations of base flood elevations and modified base flood elevations for each community listed below, in accordance with section 110 of the Flood Disaster Protection Act of 1973, 42 U.S.C. 4104, and 44 CFR 67.4(a).

These proposed base flood and modified base flood elevations, together with the floodplain management criteria required by 44 CFR 60.3, are the minimum that are required. They should not be construed to mean that the community must change any existing ordinances that are more stringent in their floodplain management requirements. The community may at any time enact stricter requirements of its own, or pursuant to policies established by other Federal, state or regional entities. These proposed elevations are used to meet the floodplain management requirements of the NFIP and are also used to calculate the appropriate flood insurance premium rates for new buildings built after these elevations are made final, and for the contents in these buildings.

National Environmental Policy Act

This proposed rule is categorically excluded from the requirements of 44 CFR Part 10, Environmental Consideration. No environmental impact assessment has been prepared.

Regulatory Flexibility Act

The Associate Director, Mitigation Directorate, certifies that this proposed rule is exempt from the requirements of the Regulatory Flexibility Act because proposed or modified base flood elevations are required by the Flood Disaster Protection Act of 1973, 42 U.S.C. 4104, and are required to establish and maintain community eligibility in the National Flood Insurance Program. As a result, a regulatory flexibility analysis has not been prepared.

Regulatory Classification

This proposed rule is not a significant regulatory action under the criteria of section 3(f) of Executive Order 12866 of September 30, 1993, Regulatory Planning and Review, 58 FR 51735.

Executive Order 12612, Federalism

This proposed rule involves no policies that have federalism implications under Executive Order 12612, Federalism, dated October 26, 1987.

Executive Order 12778, Civil Justice Reform

This proposed rule meets the applicable standards of section 2(b)(2) of Executive Order 12778.

List of Subjects in 44 CFR Part 67

Administrative practice and procedure, Flood insurance, Reporting and recordkeeping requirements.

Accordingly, 44 CFR part 67 is proposed to be amended as follows:

PART 67—[AMENDED]

1. The authority citation for part 67 continues to read as follows:

Authority: 42 U.S.C. 4001 *et seq.*; Reorganization Plan No. 3 of 1978, 3 CFR, 1978 Comp., p. 329; E.O. 12127, 44 FR 19367, 3 CFR, 1979 Comp., p. 376.

§ 67.4 [Amended]

2. The tables published under the authority of § 67.4 are proposed to be amended as follows:

State	City/town/county	Source of flooding	Location	#Depth in feet above ground. *Elevation in feet (NGVD)	
				Existing	Modified
Alabama	Birmingham (City) Jefferson County.	Tarrant Springs Branch	Approximately 25 feet upstream of confluence of Fivemile Creek.	*592	*591
			Approximately 500 feet downstream of Carson Road.	*708	*707
		Valley Creek	Approximately 750 feet upstream of U.S. Route 11.	*484	*486
			Approximately 1,200 feet upstream of 4th Avenue.	*570	*565
		Unnamed Creek 10	Approximately 700 feet downstream of Houston Road.	None	*659
			Approximately 500 feet upstream of Houston Road.	None	*672
		Black Creek	At confluence with Fivemile Creek	*430	*426
		(Fivemile Creek Basin)	Approximately 911 feet downstream of Walker Chapel Road.	*430	*429
		Village Creek	Approximately 150 feet upstream of Avenue F.	*522	*523
			Approximately 9.8 miles upstream of West Boulevard.	None	*694
		Unnamed Creek 32	Approximately 0.4 mile downstream of 50th Street.	*595	*594
			Approximately 0.22 mile upstream of 64th Place South.	654	652
		Approximately 0.22 mile upstream of 64th Place South.	*654	*652	
		Old Unnamed	At confluence with Village Creek	*665	*668
		Creek 34	At confluence with Unnamed Creek 34.	*683	*684
		Unnamed Creek 34	At confluence with Village Creek	None	*679
			Approximately 0.47 mile upstream of Private Road.	*696	*695

Maps available for inspection at the City Hall, Planning and Engineering Office, 710 North 20th Street, 5th Floor, Birmingham, Alabama.

Send comments to The Honorable Richard Arrington, Jr., Mayor of the City of Birmingham, Jefferson County, City Hall, 710 North 20th Street, Birmingham, Alabama 35203.

Alabama	Graysville (City)	Fivemile Creek	At downstream corporate limits	None	*323
	Jefferson County		At upstream corporate limits	None	*330

Maps available for inspection at the City Hall, 246 South Main Street, Graysville, Alabama.

Send comments to The Honorable Wayne Tuggle, Mayor of the City of Graysville, City Hall, Jefferson County, 246 South Main Street, Graysville, Alabama 35073.

Alabama	Homewood (City)	Shades Creek	Approximately 0.73 mile downstream of Interstate 65.	*623	*621
	Jefferson County		Approximately 1,056 feet downstream of U.S. Route 280.	*651	*650

Maps available for inspection at the Homewood Zoning Department, 175 Citation Court, Homewood, Alabama.

Send comments to The Honorable Barry McCulley, Mayor of the City of Homewood, P.O. Box 59666, Homewood, Alabama 35259.

Alabama	Hoover (City) Jefferson County.	Patton Creek	Approximately 725 feet upstream of Hurricane Branch.	*424	*425
			Approximately 600 feet upstream of Southland Drive.	*514	*513

Maps available for inspection at the City Hall, 100 Municipal Drive, Hoover, Alabama.

Send comments to The Honorable Frank S. Skinner, Jr., Mayor of the City of Hoover, City Hall, Jefferson County, 100 Municipal Drive, Hoover, Alabama 35216.

Alabama	Jefferson County (Unincorporated Areas).	Unnamed Creek 11	At the confluence with Unnamed Creek 10.	*617	*616
			Approximately 130 feet upstream of Wood Drive Circle.	None	*692
		Barton Branch	Just upstream of State Highway 79.	*574	*573

State	City/town/county	Source of flooding	Location	#Depth in feet above ground. *Elevation in feet (NGVD)	
				Existing	Modified
			Approximately 75 feet upstream of Goodrich Drive.	None	*627
		Tarrant Springs Branch	Approximately 0.62 mile upstream of confluence with Fivemile Creek.	*608	*609
			Approximately 400 feet downstream of Carson Road.	*708	*707
		Huckleberry Branch	Approximately 825 feet upstream of Tyler Road.	None	*513
			Approximately 0.27 mile upstream of Mountain Oaks Drive.	None	*824
		Patton Creek	Approximately 0.76 mile downstream of Patton Chapel Road.	*425	*424
			Downstream Westridge Drive	*531	*533
Maps available for inspection at the Jefferson County Courthouse/Land Development/Room 202A, 716 North 21st Street, Birmingham, Alabama.					
Send comments to Ms. Mary Buckelew, President of the Jefferson County Commission, Jefferson County, Room 211, 716 North 21st Street, Birmingham, Alabama 35263.					
Connecticut	Greenwich (Town), Fairfield.	Long Island Sound	At intersection of Indian Harbor Drive and Oneida Drive.	*12	*13
			Approximately 950 feet east of the intersection of River Avenue and Byram Shore Road (Captain Harbor).	*18	*20
Maps available for inspection at the Town of Greenwich Planning & Zoning Department, 101 Field Point Road, Greenwich, Connecticut.					
Send comments to Mr. Thomas Ragland, First Selectman for the Town of Greenwich, 101 Field Point Road, Greenwich, Connecticut 06836.					
Connecticut	Wallingford (Town), New Haven County.	Quinnipiac River	Approximately 1,300 feet upstream of corporate limits.	*22	*23
			Approximately 0.8 mile upstream of State Route 150 (Hall Avenue).	*40	*41
		Mansion Road Brook	Approximately 120 feet downstream of Wilbur Cross Parkway (State Route 15).	*28	*29
		Oakdale Brook	Approximately 200 feet downstream of Wilbur Cross Parkway (State Route 15).	*31	*32
Maps available for inspection at the Town of Wallingford Department of Planning and Zoning, 45 South Main Street, Wallingford, Connecticut.					
Send comments to The Honorable William W. Dickinson, Jr., Mayor of the Town of Wallingford, 45 South Main Street, Wallingford, Connecticut 06492.					
Delaware	Milford (City), Kent and Sussex Counties.	Mispillion River	Approximately 100 feet downstream of Washington Street.	*9	*10
			Immediately upstream of U.S. Route 113.	*11	*13
		Mullet Run	Approximately 500 feet upstream of confluence with Mispillion River.	*10	*11
			Approximately 800 feet upstream of confluence with Mispillion River.	*10	*11
		Presbyterian Branch	At confluence with Mispillion River	*11	*13
			Approximately 300 feet upstream of confluence with Mispillion River (At Kings Highway).	*11	*13
Maps available for inspection at the Milford City Hall, 201 South Walnut Street, Milford, Delaware.					
Send comments to Mr. Richard D. Carmean, City of Milford Floodplain/City Manager, 201 South Walnut Street, P.O. Box 159, Milford, Delaware 19963.					
Delaware	Sussex County ..... (Unincorporated Areas)	Betts Pond/Shoals Branch	At downstream face of U.S. Route 113.	None	*15
			Approximately 250 feet upstream of County Road 432.	None	*35

State	City/town/county	Source of flooding	Location	#Depth in feet above ground. *Elevation in feet (NGVD)	
				Existing	Modified
Maps available for inspection at the Sussex County Planning & Zoning Office, Sussex Administration #2 The Circle, Georgetown, Delaware.					
Send comments to Mr. Robert Stickels, Sussex County Administrator, Sussex County Administrative Office Building, P.O. Box 589, Georgetown, Delaware 19947.					
Florida	Leesburg (City), Lake County.	Lake Hollywood	Entire shoreline	*75	*77
		Ponding Area K1–1	Entire shoreline	*73	*69
		Ponding Area K1–2B	Entire shoreline	*75	*74
		Ponding Area K1–2C	Entire shoreline	*75	*73
		Ponding Area K1–2D	Entire shoreline	*75	*73
Maps available for inspection at the City of Leesburg Engineering Department, 501 West Meadow Street, Leesburg, Florida.					
Send comments to Mr. Anthony O. Otte, Leesburg City Manager, P.O. Box 490630, Leesburg, Florida 34749.					
Georgia	Augusta-Richmond County. (Unincorporated Areas)	Oates Creek	Approximately 50 feet upstream of Fort Gordon Highway	*126	*125
			Approximately 30 feet downstream of Olive Road	*147	*146
		Oates Creek	At confluence with Oates Creek	*147	*144
		Tributary No. 1	At Olive Road	155	154
		Rocky Creek	Just downstream of New Savannah Road.	*126	*125
			Approximately 800 feet downstream of Old Savannah Road.	*131	*130
		Butler Creek	Just downstream of Windsor Spring Road.	*187	*188
			Just upstream of Windsor Spring Road.	*189	*190
		Rocky Creek	At confluence with Rocky Creek	*129	*128
		Tributary No. 2	Approximately 0.3 mile upstream of confluence with Rocky Creek.	*129	*128
Maps available for inspection at the Augusta-Richmond County Planning Department, 525 Telfair Street, Augusta, Georgia.					
Send comments to The Honorable Larry E. Sconyers, Mayor of Augusta-Richmond County, City-County Municipal Building, 530 Greene Street, Room 806, Augusta, Georgia 30911.					
Massachusetts	Bourne (Town), Barnstable County	Buzzards Bay	At the intersection of Captain's Row and Mooring Road on Mashnee Island.	None	*23
			Approximately 600 feet south of the intersection of Scraggy Neck Road and Hospital Cove Road.	*14	*15
		Cape Cod Bay	Approximately 800 feet north of the intersection of Norris Road and Hillside Avenue.	*25	*16
			At the intersection of Pilgrim Road and Phillips Road.	*10	*11
Maps available for inspection at the Bourne Town Hall, 24 Perry Avenue, Buzzards Bay, Massachusetts.					
Send comments to Mr. Thomas Barlow, Chairman of the Town of Bourne Board of Selectmen, 24 Perry Avenue, Buzzards Bay, Massachusetts 02532.					
Michigan	Ionia (Township) Ionia County.	Grand River	Approximately 0.4 mile downstream of State Route 66.	None	*644
			Approximately 1.7 miles upstream of State Route 66.	None	*646
Maps available for inspection at the Ionia Township Hall, 2664 Nickleplate Road, Ionia, Michigan.					
Send comments to Mr. Larry Listerman, Township of Ionia Supervisor, 2664 Nickleplate Road, Ionia, Michigan 48846.					
Michigan	Owosso (Township), Shiawassee County.	Owasso Drain	At the downstream corporate limits	None	*740
			Approximately 1,500 feet upstream of Delaney Road.	None	*743
Maps available for inspection at the Owosso Township Hall, 2998 West M21, Owosso, Michigan.					
Send comments to Mr. Clare Walter, Owosso Township Supervisor, 2998 West M21, Owosso, Michigan 48867.					
New Jersey	Watchung (Borough), Somerset County.	Stony Brook	Approximately 40 feet downstream of Johnston Drive.	*114	*115
			Approximately 150 feet upstream of Somerset Street.	*188	*187

State	City/town/county	Source of flooding	Location	#Depth in feet above ground. *Elevation in feet (NGVD)	
				Existing	Modified
		East Branch Stony Brook	Approximately 675 feet downstream of Valley Drive.	*212	*213
			Approximately 20 feet downstream of Meadowlark Drive.	*238	*237
		Green Brook	At Raymond Avenue	*129	*128
			Approximately 1,600 feet upstream of Apple Tree Road.	*406	*405
Maps available for inspection at the Watchung Borough Hall, 15 Mountain Boulevard, Watchung, New Jersey.					
Send comments to The Honorable Anthony F. Addario, Mayor of the Borough of Watchung, 15 Mountain Boulevard, Watchung, New Jersey 07060.					
New York	Camillus (Village) Onondaga County.	Ninemile Creek	At northern corporate limits within Town of Camillus.	*411	*407
			Approximately 1,600 feet upstream of Unnamed Stream East.	*415	*411
		Unnamed Stream East	At the confluence with Ninemile Creek.	*415	*410
			Approximately 310 feet upstream of confluence within Ninemile Creek.	*415	*414
Maps available for inspection at the Camillus Village Hall, 37 Main Street, Camillus, New York.					
Send comments to The Honorable Richard E. Raichlin, Mayor of the Village of Camillus, 37 Main Street, Camillus, New York 13031.					
North Carolina	Halifax County (Unincorporated Areas).	Lake Gaston	Entire shoreline within county	*204	*205
Maps available for inspection at the Halifax County Zoning Department, 26 North King Street, Room 102, Halifax, North Carolina.					
Send comments to Mr. Charles B. Archer, Halifax County Manager, P.O. Box 38, Halifax, North Carolina 27839.					
Ohio	Bay Village (City), Cuyahoga County.	Wischmeyer Creek	Approximately 120 feet downstream of West Lake Road.	*606	*605
			At the upstream City of Bay Village corporate limits.	*649	*651
Maps available for inspection at the Bay Village City Hall, 350 Dover Center Road, Bay Village, Ohio.					
Send comments to The Honorable Thomas Jelepis, Mayor of the City of Bay Village, 350 Dover Center Road, Bay Village, Ohio 44140.					
Pennsylvania	Bensalem (Township), Bucks County.	Neshaminy Creek	Upstream side of U.S. Route 1	*47	*48
			Downstream side of Old Lincoln Highway.	*48	*49
Maps available for inspection at the Bensalem Township Building, Office of Building and Planning, 2400 Byberry Road, Bensalem, Pennsylvania.					
Send comments to The Honorable Joseph Digirolamo, Mayor of the Township of Bensalem, 2400 Byberry Road, Bensalem, Pennsylvania 19020.					
Pennsylvania	Bridgeton (Township), Bucks County.	Delaware River	At downstream corporate limits	*136	*135
			At upstream corporate limits	*149	*147
Maps available for inspection at the Bridgeton Township Zoning Office, 1370 Bridgeton Hill Road, Upper Black Eddy, Pennsylvania.					
Send comments to Ms. Barbara Guth, Chairman of the Bridgeton Township Board of Supervisors, P.O. Box 200, Upper Black Eddy, Pennsylvania 18972.					
Pennsylvania	Bristol (Borough), Bucks County.	Delaware River	Approximately 4,500 feet upstream of the confluence of Mill Creek No. 1.	*11	*12
			At upstream corporate limits	*11	*12
		Mill Creek No. 1	Approximately 500 feet upstream of Maple Beach Road.	*11	*12
			At downstream side of Pond Street.	*13	*14
Maps available for inspection at the Bristol Borough Municipal Building, 250 Pond Street, Bristol, Pennsylvania.					
Send comments to Mr. Fidel Esposito, Bristol Borough Manager, 250 Pond Street, Bristol, Pennsylvania 19007.					
Pennsylvania	Buckingham (Township), Bucks County.	Watson Creek	Approximately 50 feet downstream of Mill Road.	None	*280
			Upstream side of Mill Road	None	*281

State	City/town/county	Source of flooding	Location	#Depth in feet above ground. *Elevation in feet (NGVD)	
				Existing	Modified
Maps available for inspection at the Buckingham Township Zoning Office, 4613 Hughesian Way, Buckingham, Pennsylvania. Send comments to Ms. Deborah Rendon, Buckingham Township Manager, P.O. Box 413, Buckingham, Pennsylvania 18912.					
Pennsylvania	Durham (Township), Bucks County.	Delaware River	At downstream corporate limits	*152	*153
			Approximately 960 feet upstream from the confluence of Cooks Creek.	*157	*156
Maps available for inspection at the Durham Township Municipal Building, 215 Old Furnace Road, Durham, Pennsylvania. Send comments to Mr. Bartley E. Millett, Chairman of the Durham Township Board of Supervisors, P.O. Box 4, Durham, Pennsylvania 18972–8039.					
Pennsylvania	Falls (Township), Bucks County.	Delaware River	At downstream corporate limit	*12	*13
			Approximately 2.3 miles upstream of the confluence of Scott's Creek.	*13	*14
Maps available for inspection at the Falls Township Offices, Department of Code Enforcement, 188 Lincoln Highway, Suite 100, Fairless Hills, Pennsylvania. Send comments to Mr. James Dillon, Falls Township Manager, 188 Lincoln Highway, Suite 100, Fairless Hills, Pennsylvania 19030.					
Pennsylvania	Lower Makefield (Township), Bucks County.	Delaware River	Approximately 900 feet upstream of downstream corporate limits.	*29	*28
			At upstream corporate limits	*48	*47
Maps available for inspection at the Lower Makefield Township Building, 1100 Edgewood Road, Yardley, Pennsylvania. Send comments to Ms. Grace Godshalk, Chairperson of the Lower Makefield Board of Supervisors, 1100 Edgewood Boulevard, Yardley, Pennsylvania 19067.					
Pennsylvania	Middletown (Township), Bucks County.	Chub Run	At upstream side of Gilliam Avenue.	None	*196
			Approximately 90 feet upstream of Gilliam Avenue.	None	*196
		Neshaminy Creek	Upstream side of Old Lincoln Highway.	*50	*51
			Approximately 325 feet upstream of West Maple Avenue.	*63	*64
		Queen Anne Creek	Approximately 750 feet downstream of Oxford Valley Road.	None	*71
			Approximately 650 feet downstream of Oxford Valley Road.	None	*71
Maps available for inspection at the Middletown Township Hall, 2140 Trenton Road, Levittown, Pennsylvania. Send comments to Mr. John Burke, Middletown Township Manager, 2140 Trenton Road, Levittown, Pennsylvania 19056–1483.					
Pennsylvania	Morrisville (Borough), Bucks County.	Delaware River	Approximately 845 feet downstream of U.S. Route 1/Lincoln Highway.	*21	*22
			Approximately 1,160 feet upstream of Calhoun Road.	*28	*27
Maps available for inspection at the Morrisville Municipal Building, 35 Union Street, Morrisville, Pennsylvania. Send comments to Mr. Charles Grabowski, President of the Morrisville Borough Council, 142 Hillcrest Avenue, Morrisville, Pennsylvania 19067.					
Pennsylvania	New Britain (Township), Bucks County.	North Branch Neshaminy Creek.	Approximately 1,850 feet upstream of Park Avenue.	None	*252
			Approximately 0.72 mile upstream of Park Avenue.	None	*259
		Cooks Run	Approximately 150 feet above confluence with Neshaminy Creek.	*232	*233
			Approximately 1,420 feet above confluence with Neshaminy Creek.	*232	*241

State	City/town/county	Source of flooding	Location	#Depth in feet above ground. *Elevation in feet (NGVD)	
				Existing	Modified
Maps available for inspection at the New Britain Township Hall, 207 Park Avenue, Chalfont, Pennsylvania.					
Send comments to Mr. Robert Bender, New Britain Township Manager, 207 Park Avenue, Chalfont, Pennsylvania 18914.					
Pennsylvania	New Hope (Borough), Bucks County.	Delaware River	Approximately 1,450 feet upstream of downstream corporate limits.	*68	*69
			Approximately 260 feet downstream of upstream corporate limits.	*73	*72
		Aquetong Creek	At confluence with Delaware River	*70	*69
			Approximately 925 feet upstream of confluence with Delaware River.	*70	*69
Maps available for inspection at the New Hope Borough Hall, 41 North Main Street, New Hope, Pennsylvania.					
Send comments to Ms. Victoria Keller, New Hope Borough Manager, 41 North Main Street, New Hope, Pennsylvania 18938.					
Pennsylvania	Nockamixon (Township), Bucks County.	Delaware River	At downstream corporate limits	*149	*147
			Approximately 1,350 feet upstream of corporate limits.	*155	*153
		Gallows Run	At confluence with Delaware River	*155	*153
			Approximately 400 feet downstream of Fire Line Road.	*155	*154
		Haycock Creek	Approximately 1,525 feet downstream of Church Road.	None	*399
			At Haycock Run Road	None	*437
Maps available for inspection at the Nockamixon Township Building, 589 Lake Warren Road, Ferndale, Pennsylvania.					
Send comments to Mr. John R. MacFarland, Chairman of the Township of Nockamixon Board of Supervisors, P.O. Box 45, Revere, Pennsylvania 18953.					
Pennsylvania	Northampton (Township), Bucks County.	Mill Creek No. 2	Approximately 0.4 mile downstream of upstream crossing of Bristol Road.	None	*193
			Approximately 0.2 mile downstream of upstream crossing of Bristol Road.	None	*211
Maps available for inspection at the Township of Northampton Zoning Department, 55 Township Road, Richboro, Pennsylvania.					
Send comments to Mr. D. Bruce Townsend, Northampton Township Manager, 55 Township Road, Richboro, Pennsylvania 18954–1592.					
Pennsylvania	Perkasie (Borough), Bucks County.	East Branch Perkiomen Creek.	Downstream corporate limit	*307	*308
			Approximately 1,300 feet upstream of East Callowhill Road.	*319	*317
Maps available for inspection at the Perkasie Borough Hall, 311 South Ninth Street, Perkasie, Pennsylvania.					
Send comments to Mr. John Cornelius, Perkasie Borough Manager, P.O. Box 275, Perkasie, Pennsylvania 18944.					
Pennsylvania	Plumstead (Township), Bucks County.	Delaware River	At downstream corporate limits	*97	*98
			At confluence of Tohickon River	*103	*101
		Tohickon Creek	At confluence with Delaware River	*103	*101
			Approximately 0.5 mile upstream of confluence with Delaware River.	*103	*101
Maps available for inspection at the Plumstead Township Municipal Building, 5186 Stump Road, Plumsteadville, Pennsylvania.					
Send comments to Ms. Karen E. Helsel, Chairwoman of the Township of Plumstead Board of Supervisors, 5186 Stump Road, P.O. Box 387, Plumsteadville, Pennsylvania 18949.					
Pennsylvania	Quakertown (Borough), Bucks County.	Morgan Creek	Approximately 0.6 mile downstream of CONRAIL railroad tracks.	None	*486
			Approximately 0.7 mile downstream of CONRAIL railroad tracks.	None	*486

State	City/town/county	Source of flooding	Location	#Depth in feet above ground. *Elevation in feet (NGVD)	
				Existing	Modified
Maps available for inspection at the Quakertown Borough Hall, 15–35 North Second Street, Quakertown, Pennsylvania.					
Send comments to Mr. David L. Woglom, Quakertown Borough Manager, P.O. Box 727, Quakertown, Pennsylvania 18951.					
Pennsylvania	Richland (Township), Bucks County.	Licking Creek	Approximately 1,550 feet upstream of Main Street.	None	*510
			Approximately 2,150 feet upstream of Main Street.	None	*511
Maps available for inspection at the Richland Township Municipal Building, 1328 California Road, Richlandtown, Pennsylvania.					
Send comments to Mr. Bruce Fosselman, Richland Township Manager, P.O. Box 249, Richlandtown, Pennsylvania 18955–0249.					
Pennsylvania	Riegelsville (Borough), Bucks County.	Delaware River	Approximately 0.8 mile downstream of Riegelsville Highway Bridge.	*158	*157
			Upstream corporate limits	*163	*165
Maps available for inspection at the Riegelsville Municipal Building, 615 Easton Road, Riegelsville, Pennsylvania.					
Send comments to Mr. Thomas E. Stinnett, President of the Riegelsville Borough Council, P.O. Box 551, Riegelsville, Pennsylvania 18077.					
Pennsylvania	Solebury (Township), Bucks County.	Delaware River	Approximately 2,400 feet downstream of confluence with Pidcock Creek.	*62	*63
			At upstream corporate limits	*96	*98
		Coppernose Run	At confluence with Delaware River	*92	*94
			Approximately 280 feet upstream of confluence with Delaware River.	*96	*97
		Primose Creek	At confluence with Delaware River	*76	*75
			Approximately 150 feet upstream of confluence with Delaware River.	*76	*75
		Paunacussing Creek	At confluence with Delaware River	*96	*97
			Approximately 1,450 feet upstream of confluence with Delaware River.	*96	*97
		Cuttalossa Creek	At confluence with Delaware River	*90	*92
			Downstream side of dam	*90	*92
Maps available for inspection at the Solebury Township Municipal Building, 3092 Sugan Road, Solebury, Pennsylvania.					
Send comments to Mr. Thomas D. Caracio, Chairman of the Township of Solebury Board of Supervisors, 3092 Sugan Road, P.O. Box 139, Solebury, Pennsylvania 18963.					
Pennsylvania	Tinicum (Township), Bucks County.	Delaware River	Approximately 1,100 feet downstream from Point Pleasant Byrum Highway.	*103	*101
			At upstream corporate limits	*136	*135
		Tohickon Creek	At confluence with Delaware River	*103	*101
			Approximately 0.5 mile upstream of confluence with Delaware River.	*103	*101
		Cafferty Run	Approximately 1,225 feet upstream from confluence with Pennsylvania Canal.	*123	*122
			Approximately 750 feet downstream from Geigel Hill Road.	*123	*122
Maps available for inspection at the Tinicum Township Municipal Building, 163 Municipal Road, Pipersville, Pennsylvania.					
Send comments to Mr. Nicholas C. Forte, Chairman of the Township of Tinicum Board of Supervisors, 163 Municipal Road, Pipersville, Pennsylvania 18947.					
Pennsylvania	Tullytown (Borough), Bucks County.	Delaware River	Approximately 0.5 mile upstream of confluence of Martins Creek.	*12	*13
			Upstream corporate limits	*12	*13
		Martins Creek	Upstream side of Bristol Pike	None	*22
			Upstream corporate limits	None	*22

State	City/town/county	Source of flooding	Location	#Depth in feet above ground. *Elevation in feet (NGVD)	
				Existing	Modified
Maps available for inspection at the Borough of Tullytown Municipal Building, 500 Main Street, Tullytown, Pennsylvania.					
Send comments to Mr. Edward Czyczk, Tullytown Borough Council President, Tullytown Municipal Building, 500 Main Street, Tullytown, Pennsylvania 19007.					
Pennsylvania	Upper Makefield (Township), Bucks County.	Delaware River	At downstream corporate limits	*48	*47
			Approximately 1,700 feet downstream of confluence with Pidcock Creek.	*62	*63
		Jericho Creek	At confluence with Delaware River	*56	*58
			Approximately 600 feet upstream of River Road.	*57	*58
		Pidcock Creek	Approximately 300 feet downstream of Windy Bush Road.	None	*107
			At upstream corporate limit	None	*108
Maps available for inspection at the Upper Makefield Township Building, 1076 Eagle Road, Newtown, Pennsylvania.					
Send comments to Ms. Rose Marie Sauter, Chairperson of the Township of Upper Makefield Board of Supervisors, 1076 Eagle Road, Newtown, Pennsylvania 18940.					
Pennsylvania	Yardley (Borough), Bucks County.	Delaware River	Approximately 1,720 feet downstream of CONRAIL bridge.	*36	*40
			At upstream corporate limits	*42	*43
		Brock Creek	At confluence with Delaware River	*41	*42
			Approximately 355 feet upstream of Main Stream.	*41	*42
		Silver Creek No. 1	At confluence with Pennsylvania Canal.	*40	*41
			Approximately 100 feet downstream of Main Street.	*40	*41
Maps available for inspection at the Yardley Borough Hall, 56 South Main Street, Yardley, Pennsylvania.					
Send comments to Mr. Joseph Hunter, Yardley Borough Council President, 56 South Main Street, Yardley, Pennsylvania 19067.					
West Virginia	Monongalia County (Unincorporated Areas).	Aaron Creek	Approximately 1,100 feet downstream of Route 64.	*846	*845
			Just downstream of Interstate 48	None	*949
Maps available for inspection at the Monongalia County Office of Emergency Management, 74 Vandervort Drive, Morgantown, West Virginia.					
Send comments to Mr. John W. Pyles, President of the Monongalia County Commission, 243 High Street, Morgantown, West Virginia 26505.					

(Catalog of Federal Domestic Assistance No. 83.100, ''Flood Insurance.'')

Dated: May 11, 1998.

Michael J. Armstrong,

Associate Director for Mitigation.

[FR Doc. 98–13736 Filed 5–21–98; 8:45 am]

BILLING CODE 6718–04–P

FEDERAL COMMUNICATIONS COMMISSION

47 CFR Part 54

[CC Docket 96–45, 97–160; DA 98–848]

Forward-Looking Economic Cost Mechanism For Universal Service Support

AGENCY: Federal Communications Commission.

ACTION: Proposed rule.

SUMMARY: In this Public Notice, we seek to augment the record on certain issues relating to the creation of a federal forward-looking economic cost mechanism, including the appropriate input values for that mechanism and the level of the revenue benchmark.

DATES: Comments from interested parties are due on May 26, 1998, and reply comments are due on June 9, 1998.

ADDRESSES: Interested parties must file an original and five copies of their comments with the Office of Secretary, Federal Communications Commission, Room 222, 1919 M Street, NW., Washington, DC 20554. Parties should send three copies of their comments to Sheryl Todd, Common Carrier Bureau, Federal Communications Commission, 2100 M. St, NW., 8th Floor, Washington, DC 20554. Parties should send one copy of their comments to the Commission's copy contractor, International Transcription Service, 1231 20th Street, NW., Washington, DC 20036.

FOR FURTHER INFORMATION CONTACT: Brad Wimmer, Accounting Policy Division, Common Carrier Bureau, (202) 418–7400.

SUPPLEMENTARY INFORMATION:

1. On May 8, 1997, the Commission released a *Universal Service Order* on Universal Service CC Docket No. 96–45, FCC 97–157 (released May 8, 1997) 62 FR 32862 (June 17, 1997). In the *Universal Service Order,* the Commission adopted a plan for universal service support for rural, insular, and high cost areas that will replace existing implicit federal subsidies with explicit, competitively neutral federal universal service support mechanisms. The Commission adopted the Joint Board's recommendation that an eligible carrier's level of universal service support should be based upon the forward-looking economic cost of

constructing and operating the network facilities and functions used to provide the services that will be supported by the federal universal service support mechanisms. The Commission determined that, beginning January 1, 1999, non-rural carriers will receive support based on the forward-looking economic cost of providing the supported services. The Commission further determined that high cost support for rural carriers should continue essentially unchanged and should not be based on forward-looking costs until further review has been completed, but no sooner than 2001.

2. Consistent with the Joint Board's recommendation, the Commission concluded in the *Universal Service Order* that it would need to determine costs based on a careful analysis of efficient network design, engineering practices, available technologies, and current technology costs. That is, to determine forward-looking costs, the Commission decided to look at all of the costs and cost-causative factors that go into building a network. The Commission decided to do this in two stages: First, it would look at the network design, engineering, and technology issues relevant to designing a network to provide the supported services. Second, the Commission said that it would look at the costs of the components of the network, such as cabling and switch costs, and various capital cost parameters, such as debt-equity ratios and depreciation rates (''input values'').

3. In a Further Notice of Proposed Rulemaking (*Further Notice*) 62 FR 42457 (Aug. 7, 1997), the Commission established a multi-phase plan to develop a federal mechanism that would send the correct signals for entry, investment, and innovation.[1] In particular, the Commission sought comment on the platform design and input values that it should adopt in a federal mechanism to estimate the cost of each of the elements of the telephone network necessary for non-rural carriers to provide the supported services to high cost areas. On July 9, 1997, the Bureau sought information through a ''Data Request'' from certain non-rural local exchange carriers (LECs) and holding companies to assist the Commission in evaluating the models and selecting a federal mechanism.[2]

Issues for Comment

4. We have already received significant comment in response to the *Further Notice* and *Data Request.* In light of the passage of time, however, we wish to give parties the opportunity to update their comments regarding the input values that should be used in the federal mechanism and in setting the level of the revenue benchmark. We also seek further comment on certain issues that may not have been adequately addressed by commenters in response to the *Further Notice* or *Data Request.* We note that parties' arguments for and against specific input values are significantly more persuasive when accompanied by supporting empirical data, including the assumptions on which those data are based. If empirical data are unavailable, we encourage parties to explain how proposed input values are otherwise verifiable and appropriate. By seeking additional comments on specific input values, we are not prejudging the outcome of issues raised in the Report to Congress or in the Public Notice on Proposals to Revise the Methodology for Determining Universal Service Support.[3] We emphasize that we are not seeking comment in this Public Notice on the network design, engineering and technology issues.

5. The issues relating to input values were outlined in the *Further Notice* and *Data Request,* and parties are encouraged to review the *Further Notice* and *Data Request* closely before preparing any comments concerning inputs. Parties that have already filed thorough comments concerning inputs in response to the *Further Notice* and *Data Request* should not reiterate those comments; the Commission will consider inputs comments filed in response to the *Further Notice* and *Data Request,* as well as comments filed in response to this Public Notice, in selecting the input values for the federal mechanism.

A. Inputs Issues

i. Customer Location Data

6. In the *Further Notice,* the Commission requested comment on the use of data that associate the location of each customer with latitudinal and longitudinal coordinates (geocode data) in a forward-looking economic cost mechanism.[4] In a *Public Notice* released on November 13, 1997 (62 FR 65389 (Dec.12, 1997)), the Common Carrier Bureau (Bureau) recommended that ''models be capable of accepting and using geocode data to the extent that such data are available and reliable.''[5]

7. The only geocode data currently on the record are those provided by the proponents of the HAI model.[6] The Metromail database on which HAI's residential geocodes are based is a commercial database developed primarily for the purpose of direct marketing. HAI's geocodes for businesses are based on a database of business addresses compiled by Dun & Bradstreet.

8. We seek comment on any alternative source of geocode data, or databases that could be used to develop geocodes for use in 1999, including information on the openness, reliability, and cost of the data.[7] For example, WorldCom notes the availability of global positioning satellite (GPS) devices, which they contend can provide latitude and longitude coordinates that are more precise than geocoding methods utilized by HAI.[8] We seek comment on whether the benefits of geocoding using a GPS device outweigh the burdens associated with developing the data, compared to

[1] Federal-State Joint Board on Universal Service, Forward-Looking Mechanism for High Cost Support for Non-Rural LECs, *Further Notice of Proposed Rulemaking,* CC Docket Nos. 96–45, 97–160, 12 FCC Rcd 18,514 (rel. July 18, 1997) 62 FR 42457 (Aug. 7, 1997) (*Further Notice*).

[2] Federal-State Joint Board on Universal Service, CC Docket No. 96–45, *Order,* DA 97–1433 (rel. July 9, 1997) (*Data Request*).

[3] See Federal-State Joint Board on Universal Service, Report to Congress, CC Docket No. 96–45 (April 10, 1998) at para. 197 (''We are committed to issuing a reconsideration order in response to the petitions filed asking the Commission to reconsider the decision to fund 25 percent of the required support amount.''); Proposals to Revise the Methodology for Determining Universal Service Support, Public Notice, DA 98–715 (rel. April 15, 1998) (''We seek to augment the record by encouraging interested parties to submit additional proposals for modifying the Commission's methodology (for determining the appropriate level of federal universal service support for non-rural carriers).'').

[4] *Further Notice,* 12 FCC Rcd at 18,536, 18,579–80 paras. 44, 176.

[5] Guidance To Proponents Of Cost Models In Universal Service Proceeding: Customer Location and Outside Plant, *Public Notice,* CC Docket Nos. 96–45, 97–160, DA–2372 (rel. Nov. 13, 1997) 62 FR 65389 (Dec.12, 1997).

[6] HAI was submitted by AT&T and MCI. See Letter from Richard N. Clarke, AT&T, to Magalie Roman Salas, FCC, dated Dec. 11, 1997). Versions of HAI filed before February 3, 1998, were known as the Hatfield Model.

[7] In filings with the Common Carrier Bureau, several incumbent LECs have represented that they have geocoded a relatively large percentage of their customers. See, *e.g.,* Letter from Ted Hackman, Cincinnati Bell, to Secretary, FCC, dated April 24, 1998 (99.8%,99.6%, and 99.2% of its customer accounts for Ohio, Kentucky, and Indiana, respectively); Letter from W. Scott Randolph, GTE, to Secretary, FCC, dated April 27, 1998.

[8] A GPS device can associate the physical structure to which a carrier provides services, such as a house, with coordinates identified by satellite technology. Letter from David Porter, WorldCom, to William Caton, FCC, dated Oct. 16, 1997 (World Com Oct. 16 *ex parte*) at 3.

alternative methods of obtaining geocoded data. We also request comment on other possible methods and technologies for geocoding business and residential locations, and their associated costs, in particular for partial use in determining support for 1999. Commenters suggesting alternative sources of data should include empirical evidence documenting and verifying the accuracy of these data sources, including how these data are typically used, who is currently using the data, the extent to which these data would be available for determining support in 1999, and the criteria used to develop these data.

ii. Maximum Copper Loop Length

9. In addition, we seek to augment the record on the appropriate maximum loop length that the federal mechanism should assume is permissible without the use of significantly more expensive electronics. The proponents of the BCPM model [9] assert that copper loops longer than 12,000 feet would require the use of a substantially more expensive extended-range card in the digital loop carrier (DLC), while the HAI proponents assert that copper lengths can extend to 18,000 feet using only a slightly more expensive card in the DLC. The resolution of this question has a significant effect on cost estimates because the maximum copper length constrains the maximum size of a serving area. We seek comment on this issue. In particular, we seek comment on the type and cost of line cards required to serve loops between 12,000 and 18,000 feet from a DLC remote terminal.

iii. Defining ''Households''

10. We also seek further comment on the appropriate input value to measure the number of households used in the federal mechanism. The sixth criterion identified in the Universal Service Order specifies that a ''model must estimate the cost of providing service for all businesses and households within a geographic region.'' [10] It appears that the Census Bureau uses the term ''households'' as a term of art to refer to occupied housing units.[11] Different parties have advocated alternative interpretations of the sixth criterion. BCPM identifies the cost of outside plant that would serve all housing units,[12] occupied or not, while HAI identifies the cost of serving Census-defined households with telephones.[13]

11. We encourage parties to submit additional comment on the appropriate universe of ''households'' that should be assumed for purposes of calculating the forward-looking cost of providing the supported services: total housing units (occupied and unoccupied), total households (housing units that are occupied), or households with telephones.[14] We also seek comment on the HAI proponents' assumption that uninhabited housing units or households without telephones are more likely to be located in remote areas than households with telephones.

12. In particular, we seek comment on alternative sources of data to those used in HAI [15] and BCPM [16] for determining the number of residential and business customers located in either the wire center, Census Block Group (CBG),[17] or CB.[18] Any such information should include empirical evidence documenting and verifying the accuracy, cost, and current availability of these data sources. We ask commenters to address whether we should require incumbent LECs to provide the universal service administrator with wire center boundary data and the number of residential, multi-line and single-line business lines served in each wire center.

iv. Depreciation

13. In the Universal Service Order, the Commission articulated a set of criteria that acceptable cost studies or models must meet in order to be used to determine federal high-cost support. These criteria were adopted to ensure consistency in the calculations of federal universal service support. In criterion five, the Commission noted that ''(e)conomic lives and future net salvage percentages used in calculating depreciation expense should be within the FCC-authorized range and use currently authorized depreciation lives.'' [19]

14. We seek comment on the particular values of depreciation lives and future net salvage percentages we should use to determine the forward-looking cost of providing supported services in a competitive environment. Commenters submitting specific proposals should submit the data and a description of the methodologies used to derive their estimates of depreciation lives and future net salvage values for all classes of assets. Because economic lives may differ from physical lives for a variety of reasons, we ask commenters to identify all of the factors used to derive their estimates. Commenters should discuss and quantify the impact all factors considered in their analysis have on projected economic lives and salvage values. For example, commenters should address the effect potential or actual competition, changes in asset prices, or the desire to introduce new services may have on asset lives. Commenters should also explain fully why their approach is appropriate for a model being used to estimate the forward-looking cost of providing supported services in high-cost areas and whether determining the cost of supported services requires the use of depreciation lives and salvage rates

[9] BCPM is sponsored by BellSouth, U S West, and Sprint Local Telephone Company. *See Submission to CC Docket Nos. 96–45 and 97–160 by Bellsouth, U S West, and Sprint dated Dec. 11, 1997.*

[10] *Universal Service Order,* 12 FCC Rcd at 8915 para. 250.

[11] See the Census Bureau's website at http://www.census.gov/population/estimates/housing/prhuhht1.txt (defining a housing unit as ''a house, an apartment, a mobile home, a group of rooms or a single room that is occupied (or if vacant, is intended for occupancy) as a separate living quarters.''). *See also* the Census Bureau's website at http://www.census.gov/population/methods/sthhmet.txt (''A housing unit is classified as vacant if no one is living in it, unless its occupants are only temporarily absent * * *. Vacant units are excluded if they are open to the elements; that is, the roof, walls, windows, and/or doors no longer protect the interior from the elements, or if there is positive evidence that the unit is condemned or is to be demolished.'')

[12] BCPM December 11 submission, Model Methodology at 8.

[13] AT&T and MCI *ex parte,* December 23, 1997.

[14] We note that the question of which ''households'' and business locations should be included for purposes of estimating the forward-looking cost of providing the supported services is distinct from the question of which lines should be supported. Indeed, we specified that the model must estimate the costs incurred to provide multi-line business services, special access, private lines and multiple residential connections. *Universal Service Order,* 12 FCC Rcd at 8915 para. 250. *Cf. Recommended Decision,* 12 FCC Rcd 87, 132–134, paras. 89–92 (1996) (recommending that support should be provided only for primary residential connections and single-line business connections, and that business connections should receive a lower level of support).

[15] In determining the number of customers in a Census Block (CB) or wire center, HAI utilizes the PNR National Access Line Model (NALM). The PNR NALM uses PNR survey information, the Local Exchange Routing Guide (LERG), Business Location Research (BLR) wire center boundaries, a Dun & Bradstreet business database, the Metromail household database, the Claritas 1996 demographic database, and U.S. Census Bureau estimates to calculate both the number of residential and business locations and access lines in each CB, and in each wire center in the United States.

[16] BCPM also uses U.S. Census Bureau data and business line data obtained from PNR.

[17] A census block group is a collection of census blocks. The Bureau of the Census defines a ''census block group'' as ''generally contain[ing] between 250 and 550 housing units, with the ideal size being 400 housing units.'' U.S. Census Bureau, 1990 Census of Population and Housing, at App. A, ''Area Classifications'' (issued Mar. 1992).

[18] We note that our request for a source of accurate and reliable data about the number of residential and business customers in a geographic area is related to our request for accurate, reliable, and extensive geocode data.

[19] *Universal Service Order,* 12 FCC Rcd at 8914 para. 250.

specifically designed for that purpose. Commenters recommending asset lives and salvage values that fall outside of Commission ranges should explain fully why such lives are appropriate. Finally, we note that BCPM and HAI use different methodologies for computing depreciation expenses. HAI uses straight-line depreciation,[20] while BCPM incorporates many different methodologies,[21] to compute depreciation and capital expenses. We seek comment on the specific advantages of the different methodologies available for calculating rates of economic depreciation (including those used in BCPM and HAI), the use of different methodologies for different assets, and the effect of their use on calculated costs. Commenters should provide studies supporting the methodologies advocated.

v. Cost of Installing Outside Plant

15. In the *Further Notice,* the Commission noted that a carrier's outside plant consists of a mix of aerial, underground, and buried cable. The cost of installing each type of outside plant depends on terrain conditions, line density, and other factors. For example, depending on the situation, cable can be placed in trenches dug by hand or with a backhoe, or it may be plowed directly into the ground. The total cost of construction depends upon the cost of each of these activities and the percentage of cable that is placed in each manner. In the *Further Notice,* the Commission tentatively concluded that installation costs for cable should vary based on terrain and line density and reached other tentative conclusions about the cost of installing outside plant.[22] The model proponents have filed default values for the cost of each of these activities and the percentage of cable that would be installed in each manner. We seek comment on the tentative conclusions in the *Further Notice* and the model proponents' default values. Additionally, Dr. David Gabel of Queens College has analyzed data from the Rural Utilities Service regarding the cost of installing cables. We seek comment on Dr. Gabel's analysis and whether it is applicable to non-rural carriers.[23] Parties supporting or refuting the appropriateness of the default values, or proposing alternate values, should provide documentation in support of their position. For example, parties may provide information on labor and capital tools rates, along with the quantity of inputs needed to construct the plant. Commenters should also address whether it is appropriate to use a composite rate for the nation or whether these rates should differ by state or region.

B. Revenues to be Included and Level of the Benchmark

16. In the *Universal Service Order,* the Commission determined that the level of federal high cost support that eligible non-rural carriers will receive will be 25 percent of the difference between the estimated forward-looking economic cost of providing the supported services and a revenue benchmark.[24] The Joint Board recommended that the Commission adopt a nationwide revenue benchmark to calculate such support. Because the ''cost estimated by the proxy models includes the cost of the facilities used to provide (local, discretionary, access, and other) services,'' [25] the Joint Board concluded that the benchmark should include revenues generated by all of the services provided over the network being modeled.[26] Further, the Joint Board recommended that the Commission adopt separate benchmarks for residential and business services.[27] In April 1997, a majority of the state members of the Joint Board concluded that the Commission should establish a benchmark based on cost—specifically, the national average proxy cost—rather than revenue against which to compare costs in a given area in order to determine support for that area.[28]

17. In the *Universal Service Order,* the Commission adopted the Joint Board's recommendation to establish a revenue-based benchmark, but indicated its intention to seek comment on the specific benchmark or benchmarks that should be used.[29] In the *Universal Service Order,* the Commission found that the calculation of the revenue benchmarks must be consistent with the method of calculating the forward-looking cost of constructing and operating the network.[30] In particular, it indicated in the *Universal Service Order* that the Commission would clarify the appropriate amount of access charge revenue that should be included in the revenue benchmark.[31] We seek comment generally on the amount of access revenues that should be included in the benchmark. Also, in the *Universal Service Order,* the Commission noted that the models filed in this proceeding do not include estimates of the costs of all the elements used in the delivery of access services.[32] Because access charges currently are above cost, however, the Commission concluded that ''unless and until both interstate and intrastate access charges have been reduced to recover only per-minute switch and transport costs, access revenues should be included in the benchmark.'' [33] Similarly, the Commission also stated that ''(w)e will seek further information to clarify the appropriate amount of * * * intraLATA toll revenue that should be included in the revenue benchmark.'' [34] We, therefore, seek comment on whether we should exclude from the revenue-benchmark estimates, for purposes of determining universal service support, the incremental costs associated with the provision of services that are not supported by universal service but which contribute to the revenue benchmark. We seek comment on this issue and ask commenters to provide estimates of the amount that should be deducted from the benchmark. We note that the models exclude the costs of switching and transport for intraLATA toll and interstate and intrastate access services. Alternatively, we seek comment on whether the models should be altered to include the incremental costs associated with the provision of services that are not supported by

[20] HAI Dec. 11 submission, Model Description at 67.

[21] BCPM Dec. 11 submission, Model Methodology at 80.

[22] See *Further Notice,* 12 FCC Rcd at 18,541–18,544, paras. 60–69.

[23] Dr. Gabel's paper is available on the World Wide Web at http://www.nrri.ohio-state.edu/, and also via a link from the Commission's Universal Service home page.

[24] *Universal Service Order,* 12 FCC Rcd at 8925–8926 para. 270. See also Federal-State Joint Board on Universal Service, Report to Congress, CC Docket No. 96–45, FCC 98–67, paras. 219–231 (rel. April 10, 1998). See also Common Carrier Bureau Seeks Comment on Proposals to Revise the Methodology for Determining Universal Service Support, *Public Notice,* DA 98–715 (rel. April 15, 1998).

[25] The Joint Board stated that ''[d]iscretionary services include services that are added on to basic local service, e.g., call waiting, call forwarding or caller ID.'' *Recommended Decision,* 12 FCC Rcd at 246 n.1002.

[26] *Recommended Decision,* 12 FCC Rcd at 246–47.

[27] *Recommended Decision,* 12 FCC Rcd at 247.

[28] Second State Proxy Models Report at 14.

[29] *Universal Service Order,* 12 FCC Rcd at 8919–20, 8923–24 paras. 259, 266.

[30] *Universal Service Order,* 12 FCC Rcd at 8924 para. 267. Specifically, for purposes of determining support, a revenue benchmark could be considered consistent with forward-looking cost estimates if all of the facilities used to deliver services included in the revenue benchmark are included in the cost estimates.

[31] *Universal Service Order,* 12 FCC Rcd at 8924 para. 267.

[32] *Universal Service Order,* 12 FCC Rcd at 8921 para. 262.

[33] *Universal Service Order,* 12 FCC Rcd at 8921 para. 262.

[34] *Universal Service Order,* 12 FCC Rcd at 8924 para. 267.

universal service but which contribute to the revenue benchmark.

18. We also encourage parties to provide further information about the services that can be provided over the network that the universal service mechanism is designed to support, and the revenues related to those services, because such information will enable us to set the benchmarks accurately. Based on 1994 data received in response to our earlier data request in CC Docket No. 80–286, the Commission suggested in the *Universal Service Order* that the benchmarks might be set at approximately $31 for residential service and $51 for business service.[35]

Final Regulatory Flexibility Analysis

19. In the *Universal Service Order* we conducted a Final Regulatory Flexibility Analysis (FRFA),[36] as required by the Regulatory Flexibility Act (RFA).[37] We received no petitions for reconsideration of that FRFA. In this present Public Notice, the Commission promulgates no additional final rules, and our action does not affect the previous analysis. If commenters believe that the proposals discussed in this Public Notice require additional RFA analysis, they should include a discussion of these issues in their comments.

Federal Communications Commission.

Magalie Roman Salas,

Secretary.

[FR Doc. 98–13654 Filed 5–21–98; 8:45 am]

BILLING CODE 6712–01–P

[35] *Universal Service Order,* 12 FCC Rcd at 8924 para. 267.

[36] *Universal Service Order,* 12 FCC Rcd at 9219–9260 paras. 870–983.

[37] See 5 U.S.C. 604. The RFA, see 5 U.S.C. 601 *et. seq.,* has been amended by the Contract With America Advancement Act of 1996, Pub. L. 104–121, 110 Stat. 847 (1996) (CWAAA). Title II of the CWAAA is the Small Business Regulatory Enforcement Fairness Act of 1996 (SBREFA).

DEPARTMENT OF THE INTERIOR

Fish and Wildlife Service

50 CFR Part 17

RIN 1018–AC13

Endangered and Threatened Wildlife and Plants; Reopening of Comment Period on Proposed Endangered Status for the San Xavier Talussnail

AGENCY: Fish and Wildlife Service, Interior.

ACTION: Proposed rule; notice of reopening of public comment period.

SUMMARY: The Fish and Wildlife Service (Service) provides notice that the public comment period for the proposal to list the San Xavier talussnail (*Sonorella eremita*) is reopened. This land snail is known to occur at a single site near Tucson, Arizona, in an area of limestone talus about 50 by 100 feet in size.

DATES: The comment period originally closed on May 24, 1994. This notice reopens the public comment period, which now closes on July 21, 1998.

ADDRESSES: Written comments and materials should be sent to the Field Supervisor, Arizona Ecological Services Field Office, U.S. Fish and Wildlife Service, 2321 W. Royal Palm Road, Suite 103, Phoenix, Arizona 85021. Comments and materials received will be available for public inspection during normal business hours, by appointment, at the above address.

FOR FURTHER INFORMATION CONTACT: Debra Bills, Arizona Ecological Services Field Office, at the above address or telephone (602) 640–2720.

SUPPLEMENTARY INFORMATION:

Background

The San Xavier talussnail was first proposed as endangered on March 23, 1994 (59 FR 13691). At that time, a 60-day public comment period was opened until May 23, 1994, and all interested parties were requested to submit factual reports or information that might contribute to the development of a final rule. A final determination of whether to list the San Xavier talussnail has not yet been made.

Following a recent examination of property boundaries, the Service discovered that the owner of the habitat occupied by the San Xavier talussnail is not the entity previously believed to be the owner. In consideration of the new information concerning ownership of the species' habitat and the length of time that has elapsed since the initial proposal, the Service has determined that reopening the comment period is necessary. The Service is seeking comments or suggestions from the public, other concerned governmental agencies, the scientific community, industry, or any other interested party concerning this proposed rule. The Service is seeking any new information that may have been developed since the proposal was published, and that may expand the current knowledge concerning the status, distribution, or threats surrounding the San Xavier talussnail.

Author: The primary author of this document is Jennifer Fowler-Probst, Arizona Ecological Services Field Office (see **ADDRESSES** section).

Authority

The authority for this action is the Endangered Species Act (16 U.S.C. 1532 *et seq.*).

Dated: May 13, 1998.

Jamie Rappaport Clark,

Director, Fish and Wildlife Service.

[FR Doc. 98–13795 Filed 5–21–98; 8:45 am]

BILLING CODE 4310–55–P

DEPARTMENT OF THE INTERIOR

Fish and Wildlife Service

50 CFR Part 20

RIN 1018–AD74

Extension of Comment Period: Migratory Bird Hunting Regulations Regarding Baiting and Baited Areas

AGENCY: Fish and Wildlife Service, Interior.

ACTION: Proposed rule; extension of comment period.

SUMMARY: The Service is extending the comment period on the **Federal Register** rule dated March 25, 1998 (63 FR 14415) that invites public comments on proposed changes to the migratory bird hunting regulations regarding baiting and baited areas.

DATES: The deadline for receipt of comments will be extended form May 25, 1998 to October 1, 1998.

ADDRESSES: Comments regarding this proposed rulemaking should be addressed to: Director, U.S. Fish and Wildlife Service, Post Office Box 3247, Arlington, Virginia 22203–3247, or sent via electronic mail to: R9LE—WWW@FWS.GOV. Comments may be hand delivered to 4401 North Fairfax Drive, Suite 500, Arlington, Virginia 22203. The public may inspect comments during normal business hours at 4401 North Fairfax Drive, Suite 500, Arlington, Virginia 22203.

FOR FURTHER INFORMATION CONTACT: Keven Adams, Chief, Division of Law Enforcement, telephone 703/358–1949, or Paul Schmidt, Chief, Office of Migratory Bird Management, telephone 703/358–1714.

SUPPLEMENTARY INFORMATION:

Background

The Fish and Wildlife Service (Service) has authority (16 U.S.C. 703–712 and 16 U.S.C. 742a-j) to regulate activities involving the hunting and other taking of migratory game birds. The Service has promulgated regulations (50 CFR part 20) for the hunting of migratory game birds that

includes sections for *Methods of Take* and *Definitions of Terms.*

In a **Federal Register** notice dated March 25, 1998, the Service proposed new regulatory language for: accidental scattering of agricultural crops or natural vegetation incidental to hunting, normal agricultural and soil stabilization practices, baited areas, baiting, manipulation, natural vegetation, and top-sowing of seeds. Proposed changes also included new guidance with respect to hunting over natural vegetation that has been manipulated. However, no change was proposed regarding application of strict liability to the migratory game bird baiting regulations.

The Service has received request from a number of organizations to extend the comment period. The Service invites careful consideration by all parties, and welcomes serious scrutiny from those committed to the long-term conservation of migratory birds. Therefore, to facilitate substantive public review, the Service is extending the comment period through October 1, 1998.

Dated: May 19, 1998.

Donald J. Barry,

Acting Assistant Secretary for Fish and Wildlife and Parks.

[FR Doc. 98–13875 Filed 5–21–98; 8:45 am]

BILLING CODE 4710–55–M

Notices

Federal Register
Vol. 63, No. 99
Friday, May 22, 1998

This section of the FEDERAL REGISTER contains documents other than rules or proposed rules that are applicable to the public. Notices of hearings and investigations, committee meetings, agency decisions and rulings, delegations of authority, filing of petitions and applications and agency statements of organization and functions are examples of documents appearing in this section.

DEPARTMENT OF AGRICULTURE

Submission for OMB Review; Comment Request

May 18, 1998.

The Department of Agriculture has submitted the following information collection requirement(s) to OMB for review and clearance under the Paperwork Reduction Act of 1995, Pub. L. 104–13. Comments regarding (a) whether the collection of information is necessary for the proper performance of the functions of the agency, including whether the information will have practical utility; (b) the accuracy of the agency's estimate of burden including the validity of the methodology and assumptions used; (c) ways to enhance the quality, utility and clarity of the information to be collected; (d) ways to minimize the burden of the collection of information on those who are to respond, including through the use of appropriate automated, electronic, mechanical, or other technological collection techniques or other forms of information technology should be addressed to: Desk Officer for Agriculture, Office of Information and Regulatory Affairs, Office of Management and Budget (OMB), Washington, DC 20503 *and* to Departmental Clearance Office, USDA, OCIO, Mail Stop 7602, Washington, DC 20250–7602. Comments regarding these information collections are best assured of having their full effect if received within 30 days of this notification. Copies of the submission(s) may be obtained by calling (202) 720–6746.

An agency may not conduct or sponsor a collection of information unless the collection of information displays a currently valid OMB control number and the agency informs potential persons who are to respond to the collection of information that such persons are not required to respond to the collection of information unless it displays a currently valid OMB control number.

National Agricultural Statistics Service

Title: Respondent Information Evaluation.

OMB Control Number: 0535–New.

Summary of Collection: The National Agricultural Statistics Service's (NASS) primary function is to prepare and issue state and national estimates of crop and livestock production. Preparation of these estimates requires voluntary cooperation from thousands of crop and livestock producers regarding their operations each year. A serious threat to NASS data quality is nonresponse to surveys. NASS is initiating a coordinated effort to increase voluntary survey cooperation. This effort requires the collection of information on how NASS data is used and what data and services would be helpful in the future.

Need and Use of The Information: Information about the many uses of NASS reports will be used to enlist the cooperation of producers whose information the reports are based on. Public forums with producers will be used to develop potential educational material for use in conjunction with ongoing NASS survey programs. These materials will be tested in a variety of formats suited to different channels of communications with respondents including interviewers, State Statistical Office personnel, survey questionnaires, releases and publications, print and broadcast media, and educational settings.

Description of Respondents: Business or other for-profit.

Number of Respondents: 11,717.

Frequency of Responses: Reporting: Quarterly; annually.

Total Burden Hours: 572.

Grain Inspection, Packers and Stockyards Administration

Title: ''Clear Title'' Regulations to Implement Section 1324 of the Food Security Act of 1985.

OMB Control Number: 0580–0016.

Summary of Collection: In conjunction with Section 1324 of the Food Security Act of 1985, the Grain Inspection, Packers and Stockyards Administration (GIPSA), on behalf of the Secretary of Agriculture, is authorized to certify State central filing systems. The central filing systems are necessary in certain states to notify buyers of farm products of any mortgages or liens on the products. Information is collected from State agencies describing their proposed central filing systems.

Need and Use of the Information: GIPSA uses the information supplied by State agencies to carry out the Secretary's responsibility for determining whether a State's central filing system for notification of buyers of farm products of any mortgages or liens on the products meets certification requirements under Section 1324 of the Food Security Act of 1985.

Description of Respondents: State, Local or Tribal Government.

Number of Respondents: 1.

Frequency of Responses: Reporting: On occasion.

Total Burden hours: 12.

Food and Nutrition Service

Title: Issuance Reconciliation Report: FNS–46.

OMB Control Number: 0584–0080.

Summary of Collection: The Food and Nutrition Service (FNS), on behalf of the Secretary of Agriculture, administers the Food Stamp Program through State agencies. These State agencies are accountable for issuance and control of food stamp coupons. Accordingly, States are liable to USDA for any financial losses involved in the acceptance, storage, and issuance of food stamp coupons. Information is required from State agencies on wrongfully issued benefits including undocumented issuances, and returned benefits, stolen and transacted accountable issuance documents, replacement benefits, and obligations from the exchange of food stamp coupons for any reason.

Need and Use of the Information: FNS provides the FNS–46 form, Issuance Reconciliation Report, for State agencies to use in reporting reconciliation results from analyzes of the benefit issuances for all issuance systems with the record-for-issuance file. FNS uses this information to assess liability and to determine billing amounts.

Description of Respondents: State, Local or Tribal Government.

Number of Respondents: 388.

Frequency of Responses: Reporting: Monthly.

Total Burden hours: 37,248.

National Agricultural Statistics Service

Title: Beef Cattle Pesticide Use.

OMB Control Number: 0535–NEW.

Summary of Collection: The National Agricultural Statistics Service (NASS) has been asked by Colorado State University (CSU) to conduct a Beef Cattle Pesticide Use Survey in 12 Western States. The survey is designed to provide information on insecticides applied to beef cattle, insecticides used for cattle facilities, and non-pesticide insect management practices. Data collected will help provide quality information to fulfill certain requirements of the food Quality Protection Act of 1996. In order to do an effective risk assessment, accurate pesticide use information is essential. CSU will use the results from this survey to produce a Pesticide Benefit Assessments report for the Environmental Protection Agency (EPA). Information from this report will aid the EPA in evaluating the risks and the benefits of pesticide use.

Need and Use of the Information: NASS will collect data to develop a uniform survey system to determine the amount of active ingredients from insecticides applied to beef cattle and beef cattle facilities and to measure pest management practices on beef cattle. Data from the survey will provide the necessary insecticide use data needed by EPA. The data will provide factual information on the level of insecticide use and types of pest prevention measures being implemented.

Description of Respondents: Farm.

Number of Respondents: 2,000.

Frequency of Responses: Reporting: Other (One-time).

Total Burden hours: 467

National Agricultural Statistics Service

Title: Agricultural Prices.

OMB Control Number: 0535–0003.

Summary of Collection: Estimates of prices received by farmers and prices paid for production goods and services are needed by the U.S. Department of Agriculture, National Agricultural Statistics Service (NASS), to compute Parity Prices in accordance with requirements of the Agricultural Adjustment Act of 1938 as amended (Title III, Subtitle A, Section 301a) and estimate value of production, inventory values, and cash receipts from farming.

In addition, NASS provides commodity product prices used in the calculation of the Basic Formula Prices for Milk, determines the level for farmer owned reserves and provides guidelines for Risk Management Agency price selection options and determines Federal disaster prices to be paid and the grazing fee on Federal lands. General authority for these data collection activities is granted under U.S. Code Title 7, Section 2204. This status specifies that ''The Secretary of Agriculture shall procure and preserve all information concerning agriculture which he can obtain by the collection of statistics * * * and shall distribute them among agriculturalists''.

Need and Use of the Information: The NASS price program has undergone significant modifications including the updating of weights and changing the construction of prices and paid by farmers indexes. The indexes are used in computing the parity prices that NASS is required by statute to publish monthly. Parity prices are used to establish and maintain Federal Market Orders. Currently, there are 41 market orders that use these prices.

Description of Respondents: Business or other for-profit; farm.

Number of Respondents: 19,387.

Frequency of Responses: Reporting: On occasion; monthly; annually.

Total Burden Hours: 14,484.

Animal Plant and Health Inspection Service

Title: Exotic Newcastle Disease in Birds and Poultry; Chlamydiosis in Poultry.

OMB Control Number: 0579–0016.

Summary of Collection: Title 21, U.S.C. authorizes the United States Department of Agriculture and the Animal Plant and Health Inspection Service (APHIS) to take necessary actions to prevent, control and eliminate domestic diseases, as well as to prevent and to manage non-domestic diseases such as exotic Newcastle disease (END) and Chlamydiosis. Disease prevention is the most effective method for maintaining a healthy animal population and for enhancing our ability to compete in the world market of animals and animal product trade.

Need and Use of the Information: APHIS will collect information through the use of documents attesting to the health status of the birds or poultry being moved, the number and types of birds or poultry being moved in a particular shipment, the shipment's point of origin, the shipment's destination, and the reason for the interstate movement. These documents also provide useful ''traceback'' information in the event an infected bird or chicken is discovered and an investigation must be launched to determine where the bird or chicken originated. The information provided by these documents is critical to APHIS' ability to prevent the interstate spread of Exotic Newcastle Disease, which is highly contagious and capable of causing significant economic harm to the U.S. poultry industry.

Description of Respondents: Business or other for-profit; Individuals or households; farms; State, Local or Tribal Government.

Number of Respondents: 45.

Frequency of Responses: Reporting: On occasion.

Total Burden Hours: 21.

Food and Nutrition Service

Title: Study of WIC Participants and Program Characteristics: 1998 and 2000.

OMB Control Number: 0584–New.

Summary of Collection: Section 17(g)(5) of the Child Nutrition Act of 1996 as amended through Public Law 105–24, July 3, 1997, authorizes the Food and Nutrition Service (FNS) to manage the Special Supplement Nutrition Program for Women, Infants, and Children (WIC) which was created by the Congress in 1972 as an adjunct to health care for low-income pregnant, postpartum, and breastfeeding women as well as for low-income infants and children (up to age five) who are at nutritional risk. The WIC Program provides nutritious food, nutritional needs of these individuals and to prevent health problems associated with poor nutrition during pregnancy and early childhood. The purpose of the 1998 and 2000 studies of WIC participant and program characteristics (PC98 and PC2000) are to collect data, to prepare a report, and to develop a set of analysis files on the characteristics of WIC participants and programs. The data collected for the study will be used by FNS to manage the WIC Program, prepare WIC budgets, answer specific analytic questions, and guide future research.

Need and Use of the Information: FNS will collect information through the use of questionnaires, surveys, and applications on the income and nutritional risk characteristics of WIC participants; data on WIC program participation for migrant farm worker families; and other information on WIC participation that is deemed appropriate by the Secretary of Agriculture. The information collected in the study will be used by FNS for general program monitoring such as reviewing State budget submissions and fiscal reports. Access to current data is crucial to meeting other management information needs such as preparing federal budget estimates, responding to congressional inquiries, and developing appropriate research initiatives for the WIC Program.

Description of Respondents: State, Local, or Tribal Government.

Number of Respondents: 447.

Frequency of Responses: Reporting: Biennially.

Total Burden Hours: 105.

Nancy Sternberg,

Departmental Information Clearance Officer.

[FR Doc. 98–13694 Filed 5–21–98; 8:45 am]

BILLING CODE 3410–01–M

DEPARTMENT OF AGRICULTURE

Agricultural Research Service

Notice of Intent to Request an Extension of a Currently Approved Information Collection

AGENCY: Agricultural Research Service, USDA.

ACTION: Notice and request for comments.

SUMMARY: In accordance with the Paperwork Reduction Act of 1995 (Pub. L. 104–13) and Office of Management and Budget (OMB) regulations at 5 CFR Part 1320 (60 FR 44978, August 29, 1995), this notice announces the Agricultural Research Service's (ARS) intention to request an extension of a currently approved information collection, Form AD–761, USDA Patent License Application for Government Invention that expires August 31, 1998.

DATES: Comments must be received by July 27, 1998 to be assured of consideration.

ADDITIONAL INFORMATION OR COMMENTS: Contact June Blalock, USDA, ARS, Office of Technology Transfer, Room 415, Building 005, BARC-West, Beltsville, Maryland 20705–2350; Telephone Number 301–504–5989.

SUPPLEMENTARY INFORMATION:

Title: USDA Patent License Application for Government Invention.

OMB Number: 0518–0003.

Expiration Date of Approval: August 31, 1998.

Type of Request: To extend a currently approved information collection.

Abstract: The USDA patent licensing program grants patent licenses to qualified businesses and individuals who wish to commercialize inventions arising from federally supported research. The objective of the program is to use the patent system to promote the utilization of inventions arising from such research. The licensing of federally owned inventions must be done in accordance with the terms, conditions and procedures prescribed under 37 CFR Part 404. Application for a license must be addressed to the Federal agency having custody of the invention. Licenses may be granted but only if the license applicant has supplied the Federal agency with a satisfactory plan for the development and marketing of the invention and with information about the applicant's capability to fulfill the plan. 37 CFR 404.8 sets forth the information which must be provided by a license applicant. For the convenience of the applicant, USDA has itemized the information needed on Form AD–761, and instructions for completing the form are provided to the applicant. The information submitted is used to determine whether the applicant has both a complete and sufficient plan for developing and marketing the invention and the necessary manufacturing, marketing, technical and financial resources to carry out the submitted plan.

Estimate of Burden: Public reporting burden for this collection of information is estimated to average 3 hours per response.

Description of Respondents: Businesses or other for profit individuals.

Estimated Number of Respondents: 150.

Frequency of Responses: One time per invention.

Estimated Total Annual Burden on Respondents: 450 hours.

Copies of this information collection and related instructions can be obtained without charge from June Blalock, USDA, ARS, Office of Technology Transfer by calling 301–504–5989.

Comments

Comments are invited on (a) whether the proposed collection of information is necessary for the proper performance of the functions of the agency, including whether the information will have practical utility; (b) the accuracy of the agency's estimate of the burden of the proposed collection of information including the validity of the methodology and assumptions used; (c) ways to enhance the quality, utility, and clarity of the information to be collected; and (d) ways to minimize the burden of the collection of information on those who are to respond, such as through the use of appropriate automated, electronic, mechanical, or other technological collection techniques or other forms of information technology. Comments may be sent to: June Blalock, USDA, ARS, Office of Technology Transfer, Room 415, Bldg. 005, BARC-West, Beltsville, Maryland 20705–2350. All responses to this notice will be summarized and included in the request for OMB approval. All comments will also become a matter of public record.

Richard M. Parry, Jr.,

Assistant Administrator.

[FR Doc. 98–13770 Filed 5–21–98; 8:45 am]

BILLING CODE 3410–03–P

DEPARTMENT OF AGRICULTURE

Animal and Plant Health Inspection Service

[Docket No. 98–039–1]

Notice of Request for Extension of Approval of an Information Collection

AGENCY: Animal and Plant Health Inspection Service, USDA.

ACTION: Extension of approval of an information collection; comment request.

SUMMARY: In accordance with the Paperwork Reduction Act of 1995, this notice announces the Animal and Plant Health Inspection Service's intention to request an extension of approval of an information collection in support of the regulations for the importation of logs, lumber, and other unmanufactured wood articles.

DATES: Comments on this notice must be received by July 21, 1998 to be assured of consideration.

ADDRESSES: Send comments regarding the accuracy of burden estimate, ways to minimize the burden (such as through the use of automated collection techniques or other forms of information technology), or any other aspect of this collection of information to: Docket No. 98–039–1, Regulatory Analysis and Development, PPD, APHIS, suite 3C03, 4700 River Road, Unit 118, Riverdale, MD 20737–1238. Please send an original and three copies, and state that your comments refer to Docket No. 98–039–1. Comments received may be inspected at USDA, room 1141, South Building, 14th Street and Independence Avenue SW., Washington, DC, between 8 a.m. and 4:30 p.m., Monday through Friday, except holidays. Persons wishing to inspect comments are requested to call ahead on (202) 690–2817 to facilitate entry into the comment reading room.

FOR FURTHER INFORMATION CONTACT: For information regarding the regulations for the importation of logs, lumber, and other unmanufactured wood articles, contact Mr. Ronald C. Campbell, Staff Officer, Phytosanitary Issues Management, PPQ, APHIS, 4700 River Road, Unit 139, Riverdale, MD 20737–1236, (301) 734–6799. For copies of more detailed information on the information collection, contact Ms. Cheryl Groves, APHIS, Information Collection Coordinator, at (301) 734–5086.

SUPPLEMENTARY INFORMATION:

Title: Foreign Quarantine Notices, Logs and Lumber.

OMB Number: 0579–0119.

Expiration Date of Approval: September 30, 1998.

Type of Request: Extension of approval of an information collection.

Abstract: The Animal and Plant Health Inspection Service (APHIS) of the United States Department of Agriculture is responsible for, among other things, preventing the introduction and dissemination of plant pests into or through the United States. As part of this responsibility, APHIS regulates the importation of logs, lumber, and other unmanufactured wood articles.

In administering the regulations, we collect information from persons both within and outside the United States who are involved in growing, handling, processing, transporting, and importing unmanufactured wood articles. The information is provided on a number of forms and other documents, including applications for permits, various accompanying importer documents or certificates, notices of arrival, and compliance agreements. This information is vital to ensure that unmanufactured wood articles imported into the United States do not harbor plant pests.

We are asking the Office of Management and Budget (OMB) to approve the continued use of this information collection activity.

The purpose of this notice is to solicit comments from the public (as well as affected agencies) concerning our information collection. We need this outside input to help us:

(1) Evaluate whether the proposed collection of information is necessary for the proper performance of the functions of the Agency, including whether the information will have practical utility;

(2) Evaluate the accuracy of our estimate of the burden of the proposed collection of information, including the validity of the methodology and assumptions used;

(3) Enhance the quality, utility, and clarity of the information to be collected; and

(4) Minimize the burden of the collection of information on those who are to respond, through use, as appropriate, of automated, electronic, mechanical, and other collection technologies, e.g., permitting electronic submission of responses.

Estimate of burden: The public reporting burden for this collection of information is estimated to average .15078 hours per response.

Respondents: Importers, processors, shippers, foreign plant health protection authorities.

Estimated annual number of respondents: 80,005.

Estimated annual number of responses per respondent: 12.530.

Estimated annual number of responses: 1,002,472.

Estimated total annual burden on respondents: 151,152 hours. (Due to rounding, the total annual burden hours may not equal the product of the annual number of responses multiplied by the average reporting burden per response.)

All responses to this notice will be summarized and included in the request for OMB approval. All comments will also become a matter of public record.

Done in Washington, DC, this 18th day of May 1998.

Charles P. Schwalbe,

Acting Administrator, Animal and Plant Health Inspection Service.

[FR Doc. 98–13769 Filed 5–21–98; 8:45 am]

BILLING CODE 3410–34–P

DEPARTMENT OF AGRICULTURE

Forest Service

Proposed North Round Valley Timber Sale, Rapid River Roadless Area, Payette National Forest, Adams County, Idaho

AGENCY: Forest Service, USDA.

ACTION: Revised Notice of Intent to Prepare an Environmental Impact Statement.

SUMMARY: The USDA Forest Service published a Revised Notice of Intent to prepare an environmental impact statement (EIS) for the Lockwood and North Valley Timber Sales in the **Federal Register** on December 19, 1991 (Vol. 56, No. 244, page 65881). That revised notice is hereby revised to show three changes: (1) Separate EIS's for each proposed timber sale, (2) the name of the EIS's, and (3) the schedule for the North Round Valley Timber Sale EIS.

(1) The Lockwood and North Round Valley Timber Sales Draft EIS was released in January 1992. A Final EIS was completed in 1993 but was never released to the public because of the listing of Chinook salmon and subsequent delays with consultation under the Endangered Species Act. During the large wildfires on the Forest in 1994, the interdisciplinary team assigned to the Lockwood/North Round Valley projects was disbanded, and the Final EIS was put on hold through the post-fire landscape and salvage analyses conducted in 1994 and 1995. In 1996, the Forest formed a new interdisciplinary team to complete the Final EIS and to analyze changed conditions since 1993. As part of the analysis, the team recommended that the two timber sales be separated into two EIS's primarily due to differences in the level of effects and controversy associated with each project.

(2) This Revised Notice of Intent covers the proposed North Round Valley Timber Sale. A separate Revised Notice of Intent will be prepared for the proposed Lockwood Timber Sale.

(3) The North Round Valley Timber Sale Final EIS is scheduled to be released in the spring or early summer of 1998. The exact date will depend on when consultation on threatened and proposed species is completed with the National Marine Fisheries Services and U.S. Fish and Wildlife Service.

ADDRESSES: Send written comments or requests to David Alexander, Forest Supervisor, Payette National Forest, P.O. Box 1026, McCall, Idaho 83638.

FOR FURTHER INFORMATION CONTACT: Questions about the action should be directed to David Ede, Team Leader, at (208) 347–0331; or Kimberly Brandel, New Meadows District Ranger, at (208) 347–0300.

SUPPLEMENTARY INFORMATION: The USDA Forest Service is proposing to harevest and regenerate timber in the North Round Valley Timber Sale on the New Meadows Ranger District of the Payette National Forest in Adams County, Idaho. The area is located in the Round Valley Creek and Trail Creek subwatersheds, which drain into the Little Salmon River

The Preferred Alternative would harvest an estimated 184 acres with shelterwood prescriptions designed to thin out overstocked stands of mostly grand fir, which would leave a healthy overstory of mixed species that are within the historic range of variability for this area. Proposed logging systems include tractor and helicopter. Proposed harvest units are on or near existing roads, so no new road would be constructed. An estimated 0.5 mile of existing road would be reconstructed. All reconstructed road would be closed following sale-related activities. In addition, 6.3 miles of currently open roads in the Round Valley Creek subwatershed would be closed year-round to public motorized vehicles, and 4.0 miles of existing roads would be obliterated. Closures and obliteration would improve wildlife habitat and water quality over the long term.

An estimated 125 acres would be harvested in the Rapid River Roadless Area (0.6 percent of the roadless area), but no new road construction or reconstruction would occur in the roadless area. Three roadless units (90 acres) would be harvested by helicopter, and two roadless units would be tractor-

skidded to nearby existing roads. This portion of the roadless area is a narrow finger with roads and harvest units on three sides, which currently has relatively low potential for wilderness.

The responsible Official is David F. Alexander, Forest Supervisor, Payette National Forest.

Dated: May 11, 1998.

David F. Alexander,

Forest Supervisor.

[FR Doc. 98–13686 Filed 5–21–98; 8:45 am]

BILLING CODE 3410–11–M

DEPARTMENT OF AGRICULTURE

Forest Service

Southwest Oregon Provincial Interagency Executive Committee (PIEC); Advisory Committee

AGENCY: Forest Service, USDA.

ACTION: Notice of meeting.

SUMMARY: The Southwest Oregon PIEC Advisory Committee will meet on June 1 at the Medford District of the Bureau of Land Management at 3040 Biddle Road, Medford, Oregon.

The meeting will begin at 9:00 a.m. and continue until 5:00 p.m. Agenda items to be covered include: (1) Coordinated watershed restoration between federal and non-federal land managers; (2) Province monitoring priorities; (3) Forest health issues; (4) Report from local BLM and Forest Service on local issues; (5) Coarse Wood Management evaluation process; (6) Review of Committee operating guides; and (7) Public comment. All Province Advisory Committee meetings are open to the public.

FOR FURTHER INFORMATION CONTACT: Direct questions regarding this meeting to Chuck Anderson, Province Advisory Committee staff, USDA, Forest Service, Rogue River National Forest, 333 W. 8th Street, Medford, Oregon 97501, phone 541–858–2322.

Dated: May 12, 1998.

Charles J. Anderson,

Acting Forest Supervisor, Designated Federal Official.

[FR Doc. 98–13755 Filed 5–21–98; 8:45 am]

BILLING CODE 3410–11–M

DEPARTMENT OF AGRICULTURE

Natural Resources Conservation Service

New York City Watershed, Delaware, Schoharie, Greene, Ulster, and Sullivan Counties, New York State

AGENCY: Natural Resources Conservation Service.

ACTION: Notice of a Finding of No Significant Impact.

SUMMARY: Pursuant to Section 102(2)(c) of the National Environmental Policy Act of 1969; the Council on Environmental Quality Regulations (40 CFR Part 1500); and the Soil Conservation Service Regulations (7 CFR Part 650); the Natural Resources Conservation Service, U.S. Department of Agriculture, gives notice that an environmental impact statement is not being prepared for the New York City Watershed, Delaware, Schoharie, Greene, Ulster, and Sullivan Counties, New York State.

FOR FURTHER INFORMATION CONTACT: Richard D. Swenson, State Conservationist, Natural Resources Conservation Service, 441 S. Salina St., Suite 354, Syracuse, New York 13202–2450, telephone 315/477–6504.

SUPPLEMENTARY INFORMATION: The environmental assessment of this federally assisted action indicates that the project will not cause significant local, regional, or national impacts on the environment. As a result of these findings, Richard D. Swenson, State Conservationist, has determined that the preparation and review of an environmental impact statement are not needed for this project.

The project purposes are enhance existing programs and to develop new ones that will protect the drinking water supply of New York City. The planned works of improvement include better forestry practices, conservation easements, resource data inventory, technology development, education/outreach, and operation and maintenance of whole farm plans.

The Notice of a Finding of No Significant Impact (FONSI) has been forwarded to the Environmental Protection Agency and to various Federal, State, and local agencies and interested parties. A limited number of copies of the FONSI are available to fill single copy requests at the above address. Basic data developed during the environmental assessment are on file and may be reviewed by contacting Richard D. Swenson. No administrative action on implementation of the proposal will be taken until 30 days after the date of this publication in the **Federal Register**.

(This activity is listed in the Catalog of Federal Domestic Assistance under NO. 10.904, Watershed Protection and Flood Prevention, and is subject to the provisions of Executive Order 12372, which requires intergovernmental consultation with State and local officials.)

Melvin Womack,

Acting State Conservationist.

[FR Doc. 98–13685 Filed 5–21–98; 8:45 am]

BILLING CODE 3410–16–P

DEPARTMENT OF AGRICULTURE

Natural Resources Conservation Service

Task Force on Agricultural Air Quality; Meeting

AGENCY: Natural Resources Conservation Service.

ACTION: Notice of meeting.

SUMMARY: The Task Force on Agricultural Air Quality will meet to discuss the relationship between agricultural production and air quality. The meeting is open to the public.

DATES: The meeting will convene Wednesday, June 17, 1998, at 8:30 a.m. and continue until 5:00 p.m. The meeting will resume Thursday, June 18, 1998, from 8:30 a.m. to 5:00 p.m. Written material and requests to make oral presentations should reach the Natural Resources Conservation Service on or before June 12, 1998.

ADDRESSES: The meeting will be held at the Doubletree Spokane City Center Hotel, 322 North Spokane Falls Court, Spokane, Washington 99201, telephone (509) 455–9600. Written material and requests to make oral presentations should be sent to George Bluhm, University of California, Land, Air, Water Resources, 151 Hoagland Hall, Davis, CA 95616–6827.

FOR FURTHER INFORMATION CONTACT: George Bluhm, Designated Federal Official, telephone (916) 752–1018, fax (916) 752–1552.

SUPPLEMENTARY INFORMATION: Notice of this meeting is given under the Federal Advisory Committee Act, 5 U.S.C. App. 2. Additional information about the Task Force on Agricultural Air Quality, including any revised agendas for the June 17–18, 1998, meeting that may appear after this **Federal Register** Notice is published, may be found on the World Wide Web at http://www.nhq.nrcs.usda.gov/faca/aaqtf.html.

Draft Agenda of the June 17–18, 1998, Meeting

A. Opening Remarks
1. Call meeting to order—George Bluhm, DFO
2. Introduce Chairperson and Chief of NRCS—Pearlie Reed
3. Welcome to Washington research—Keith Saxton
4. Welcome to Washington NRCS operations—Leonard Jordan, STC

B. Past Actions
1. Air quality within USDA—Pearlie Reed
2. Extension of Federal Advisory Committee Act Committee—George Bluhm
3. Revised recommendations on air quality research needs—Jim Trotter
4. USDA Air Quality Research Management Team—Richard Amerman, Berlie Schmidt

C. Status Reports
1. Agricultural Burning Subcommittee—Robert Quinn
2. Model MOU—volunteer program with bad actor clause—Dennis Tristao
3. EPA emission factors, communication with EMAD—Emmett Barker, Sally Shaver
4. Health effects—Thomas Ferguson
5. NRCS Air Resource Action Plan—George Bluhm
6. Particulate matter research issues—Robert Flocchini, Keith Saxton

D. New Issues
1. Conservation application and carbon sequestration in Iowa—Dr. Keith Paustian, Colorado State University
2. Air quality initiative, Research Subcommittee—Jim Trotter
3. Forest research on air quality—Bill Summers
4. Washington State CRP—Leonard Jordan
5. A Natural Events Action Plan for Eastern Washington—EPA Region X and Washington State Department of Ecology
6. Agricultural residue burning: needs and impacts on regional agriculture—regional grass seed and cereal producers, Washington State Department of Ecology

E. Set Date and Location for Next Meeting

F. Public Input

Procedural

This meeting is open to the public. At the discretion of the Chair, members of the public may present oral presentations during the June 17–18 meeting. Persons wishing to make oral presentations should notify George Bluhm no later than June 12, 1998. If a person submitting material would like a copy distributed to each member of the committee in advance of the meeting, that person should submit 25 copies to George Bluhm no later than June 12, 1998.

Information on Services for Individuals With Disabilities

For information on facilities or services for individuals with disabilities or to request special assistance at the meeting, contact George Bluhm as soon as possible.

Dated: April 15, 1998.

Danny D. Sells,

Associate Chief, Natural Resurces Conservation Service.

[FR Doc. 98–13670 Filed 5–21–98; 8:45 am]

BILLING CODE 3014–16–P

APPALACHIAN STATES LOW-LEVEL RADIOACTIVE WASTE COMMISSION

Meeting

TIME AND DATE: 9:00 a.m.–1:00 p.m., June 18, 1998.

PLACE: Harrisburg Hilton and Towers, One North Second Street, Harrisburg, PA 17101

STATUS: Most of the meeting will be open to the public. An executive session closed to the public will be held from about 9:15 a.m. to 10:00 a.m.

MATTERS TO BE CONSIDERED:

Portions Open to the Public: The primary purpose of this meeting is to hear a status report on the siting of the regional disposal facility; hear a report on the expenditure of a $2 million grant to the Pennsylvania Department of Environmental Protection (PADEP); consider the impact of high volume low-activity waste shipped to Envirocare of Utah; consider granting about $462,000 to the PADEP to continue the community partnering program; consider adoption of an interregional agreement for the uniform application of manifesting procedures; consider a revised budget for 1998–99; consider a budget for 1999–2000; and to elect officers.

Portions Closed to the Public: Executive Session from about 9:15 a.m. to 10:00 a.m. to discuss a personnel matter.

CONTACT PERSON FOR MORE INFORMATION: Marc S. Tenan, Executive Director, at 717–234–6295.

Marc S. Tenan,

Executive Director.

[FR Doc. 98–12574 Filed 5–21–98; 8:45 am]

COMMITTEE FOR PURCHASE FROM PEOPLE WHO ARE BLIND OR SEVERELY DISABLED

Procurement List; Additions and Deletions

AGENCY: Committee for Purchase From People Who Are Blind or Severely Disabled.

ACTION: Additions to and deletions from the Procurement List.

SUMMARY: This action adds to the Procurement List a commodity and services to be furnished by nonprofit agencies employing persons who are blind or have other severe disabilities, and deletes from the Procurement List commodities and a service previously furnished by such agencies.

EFFECTIVE DATE: June 22, 1998.

ADDRESSES: Committee for Purchase From People Who Are Blind or Severely Disabled, Crystal Gateway 3, Suite 310, 1215 Jefferson Davis Highway, Arlington, Virginia 22202–4302.

FOR FURTHER INFORMATION CONTACT: Beverly Milkman (703) 603–7740.

SUPPLEMENTARY INFORMATION: On January 5, April 3 and 20, 1998, the Committee for Purchase From People Who Are Blind or Severely Disabled published notices (63 FR 203, 16470 and 19474) of proposed additions to and deletions from the Procurement List:

Additions

The following comments pertain to Shirt, Sleeping.

Comments were received from the current contractor for the sleeping shirts. The contractor indicated that the shirts are an important part of one of its plants' production during certain months of the year.

While these shirts may be important to one of the contractor's three plants for part of the year, the Committee looks at the overall impact of a Procurement List addition on the contractor's total sales when it makes its impact determinations. The impact of this addition on the contractor's total sales is very small, and well below the level which the Committee normally considers to be severe adverse impact. The Committee is only adding ten percent of the Government requirement for the shirts to the Procurement List at this time, which will leave 50 percent of the requirement available for competitive procurement from this contractor or its competitors. The Committee's earlier addition to the Procurement List of 40 percent of the Government requirement caused only a slight decline in the contractor's sales. Consequently, the Committee does not believe that addition of the sleeping shirts to the Procurement List will have a severe adverse impact on the contractor.

The following comments pertain to Central Facility Management, The Jimmy Carter Presidential Library, Atlanta, Georgia.

Comments were received from the current contractor for this service. The contractor noted that it expects a severe reduction in its total sales during this

year, due to cutbacks in Government funding for services such as those it provides and that, consequently, loss of this contract to the Procurement List would have a severe adverse impact on the company. The contractor further noted that it is in its eighth year of providing this service at this location. The contractor's projections assume that when the contracts it currently holds are re-bid to reduce the costs, it will not succeed in obtaining any of the new contracts. The Committee views this as an unrealistically pessimistic projection. Under the circumstances, even taking into account the contractor's greater dependence on this relatively small contract after eight years and the impact of another recent addition to the Procurement List, the Committee does not believe that the percentage of the firm's sales represented by this contract is substantial enough to result in a severe adverse impact on the contractor.

The following comments pertain to Food Service and Food Service Attendant, Postwide, Fort Hood, Texas.

Comments were received from the current contractor for this service. The contractor claimed that the addition of the service to the Procurement List would have a severe adverse impact on the contractor as it represents a substantial portion of the contractor's sales. The contractor also noted that it is performing the contract under the Small Business Administration's (SBA) 8(a) Program, that the service has been in the 8(a) Program for a while, and that addition of the service to the Procurement List would foreclose future 8(a) Program participants from performing the contract.

The Government contracting activity responsible for this service has informed the Committee that if the Committee does not add the service to the Procurement List, the service will remain in the 8(a) Program. The contractor will graduate from the 8(a) Program in June, 1998, so it would not be eligible for subsequent contracts for the service whether or not the Committee adds it to the Procurement List. Consequently, any impact the contractor suffers will not be a result of the addition of the service to the Procurement List.

The Committee's Javits-Wagner-O'Day (JWOD) Program, like the 8(a) Program, is the result of Congressional desire to use the Federal procurement system to assist specific disadvantaged groups. The JWOD Program's target population, people who are blind or have severe disabilities, has an unemployment rate well above that of other groups. Consequently, the Committee believes it should maximize the creation of jobs for its target population where it can do so within the limits of its statute and regulations. The 8(a) Program is considerably larger than the JWOD Program and, because it imposes no constraints on the types of individuals employed by participating firms, has access to a broader range of contracts than does the JWOD Program. Consequently, the Committee believes the 8(a) Program can more easily locate contracting opportunities for its target population than the JWOD Program can.

After consideration of the material presented to it concerning capability of qualified nonprofit agencies to provide the commodity and services and impact of the additions on the current or most recent contractors, the Committee has determined that the commodity and services listed below are suitable for procurement by the Federal Government under 41 U.S.C. 46–48c and 41 CFR 51–2.4.

I certify that the following action will not have a significant impact on a substantial number of small entities. The major factors considered for this certification were:

1. The action will not result in any additional reporting, recordkeeping or other compliance requirements for small entities other than the small organizations that will furnish the commodity and services to the Government.

2. The action will not have a severe economic impact on current contractors for the commodity and services.

3. The action will result in authorizing small entities to furnish the commodity and services to the Government.

4. There are no known regulatory alternatives which would accomplish the objectives of the Javits-Wagner-O'Day Act (41 U.S.C. 46–48c) in connection with the commodity and services proposed for addition to the Procurement List.

Accordingly, the following commodity and services are hereby added to the Procurement List:

Commodity

Shirt, Sleeping
8415–00–890–2099
8415–00–890–2100
8415–00–890–2101
8415–00–890–2102
8415–00–890–2103
8415–00–935–6855
(Additional 10% of the Government's requirement)

Services

Base Supply Center, Tinker Air Force Base, Oklahoma

Central Facility Management, The Jimmy Carter Presidential Library, Atlanta, Georgia

Food Service and Food Service Attendant, Postwide, Fort Hood, Texas

Janitorial/Custodial, VA Outpatient Clinic, Winston-Salem, North Carolina

Janitorial/Custodial, Surface Warfare Officer School Navy Buildings, 52 C.H.I., 138 C.H.I., 370 C.P., 446 C.P., 1164 C.H.I., 1183 C.H.I., 1268 C.H.I. & 1284 C.H.I, Newport, Rhode Island

This action does not affect current contracts awarded prior to the effective date of this addition or options that may be exercised under those contracts.

Deletions

I certify that the following action will not have significant impact on a substantial number of small entities. The major factors considered for this certification were:

1. The action will not result in any additional reporting, recordkeeping or other compliance requirements for small entities.

2. The action will not have a severe economic impact on future contractors for the commodities and service.

3. The action will result in authorizing small entities to furnish the commodities and service to the Government.

4. There are no known regulatory alternatives which would accomplish the objectives of the Javits-Wagner-O'Day Act (41 U.S.C. 46–48c) in connection with the commodities and service deleted from the Procurement List.

After consideration of the relevant matter presented, the Committee has determined that the commodities and service listed below are no longer suitable for procurement by the Federal Government under 41 U.S.C. 46–48c and 41 CFR 51–2.4.

Accordingly, the following commodities and service are hereby deleted from the Procurement List:

COMMODITIES

Cover, Generator Set
6115–00–945–7545

Cabinet, Storage
7125–00–378–4261
7125–00–449–6862
7125–00–693–4352

Pillowcase
7210–00–081–1380

Service

Commissary Shelf Stocking and Custodial, Naval Station, Charleston, South Carolina.

Beverly L. Milkman,

Executive Director.

[FR Doc. 98–13728 Filed 5–21–98; 8:45 am]

BILLING CODE 6353–01–P

COMMITTEE FOR PURCHASE FROM PEOPLE WHO ARE BLIND OR SEVERELY DISABLED

Procurement List; Proposed Additions and Deletions

AGENCY: Committee for Purchase From People Who Are Blind or Severely Disabled.

ACTION: Proposed additions to and deletions from Procurement List.

SUMMARY: The Committee has received proposal(s) to add to the Procurement List services to be furnished by nonprofit agencies employing persons who are blind or have other severe disabilities, and to delete services previously furnished by such agencies.

COMMENTS MUST BE RECEIVED ON OR BEFORE: June 22, 1998.

ADDRESSES: Committee for Purchase From People Who Are Blind or Severely Disabled, Crystal Gateway 3, Suite 310, 1215 Jefferson Davis Highway, Arlington, Virginia 22202–4302.

FOR FURTHER INFORMATION CONTACT: Beverly Milkman (703) 603–7740.

SUPPLEMENTARY INFORMATION: This notice is published pursuant to 41 U.S.C. 47(a)(2) and 41 CFR 51–2.3. Its purpose is to provide interested persons an opportunity to submit comments on the possible impact of the proposed actions.

Additions

If the Committee approves the proposed addition, all entities of the Federal Government (except as otherwise indicated) will be required to procure the services listed below from nonprofit agencies employing persons who are blind or have other severe disabilities.

I certify that the following action will not have a significant impact on a substantial number of small entities. The major factors considered for this certification were:

1. The action will not result in any additional reporting, recordkeeping or other compliance requirements for small entities other than the small organizations that will furnish the services to the Government.

2. The action does not appear to have a severe economic impact on current contractors for the services.

3. The action will result in authorizing small entities to furnish the services to the Government.

4. There are no known regulatory alternatives which would accomplish the objectives of the Javits-Wagner-O'Day Act (41 U.S.C. 46–48c) in connection with the services proposed for addition to the Procurement List. Comments on this certification are invited. Commenters should identify the statement(s) underlying the certification on which they are providing additional information.

The following services have been proposed for addition to Procurement List for production by the nonprofit agencies listed:

Grounds Maintenance

Mifflin County USARC, Lewistown, Pennsylvania
NPA: Juniata Assocation for the Blind, Lewistown, Pennsylvania

Medical Transcription

97th Medical Group, Altus AFB, Oklahoma
NPA: Kentucky Industries for the Blind, Louisville, Kentucky

Deletions

I certify that the following action will not have a significant impact on a substantial number of small entities. The major factors considered for this certification were:

1. The action will not result in any additional reporting, recordkeeping or other compliance requirements for small entities.

2. The action does not appear to have a severe economic impact on future contractors for the services.

3. The action will result in authorizing small entities to furnish the services to the Government.

4. There are no known regulatory alternatives which would accomplish the objectives of the Javits-Wagner-O'Day Act (41 U.S.C. 46–48c) in connection with the services proposed for deletion from the Procurement List.

The following services have been proposed for deletion from the Procurement List:

Grounds Maintenance

Naval Station, Mobile, Alabama

Grounds Maintenance

Portland Air National Guard Base, Portland, Oregon

Janitorial/Custodial

Pacific Highway Border Station, USDA Building, Blaine, Washington

Beverly L. Milkman,

Executive Director.

[FR Doc. 98–13739 Filed 5–21–98; 8:45 am]

BILLING CODE 6353–01–P

COMMITTEE FOR PURCHASE FROM PEOPLE WHO ARE BLIND OR SEVERELY DISABLED

Additions and Deletions to the Procurement List; Correction

In the document appearing on page 24152, F.R. Doc. 98–11628, in the issue of May 1, 1998, in the second column, a door knob conversion kit in 56 different varieties, each denominated by a National Stock Number (NSN), is listed as deleted from the Procurement List, effective June 1, 1998. The Committee voted to delete all 56 varieties of the kit based on information that Government orders did not justify continued production by nonprofit agencies for the blind. In addition, one of the services listed in the same document as deleted from the Procurement List is Grounds Maintenance, Naval and Marine Corps Reserve Center, Dayton, Ohio. The Committee voted to delete this service from the Procurement List based on information that this Reserve Center had closed. Since the May 1, 1998 deletion notice, the Committee has discovered that the Reserve Center has not closed and will remain open for the immediate future. The Committee also discovered that seven varieties of the door knob conversion kit had not been included on the list of NSNs requested for deletion because of a lack of Government orders.

Consequently, the Committee on May 14, 1998 reconsidered its decisions and voted not to delete the seven NSNs of the door knob conversion kit and the grounds maintenance service from the Procurement List. Accordingly, the notice of May 1, 1998 referenced above is corrected to remove Grounds Maintenance, Naval and Marine Corps Reserve Center, Dayton, Ohio from the list of services deleted from the Procurement List. The notice is also corrected to remove the following NSNs from the list of door knob conversion kit NSNs deleted from the Procurement List:

Door Knob Conversion Kit

5340–01–394–0237, 5340–01–394–0238, 5340–01–394–0239, 5340–01–394–

0240, 5340–01–394–0241, 5340–01–394–0242, 5340–01–394–3874

Beverly L. Milkman,

Executive Director.

[FR Doc. 98–13740 Filed 5–21–98; 8:45 am]

BILLING CODE 6353–01–P

COMMISSION ON CIVIL RIGHTS

Agenda and Notice of Public Meeting of the District of Columbia Advisory Committee

Notice is hereby given, pursuant to the provisions of the rules and regulations of the U.S. Commission on Civil Rights, that a meeting of the District of Columbia Advisory Committee to the Commission will convene at 9:30 a.m. and adjourn at 12:30 p.m. on June 9, 1998, at JC Penney, Government Relations Office, Suite 1015, 1156 15th Street NW, Washington, DC 20036. The purpose of the meeting is for the Committee to continue planning for the upcoming press conference to release its report entitled ''Residential Mortgage Lending Disparities in Washington, DC.''

Persons desiring additional information, or planning a presentation to the Committee, should contact Committee Chairperson Steven Sims, 202–862–4815 or Ki-Taek Chun, Director of the Eastern Regional Office, 202–376–7533 (TDD 202–376–8116). Hearing-impaired persons who will attend the meeting and require the services of a sign language interpreter should contact the Regional Office at least ten (10) working days before the scheduled date of the meeting.

The meeting will be conducted pursuant to the provisions of the rules and regulations of the Commission.

Dated at Washington, DC, May 12, 1998.

Carol-Lee Hurley,

Chief, Regional Programs Coordination Unit.

[FR Doc. 98–13659 Filed 5–21–98; 8:45 am]

BILLING CODE 6335–01–P

COMMISSION ON CIVIL RIGHTS

Agenda and Notice of Public Meeting of the Massachusetts Advisory Committee

Notice is hereby given, pursuant to the provisions of the rules and regulations of the U.S. Commission on Civil Rights, that a meeting of the Massachusetts Advisory Committee to the Commission will convene at 10:30 a.m. and adjourn at 3:30 p.m. on June 18, 1998, at the University of Massachusetts at Dartmouth, Room 228, Group Two Building, 285 Old Westport Road, North Dartmouth, Massachusetts 02747. The purpose of the meeting is to: (1) Discuss followup activities of the 3/21/98 conference including report preparation; (2) plan future activities; and (3) receive briefings from city officials and community representatives from Tauton, Fall River, and New Bedford.

Persons desiring additional information, or planning a presentation to the Committee, should contact Committee Chairperson Fletcher Blanchard, 413–585–3786, or Ki-Taek Chun, Director of the Eastern Regional Office, 202–376–7533 (TDD 202–376–8116). Hearing-impaired persons who will attend the meeting and require the services of a sign language interpreter should contact the Regional Office at least ten (10) working days before the scheduled date of the meeting.

The meeting will be conducted pursuant to the provisions of the rules and regulations of the Commission.

Dated at Washington, DC, May 15, 1998.

Carol-Lee Hurley,

Chief, Regional Programs Coordination Unit.

[FR Doc. 98–13663 Filed 5–21–98; 8:45 am]

BILLING CODE 6335–01–P

COMMISSION ON CIVIL RIGHTS

Agenda and Notice of Public Meeting of the Ohio Advisory Committee

Notice is hereby given, pursuant to the provisions of the rules and regulations of the U.S. Commission on Civil Rights, that a meeting of the Ohio Advisory Committee to the Commission will convene at 9:00 a.m. and adjourn at 6:00 p.m. on June 11, 1998, at the Crowne Plaza Hotel, Fifth and Jefferson Street, Dayton, Ohio 45402. The purpose of the meeting is to receive information regarding ''Employment Opportunities for Minorities in Montgomery County, Ohio.''

Persons desiring additional information, or planning a presentation to the Committee, should contact Committee Chairperson Altagracia Ramos, 614–466–6715, or Constance M. Davis, Director of the Midwestern Regional Office, 312–353–8311 (TDD 312–353–8362). Hearing-impaired persons who will attend the meeting and require the services of a sign language interpreter should contact the Regional Office at least ten (10) working days before the scheduled date of the meeting.

The meeting will be conducted pursuant to the provisions of the rules and regulations of the Commission.

Dated at Washington, DC, May 15, 1998.

Carol-Lee Hurley,

Chief, Regional Programs Coordination Unit.

[FR Doc. 98–13662 Filed 5–21–98; 8:45 am]

BILLING CODE 6335–01–P

COMMISSION ON CIVIL RIGHTS

Agenda and Notice of Public Meeting of the Pennsylvania Advisory Committee

Notice is hereby given, pursuant to the provisions of the rules and regulations of the U.S. Commission on Civil Rights, that a meeting of the Pennsylvania Advisory Committee to the Commission will convene at 1:00 p.m. and adjourn at 4:30 p.m. on June 12, 1998, at the Pennsylvania Convention Center (Administrative Level Board Room), East Concourse Entrance, 12th and Arch Street, Philadelphia, Pennsylvania 19107. The purpose of the meeting is to review a draft project proposal and continue planning for a future briefing on barriers confronting women and minority business owners.

Persons desiring additional information, or planning a presentation to the Committee, should contact Committee Chairperson Sieglinde Shapiro, 215–204–6749, or Ki-Taek Chun, Director of the Eastern Regional Office, 202–376–7533 (TDD 202–376–8116). Hearing-impaired persons who will attend the meeting and require the services of a sign language interpreter should contact the Regional Office at least ten (10) working days before the scheduled date of the meeting.

The meeting will be conducted pursuant to the provisions of the rules and regulations of the Commission.

Dated at Washington, DC, May 15, 1998.

Carol-Lee Hurley,

Chief, Regional Programs Coordination Unit.

[FR Doc. 98–13664 Filed 5–21–98; 8:45 am]

BILLING CODE 6335–01–P

DEPARTMENT OF COMMERCE

Bureau of Economic Analysis

Annual Survey of Reinsurance and Other Insurance Transactions by U.S. Insurance Companies With Foreign Persons

ACTION: Proposed collection; comment request.

SUMMARY: The Department of Commerce, as part of its continuing effort to reduce paperwork and respondent burden, invites the general

public and other Federal agencies to comment on proposed and/or continuing information collections, as required by the Paperwork Reduction Act of 1995, Public Law 104–13 (44 U.S.C. 3506(c)(2)(A)).

DATES: Written comments must be submitted on or before July 21, 1998.

ADDRESSES: Direct all written comments to Linda Engelmeier, Departmental Forms Clearance Officer, Department of Commerce, Room 5327, 14th and Constitution Avenue, NW, Washington, DC 20230.

FOR FURTHER INFORMATION CONTACT: Requests for additional information or copies of the information collection instrument and instructions should be directed to: R. David Belli, U.S. Department of Commerce, Bureau of Economic Analysis, BE–50(OC), Washington, DC 20230 (Telephone: 202–606–9800).

SUPPLEMENTARY INFORMATION:

I. Abstract

The BE–48 Annual Survey of Reinsurance and Other Insurance Transactions by U.S. Insurance Companies With Foreign Persons will obtain data from U.S. insurance companies on their reinsurance and other insurance transactions with foreign persons. The information gathered is needed, among other purposes, to support U.S. trade policy initiatives and to compile the U.S. international transactions, input-output, and national income and product accounts. Apart from minor clarifications to the instructions for reporting commissions and changes to the pre-printed list of countries to reflect recent shifts in the geographic composition of cross-border insurance transactions, BEA is not proposing changes to the form or instructions at this time.

II. Method of Collection

The survey will be sent each year to potential respondents in January and responses are due by March 31. A U.S. person who engages in reinsurance transactions with foreign persons or who acts in the capacity of a primary insurer with foreign persons is required to report if, with respect to transactions with foreign persons, any of the following six items equaled or exceeded $1 million (positive or negative) in the reporting period: (1) Premiums earned, and (2) losses, on reinsurance assumed; (3) premiums incurred, and (4) losses, on reinsurance ceded; and (5) premiums earned, and (6) losses, on primary insurance sold. A U.S. person that receives a form but is not required to report data must file an exemption claim.

III. Data

OMB Number: 0608–0016.
Form Number: BE–48.
Type of Review: Regular submission.
Affected Public: U.S. insurance companies or groups engaging in reinsurance or other insurance transactions with foreign persons.
Estimated Number of Responses: 400.
Estimated Time Per Response: 4 hours.
Estimated Total Annual Burden Hours: 1,600.
Estimated Total Annual Cost: $48,000 (based on an estimated reporting burden of 1,600 hours and an estimated hourly cost of $30).

IV. Request for Comments

Comments are invited on: (a) Whether the proposed collection of information is necessary for the proper performance of the functions of the agency, including whether the information has practical utility; (b) the accuracy of the agency's estimate of the burden (including hours and cost) of the proposed collection of information; (c) ways to enhance the quality, utility, and clarity of the information to be collected; and (d) ways to minimize the burden of the collection of information on respondents, including through the use of automated collection techniques or other forms of information technology.

Comments submitted in response to this notice will be summarized and/or included in the request for OMB approval of this information collection; they also will become a matter of public record.

Dated: May 19, 1998.

Madeleine Clayton,

Management Analyst, Office of Management and Organization.

[FR Doc. 98–13794 Filed 5–21–98; 8:45 am]

BILLING CODE 3510–06–P

DEPARTMENT OF COMMERCE

Submission for OMB Review; Comment Request

DOC has submitted to the Office of Management and Budget (OMB) for clearance the following proposal for collection of information under the provisions of the Paperwork Reduction Act (44 U.S.C. chapter 35).

Agency: Bureau of the Census.
Title: Census 2000, Special Place Facility Questionnaire Operation and Military Installation Group Quarters Address List Operation.
Form Number(s): D–351, D–351(MIL).
Agency Approval Number: 0607–0786.
Type of Request: Reinstatement, with change, of an expired collection.
Burden: 112,618 hours.
Number of Respondents: 450,473.
Avg Hours Per Response: 15 minutes.
Needs and Uses: Planning is currently underway for the Census 2000. The Census Bureau must provide everyone in the United States and Outlying Areas the opportunity to be counted in Census 2000, including persons living at group quarters (GQs) (student dorms, shelters, group homes, etc.) and housing units (HUs) at and/or associated with special places (SPs). One of the major requirements for enumeration of persons at SP facilities is to identify the GQs and any associated HUs at each SP.

The Census Bureau will maintain a file of SPs and GQs that was created from the 1990 census GQ files and is being updated from ongoing programs and other activities that will be carried out prior to Census 2000.

We plan to phone each SP in our updated file of SPs and GQs and conduct a computer assisted interview to identify and collect updated information about the GQs and HUs at each SP. Personal visit interviews will be conducted for a small number of cases. This operation will be very similar to that conducted for the 1995 and 1996 Census Tests and the 2000 Census Dress Rehearsal currently being conducted. Additionally, we plan to conduct a listing operation at military installations to collect essentially the same information.

All information gathered during this operation will be used to help us in Census 2000 to properly enumerate individuals that live in the HUs and GQs associated with SPs in the United States and Outlying Areas.

Affected Public: Business or other for-profit, individuals or households, not-for-profit institutions, Federal government.
Frequency: One time.
Respondent's Obligation: Mandatory.
Legal Authority: Title 13 USC, Sections 141 and 193.
OMB Desk Officer: Nancy Kirkendall, (202) 395–7313.

Copies of the above information collection proposal can be obtained by calling or writing Linda Engelmeier, DOC Forms Clearance Officer, (202) 482–3272, Department of Commerce, room 5327, 14th and Constitution Avenue, NW, Washington, DC 20230.

Written comments and recommendations for the proposed information collection should be sent within 30 days of publication of this notice to Nancy Kirkendall, OMB Desk

Officer, room 10201, New Executive Office Building, Washington, DC 20503.

Dated: May 14, 1998.

Linda Engelmeier,

Departmental Forms Clearance Officer, Office of Management and Organization.

[FR Doc. 98–13793 Filed 5–21–98; 8:45 am]

BILLING CODE 3510–07–P

DEPARTMENT OF COMMERCE

International Trade Administration

[A–570–846]

Brake Rotors From the People's Republic of China: Initiation of New Shipper Antidumping Duty Administrative Review

AGENCY: Import Administration, International Trade Administration, Department of Commerce.

SUMMARY: The Department of Commerce has received a request to conduct a new shipper administrative review of the antidumping duty order on brake rotors from the People's Republic of China. In accordance with 19 CFR 351.214(d), we are initiating this administrative review.

EFFECTIVE DATE: May 22, 1998.

FOR FURTHER INFORMATION CONTACT: Brian Smith or Sunkyu Kim, Import Administration, International Trade Administration, U.S. Department of Commerce, 14th Street and Constitution Avenue, NW, Washington, DC 20230; telephone (202) 482–1766 or 482–2613, respectively.

Applicable Statute and Regulations

Unless otherwise indicated, all citations to the Tariff Act of 1930, as amended (''the Act''), are references to the provisions effective January 1, 1995, the effective date of the amendments made to the Act by the Uruguay Round Agreements Act. In addition, unless otherwise indicated, all citations to the Department of Commerce (''the Department'') regulations are to the provisions codified at 19 CFR part 351 (62 FR 27295, May 19, 1997).

SUPPLEMENTARY INFORMATION:

Background

The Department has received a timely request from Yantai Chen Fu Machinery Co., Ltd., (''YCFM''), in accordance with 19 CFR 351.214(d), for a new shipper review of the antidumping duty order on brake rotors from the People's Republic of China (''PRC''), which has an April anniversary date. YCFM (''the respondent'') has certified that it did not export brake rotors to the United States during the period of investigation (''POI''), and that it is not affiliated with any exporter or producer which did export brake rotors during the POI.

In accordance with section 751(a)(2)(B) of the Act, as amended, and 19 CFR 351.214(b), and based on information on the record, we are initiating the new shipper review as requested.

It is the Department's usual practice in cases involving non-market economies to require that a company seeking to establish eligibility for an antidumping duty rate separate from the country-wide rate provide *de jure* and *de facto* evidence of an absence of government control over the company's export activities. Accordingly we will issue a separate rates questionnaire to the above-named respondent, allowing 30 days for response. If the response from the respondent provides sufficient indication that the YCFM is not subject to either *de jure* or *de facto* government control with respect to its exports of brake rotors, this review will proceed. If, on the other hand, YCFM does not demonstrate its eligibility for a separate rate, then YCFM will be deemed to be affiliated with other companies that exported during the POI and that did not establish entitlement to a separate rate, and this review will be terminated.

Initiation of Review

In accordance with section 751(a)(2)(B)(ii) of the Act and 19 CFR 351.214(d)(1), we are initiating a new shipper review of the antidumping duty order on brake rotors from the PRC. On May 11, 1998, YCFM agreed to waive the time limits in order that the Department, pursuant to 19 CFR 351.214(j)(3), may conduct this review concurrent with the first annual administrative review of this order for the period October 10, 1996–March 31, 1998, which is being conducted pursuant to section 751(a)(1) of the Act. See, Antidumping Duties, Countervailing Duties; Final Rule, (62 FR 27295, 27395, May 19, 1997). Therefore, we intend to issue the final results of this review not later than 245 days after the last day of the anniversary month.

Antidumping duty proceeding	Period to be reviewed
PRC: Brake Rotors, A–570–846:	
Yantai Chen Fu Machinery Co., Ltd ...	10/10/96–03/31/98

We will instruct the U.S. Customs Service to allow, at the option of the importer, the posting, until the completion of the review, of a bond or security in lieu of a cash deposit for each entry of the merchandise exported by the above listed company. This action is in accordance with 19 CFR 351.214(e) and (j)(3).

Interested parties that need access to the proprietary information in this new shipper review should submit applications for disclosure under administrative protective orders in accordance with 19 CFR 353.34(b).

This initiation and this notice are in accordance with section 751(a) of the Act (19 U.S.C. 1675(a)) and 19 CFR 351.214(d).

Dated: May 14, 1998.

Maria Harris Tildon,

Acting Deputy Assistant Secretary, Import Administration.

[FR Doc. 98–13803 Filed 5–21–98; 8:45 am]

BILLING CODE 3510–DS–P

DEPARTMENT OF COMMERCE

International Trade Commission

[A–351–820]

Ferrosilicon From Brazil: Notice of Final Results of Antidumping Duty Administrative Review

AGENCY: Import Administration, International Trade Administration, Department of Commerce.

ACTION: Notice of Final Results of Antidumping Duty Administrative Review.

SUMMARY: On January 16, 1998, the Department of Commerce published the preliminary results of the administrative review of the antidumping duty order on Ferrosilicon from Brazil. This review covers exports of this merchandise to the United States by one manufacturer/exporter, Companhia de Ferro Ligas da Bahia, during the period March 1, 1996, through February 28, 1997.

We gave interested parties an opportunity to comment on the preliminary results. Based on our analysis of the comments received, we have not changed the final results from those presented in the preliminary results.

EFFECTIVE DATE: May 22, 1998.

FOR FURTHER INFORMATION CONTACT: Wendy Frankel or Sal Tauhidi, AD/CVD Enforcement Group II, Office Four, Import Administration, International Trade Administration, U.S. Department of Commerce, 14th Street and Constitution Avenue, NW, Washington, DC 20230; telephone: (202) 482–5849 or (202) 482–4851, respectively.

SUPPLEMENTARY INFORMATION:

The Applicable Statute and Regulations

Unless otherwise indicated, all citations to the Tariff Act of 1930, as amended (the Act) are references to the provisions effective January 1, 1995, the effective date of the amendments to the Act by the Uruguay Round Agreements Act (URAA). In addition, unless otherwise indicated, all references to the Department of Commerce's (the Department's) regulations refer to the regulations as codified at 19 CFR part 353 (April 1, 1997).

Background

The Department published the antidumping duty order on ferrosilicon from Brazil on March 14, 1994 (59 FR 11769). On January 16, 1998, the Department published the preliminary results of the 1996–1997 administrative review of that antidumping duty order (63 FR 2661). On March 4, 1998, and March 16, 1998, we received case and rebuttal briefs from Companhia de Ferro Ligas da Bahia (Ferbasa), and Aimcor and SKW Metals & Alloys, Inc. (the petitioners). Based on our analysis of the comments received, we have not changed the final results from those presented in the preliminary results.

Scope of Review

The merchandise subject to this review is ferrosilicon, a ferro alloy generally containing, by weight, not less than four percent iron, more than eight percent but not more than 96 percent silicon, not more than 10 percent chromium, not more than 30 percent manganese, not more than three percent phosphorous, less than 2.75 percent magnesium, and not more than 10 percent calcium or any other element. Ferrosilicon is a ferro alloy produced by combining silicon and iron through smelting in a submerged-arc furnace. Ferrosilicon is used primarily as an alloying agent in the production of steel and cast iron. It is also used in the steel industry as a deoxidizer and a reducing agent, and by cast iron producers as an inoculant.

Ferrosilicon is differentiated by size and by grade. The sizes express the maximum and minimum dimensions of the lumps of ferrosilicon found in a given shipment. Ferrosilicon grades are defined by the percentages by weight of contained silicon and other minor elements. Ferrosilicon is most commonly sold to the iron and steel industries in standard grades of 75 percent and 50 percent ferrosilicon. Calcium silicon, ferrocalcium silicon, and magnesium ferrosilicon are specifically excluded from the scope of this review. Calcium silicon is an alloy containing, by weight, not more than five percent iron, 60 to 65 percent silicon, and 28 to 32 percent calcium. Ferrocalcium silicon is a ferro alloy containing, by weight, not less than four percent iron, 60 to 65 percent silicon, and more than 10 percent calcium. Magnesium ferrosilicon is a ferro alloy containing, by weight, not less than four percent iron, not more than 55 percent silicon, and not less than 2.75 percent magnesium. Ferrosilicon is currently classifiable under the following subheadings of the Harmonized Tariff Schedule of the United States (HTSUS): 7202.21.1000, 7202.21.5000, 7202.21.7500, 7202.21.9000, 7202.29.0010, and 7202.29.0050. The HTSUS subheadings are provided for convenience and customs purposes. Our written description of the scope of this review is dispositive.

Ferrosilicon in the form of slag is included within the scope of this order if it meets, in general, the chemical content definition stated above and is capable of being used as ferrosilicon. Parties that believe their importations of ferrosilicon slag do not meet these definitions should contact the Department and request a scope determination.

Analysis of Comments Received

Comment 1

Ferbasa maintains that the Department's recalculation of cost of manufacturing (COM) for ferrosilicon based on the six-month period, September 1, 1996 through February 28, 1997, instead of the twelve-month fiscal year, January 1, 1996 through December 31, 1996, is inconsistent with the instructions set forth in the Department's questionnaire. Ferbasa notes the fact that, in a letter from the Department dated June 19, 1997, the Department allowed the company to report home market sales data for the six-month period. (See, the Department's letter from Holly Kuga to Gilvan Durao, Executive Director of Ferbasa.) At the same time, however, Ferbasa observes that it followed the Department's questionnaire instructions which allow respondents to report production costs on a fiscal-year basis in certain circumstances.

Ferbasa adds that the Department verified its submitted fiscal year costs and notes that the recalculation of COM based on a six-month period is inconsistent with the full-year selling, general and administrative expenses (SG&A) and interest ratio calculations used by the Department to compute cost of production (COP) in the preliminary results of this case. For these reasons, Ferbasa contends that the Department must use the company's full fiscal-year cost data to compute COP for the final results of this administrative review.

The petitioners argue that the Department correctly calculated Ferbasa's COM based on the six-month period rather than the submitted fiscal year data. The petitioners note that the Department reasonably recalculated COM based on the period of time which coincides with Ferbasa's reported home market sales data. Moreover, the petitioners maintain that the fact Ferbasa reported its cost data on a fiscal-year basis does not obligate the Department to use that information in its sales-below-cost analysis.

The petitioners further note that both the fiscal year and the six-month data were tested at verification and, therefore, the Department is not compelled to use only the submitted fiscal-year data. Finally, the petitioners conclude that the Department's normal calculation of SG&A and interest expense ratios based on the fiscal year data is appropriate.

Department's Position

We agree with petitioners that it was appropriate in this case for us to revise Ferbasa's submitted COM figures to reflect the six-month period. Based on a timely request from Ferbasa, we permitted the company to limit its reporting of home market sales to only those months that were contemporaneous to its one U.S. sale. We further note that the Department's questionnaire reflects our general practice of allowing a respondent to report costs for its normal fiscal year *if* this fiscal period corresponds closely with the period under investigation or review.

In the instant proceeding, although Ferbasa's fiscal year corresponds closely with the entire period under review it was not sufficiently correlated to the sales reporting period. We advised Ferbasa of our intent to examine at verification the extent to which the submitted fiscal year costs were representative of costs incurred during the six-month sales reporting period. (See, Cost Verification Agenda, October 27, 1997, Section IV. C., at 5.)

Based on our testing at verification, we determined that the reported fiscal year costs were *not* reasonably reflective of the costs incurred to produce the subject merchandise sold during the six-month sales reporting period. (See, Memorandum to the Official File re: Verification of Cost of Production and Constructed Value Information (Cost Verification Report), at 2, and Section IV.C., at 10 (January 12, 1998); see also,

Memorandum to the Official File re: Adjustments to Cost of Production and Constructed Value (January 12, 1998).)

Accordingly, in reaching our preliminary determination we relied on the actual costs incurred to produce the subject merchandise during the six-month period contemporaneous to the reported sales. This approach is consistent with the Department's obligation to ensure that the calculations are based on costs which ''* * * reasonably reflects and accurately captures all of the actual costs incurred in producing * * * the product under investigation or review.'' (See, Statement of Administrative Action accompanying the URRA, H.R. 5110, H.R. Doc. No. 103–316, vol. 1 (1994) at 834 (SAA); see also Final Results of Antidumping Duty Administrative Reviews: Certain Cold-Rolled and Corrosion-Resistant Carbon Steel Flat Products From Korea, 63 FR 13170, 13192 (March 18, 1998), where the Department determined that the POR costs differed from the company's fiscal year costs, and after reviewing the information, based the margin calculations on the POR costs rather than on the fiscal year costs.) Accordingly, we continue to rely on costs incurred during the six-month period in these final results.

As to Ferbasa's comment that the Department's general practice of calculating SG&A and interest expense based on the fiscal year requires that COM be based on that same period, we disagree. The Department normally calculates SG&A and interest expenses over the closest corresponding fiscal year's audited financial statements. We then use these ratios to determine the per-unit SG&A and interest expense associated with each product. This calculation measures, over a full fiscal year, the level of G&A expenses associated with the company's sales. The basis for calculating these ratios over the full fiscal year is not because it is the exact same period as that examined for the cost calculation, but rather because using the annual ratio is most reflective of these type of expenses, which are typically incurred unevenly throughout the year. (See Final Determination of Sales at Less Than Fair Value: Oil Country Tubular Goods from Argentina, 60 FR 33,539, 33,549 (June 28, 1995); and Final Determination of Sales at Less Than Fair Value: Hot-Rolled Carbon Steel Flat Products, Cold-Rolled Carbon Steel Flat Products, Corrosion-Resistant Carbon Steel Flat Products, and Cut-to Length Carbon Steel Plate from Canada, 58 FR 37105, 37113 (July 9, 1993).)

Comment 2

Ferbasa contends that the Department should not have included valued added taxes (IPI and ICMS) in the calculation of constructed value (CV). According to Ferbasa, section 773(a)(6)(B) of the Act provides for the exclusion of home market consumption taxes from normal value (NV) in order to maintain a tax neutral comparison for purposes of measuring whether dumping has occurred.

The petitioners contend that the Department properly included the IPI and ICMS taxes in CV. According to the petitioners, section 773(e) of the Act provides that any home market tax imposed on export goods should be included in CV unless the tax is refunded or remitted upon exportation. The petitioner argues that Ferbasa has not stated nor did the verification conclude that these IPI and ICMS taxes have been remitted or refunded upon exportation.

Department's Position:

Because the NV in these final results was based on Ferbasa's home market prices and not on CV, this issue is moot. Therefore, we are not addressing it here.

Final Results of Review

Our final results are unchanged from those presented in our preliminary results. Therefore, the dumping margin for Ferbasa remains at zero percent for the period March 1, 1996, through February 28, 1997.

The following deposit requirement will be effective for all shipments of subject merchandise from Brazil entered, or withdrawn from warehouse, for consumption on or after the publication date of the final results of this administrative review, as provided by section 751(a)(1) of the Act: (1) The cash deposit rate for the reviewed company will be zero; (2) for merchandise exported by manufacturers or exporters not covered in this review but covered in previous reviews or the original less-than-fair-value (LTFV) investigation, the cash deposit rate will continue to be the rate published in the most recent final results or determination for which the manufacturer or exporter received a company-specific rate; (3) if the exporter is not a firm covered in this review, a previous review, or the LTFV investigation, but the manufacturer is, the cash deposit rate will be the rate established for the manufacturer of the merchandise in the final results of this review, earlier review or the LTFV investigation, whichever is the most recent; (4) if neither the exporter nor the manufacturer is a firm covered in this or any previous reviews, the cash deposit will be 35.95 percent, the ''All Others'' rate made effective by the antidumping duty order (59 FR 11769, March 14, 1994).

This notice serves as a final reminder to importers of their responsibility under 19 CFR 353.26 to file a certificate regarding the reimbursement of antidumping duties prior to liquidation of the relevant entries during this review period. Failure to comply with this requirement could result in the Secretary's presumption that reimbursement of antidumping duties occurred and the subsequent assessment of double antidumping duties.

This notice also serves as a reminder to parties subject to administrative protective order (APO) of their responsibility concerning the disposition of proprietary information disclosed under APO in accordance with 19 CFR 353.34(d) of the Department's regulations. Timely written notification of the return/destruction of APO materials or conversion to judicial protective order is hereby requested. Failure to comply with the regulations and terms of the APO is a sanctionable violation.

This administrative review and notice are in accordance with sections 751(a)(1) and 777(i)(1) of the Act.

Dated: May 14, 1998.

Robert S. LaRussa,

Assistant Secretary for Import Administration.

[FR Doc. 98–13802 Filed 5–21–98; 8:45 am]

BILLING CODE 3510–DS–P

DEPARTMENT OF COMMERCE

International Trade Administration

[A–351–826]

Small Diameter Circular Seamless Carbon and Alloy Steel Standard, Line and Pressure Pipe From Brazil; Notice of Initiation and Preliminary Results of Changed Circumstances Antidumping Duty Administrative Review, and Intent to Revoke Order in Part

AGENCY: Import Administration, International Trade Administration, Department of Commerce.

ACTION: Notice of initiation and preliminary results of changed circumstances antidumping duty administrative review, and intent to revoke order in part.

SUMMARY: In response to a request made on April 27, 1998, by the Gulf States Tube Division of Vision Metals (''Gulf

States'')[1], a petitioner in this case, the Department of Commerce (the Department) is initiating a changed circumstances antidumping duty administrative review and issuing a preliminary intent to revoke in part the antidumping duty order on small diameter circular seamless carbon and alloy steel standard, line and pressure pipe from Brazil, the scope of which currently includes certain glass-lined seamless pressure pipe. Gulf States and Koppel Steel Corporation, the petitioners in this case, have expressed no further interest in the relief provided by the antidumping duty order with respect to certain glass-lined seamless pressure pipe imported from Brazil. Accordingly, we intend to revoke this order in part.

Interested parties are invited to comment on these preliminary results.

EFFECTIVE DATE: May 22, 1998.

FOR FURTHER INFORMATION CONTACT: Helen M. Kramer or Linda Ludwig, AD/CVD Enforcement Group III, Import Administration, International Trade Administration, U.S. Department of Commerce, 14th Street and Constitution Avenue, N.W., Washington D.C. 20230; telephone (202) 482–0405 or (202) 482–3833, respectively.

SUPPLEMENTARY INFORMATION:

Applicable Statute and Regulations

Unless otherwise indicated, all citations to the statute are references to the provisions effective January 1, 1995, the effective date of the amendments made to the Tariff Act of 1930 (the Act) by the Uruguay Round Agreements Act (URAA). In addition, unless otherwise indicated, all citations to the Department's regulations are to the regulations at 19 CFR Part 351 (62 FR 27296, May 19, 1997).

Background

On August 3, 1995, the Department published the amended final determination and antidumping duty order in the less-than-fair-value (LTFV) investigation of small diameter circular seamless carbon and alloy steel standard, line and pressure pipe from Brazil (60 FR 39707). On April 27, 1998, Gulf States, a petitioner, requested partial revocation of the antidumping duty order due to changed circumstances, pursuant to 19 U.S.C. 1675(b)(1) and 19 CFR 351.222(g), 62 FR 27,296 at 27,400–01 (May 19, 1997), with respect to imports from Brazil of certain glass-lined seamless pressure pipe. On May 1, 1998, the second petitioner, Koppel Steel Corporation, informed the Department by telephone that it has no interest in continuing the application of the order to glass-lined seamless pressure pipe. See Memorandum for the File from Helen M. Kramer, Case Analyst, to Linda Ludwig, Program Manager (May 1, 1998).

Scope of the Review

Imports covered by this review and partial revocation are shipments of seamless carbon and alloy (other than stainless) steel pipes, of circular cross-section, not more than 114.3 mm (4.5 inches) in outside diameter, regardless of wall thickness or manufacturing process (hot-finished or cold-drawn) that (1) has been cut into lengths of six to 120 inches, (2) has had the inside bore ground to a smooth surface, (3) has had multiple layers of specially formulated corrosion resistant glass permanently baked on at temperatures of 1,440 to 1,700 degrees Fahrenheit in thicknesses from 0.032 to 0.085 inch (40 to 80 mils), and (4) has flanges or other forged stub ends welded on both ends of the pipe. The special corrosion resistant glass referred to in this definition may be glass containing by weight (1) 70 to 80 percent of an oxide of silicone, zirconium, titanium or cerium (Oxide Group RO_2), (2) 10 to 15 percent of an oxide of sodium, potassium, or lithium (Oxide Group RO), (3) from a trace amount to 5 percent of an oxide of either aluminum, cobalt, iron, vanadium, or boron (Oxide Group R_2O_3, or (4) from a trace amount to 5 percent of a fluorine compound in which fluorine replaces the oxygen in any one of the previously listed oxide groups. These glass-lined pressure pipes are commonly manufactured for use in glass-lined equipment systems for processing corrosive or reactive chemicals, including acrylates, alkanolamines, herbicides, pesticides, pharmaceuticals and solvents.

The glass-lined pressure pipes subject to this review are currently classifiable under subheadings 7304.39.0020, 7304.39.0024 and 7304.39.0028 of the Harmonized Tariff Schedule of the United States (HTSUS). The HTSUS subheadings are provided for convenience and U.S. Customs' purposes only. The written description of the scope of this review remains dispositive.

Initiation and Preliminary Results of Changed Circumstances Antidumping Duty Administrative Review, and Intent to Revoke in Part

At the request of the petitioner, Gulf States, in accordance with section 751(b) of the Act and section 351.216 of the Department's regulations, the Department is initiating a changed circumstances review of small diameter circular seamless carbon and alloy steel standard, line and pressure pipe from Brazil to determine whether partial revocation of the antidumping duty order is warranted with respect to glass-lined seamless pressure pipe. Section 782(h)(2) of the Act and section 351.222(g)(1)(i) of the Department's regulations provide that the Department may revoke an order if it determines that producers accounting for substantially all of the production of the domestic like product have no further interest in the order. In addition, in the event the Department determines that expedited action is warranted, section 351.221(c)(3)(ii) of the regulations permits the Department to combine the notices of initiation and preliminary results.

In accordance with section 751(b) of the Act and sections 351.222(g)(1)(i) and 351.221(c)(3), we are initiating this changed circumstances administrative review and have determined that expedited action is warranted. Our decision to expedite this review stems from the domestic industry's lack of interest in applying the antidumping duty order to glass-lined seamless pressure pipe.

Based on the expression of no interest by Gulf States and Koppel Steel and absent any objection by any other domestic interested parties, we have preliminarily determined that substantially all of the domestic producers of the like product have no interest in continued application of the antidumping duty order to glass-lined seamless pressure pipe from Brazil.

Because we have concluded that expedited action is warranted, we are combining these notices of initiation and preliminary results. Therefore, we are hereby notifying the public of our intent to revoke, in part, the antidumping duty order as it relates to imports of certain glass-lined seamless pressure pipe from Brazil.

Interested parties may submit case briefs and/or written comments no later than 30 days after the date of publication of these preliminary results. Rebuttal briefs and rebuttals to written comments, limited to issues raised in such briefs or comments, may be filed no later than 37 days after the date of publication. The Department will issue the final results of this changed circumstances review, which will include the results of its analysis raised in any such written comments, no later than 270 days after the date on which this review was initiated, or within 45 days if all parties agree to our

[1] Gulf States was previously a division of Quanex Corporation.

preliminary determination. See section 351.216(e) of the Department's regulations.

If final revocation occurs, we will instruct the U.S. Customs Service to end the suspension of liquidation and to refund, with interest, any estimated antidumping duties collected for all unliquidated entries of glass-lined seamless pressure pipe from Brazil. The current requirement for a cash deposit of estimated antidumping duties on all subject merchandise will continue unless and until it is modified pursuant to the final results of this changed circumstances review.

This initiation of review and notice are in accordance with sections 751(b) of the Act, as amended (19 U.S.C. 1675(b)), and 19 CFR 351.216, 351.221, and 351.222 (62 FR 27396, 27398–9, May 19, 1997).

Dated: May 18, 1998.

Robert S. LaRussa,

Assistant Secretary for Import Administration.

[FR Doc. 98–13801 Filed 5–21–98; 8:45 am]

BILLING CODE 3510–DS–P

DEPARTMENT OF COMMERCE

National Oceanic and Atmospheric Administration

[I.D. 011996A]

Endangered and Threatened Wildlife; Recovery Plans for Listed Sea Turtles

AGENCY: National Marine Fisheries Service (NMFS), National Oceanic and Atmospheric Administration (NOAA), Commerce.

ACTION: Notice of availability.

SUMMARY: NMFS and the Fish and Wildlife Service (FWS), Department of the Interior, (collectively, the Services) announce the availability of the final recovery plans for U.S. Pacific populations of endangered and threatened sea turtles, as required by the Endangered Species Act of 1973 (ESA).

DATES: May 22, 1998.

ADDRESSES: Requests for copies of the recovery plans may be submitted to the Chief, Endangered Species Division, Office of Protected Resources, NMFS, 1315 East-West Highway, Silver Spring, MD 20910. Copies may be purchased from the U.S. Fish and Wildlife Reference Service, 5430 Grosvenor Lane, Suite 110, Bethesda, MD 20814, 1–800–582–3421. Electronic copies in .pdf format are also available at NMFS' Protected Resources internet website (www.nmfs.gov/prot_res/).

FOR FURTHER INFORMATION CONTACT: Barbara Schroeder, Office of Protected Resources, NMFS, 1315 East-West Highway, Silver Spring, MD 20910, Phone: 301–713–1401, or Sandy MacPherson, FWS, 6620 Southpoint Dr. South, Jacksonville, FL 32216, Phone: 904–232–2580.

SUPPLEMENTARY INFORMATION:

Background

The ESA is administered jointly by the Services. NMFS has jurisdiction over most species in the marine system while FWS has jurisdiction elsewhere. Listed endangered and threatened species under NMFS jurisdiction are enumerated in 50 CFR 222.23(a) and 50 CFR 227.4, respectively. The List of Endangered and Threatened Wildlife, which contains species under the jurisdiction of both Services, is found in 50 CFR 17.11(h).

Pursuant to a Memorandum of Agreement between the two Services, the jurisdiction over listed sea turtles is shared: FWS has responsibility for sea turtles primarily in the terrestrial environment, while NMFS has responsibility for sea turtles primarily in the marine environment. Presently, all sea turtle species found in the United States are listed as follows: Kemp's ridley (*Lepidochelys kempii*), leatherback (*Dermochelys coriacea*), and hawksbill (*Eretmochelys imbricata*) are listed as endangered; loggerhead (*Caretta caretta*), green (*Chelonia mydas*), and olive ridley (*Lepidochelys olivacea*) turtles are listed as threatened, except for breeding populations of green turtles in Florida and on the Pacific coast of Mexico, and for breeding populations of olive ridleys on the Pacific coast of Mexico, which are listed as endangered.

Section 4(f)(1) of the ESA requires that the Secretary of the Interior or the Secretary of Commerce develop and implement recovery plans for the conservation and survival of endangered and threatened species listed pursuant to section 4(c) of the ESA, unless such plans would not promote the conservation of the species. Pursuant to section 4(f)(4) of the ESA, prior to final approval and implementation of a new or revised recovery plan, the Secretary shall provide public notice and an opportunity for public review and comment. The Services published a notice of availability of the draft recovery plans in the **Federal Register** on March 12, 1996 (61 FR 9978). No comments were received during the 60-day comment period.

The recovery plans are for the U.S. Pacific populations of the loggerhead, olive ridley, leatherback, hawksbill, green turtle and the East Pacific population of the green turtle. These are the first comprehensive recovery plans for sea turtle populations in the U.S. Pacific. To accomplish the drafting of the recovery plans, a team was formed consisting of professional biologists with experience in the region and with marine turtles.

While similar in format to previous sea turtle recovery plans for the Atlantic and the Caribbean, the unique nature of the Pacific required some changes to that format. The geographic scope of these plans is much larger than any previously attempted, with over 5,000 islands and 3,000 miles (4,827 km) of ocean, as well as the mainland United States, to consider. Furthermore, the amount of jurisdictional overlap between nations, commonwealths, territories, and compact-of-free-association-states and the various turtle populations required a broader management perspective than has been attempted previously. Finally, sea turtles have not been studied as intensively in the Pacific as in other U.S. areas, and thus there is a large void in basic biological information. For these reasons, these plans have more extensive text on the general biology of the turtles, so that they might act as a resource to managers seeking a handy reference to the species. The plans are also subdivided into U.S. jurisdictional areas (i.e. the various commonwealths and territories), so that local managers can address issues within their respective regions more easily.

To implement these plans, NMFS will form implementation teams, where needed, consisting of representatives from Federal agencies, states, territories, and commonwealths. The team(s) will produce a plan that identifies solutions for achieving recovery of these populations.

Authority: 16 U.S.C. 1531–1543 *et seq.*

Dated: May 15, 1998.

Hilda Diaz-Soltero,

Director, Office of Protected Resources, National Marine Fisheries Service.

[FR Doc. 98–13763 Filed 5–21–98; 8:45 am]

BILLING CODE 3510–22–F

DEPARTMENT OF COMMERCE

National Oceanic and Atmospheric Administration

[I.D. 051398F]

North Pacific Fishery Management Council; Public Meeting

AGENCY: National Marine Fisheries Service (NMFS), National Oceanic and

Atmospheric Administration (NOAA), Commerce.

ACTION: Notice of a committee meeting.

SUMMARY: The North Pacific Fishery Management Council's Community Development Quota (CDQ) Committee will meet in Juneau, AK.

DATES: The meeting will be held on Thursday, June 18, 1998.

ADDRESSES: The meeting will be held in Room 445C at the NMFS Regional Office, 709 W. 9th Street, Juneau, AK 99801.

Council address: North Pacific Fishery Management Council, 605 W. 4th Ave., Suite 306, Anchorage, AK 99501–2252.

FOR FURTHER INFORMATION CONTACT: Jane DiCosimo, telephone: 907–271–2809.

SUPPLEMENTARY INFORMATION: The Committee will meet to discuss halibut small-boat fleet composition and enforcement issues related to the possibility of moving the CDQ program out of the NMFS Restricted Access Management Division.

Although other issues not contained in this agenda may come before this committee for discussion, in accordance with the Magnuson-Stevens Fishery Management Conservation Act, those issues may not be the subject of formal action during this meeting. Action will be restricted to those issues specifically identified in the agenda listed in this notice.

Special Accommodations

These meetings are physically accessible to people with disabilities. Requests for sign language interpretation or other auxiliary aids should be directed to Helen Allen, 907–271–2809, at least 5 working days prior to the meeting date.

Dated: May 15, 1998.

Bruce C. Morehead,

Acting Director, Office of Sustainable Fisheries, National Marine Fisheries Service.

[FR Doc. 98–13762 Filed 5–21–98; 8:45 am]

BILLING CODE 3510–22–F

DEPARTMENT OF COMMERCE

National Oceanic and Atmospheric Administration

[I.D. 051398G]

North Pacific Fishery Management Council; Public Meeting

AGENCY: National Marine Fisheries Service (NMFS), National Oceanic and Atmospheric Administration (NOAA), Commerce.

ACTION: Notice of committee meeting.

SUMMARY: The North Pacific Fishery Management Council's Halibut Guideline Harvest Committee will meet in Anchorage, AK.

DATES: The meeting will be held on Friday, June 19, 1998.

ADDRESSES: The meeting will be held in Room 229, of the Old Federal Building, 605 W. 4th Avenue, Anchorage, AK 99501.

Council address: North Pacific Fishery Management Council, 605 W. 4th Ave., Suite 306, Anchorage, AK 99501–2252.

FOR FURTHER INFORMATION CONTACT: Jane DiCosimo, telephone: 907–271–2809.

SUPPLEMENTARY INFORMATION: The Committee will meet to discuss a proposed banking program for the halibut charter boat fleet, whereby unharvested halibut would accrue for use in a year when the charter fleet's allocation is projected to be below a minimum amount needed to meet the committee's goal of not shortening the fishing season or reducing the 2–fish bag limit. Other topics will include the proposed moratorium on halibut charter vessels and a rod permit program.

Although other issues not contained in this agenda may come before this committee for discussion, according to the Magnuson-Stevens Fishery Conservation and Management Act, those issues may not be of formal discussion during this meeting. Action will be restricted to those issues specifically identified in the agenda in this notice.

Special Accommodations

The meeting is physically accessible to people with disabilities. Requests for sign language interpretation or other auxiliary aids should be directed to Helen Allen, 907–271–2809, at least 5 working days prior to the meeting date.

Dated: May 15, 1998.

Bruce C. Morehead,

Acting Director, Office of Sustainable Fisheries, National Marine Fisheries Service.

[FR Doc. 98–13764 Filed 5–21–98; 8:45 am]

BILLING CODE 3510–22–F

DEPARTMENT OF COMMERCE

National Oceanic and Atmospheric Administration

[I.D. 051498B]

Marine Mammals

AGENCY: National Marine Fisheries Service (NMFS), National Oceanic and Atmospheric Administration (NOAA), Commerce.

ACTION: Receipt of application for amendment.

SUMMARY: Notice is hereby given that the Southwest Fisheries Science Center, Honolulu Laboratory, National Marine Fisheries Service, 2570 Dole Street, Honolulu, Hawaii 96822–2396, has requested an amendment to scientific research Permit No. 848–1335.

DATES: Written or telefaxed comments must be received on or before June 22, 1998.

ADDRESSES: The amendment request and related documents are available for review upon written request or by appointment in the following office(s):

Permits Division, Office of Protected Resources, NMFS, 1315 East-West Highway, Room 13705, Silver Spring, MD 20910 (301/713–2289);

Regional Administrator, Southwest Region, National Marine Fisheries Service, 501 West Ocean Blvd., Suite 4200, Long Beach, CA 90802–4213 (562/980–4001); and

Protected Species Program Manager, Pacific Islands Area Office, 2570 Dole Street, Room 106, Honolulu, HI 96822–2396 (808/973–2941).

Written data or views, or requests for a public hearing on this request should be submitted to the Chief, Permits and Documentation Division, F/PR1, Office of Protected Resources, National Marine Fisheries Service, Silver Spring, MD 20910. Those individuals requesting a hearing should set forth the specific reasons why a hearing on this particular request would be appropriate.

Comments may also be submitted by facsimile at (301) 713–0376, provided the facsimile is confirmed by hard copy submitted by mail and postmarked no later than the closing date of the comment period. Please note that comments will not be accepted by e-mail or other electronic media.

FOR FURTHER INFORMATION CONTACT: Jeannie Drevenak, 301/713–2289.

SUPPLEMENTARY INFORMATION: The subject amendment to Permit No. 848–1335, issued on June 10, 1997 (62 FR 32586) is requested under the authority of the Marine Mammal Protection Act of 1972, as amended (16 U.S.C. 1361 *et seq.*), the Regulations Governing the Taking and Importing of Marine Mammals (50 CFR part 216), the endangered species Act of 1973, as amended (16 U.S.C. 1531 *et seq.*), and the regulations governing the taking, importing, and exporting of endangered fish and wildlife (50 FR 222.23).

The permit holder is currently authorized to conduct population assessment, disease assessment, recovery actions, and pelagic ecology

studies of Hawaiian monk seals (*Monachus* schauinslandi) at all locations within the Hawaiian Archipelago and at Johnston Atoll, through May 31, 2002. The permit holder is now requesting that the permit be amended to authorize the relocation or removal of up to 10 adult male Hawaiian monk seals from the Northwestern Hawaiian Islands, in the event that such seals are known to cause mortality to nursing or weaned pups.

In compliance with the National Environmental Policy Act of 1969 (42 U.S.C. 4321 et seq.), an initial determination has been made that the activity proposed is categorically excluded from the requirement to prepare an environmental assessment or environmental impact statement.

Concurrent with the publication of this notice in the **Federal Register**, NMFS is forwarding copies of this application to the Marine Mammal Commission and its Committee of Scientific Advisors.

Dated: May 15, 1998.

Ann D. Terbush,

Chief, Permits and Documentation Division, Office of Protected Resources, National Marine Fisheries Service.

[FR Doc. 98–13499 Filed 5–21–98; 8:45 am]

BILLING CODE 3510–22–F

DEPARTMENT OF COMMERCE

National Oceanic and Atmospheric Administration

[I.D. 051198A]

Marine Mammals; File No. 704–1444

AGENCY: National Marine Fisheries Service (NMFS), National Oceanic and Atmospheric Administration (NOAA), Commerce.

ACTION: Issuance of permit.

SUMMARY: Notice is hereby given that University of Alaska Museum, 907 Yukon Drive, Fairbanks, AK 99775–1200, (Principal Investigator: Gordon H. Jarrell, Ph.D.) has been issued a permit to collect, import/export marine mammal specimens for purposes of scientific research.

ADDRESSES: The permit and related documents are available for review upon written request or by appointment in the following office(s):

Permits and Documentation Division, Office of Protected Resources, NMFS, 1315 East-West Highway, Room 13705, Silver Spring, MD 20910 (301/713–2289); and

Alaska Region, NMFS, P.O. Box 21668, Juneau, AK 99802–1668 (907/586–7221).

FOR FURTHER INFORMATION CONTACT: Ruth Johnson, 301/713–2289.

SUPPLEMENTARY INFORMATION: On February 13, 1998, notice was published in the **Federal Register** (63 FR 7403) that a request for a scientific research permit to collect, import/export marine mammal specimens had been submitted by the above-named organization. The requested permit has been issued under the authority of the Marine Mammal Protection Act of 1972, as amended (16 U.S.C. 1361 *et seq.*), the Regulations Governing the Taking and Importing of Marine Mammals (50 CFR part 216), the Endangered Species Act of 1973, as amended (ESA; 16 U.S.C. 1531 *et seq.*), the regulations governing the taking, importing, and exporting of endangered fish and wildlife (50 CFR parts 217–227), and the Fur Seal Act of 1966, as amended (16 U.S.C. 1151 *et seq.*).

Issuance of this permit, as required by the ESA, was based on a finding that such permit (1) was applied for in good faith, (2) will not operate to the disadvantage of the endangered species which is the subject of this permit, and (3) is consistent with the purposes and policies set forth in section 2 of the ESA.

Dated: May 15, 1998.

Ann D. Terbush,

Chief, Permits and Documentation Division, Office of Protected Resources, National Marine Fisheries Service.

[FR Doc. 98–13765 Filed 5–21–98; 8:45 am]

BILLING CODE 3510–22–F

DEPARTMENT OF COMMERCE

National Telecommunications and Information Administration (NTIA)

Advisory Committee on Public Interest Obligations of Digital Television Broadcasters; Notice of Open Meeting

ACTION: Notice is hereby given of a meeting of the Advisory Committee on Public Interest Obligations of Digital Television Broadcasters, created pursuant to Executive Order 13038.

SUMMARY: The President established the Advisory Committee on Public Interest Obligations of Digital Television Broadcasters (PIAC) to advise the Vice President on the public interest obligations of digital broadcasters. The Committee will study and recommend which public interest obligations should accompany broadcasters' receipt of digital television licenses. The President designated the National Telecommunications and Information Administration as secretariat for the Committee.

AUTHORITY: Executive Order 13038, signed by President Clinton on March 11, 1997.

DATES: The meeting will be held on Monday, June 8, 1998 from 9:30 a.m. to 5:30 p.m.

ADDRESSES: The meeting is scheduled to take place at the Marquette Hotel, 710 Marquette Avenue, Minneapolis, MN 55402. This location is subject to change. If the location changes, another **Federal Register** notice will be issued. Updates about the location of the meeting will also be available on the Advisory Committee's homepage at www.ntia.doc.gov/pubintadvcom/pubint.htm or you may call Karen Edwards at 202–482–8056. The meeting will also be broadcast over the Internet. The broadcast can be accessed via the Advisory Committee's homepage at www.ntia.doc.gov/pubintadvcom/pubint.htm.

FOR FURTHER INFORMATION CONTACT: Karen Edwards, Designated Federal Officer and Telecommunications Policy Specialist, at the National Telecommunications and Information Administration, U.S. Department of Commerce, Room 4720, 14th Street and Constitution Avenue, N.W., Washington, DC 20230. Telephone: 202–482–8056; Fax: 202–482–8058; E-mail: piac@ntia.doc.gov.

Media Inquiries: Please contact Paige Darden at the Office of Public Affairs, at 202–482–7002.

Agenda

Monday, June 8

Opening remarks
Committee deliberations
Public Comment
Closing remarks

This agenda is subject to change. For an updated, more detailed agenda, please check the Advisory Committee at www.ntia.doc.gov/pubintadvcom/pubint.htm.

Public Participation: The meeting will be open to the public, with limited seating available on a first-come, first-served basis. This meeting is physically accessible to people with disabilities. Any member of the public requiring special services, such as sign language interpretation or other ancillary aids, should contact Karen Edwards at least five (5) working days prior to the meeting at 202–482–8056 or at piac@ntia.doc.gov.

Members of the public may submit written comments concerning the Committee's affairs at any time before or after the meeting. The Secretariat's

guidelines for public comment are described below and are available on the Advisory Committee homepage (www.ntia.doc.gov/pubintadvcom/pubint.htm) or by calling 202–482–8056.

Guidelines for Public Comment: The Advisory Committee on Public Interest Obligations of Digital Television Broadcasters welcomes public comments.

Oral Comment: In general, opportunities for oral comment will usually be limited to no more than five (5) minutes per speaker and no more than thirty (30) minutes total at each meeting.

Written Comment: Written comments must be submitted to the Advisory Committee Secretariat at the address listed below. Comments can be submitted either by letter addressed to the Committee (please place ''Public Comment'' on the bottom left of the envelope and submit at least thirty-five (35) copies) or by electronic mail to piac@ntia.doc.gov (please use ''Public Comment'' as the subject line). Written comments received within three (3) workings days of a meeting and comments received shortly after a meeting will be compiled and sent as briefing material to Committee members prior to the next scheduled meeting.

Obtaining Meeting Minutes: Within thirty (30) days following the meeting, copies of the minutes of the meeting may be obtained over the Internet at www.ntia.doc.gov/pubintadvcom/pubint.htm, by phone request at 202–482–8056, by email request at piac@ntia.doc.gov or by written request to Karen Edwards; Advisory Committee on Public Interest Obligations of Digital Television Broadcasters; National Telecommunications and Information Administration; U.S. Department of Commerce, Room 4720; 14th Street and Constitution Avenue NW, Washington, DC 20230.

Larry Irving,

Assistant Secretary for Communications and Information.

[FR Doc. 98–13771 Filed 5–21–98; 8:45 am]

BILLING CODE 3510–60–P

COMMITTEE FOR THE IMPLEMENTATION OF TEXTILE AGREEMENTS

Amendment of Quota and Visa Requirements for Certain Cotton Textile Products Produced or Manufactured in Turkey

May 18, 1998.

AGENCY: Committee for the Implementation of Textile Agreements (CITA).

ACTION: Issuing a directive to the Commissioner of Customs amending quota and visa requirements.

EFFECTIVE DATE: June 2, 1998.

FOR FURTHER INFORMATION CONTACT: Roy Unger, International Trade Specialist, Office of Textiles and Apparel, U.S. Department of Commerce, (202) 482–4212.

SUPPLEMENTARY INFORMATION:

Authority: Section 204 of the Agricultural Act of 1956, as amended (7 U.S.C. 1854); Executive Order 11651 of March 3, 1972, as amended.

In exchange of notes dated January 16, 1998 and March 27, 1998, the Governments of the United States and Turkey agreed that discharge printed fabric classified in Harmonized Tariff Schedule (HTS) numbers 5208.52.3035, 5208.52.4035, 5209.51.6032 (Category 313); 5209.51.6015 (Category 314); 5208.52.4055 (Category 315); 5208.59.2085 (Category 317); 5208.59.2015, 5209.59.0015 and 5211.59.0015 (Category 326) which is produced or manufactured in Turkey and imported on or after June 2, 1998 will no longer be subject to visa requirements. Also, for quota purposes, discharge printed fabric classified in the aforementioned HTS numbers, produced or manufactured in Turkey and imported on or after June 2, 1998 will not be subject to 1998 limits, regardless of the date of export. The new designations for Categories 313, 314, 315, 317 and 326 will be 313–O, 314–O, 315–O, 317–O and 326–O. The 1998 quota levels for the new part-categories remain unchanged.

Effective on June 2, 1998, products in Categories 313, 314, 315, 317 and 326, produced or manufactured in Turkey and exported from Turkey on or after March 27, 1998 must be accompanied by a 313–O, 314–O, 315–O, 317–O and 326–O part-category visa. There will be a grace period from March 27, 1998 through June 30, 1998 during which products exported from Turkey in Categories 313, 314, 315, 317 and 326 may be accompanied by the whole or new part-category visa.

In the letter published below, the Chairman of CITA directs the Commissioner of Customs to amend the export quota and visa requirements.

A description of the textile and apparel categories in terms of HTS numbers is available in the CORRELATION: Textile and Apparel Categories with the Harmonized Tariff Schedule of the United States (see **Federal Register** notice 62 FR 66057, published on December 17, 1997). Also see 52 FR 6859, published on March 5, 1987; and 62 FR 67839, published on December 30, 1997.

Troy H. Cribb,

Chairman, Committee for the Implementation of Textile Agreements.

Committee for the Implementation of Textile Agreements

May 18, 1998.

Commissioner of Customs,
Department of the Treasury, Washington, DC 20229.

Dear Commissioner: This directive amends, but does not cancel, the directive issued to you on December 22, 1997, by the Chairman, Committee for the Implementation of Textile Agreements. That directive concerns imports of certain cotton, wool and man-made fiber textile products, produced or manufactured in Turkey and exported during the twelve-month period which begins on January 1, 1998 and extends through December 31, 1998.

Effective on June 2, 1998, pursuant to exchange of notes dated January 16, 1998 and March 27, 1998 between the Governments of the United States and Turkey and under the terms of the Uruguay Round Agreement on Textiles and Clothing, discharge printed fabric classified in Harmonized Tariff Schedule (HTS) numbers 5208.52.3035, 5208.52.4035, 5209.51.6032 (Category 313); 5209.51.6015 (Category 314); 5208.52.4055 (Category 315); 5208.59.2085 (Category 317); 5208.59.2015, 5209.59.0015 and 5211.59.0015 (Category 326) which is produced or manufactured in Turkey and imported on or after June 2, 1998 will no longer be subject to visa requirements. Also, for quota purposes, discharge printed fabric classified in the aforementioned HTS numbers, produced or manufactured in Turkey and imported on or after June 2, 1998 will not be subject to 1998 limits, regardless of the date of export. The new designations for Categories 313, 314, 315, 317 and 326 will be 313–O [1], 314–O [2], 315–O [3], 317–O [4] and 326–O [5].

The import restraint limits for the new part-categories remain the same as the 1998

[1] Category 313–O: all HTS numbers except 5208.52.3035, 5208.52.4035 and 5209.51.6032.

[2] Category 314–O: all HTS numbers except 5209.51.6015.

[3] Category 315–O: all HTS numbers except 5208.52.4055.

[4] Category 317–O: all HTS numbers except 5208.59.2085.

[5] Category 326–O: all HTS numbers except 5208.59.2015, 5209.59.0015 and 5211.59.0015.

sublimits in the Fabric Group for Categories 313, 314, 315, 317 and 326.

Effective on June 2, 1998, you are directed to amend further the directive dated March 2, 1987 to require a part-category visa for products in Categories 313–O, 314–O, 315–O, 317–O and 326–O, produced or manufactured in Turkey and exported on or after March 27, 1998. There will be a grace period from March 27, 1998 through June 30, 1998 during which products exported from Turkey in Categories 313, 314, 315, 317 and 326 may be accompanied by the whole or new part-category visa.

Shipments entered or withdrawn from warehouse according to this directive which are not accompanied by an appropriate export visa shall be denied entry and a new visa must be obtained.

The Committee for the Implementation of Textile Agreements has determined that these actions fall within the foreign affairs exception to the rulemaking provisions of 5 U.S.C. 553(a)(1).

Sincerely,

Troy H. Cribb,

Chairman, Committee for the Implementation of Textile Agreements.

[FR Doc.98–13796 Filed 5–21–98; 8:45 am]

BILLING CODE 3510–DR–F

COMMODITY FUTURES TRADING COMMISSION

Chicago Board of Trade Futures Contracts in Corn and Soybeans; Order to Designate Contract Markets and Amendment Order of November 7, 1997, as Applied to Such Contracts; Correction

AGENCY: Commodity Futures Trading Commission.

ACTION: Final order to Chicago Board of Trade; correction.

SUMMARY: On May 13, 1998, the Commission published in the **Federal Register** (63 FR 26575) a final Order to the Chicago Board of Trade. The purpose of the Order was to designate the Chicago Board of Trade as a contract market in corn and soybeans futures contracts and amend the Order of November 7, 1997, as applied to such contracts. This correction includes Attachments 1 and 2 which were inadvertently omitted.

DATES: This Order became effective on May 7, 1998.

ADDRESSES: Commodity Futures Trading Commission, Three Lafayette Centre, 1155 21st Street, NW., Washington, DC 20581.

FOR FURTHER INFORMATION CONTACT: Steve Manaster, Director, or Paul M. Architzel, Chief Counsel, Division of Economic Analysis, Commodity Futures Trading Commission, Three Lafayette Centre, 1155 21st Street, NW., Washington, DC 20581, (202) 418–5260, or electronically, Mr. Architzel at [PArchitzel@cftc.gov].

SUPPLEMENTARY INFORMATION: The Commission is correcting inadvertent omissions in the publication of the final Order to the Chicago Board of Trade whereby the Commodity Futures Trading Commission ordered that the applications for contract market designation in corn and in soybeans submitted by the Board of Trade of the City of Chicago (CBT) on December 19, 1997 and supplemented on March 20, 1998, be granted and amended its Order under section 5a(a)(10), dated November 7, 1997, to permit the applications for designation to be granted. Under this Order, the Commission took the following actions:

(1) Granted under section 5 of the Commodity Exchange Act (Act) the CBT's application for designation as a contract market in soybeans and approved under section 5a(a)(12) of the Act all of the proposed rules of the contract market contained in Attachment 1 to the Order;

(2) Granted under section 5 of the Act the CBT's application for designation as a contract market in corn and approved under section 5a(a)(12) of the Act all of the proposed rules of the contract market contained in Attachment 2 to the Order;

The Commission is publishing Attachments 1 and 2 which were inadvertently omitted and were referred to on page 26575, column 3, paragraphs (1) and (2).

Issued in Washington, DC on May 14, 1998.

Jean A. Webb,

Secretary of the Commission, Commodity Futures Trading Commission.

Attachment 1—Proposed Soybean Futures Contract Rules

Soybean Futures

ChXS Trading Conditions

XS04.01 Unit of Trading—(see 1004.00)

XS05.01 Months Traded In—(see 1005.01A)

XS06.01 Price Basis—(see 1006.00 and 1006.01)

XS05.01 Hours of Trading—(see 1007.00 and 1007.02)

XS08.01 Trading Limits—(see 1008.01 and 1008.02)

XS09.01 Last Day of Trading—(see 1009.02 and 1009.03)

XS10.01 Margin Requirements—see 431.03)

XS11.01 Disputes—All disputes between interested parties may be settled by arbitration as provided in the Rules and Regulations.

XS12.01 Position Limits and Reportable Positions—(see 425.01)

ChXS Delivery Procedures

XS36.00 Grade Differentials—(see 1036.00)

XS36.01 Soybean Location Delivery Differentials—Soybeans for shipment from regular shipping stations located within the Chicago Switching District or the Burns Harbor, Indiana Switching District may be delivered in satisfaction of Soybean futures contracts at contract price, subject to the differentials for class and grade outlined above. Soybeans for shipment from regular shipping stations located within the Lockport-Seneca Shipping District may be delivered in satisfaction of soybean futures contracts at a premium of 2¢ per bushel over contract price, subject to the differentials for class and grade outlined above. Soybeans for shipment from regular shipping stations located within the Ottawa-Chillicothe Shipping District may be delivered in satisfaction of Soybean futures contracts at a premium of 2½¢ per bushel over contract price, subject to the differentials for class and grade outlined above. Soybeans for shipment from regular shipping stations located within the Peoria-Pekin Shipping District may be delivered in satisfaction of Soybean futures contracts at a premium of 3¢ per bushel over contract price, subject tot he differentials for class and grade outlined above. Soybeans for shipment from regular shipping stations located within the Havana-Grafton Shipping District may be delivered in satisfaction of soybean futures contracts at a premium of 3½¢ per bushel over contract price, subject to the differentials for class and grade outlined above. Soybeans for shipment from regular shipping stations located in the St. Louis-East St. Louis and Alton Switching Districts may be delivered in satisfaction of Soybean futures contracts at a premium of 6¢ per bushel over contract price, subject to the differentials for class and grade outlined above.

XS38.01 Grades—(see 1038.00 and 1038.01)

XS41.01 Delivery Points—Soybean Shipping Certificates shall specify shipment from one of the warehouses or shipping stations currently regular for delivery and located in one of the following territories:

A. Chicago and Burns Harbor, Indiana Switching District—When used in these Rules and Regulations, the Chicago Switching District will be that area

geographically defined by Tariff ICC WTL 8020-Series and that portion of the Illinois Waterway at or above river mile 304 which includes the Calumet Sag Channel and the Chicago Sanitary & Ship Canal. When used in these Rules and Regulations, Burns Harbor, Indiana Switching District will be that area geographically defined by the boundaries of Burns Waterway Harbor at Burns Harbor, Indiana which is owned and operated by the Indiana Port Commission.

B. Lockport-Seneca Shipping District—When used in these Rules and Regulations, the Lockport-Seneca Shipping District will be that portion of the Illinois Waterway below river mile 304 at the junction of the Calumet Sag Channel and Chicago Sanitary & Ship Canal and above river mile 244.6 at the Marseilles Lock and Dam. Shipping stations within the Lockport-Seneca Shipping District must deliver 5,000 bushel shipping certificates of a like kind and quality of grain in multiples of 55,000 bushes against the futures contracts.

C. Ottawa-Chillicothe Shipping District—When used in these Rules and Regulations, the Ottawa-Chillicothe Shipping District will be that portion of the Illinois Waterway below river mile 244.6 at the Marseilles Lock and Dam and at or above river mile 170 between Chillicothe and Peoria, IL. Shipping stations within the Ottawa-Chillicothe Shipping District must deliver 5,000 bushel shipping certificates of a like kind and quality of grain in multiples of 55,000 bushels against the futures contracts.

D. Peoria-Pekin Shipping District—When used in these Rules and Regulations, the Peoria-Pekin Shipping District will be that portion of the Illinois Waterway below river mile 170 between Chillicothe and Peoria, IL and at or above river mile 151 at Pekin, IL. Shipping stations within the Peoria-Pekin Shipping District must deliver 5,000 bushel shipping certificates of a like kind and quality of grain in multiples of 55,000 bushels against the futures contracts.

E. Havana-Grafton Shipping District—When used in these Rules and Regulations, the Havana-Grafton Shipping District will be that portion of the Illinois Waterway below river mile 151 at Pekin, IL to river mile 0 at Grafton, IL. Shipping stations within the Havana-Grafton Shipping District must deliver 5,000 bushel shipping certificates of a like kind and quality of grain in multiples of 55,000 bushels against the futures contracts.

F. St. Louis-East St. Louis and Alton Switching Districts—When used in these Rules and Regulations, St. Louis-East St. Louis and Alton Switching Districts will be that portion of the upper Mississippi River below river mile 218 at Grafton, IL and above river mile 170 at Jefferson Barracks Bridge in south St. Louis, MO. Shipping stations on the St. Louis-East St. Louis and Alton Switching Districts must deliver 5,000 bushel shipping certificates of a like kind and quality of grain in multiples of 55,000 bushels against the futures contracts.

XS43.01 Deliveries by Soybean Shipping Certificate—(see 1043.01)

XS43.02 Registration of Soybean Shipping Certificates—(see 1043.02)

XS43.03 Reissuance of Shipping Certificates—(see 1043.03)

XS44.01 Certificates Format—The following form of Soybean Shipping Certificate shall be used with proper designation, indicating shipping station.

Board of Trade of the City of Chicago Soybean Shipping Certificate for Delivery in Satisfaction of Contract for 5,000 Bushels of Soybeans

This certificate not valid unless registered by the Registrar of the Board of Trade of the City of Chicago.

_____

Soybeans Shipping Station of (grade) _____

Located at _____

Registered total daily rate of loading of _____ bushes.

Total rate of loading per day shall be in accordance with Regulation 1081.01 (12) G and H. A premium charge of $_____ cents per bushel per calendar day for each day is to be assessed starting the day after registration by the Registrar of this Certificate through the business day loading is complete.

For value received and receipt of this document properly endorsed and lien for payment of premium charges the undersigned shipper, regular for delivery under the Rules and Regulations of the Board of Trade of the City of Chicago, hereby agrees to deliver 5,000 bushels of Soybeans in bulk conforming to the standards of the Board of Trade of the City of Chicago and ship said Soybeans in accordance with orders of the lawful owner of this document and in accordance with Rules and Regulations of the Board of Trade of the City of Chicago. Delivery shall be by water or rail conveyance according to the registered loading capability of the shipper.

Signed at _____ this _____ day of _____, 19 ____

____ Chicago, Il or Burns Harbor, IN Switching District

____ Lockport-Seneca Shipping District

____ Ottawa-Chillicothe Shipping District

____ Peoria-Pekin Shipping District

____ Havana-Grafton Shipping District

____ St. Louis-East St. Louis and Alton Switching Districts

By _____

Authorized Signature of Issuer

Registration date _____

Registrar's Number _____

Registrar for Soybeans

Board of Trade of the City of Chicago

Registration canceled for purpose of shipment of Soybeans by owner of certificate or by issuer of certificate for purpose of withdrawal of certificate.

Cancellation Date _____

Registrar

All premium charges have been paid on Soybeans covered by this certificate from date of registration, not counting date of registration but counting date of payment.

Date_____ by _____

Date_____ by _____

Date_____ by _____

Date_____ by _____

Delivery of this Soybean Shipping Certificate to issuer is conditioned upon loading of Soybeans in accordance with Rules and Regulations of the Board of Trade of the City of Chicago and a lien is claimed until all loadings are complete and proper shipping documents presented accompanying demand draft for freight and premium charges due which I (we) agree to honor upon presentation.

_____

Owner of this Soybean Shipping Certificate or his duly authorized agent

Date_____, 19 _____

XS46.01 Location for Buying or Selling Delivery Instruments-(see 1046.00A)

XS47.01 Delivery Notices-(see 1047.01)

XS48.01 Method of Delivery-(see 1048.01)

XS49.01 Time of Delivery, Payment, Form of Delivery Notice-(see 1049.00)

XS49.02 Time of Issuance of Delivery Notice-(see 1049.01)

XS49.03 Buyer's Report of Eligibility to Receive Delivery-(see 1049.02)

XS49.04 Seller's Invoice to Buyers-(see 1049.03)

XS49.05 Payment-(see 1049.04)

XS50.01 Duties of Members-(see 1050.00)

XS51.01 Office Delivers Prohibited-(see 1051.01)

XS54.01 Failure to Accent Delivery-(see 1054.00 and 1054.00A)

XS56.01 Payment of Premium Charges-To be valid for delivery on futures contracts, all shipping certificates covering Soybeans under obligation for shipment must indicate the applicable premium charge. No shipping certificates shall be valid for delivery on futures contracts unless the premium charges on such Soybeans shall have been paid up to and including the 18th calendar day of the preceding month, and such payment endorsed on the shipping certificate. Unpaid accumulated premium charges at the posted rate applicable to the warehouse or

shipping station where the grain under obligation for shipment shall be allowed and credited to the buyer by the seller to and including date of delivery. Further, no shipping certificate shall be valid for delivery if the shipping certificate has expired prior to delivery or has an expiration date in the month in which delivered.

If premium charges are not paid on-time up to and including the 18th calendar day preceding the delivery months of March, July and September and by the first Calendar day of each of these delivery months, a late charge will apply. The late charge will be an amount equal to the total unpaid accumulated premium charges rates multiplied by the ''prime interest rate'' in effect on the day that the accrued premium charges are paid plus a penalty of 5 percentage points, all multiplied by the number of calendar days that premium is overdue, divided by 360 days. The terms ''prime interest rate'' shall mean the lowest of the rates announced by each of the following four banks at Chicago, Illinois, at its ''prime rate'': Bank of America-Illinois, the First National Bank of Chicago, Harris Trust & Savings Bank, and the Northern Trust Company.

The premium charges on Soybeans for delivery from regular shippers within the Chicago Switching District or the Burns Harbor, Indiana Switching District shall not exceed 12/100 of one cent per bushel per day.

The premium charges on Soybeans for delivery from regular shippers within the Lockport-Seneca Shipping District shall not exceed 10/100 of one cent per bushel per day.

The premium charges on Soybeans for delivery from regular shippers within the Ottawa-Chillicothe Shipping District shall not exceed 10/100 of one cent per bushel per day.

The premium charges on Soybeans for delivery from regular shippers within the Peoria-Pekin Shipping District shall not exceed 10/100 of one cent per bushel per day.

The premium charges on Soybeans for delivery from regular shippers within the Havana-Grafton Shipping District shall not exceed 10/100 of one cent per bushel per day.

The premium charges on Soybeans for delivery from regular shippers in the St. Louis-East St. Louis and Alton Switching Districts shall not exceed 10/100 of one cent per bushel per day.

ChXS Regularity of Issuers of Shipping Certificates

XS81.01 Regularity of Warehouses and Issuers of Shipping Certificates—

Persons operating grain warehouses or shippers who desire to have such warehouses or shipping stations made regular for the delivery of grain under the Rules and Regulations shall make application for an initial Declaration of Regularity on a form prescribed by the Exchange prior to May 1, 1994, and every even year thereafter, for a two-year term beginning July 1, 1994, and every even year thereafter, and at any time during a current term for the balance of that term. Regular grain warehouses or shippers who desire to increase their regular capacity during a current term shall make application for the desired amount of total regular capacity on the same form. Initial regularity for the current term and increases in regularity shall be effective either thirty days after a notice that a bona fide application has been received is posted on the floor of the exchange, or the day after the application is approved by the Exchange, whichever is later. Applications for a renewal of regularity shall be made prior to May 1, 1994, and every even year thereafter, for the respective years beginning July 1, 1994, and every even year thereafter, and shall be on the same form.

The following shall constitute the requirements and conditions for regularity:

(1) The warehouse or shipping station making application shall be inspected by the Registrar or the United States Department of Agriculture. Where application is made to list as regular a warehouse which is not regular at the time of such application, the applicant may be required to remove all grain from the warehouse and to permit the warehouse to be inspected and the grain graded, after which such grain may be returned to the warehouse and receipts issued therefor.

The operator of a shipping station issuing Soybean Shipping Certificates shall limit the number of Shipping Certificates issued to an amount not to exceed:

(a) 30 times his registered total daily rate of loading barges,

(b) a value greater than 25 percent of the operator's net worth,

(c) and in the case of Chicago, Illinois and Burns Harbor, Indiana Switching Districts only, his registered storage capacity.

The shipper issuing Soybean Shipping Certificates shall register his total daily rate of loading barges at his maximum 8 hour loadout capacity in an amount not less than:

(a) one barge per day at each shipping station within the Lockport-Seneca Shipping District, within the Ottawa-Chillicothe Shipping District, within the Peoria-Pekin Shipping District, within the Havana-Grafton Shipping District, and within the St. Louis-East St. Louis and Alton Switching Districts and

(b) three barges per day at each shipping station in the Chicago, Illinois and Burns Harbor, Indiana Switching District.

(2) Shippers located in the Chicago, Illinois and Burns Harbor, Indiana Switching District shall be connected by railroad tracks with one or more railway lines.

XS81.01(3) through XS81.01(12)G(8)—(see 1081.01(3) through 1081.01 (12)G(8))

XS81.01(12)G (9) In the event that it had been announced that river traffic will be obstructed for a period of fifteen days or longer as a result of one of the conditions of impossibility listed in regulation 1081.01(12)(G)(8) and in the event that the obstruction will affect a majority of regular shipping stations, then the following barge load-out procedures for soybeans shall apply to shipping stations upriver from the obstruction.

(a) The maker and taker of delivery may negotiate mutually agreeable terms of performance.

(b) If the maker and/or the taker elect not to negotiate mutually agreeable terms of performance, then the maker is obligated to provide the same quantity and like quality of grain pursuant to the terms of the shipping certificate(s) with the following exceptions and additional requirements:

(i) The maker must provide loaded barge(s) to the taker on the Illinois River between the lowest closed lock and St. Louis, inclusive, or on the Mid-Mississippi River between Lock 11 at Dubuque, Iowa and St. Louis, inclusive.

(ii) The loaded barge(s) provided to the taker must have a value equivalent to C.I.F. NOLA, with the maker of delivery responsible for the equivalent cost, insurance and freight.

(iii) The taker of delivery shall pay the maker 18¢ per bushel for Chicago and Burns Harbor Switching District shipping certificates, 16¢ per bushel for Lockport-Seneca District shipping certificates. 15½¢ per bushel for Ottawa-Chillicothe District shipping certificates, 15¢ per bushel for Peoria-Pekin District shipping certificates, and 14 ½¢ per bushel for Havana-Grafton District shipping certificates as a reimbursement for the cost of barge freight.

(c) In the event that the obstruction or condition of impossibility listed in regulation 1081.01(12)(G)(8) will affect a

majority of regular shipping stations, but no announcement of the anticipated period of obstruction is made, then shipment may be delayed for the number of days that such impossibility prevails.

XS81.01(12)H Barge Load-Out Rates for Soybeans—(see 1081.01(12)(H)

XS81.01(13) Location—For the delivery of Soybeans, regular warehouses or shipping stations may be located within the Chicago Switching District or within the Burns Harbor, Indiana Switching District or within the Lockport—Senaca Shipping District or within the Ottawa—Chillicothe Shipping District or within the Peoria-Pekin Shipping District or within the Havana-Grafton Shipping District or in the St. Louis-East St. Louis and Alton Switching Districts.

No such warehouse or shipping station within the Chicago Switching District shall be declared regular unless it is conveniently approachable by vessels of ordinary draft and has customary shipping facilities. Ordinary draft shall be defined as the lesser of (1) channel draft as recorded in the Lake Calumet Harbor Draft Gauge, as maintained by the Corps of Engineers, U.S. Army, minus one (1) foot, or (2) 20 feet.

Delivery in Burns Harbor must be made ''in store'' in regular elevators or by shipping certificate at regular shipping stations providing water loading facilities and maintaining water depth equal to normal seaway draft of 27 feet.

In addition, deliveries of grain may be made in regular elevators or shipping stations within the Burns Harbor Switching District PROVIDED that:

(a) When grain represented by shipping certificates is ordered out for shipment by a barge, it will be the obligation of the party making delivery to protect the barge freight rate from the Chicago Switching District (i.e. the party making delivery and located in the Burns Harbor Switching District will pay the party taking delivery an amount equal to all expenses for the movement of the barge from the Chicago Switching District, to the Burns Harbor Switching District and the return movement back to the Chicago Switching District).

If inclement weather conditions make the warehouse or shipping station located in the Burns Harbor Switching District unavailable for barge loadings for a period of five or more calendar days, the party making delivery will make grain available on the day following this five calendar day period to load into a barge at one mutually agreeable water warehouse or shipping station located in the Chicago Switching District; PROVIDED that the party making delivery is notified on the first day of that five-day period of inclement weather that the barge is available for movement but cannot be moved from the Chicago Switching District to the Burns Harbor Switching District, and is requested on the last day of this five day calendar period in which the barge cannot be moved.

(b) When grain represented by shipping certificates is ordered out for shipment by vessel, and the party taking delivery is a recipient of a split delivery of grain between a warehouse or shipping station located in Burns Harbor and a warehouse or shipping station in Chicago, and the grain in the Chicago warehouse or shipping station will be loaded onto this vessel; it will be the obligation of the party making delivery at the request of the party taking delivery to protect the holder of the shipping certificates against any additional charges resulting from loading at one berth in the Burns Harbor Switching District and at one berth in the Chicago Switching District as compared to a single berth loading at one location. The party making delivery, at his option, will either make the grain available at one water warehouse or shipping station operated by the party making delivery and located in the Chicago Switching District for loading onto the vessel, make grain available at the warehouse or shipping station in Burns Harbor upon the surrender of shipping certificates issued by other regular elevators or shipping stations located in the Chicago Switching District at the time vessel loading orders are issued, or compensate the party taking delivery in an amount equal to all applicable expenses, including demurrage charges, if any, for the movement of the vessel between a berth in the other switching district. On the day that the grain is ordered out for shipment by vessel, the party making delivery will declare the regular warehouse or shipping station in which the grain will be available for loading.

Delivery within the Lockport-Seneca Shipping District or within the Ottawa-Chilicothe Shipping District or within the Peoria-Pekin Shipping District of within the Havana-Grafton Shipping District must be made at regular shipping station providing water loading facilities and maintaining water depth equal to the draft of the Illinois River maintained by the Corp of Engineers

Delivery in the St. Louis-East St. Louis and Alton Switching Districts must be made at regular shipping stations providing water loading facilities and maintaining water depth equal to the draft of the Mississippi River maintained by the Corp of Engineers.

XS81.01(14) Billing—(see 1081.01(14)A and 1081.01(14)D

XS81.01(15) through XS81.01(17)—(see 1081.01(15) through 1081.01(17))

XS81.01A Inspection (see 1081.01A)

XS81.01B Billing When Grain is Loaded Out (see 1081.01B)

XS81.01C Car of Specified Capacity (see 1081.01C)

XS82.01 Insurance (see 1082.00)

XS83.01 Variation Allowed (See 1083.00)

XS83.02 Excess or Deficiency in Quantity (see 1083.01)

XS84.0 Revocation, Expiration or Withdrawal of Regularity (see 1084.01)

XS85.01 Application for Declaration of Regularity (see 1085.01)

XS86.01 Federal Warehouses (see 1086.01)

Attachment 2—Proposed Corn Futures Contract Rules

Corn Futures

ChXC Trading Conditions

XC01.01 Application of Regulations—Transactions in Corn futures shall be subject to the General Rules of the Association as far as applicable and shall also be subject to Regulations contained in this chapter which are exclusively applicable to trading in Corn.

XC04.01 Unit of Trading—(see 1004.00)

XC05.01 Months Traded In—(see 1005.01A)

XC06.01 Price Basis—(see 1006.00 and 1006.01)

XC07.01 Hours of Trading—(see 1007.00 and 1007.02)

XC08.01 Trading Limits—(see 1008.01 and 1008.02)

XC09.01 Last Day of Trading—(see 1009.02 and 1009.03)

XC10.01 Margin Requirements—(see 431.03)

XC11.01 Disputes—All disputes between interested parties may be settled by arbitration as provided in the Rules and Regulations.

XC12.01 Position Limits and Reportable Positions—(see 425.01)

ChXC Delivery Procedures

XC36.00 Grade Differentials—(see 1036.00)

XC36.01 Corn Locational Delivery Differentials—Corn for shipment from regular shipping stations located within the Chicago Switching District or the Burns Harbor, Indiana

Switching District may be delivered in satisfaction of corn futures contracts at contract price, subject to the differentials for class and grade outlined above. Corn for shipment from regular shipping stations located within the Lockport-Seneca Shipping District may be delivered in satisfaction of corn futures contracts at a premium of 2¢ per bushel over contract price, subject to the differentials for class and grade outlined above. Corn for shipment from regular shipping stations located within the Ottawa-Chillicothe Shipping District may be delivered in satisfaction of corn futures contracts at a premium of 2 ½¢ per bushel over contract price, subject to the differentials for class and grade outlined above. Corn for shipment from regular shipping stations located within the Peoria-Pekin Shipping District may be delivered in satisfaction of corn futures contracts at a premium of 3¢ per bushel over contract price, subject to the differentials for class and grade outlined above.

XC38.01 Grades—(see 1038.00 and 1038.01)

XC41.00 Delivery Points—Corn Shipping Certificates shall specify shipment from one of the warehouses or shipping stations currently regular for delivery and located in one of the following territories:

A. Chicago and Burns Harbor, Indiana Switching District—When used in these Rules and Regulations, the Chicago Switching District will be that area geographically defined by Tariff ICC WTL 8020-Series and that portion of the Illinois Waterway at or above river mile 304 which includes the Calumet Sag Channel and the Chicago Sanitary & Ship Canal. When used in these Rules and Regulations, Burns Harbor, Indiana Switching District will be that area geographically defined by the boundaries of Burns Waterway Harbor at Burns Harbor, Indiana which is owned and operated by the Indiana Port Commission.

B. Lockport-Seneca Shipping District—When used in these Rules and Regulations, the Lockport-Seneca Shipping District will be that portion of the Illinois Waterway below river mile 304 at the junction of the Calumet Sag Channel and the Chicago Sanitary & Ship Canal and above river mile 244.6 at the Marseilles Lock and Dam. Shipping stations within the Lockport-Seneca Shipping District must deliver 5,000 bushel shipping certificates of a like kind and quality of grain in multiples of 55,000 bushels against the futures contracts.

C. Ottawa-Chillicothe Shipping District—When used in these Rules and Regulations, the Ottawa-Chillicothe Shipping District will be that portion of the Illinois Waterway below river mile 244.6 at the Marseilles Lock and Dam and at or above river mile 170 between Chillicothe and Peoria, IL. Shipping stations within the Ottawa-Chillicothe Shipping District must deliver 5,000 bushel shipping certificates of a like kind and quality of grain in multiples of 55,000 bushels against the futures contracts.

D. Peoria-Pekin Shipping District—When used in these Rules and Regulations, the Peoria-Pekin Shipping District will be that portion of the Illinois Waterway below river mile 170 between Chillicothe and Peoria, IL and above river mile 151 at Pekin, IL. Shipping stations within the Peoria-Pekin Shipping District must deliver 5,000 bushel shipping certificates of a like kind and quality of grain in multiples of 55,000 bushels against the futures contracts.

XC43.01 Deliveries by Corn Shipping Certificate—(see 1043.01)

XC43.02 Registration of Corn Shipping Certificates—(see 1043.02)

XC43.03 Reissuance of Shipping Certificates—(see 1043.03)

XC44.01 Certificate Format—The following form of Corn Shipping Certificate shall be used with proper designation, indicating shipping station.

Board of Trade of The City of Chicago Corn Shipping Certificate For Delivery in Satisfaction of Contract for 5,000 Bushels of Corn

This certificate not valid unless registered by the Registrar of the Board of Trade of the City of Chicago.

_____
(grade)
Corn Shipping Station of _____
Located at _____

Registered total daily rate of loading of _____ bushels.

Total rate of loading per day shall be in accordance with Regulation 1081.01(12) G and H. A premium change of $_____ cents per bushel per calendar day for each day is to be assessed starting the day after registration by the Registrar of this Certificate through the business day loading is complete.

For value received and receipt of this document properly endorsed and lien for payment of premium charges the undersigned shipper, regular for delivery under the Rules and Regulations of the Board of Trade of the City of Chicago, hereby agrees to deliver 5,000 bushels of Corn in bulk conforming to the standards of the Board of Trade of the City of Chicago and ship said Corn in accordance with orders of the lawful owner of this document and in accordance with Rules and Regulations of the Board of Trade of the City of Chicago. Delivery shall be by water or rail conveyance according to the registered loading capability of the shipper.

Signed at _____ this _____ day of _____, 19____

____ Chicago, IL or Burns Harbor, IN Switching District
____ Lockport-Seneca Shipping District
____ Ottawa-Chillicothe Shipping District
____ Peoria-Pekin Shipping District

By _____
Authorized Signature of Issuer

Registration date _____
Registrar's Number _____
Registrar for Corn
Board of Trade of the City of Chicago

Registration canceled for purpose of shipment of Corn by owner of certificate or by issuer of certificate for purpose of withdrawal of certificate.

Cancellation Date _____

_____
Registrar

All premium charges have been paid on Corn covered by this certificate from date of registration, not counting date of registration but counting date of payment.

Date_____ by _____
Date_____ by _____
Date_____ by _____
Date_____ by _____

Delivery of this Corn Shipping Certificate to issuer is conditioned upon loading of Corn in accordance with Rules and Regulations of the Board of Trade of the City of Chicago and a lien is claimed until all loadings are complete and proper shipping documents presented accompanying demand draft for freight and premium charges due which I (we) agree to honor upon presentation.

_____
Owner of this Corn Shipping Certificate or his duty authorized agent

Date_____, 19____

XC46.01 Location for Buying or Selling Delivery Instruments—(see 1046.00A)

XC47.01 Delivery Notices—(see 1047.01)

XC48.01 Method of Delivery—(see 1048.01)

XC49.01 Time of Delivery, Payment, Form of Delivery Notice—(see 1049.00)

XC49.02 Time of Issuance of Delivery Notice—(see 1049.01)

XC49.03 Buyer's Report of Eligibility to Receive Delivery—(see 1049.02)

XC49.04 Seller's Invoice to Buyers—(see 1049.03)

XC49.05 Payment—(see 1049.04)

XC50.01 Duties of Members—(see 1050.00)

XC51.01 Office Deliveries Prohibited—(see 1051.01)

XC54.01 Failure to Accent Delivery—(see 1054.00 and 1054.00A)

XC56.01 Payment of Premium Charges—To be valid for delivery on futures contracts, all shipping certificates covering Corn under obligation for shipment must indicate the applicable premium charge. No shipping certificates shall be valid for delivery on futures contracts unless the premium charges on such Corn shall have been paid up to and including the 18th calendar day of the preceding month, and such payment endorsed on the shipping certificate. Unpaid accumulated premium charges at the posted rate applicable to the warehouse or shipping station where the grain under obligation for shipment shall be allowed and credited to the buyer by the seller to and including date of delivery. Further, no shipping certificate shall be valid for delivery if the shipping certificate has expired prior to delivery or has an expiration date in the month in which delivered.

If premium charges are not paid on-time up to and including the 18th calendar day preceding the delivery months of March, July and September and by the first calendar day of each of these delivery months, a late charge will apply. The late charge will be an amount equal to the total unpaid accumulated premium charges rates multiplied by the ''prime interest rate'' in effect on the day that the accrued premium charges are paid plus a penalty of 5 percentage points, all multiplied by the number of calendar days that premium is overdue, divided by 360 days. The terms ''prime interest rate'' shall mean the lowest of the rates announced by each of the following four banks at Chicago, Illinois, at its ''prime rate'': Bank of America-Illinois, The First National Bank of Chicago, Harris Trust & Savings Bank, and the Northern Trust Company.

The premium charges on Corn for delivery from regular shippers within the Chicago Switching District or the Burns Harbor, Indiana Switching District shall not exceed 12/100 of one cent per bushel per day.

The premium charges on Corn for delivery from regular shippers within the Lockport-Seneca Shipping District shall not exceed 10/100 of one cent per bushel per day.

The premium charges on Corn for delivery from regular shippers within the Ottawa-Chillicothe Shipping District shall not exceed 10/100 of one cent per bushel per day.

The premium charges on Corn for delivery from regular shippers within the Peoria-Pekin Shipping District shall not exceed 10/100 of one cent per bushel per day.

ChXC Regularity of Issuers of Shipping Certificates

XC81.01 Regularity of Warehouses and Issuers of Shipping Certificates—Persons operating grain warehouses or shippers who desire to have such warehouses or shipping stations made regular for the delivery of grain under the Rules and Regulations shall make application for an initial Declaration of Regularity on a form prescribed by the Exchange prior to May 1, 1994, and every even year thereafter, for a two-year term beginning July 1, 1994, and every even year thereafter, and at any time during a current term for the balance of that term. Regular grain warehouses or shippers who desire to increase their regular capacity during a current term shall make application for the desired amount of total regular capacity on the same form. Initial regularity for the current term and increases in regularity shall be effective either thirty days after a notice that a bona fide application has been received is posted on the floor of the exchange, or the day after the application is approved by the Exchange, whichever is later. Applications for a renewal of regularity shall be made prior to May 1, 1994, and every even year thereafter, for the respective years beginning July 1, 1994, and every even year thereafter, and shall be on the same form.

The following shall constitute the requirements and conditions for regularity:

(1) The warehouse or shipping station making application shall be inspected by the Registrar or the United States Department of Agriculture. Where application is made to list as regular a warehouse which is not regular at the time of such application, the applicant may be required to remove all grain from the warehouse and to permit the warehouse to be inspected and the grain graded, after which such grain may be returned to the warehouse and receipts issued therefor.

The operator of a shipping station issuing Corn Shipping Certificates shall limit the number of Shipping Certificates issued to an amount not to exceed:

(a) 30 times his registered total daily rate of loading barges,

(b) a value greater than 25 percent of the operator's net worth,

(c) and in the case of Chicago, Illinois and Burns Harbor, Indiana Switching Districts only, his registered storage capacity.

The shipper issuing Corn Shipping Certificates shall register his total daily rate of loading barges at his maximum 8 hour loadout capacity in an amount not less than:

(a) one barge per day at each shipping station within the Lockport-Seneca Shipping District, within the Ottawa-Chillicothe Shipping District, and within the Peoria-Pekin Shipping District and

(b) three barges per day at each shipping station in the Chicago, Illinois and Burns Harbor, Indiana Switching District.

(2) Shippers located in the Chicago, Illinois and Burns Harbor, Indiana Switching District shall be connected by railroad tracks with one or more railway lines.

XC81.01(3) through XC81.01(12)G(8)–(see 1081.01(3) through 1081.01(12)G(8))

XC81.01(12)G(9) In the event that it has been announced that river traffic will be obstructed for a period of fifteen days or longer as a result of one of the conditions of impossibility listed in regulation XC81.01(12)(G)(8) and in the event that the obstruction will affect a majority of regular shipping stations, then the following barge load-out procedures for corn shall apply to shipping stations upriver from the obstruction:

(a) The maker and taker of delivery may negotiate mutually agreeable terms of performance.

(b) If the maker and/or the taker elect not to negotiate mutually agreeable terms of performance, then the maker is obligated to provide the same quantity and like quality of grain pursuant to the terms of the shipping certificate(s) with the following exceptions and additional requirements:

(i) The maker must provide loaded barge(s) to the taker on the Illinois River between the lowest closed lock and St. Louis, inclusive, or on the Mid-Mississippi River between Lock 11 at Dubuque, Iowa and St. Louis, inclusive.

(ii) The loaded barge(s) provided to the taker must have a value equivalent to C.I.F. NOLA, with the maker of delivery responsible for the equivalent cost, insurance and freight.

(iii) The taker of delivery shall pay the maker 18¢ per bushel for Chicago and Burns Harbor Switching District shipping certificates, 16¢ per bushel for Lockport-Seneca District shipping certificates, 15½¢ per bushel for Ottawa-Chillicothe District shipping certificates, and 15¢ per bushel for Peoria-Pekin District shipping certificates as a reimbursement for the cost of barge freight.

(c) In the event that the obstruction or condition of impossibility listed in

regulation XC81.01(12)(G)(8) will affect a majority of regular shipping stations, but no announcement of the anticipated period of obstruction is made, then shipment may be delayed for the number of days that such impossibility prevails.

XC81.01(12)H Barge Load-Out Rates for Corn—(see 1081.01(12)H)

XC81.01(13) Location—For the delivery of corn, regular warehouses or shipping stations may be located within the Chicago Switching District or within the Burns Harbor, Indiana Switching District or within the Lockport-Seneca Shipping District, or within the Ottawa-Chillicothe Shipping District or within the Peoria-Pekin Shipping District.

No such warehouse or shipping station within the Chicago Switching District shall be declared regular unless it is conveniently approachable by vessels of ordinary draft and has customary shipping facilities. Ordinary draft shall be defined as the lesser of (1) channel draft as recorded in the Lake Calumet Harbor Draft Gauge, as maintained by the Corps of Engineers, U.S. Army, minus one (1) foot, or (2) 20 feet.

Delivery in Burns Harbor must be made ''in store'' in regular elevators or by shipping certificate at regular shipping stations providing water loading facilities and maintaining water depth equal to normal seaway draft of 27 feet.

In addition, deliveries of grain may be made in regular elevators or shipping stations within the Burns Harbor Switching District PROVIDED that:

(a) When grain represented by shipping certificates is ordered out for shipment by a barge, it will be the obligation of the party making delivery to protect the barge freight rate from the Chicago Switching District (i.e. the party making delivery and located in the Burns Harbor Switching District will pay the party taking delivery an amount equal to all expenses for the movement of the barge from the Chicago Switching District, to the Burns Harbor Switching District and the return movement back to the Chicago Switching District).

If inclement weather conditions make the warehouse or shipping station located in the Burns Harbor Switching District unavailable for barge loadings for a period of five or more calendar days, the party making delivery will make grain available on the day following this five calendar day period to load into a barge at one mutually agreeable water warehouse or shipping station located in the Chicago Switching District; PROVIDED that the party making delivery is notified on the first day of that five-day period of inclement weather that the barge is available for movement but cannot be moved from the Chicago Switching District to the Burns Harbor Switching District, and is requested on the last day of this five day calendar period in which the barge cannot be moved.

(b) When grain represented by shipping certificates is ordered out for shipment by vessel, and the party taking delivery is a recipient of a split delivery of grain between a warehouse or shipping station located in Burns Harbor and a warehouse or shipping station in Chicago, and the grain in the Chicago warehouse or shipping station will be loaded onto this vessel; it will be the obligation of the party making delivery at the request of the party taking delivery to protect the holder of the shipping certificates against any additional charges resulting from loading at one berth in the Burns Switching District and at one berth in the Chicago Switching District as compared to a single berth loading at one location. The party making delivery, at his option, will either make the grain available at one water warehouse or shipping station operated by the party making delivery and located in the Chicago Switching District for loading onto the vessel, make grain available at the warehouse or shipping station in Burns Harbor upon the surrender of shipping certificates issued by other regular elevators or shipping stations located in the Chicago Switching District at the time vessel loading orders are issued, or compensate the party taking delivery in an amount equal to all applicable expenses, including demurrage charges, if any, for the movement of the vessel between a berth in the other switching district. On the day that the grain is ordered out for shipment by vessel, the party making delivery will declare the regular warehouse or shipping station in which the grain will be available for loading.

Delivery within the Lockport-Seneca Shipping District, or within the Ottawa-Chillicothe Shipping District or within the Peoria-Pekin Shipping District must be made at regular shipping stations providing water loading facilities and maintaining water depth equal to the draft of the Illinois River maintained by the Corp of Engineers.

XC81.01(14) Billing—(see 1081.01(14)A and 1081.01(14)D)

XC81.01(15) through XC81.01(17)—(see 1081.01(15) through 1081.01(17))

XC81.01A Inspection (see 1081.01A)

XC81.01B Billing When Grain is Loaded Out (see 1081.01B)

XC81.01C Car of Specified Capacity (see 1081.01C)

XC82.01 Insurance (see 1082.00)

XC83.01 Variation Allowed (see 1083.00)

XC83.02 Excess or Deficiency in Quantity (see 108.01)

XC84.01 Revocation, Expiration or Withdrawal of Regularity (see 1084.01)

XC85.01 Application for Declaration of Regularity (see 1085.01)

XC86.01 Federal Warehouses (see 1086.01)

[FR Doc. 98–13335 Filed 5–21–98; 8:45 am]

BILLING CODE 6351–01–M

COMMODITY FUTURES TRADING COMMISSION

Sunshine Act Meeting

AGENCY HOLDING THE MEETING: Commodity Futures Trading Commission.

TIME AND DATE: 11:00 a.m., Friday, June 26, 1998.

PLACE: 1155 21st St., N.W., Washington, D.C., 9th Floor Conference Room.

STATUS: Closed.

MATTERS TO BE CONSIDERED: Surveillance Matters.

CONTACT PERSON FOR MORE INFORMATION: Jean A. Webb, 202–418–5100.

Jean A. Webb,

Secretary of the Commission.

[FR Doc. 98–13865 Filed 5–20–98; 12:55 pm]

BILLING CODE 6351–01–M

COMMODITY FUTURES TRADING COMMISSION

Sunshine Act Meeting

AGENCY HOLDING THE MEETING: Commodity Futures Trading Commission.

TIME AND DATE: 11:00 a.m., Friday, June 19, 1998.

PLACE: 1155 21st St., N.W., Washington, D.C., 9th Floor Conference Room.

STATUS: Closed.

MATTERS TO BE CONSIDERED: Surveillance Matters.

CONTACT PERSON FOR MORE INFORMATION: Jean A. Webb, 202–418–5100.

Jean A. Webb,

Secretary of the Commission.

[FR Doc. 98–13866 Filed 5–20–98; 12:55 pm]

BILLING CODE 6351–01–M

COMMODITY FUTURES TRADING COMMISSION

Sunshine Act Meeting

AGENCY HOLDING THE MEETING: Commodity Futures Trading Commission.

TIME AND DATE: 11:00 a.m., Friday, June 12, 1998.

PLACE: 1155 21st St., N.W., Washington, D.C., 9th Floor Conference Room.

STATUS: Closed.

MATTERS TO BE CONSIDERED: Surveillance Matters.

CONTACT PERSON FOR MORE INFORMATION: Jean A. Webb, 202–418–5100.

Jean A. Webb,

Secretary of the Commission.

[FR Doc. 98–13867 Filed 5–20–98; 12:54 pm]

BILLING CODE 6351–01–M

COMMODITY FUTURES TRADING COMMISSION

Sunshine Act Meeting

AGENCY HOLDING THE MEETING: Commodity Futures Trading Commission.

TIME AND DATE: 11:00 a.m., Friday, June 15, 1998.

PLACE: 1155 21st St., N.W., Washington, D.C., 9th Floor Conference Room.

STATUS: Closed.

MATTERS TO BE CONSIDERED: Surveillance Matters.

CONTACT PERSON FOR MORE INFORMATION: Jean A. Webb, 202–418–5100.

Jean A. Webb,

Secretary of the Commission.

[FR Doc. 98–13868 Filed 5–20–98; 12:54 pm]

BILLING CODE 6351–01–M

COMMODITY FUTURES TRADING COMMISSION

Sunshine Act Meeting

AGENCY HOLDING THE MEETING: Commodity Futures Trading Commission.

TIME AND DATE: 2:00 p.m., Monday, June 29, 1998.

PLACE: 1155 21st St., N.W., Washington, D.C., 9th Floor Conference Room.

STATUS: Closed.

MATTERS TO BE CONSIDERED: Adjudicatory Matters.

CONTACT PERSON FOR MORE INFORMATION: Jean A. Webb, 202–418–5100.

Jean A. Webb,

Secretary of the Commission.

[FR Doc. 98–13869 Filed 5–20–98; 12:54 pm]

BILLING CODE 6351–01–M

COMMODITY FUTURES TRADING COMMISSION

Sunshine Act Meeting

AGENCY HOLDING THE MEETING: Commodity Futures Trading Commission.

TIME AND DATE: 2:00 p.m., Monday, June 22, 1998.

PLACE: 1155 21st St., N.W., Washington, D.C., 9th Floor Conference Room.

STATUS: Closed.

MATTERS TO BE CONSIDERED: Adjudicatory Matters.

CONTACT PERSON FOR MORE INFORMATION: Jean A. Webb, 202–418–5100.

Jean A. Webb,

Secretary of the Commission.

[FR Doc. 98–13870 Filed 5–20–98; 12:53 pm]

BILLING CODE 6351–01–M

COMMODITY FUTURES TRADING COMMISSION

Sunshine Act Meeting

AGENCY HOLDING THE MEETING: Commodity Futures Trading Commission.

TIME AND DATE: 2:00 p.m., Monday, June 15, 1998.

PLACE: 1155 21st St., N.W., Washington, D.C., 9th Floor Conference Room.

STATUS: Closed.

MATTERS TO BE CONSIDERED: Adjudicatory Matters.

CONTACT PERSON FOR MORE INFORMATION: Jean A. Webb, 202–418–5100.

Jean A. Webb,

Secretary of the Commission.

[FR Doc. 98–13871 Filed 5–20–98; 12:53 pm]

BILLING CODE 6351–01–M

COMMODITY FUTURES TRADING COMMISSION

Sunshine Act Meeting

AGENCY HOLDING THE MEETING: Commodity Futures Trading Commission.

TIME AND DATE: 2:00 p.m., Monday, June 8, 1998.

PLACE: 1155 21st St., N.W., Washington, D.C., 9th Floor Conference Room.

STATUS: Closed.

MATTERS TO BE CONSIDERED: Adjudicatory Matters.

CONTACT PERSON FOR MORE INFORMATION: Jean A. Webb, 202–418–5100.

Jean A. Webb,

Secretary of the Commission.

[FR Doc. 98–13872 Filed 5–20–98; 12:53 pm]

BILLING CODE 6351–01–M

COMMODITY FUTURES TRADING COMMISSION

Sunshine Act Meeting

AGENCY HOLDING THE MEETING: Commodity Futures Trading Commission.

TIME AND DATE: 2:00 p.m., Monday, June 1, 1998.

PLACE: 1155 21st St., N.W., Washington, D.C., 9th Floor Conference Room.

STATUS: Closed.

MATTERS TO BE CONSIDERED: Adjudicatory Matters.

CONTACT PERSON FOR MORE INFORMATION: Jean A. Webb, 202–418–5100.

Jean A. Webb,

Secretary of the Commission.

[FR Doc. 98–13873 Filed 5–20–98; 12:53 pm]

BILLING CODE 6351–01–M

COMMODITY FUTURES TRADING COMMISSION

Sunshine Act Meeting

AGENCY HOLDING THE MEETING: Commodity Futures Trading Commission.

TIME AND DATE: 10:00 a.m., Thursday, May 28, 1998.

PLACE: 1155 21st St., N.W., Washington, D.C., 9th Floor Conference Room.

STATUS: Closed.

MATTERS TO BE CONSIDERED: Adjudicatory Matters.

CONTACT PERSON FOR MORE INFORMATION: Jean A. Webb, 202–418–5100.

Jean A. Webb,

Secretary of the Commission.

[FR Doc. 98–13874 Filed 5–20–98; 12:53 pm]

BILLING CODE 6351–01–M

DEPARTMENT OF DEFENSE

Office of the Secretary

Meeting of the Historical Records Declassification Advisory Panel

AGENCY: Department of Defense, Historical Advisory Committee.

ACTION: Notice.

SUMMARY: Notice is hereby given of the forthcoming meeting of the Historical Records Declassification Advisory Panel. The purpose of this meeting is to discuss recommendations to the Department of Defense on topical areas of interest that, from a historical perspective, would be of the greatest benefit if declassified. The OSD Historian will chair these meetings.

DATE: Friday, June 19, 1998.

TIME: Meeting will begin at 9:00 a.m.

ADDRESS: The National Archives Building, Room 410, 7th and Pennsylvania Avenue, N.W., Washington, D.C. 20408.

FOR FURTHER INFORMATION CONTACT: Cynthia Kloss, Room 3C281, Office of the Deputy Assistant Secretary of Defense (Intelligence & Security), Office of the Assistant Secretary of Defense (Command, Control, Communications and Intelligence), 6000 Defense Pentagon, Washington, DC 20301–6000, telephone (703) 695–2289/2686.

Dated: May 18, 1998.

L.M. Bynum,

Alternate OSD Federal Register Liaison Officer, Department of Defense.

[FR Doc. 98–13713 Filed 5–21–98; 8:45 am]

BILLING CODE 5000–04–M

DEPARTMENT OF DEFENSE

Office of the Secretary

Joint Service Committee on Military Justice: Public Meeting

AGENCY: Joint Service Committee on Military Justice (JSC).

ACTION: Notice of public meeting.

SUMMARY: This notice sets forth the schedule and proposed agenda for the 1998 annual public meeting of the JSC.This notice also describes the functions of the JSC.

DATES AND TIMES: Wednesday, 15 July 1998 at 2:00 p.m.

ADDRESSES: Room 808, 1501 Wilson Blvd, Arlington, VA 22209–2403.

FUNCTION: The JSC was established by the Judge Advocates General in 1972. The JSC currently operates under Department of Defense Directive 5500.17, May 8, 1996. The function of the JSC is to improve military justice through preparation and evaluation of proposed amendments and changes to the Uniform Code of Military Justice and the Manual for Courts-Martial.

AGENDA: The JSC will receive public comment concerning its 1998 draft review of the Manual for Courts-Martial as published on May 11, 1998.

This notice is provided in accordance with DoD Directive 5500.17, ''Role and Responsibilities of the Joint Service Committee (JSC) on Military Justice,'' May 8, 1996. This notice is intended only to improve the internal management of the Federal Government. It is not intended to create any right or benefit, substantive or procedural, enforceable at law by any party against the United States, its agencies, its officers, or any person.

FOR FURTHER INFORMATION CONTACT: LtCol Thomas C. Jaster, U.S. Air Force, Air Force Legal Services Agency, 112 Luke Avenue, Room 343, Bolling Air Force Base, Washington, DC 20332–8000, (202) 767–1539; FAX (202) 404–8755.

Dated: May 18, 1998.

L.M. Bynum,

Alternate OSD Federal Register Liaison Officer, Department of Defense.

[FR Doc. 98–13714 Filed 5–21–98; 8:45 am]

BILLING CODE 5000–04–M

DEPARTMENT OF DEFENSE

Department of the Air Force

Air Force A–76 Initiatives Cost Comparisons and Direct Conversions (As of April 1998)

Air Force is in the process of conducting the following A–76 initiatives. Cost comparisons are public-private competitions. Direct conversions are functions that may result in a conversion to contract without public competition. These initiatives were announced and in-progress as of April 1998, include the installation and state where the cost comparison is being performed, the total authorizations under study, public announcement date and anticipated solicitation date. The following initiatives are in various stages of completion.

COST COMPARISONS

Installation	State	Function(s)	Total authorizations	Public announcement date	Solicitation scheduled for
EIELSON AFB	AK	ADMINISTRATIVE TELEPHONE SWITCHBOARD.	10	18–Oct–96	01–Jul–98
ELMENDORF AFB	AK	ADMINISTRATIVE TELEPHONE SWITCHBOARD.	16	28–Jul–97	06–Apr–98
EIELSON AFB	AK	MILITARY FAMILY HOUSING MANAGEMENT	16	17–Nov–97	17–May–98
ELMENDORF AFB	AK	MILITARY FAMILY HOUSING MANAGEMENT	22	19–Sep–96	15–Apr–98
MARCH AFB	CA	BASE OPERATING SUPPORT	228	06–Jan–98	11–Apr–99
VANDENBERG AFB	CA	BASE OPERATING SUPPORT	211	29–Jul–96	15–Jan–98
VANDENBERG AFB	CA	CIVIL ENGINEERING	5	29–Jul–96	01–Nov–97
VANDENBERG AFB	CA	CIVIL ENGINEERING MATERIAL ACQUISITION.	12	06–May–96	30–Oct–97
LOS ANGELES AFS	CA	COMMUNICATIONS OPERATIONS AND MAINTENANCE FUNCTIONS.	85	01–Jul–97	30–Jul–98
LOS ANGELES AFS	CA	HOUSING MANAGEMENT	10	01–Jul–97	30–Jul–98
TRAVIS AFB	CA	MILITARY FAMILY HOUSING MAINTENANCE	38	05–May–97	25–Jun–97
LOS ANGELES AFS	CA	SERVICES ACTIVITIES	8	01–Jul–97	30–Jul–98
VANDENBERG AFB	CA	STRUCTURAL MAINTENANCE	32	06–May–96	30–Oct–97
VANDENBERG AFB	CA	TRAINER FABRICATION	12	24–Nov–97	01–Jan–99
ONIZUKA AFB	CA	UTILITIES PLANT	25	06–May–96	01–Nov–97
BUCKLEY ANGB	CO	AIRFIELD MANAGEMENT	34	22–Mar–95	01–Jul–98
PETERSON AFB	CO	BASE OPERATING SUPPORT	121	29–Jul–96	03–Jul–97
BUCKLEY ANGB	CO	CIVIL ENGINEERING	55	24–Nov–97	01–Jan–99
PETERSON AFB	CO	CIVIL ENGINEERING MATERIAL ACQUISITION.	8	29–Jul–96	09–Jan–98
FALCON AFB	CO	UTILITIES PLANT	21	06–May–96	01–Nov–97
DOVER AFB	DE	TRANSIENT AIRCRAFT MAINTENANCE/ AEROSPACE GROUND EQUIPMENT.	24	05–Sep–97	02–Jun–98
HOMESTEAD ARB	FL	BASE OPERATING SUPPORT	138	06–Jan–98	11–May–99
EGLIN AFB	FL	CIVIL ENGINEERING	96	03–Dec–96	15–Apr–98

COST COMPARISONS—Continued

Installation	State	Function(s)	Total authorizations	Public announcement date	Solicitation scheduled for
MACDILL AFB	FL	CIVIL ENGINEERING	310	06–Nov–97	26–Jan–99
HURLBURT FIELD	FL	COMMUNICATION FUNCTIONS	24	12–Nov–97	
HURLBURT FIELD	FL	ENVIRONMENTAL	13	23–Sep–97	20–Jul–98
PATRICK AFB	FL	HOUSING MANAGEMENT	7	29–Jul–96	15–Jan–98
DOBBINS ARB	GA	BASE OPERATING SUPPORT	120	06–Jan–98	02–Mar–98
ROBINS AFB	GA	EDUCATION SERVICES	29	28–Feb–97	28–Feb–98
RAMSTEIN AB	GERMY	MESS ATTENDANTS	33	10–Jul–96	01–Mar–97
SPANGDAHLEM AB	GERMY	MESS ATTENDANTS	16	10–Jul–96	01–Mar–97
RAMSTEIN AB	GERMY	MILITARY FAMILY HOUSING MAINTENANCE	142	19–Jun–97	01–Mar–98
HICKAM AFB	HI	BASE OPERATING SUPPORT	503	11–Mar–97	15–May–98
SCOTT AFB	IL	BASE SUPPLY	108	03–Jun–97	28–Aug–98
SCOTT AFB	IL	COMMUNICATIONS OPERATIONS AND MAINTENANCE FUNCTIONS.	181	19–Mar–98	
SCOTT AFB	IL	MEDICAL FACILITY MAINTENANCE	8	09–Jan–98	16–Jun–98
GRISSOM AFB	IN	BASE OPERATING SUPPORT	162	06–Jan–98	08–Jan–99
NEW ORLEANS NAS	LA	BASE OPERATING SUPPORT	59	13–Jun–96	10–Aug–99
WESTOVER AFB	MA	BASE OPERATING SUPPORT	189	06–Jan–98	10–May–98
HANSCOM AFB	MA	COMMUNICATION FUNCTIONS	93	28–Feb–97	15–Apr–98
HANSCOM AFB	MA	DATA PROCESSING	18	28–Feb–97	15–Apr–98
ANDREWS AFB	MD	AIRCRAFT MAINTENANCE AND SUPPLY	846	25–Jul–97	21–Dec–98
ANDREWS AFB	MD	MEDICAL FACILITY MAINTENANCE	11	09–Oct–97	04–Sep–98
MINN/ST PAUL IAP ARS	MN	BASE OPERATING SUPPORT	92	06–Jan–98	11–Aug–98
KEESLER AFB	MS	TECHNICAL TRAINING CENTER EQUIPMENT MAINTENANCE.	253	13–Jun–96	25–Aug–97
MALMSTROM AFB	MT	BASE COMMUNICATIONS	72	06–Oct–97	01–Jan–99
MALMSTROM AFB	MT	BASE SUPPLY	149	06–May–96	20–Dec–97
MALMSTROM AFB	MT	HEATING SYSTEMS	36	24–Nov–97	01–Jan–99
MULTIPLE INSTALLATIONS:	MULT:	ADMINISTRATIVE SWITCHBOARD	94	19–Jun–97	06–Jul–98
RAF MILDENHALL	UKING				
RAMSTEIN AB	GERMY				
SEMBACH AB	GERMY				
SPANGDAHLEM AB	GERMY				
MULTIPLE INSTALLATIONS:	MULT:	GENERAL LIBRARY	23	29–Jul–97	01–Apr–98
F E WARREN AFB	WY				
MALMSTROM AFB	MT				
PATRICK AFB	FL				
PETERSON AFB	CO				
VANDENBERG AFB	CA				
MULTIPLE INSTALLATIONS:	MULT:	TECHNICAL TRAINING-ELECTRONIC PRINCIPLES.	157	03–Dec–96	12–Sep–97
KEESLER AFB	MS	TRAINING.			
LACKLAND AFB	TX				
NEW BOSTON AS	NH	BASE OPERATING SUPPORT	48	03–Dec–97	16–Dec–98
NIAGRA FALLS IAP	NY	BASE OPERATING SUPPORT	29	06–Jan–98	30–Jan–98
OFFUTT AFB	NE	DATA AUTOMATION	346	24–Sep–97	29–May–98s
KIRTLAND AFB	NM	BASE COMMUNICATIONS	228	06–Nov–97	12–Jul–98
KIRTLAND AFB	NM	BASE SUPPLY	170	02–May–96	01–Jul–97
KIRTLAND AFB	NM	COMMUNICATION FUNCTIONS	54	29–Apr–97	02–Feb–98
CANNON AFB	NM	MILITARY FAMILY HOUSING MAINTENANCE	21	16–Apr–96	23–Jul–97
HOLLOMAN AFB	NM	MILITARY FAMILY HOUSING MAINTENANCE	66	12–May–97	07–Jul–98
WRIGHT PATTERSON AFB	OH	ACADEMIC AND PLATFORM INSTRUCTIONS	115	15–Aug–97	08–Sep–98
YOUNGSTOWN REGIONAL AIRPORT ARS.	OH	BASE OPERATING SUPPORT	89	13–Jun–96	12–Jun–99
WRIGHT PATTERSON AFB	OH	CIVIL ENGINEERING	698	15–Aug–97	08–Sep–98
TINKER AFB	OK	CIVIL ENGINEERING	567	15–Apr–97	13–Feb–98
GREATER PITTSBURG IAP	PA	BASE OPERATING SUPPORT	97	13–Jun–96	09–Feb–99
WILLOW GROVE ARS	PA	BASE OPERATING SUPPORT	67	13–Jun–96	11–Nov–98
CHARLESTON AFB	SC	MILITARY FAMILY HOUSING MAINTENANCE	14	23–Sep–97	20–Jun–98
SHAW AFB	SC	MILITARY FAMILY HOUSING MAINTENANCE	33	09–Jul–97	09–Jun–98
CARSWELL AFB	TX	BASE OPERATING SUPPORT	80	13–Jun–96	06–Feb–99
BROOKS AFB	TX	LABORATORY SUPPORT SERVICES	44	02–May–96	24–Jul–97
HILL AFB	UT	HEATING SYSTEMS	38	29–Apr–97	24–Jun–98
HILL AFB	UT	RECREATIONAL SUPPORT	7	02–May–96	24–Jun–98
LANGLEY AFB	VA	ADMINISTRATIVE TELEPHONE SWITCHBOARD.	18	05–Feb–98	01–Jun–98
LANGLEY AFB	VA	MILITARY FAMILY HOUSING MAINTENANCE	16	24–Nov–97	15–May–98
MCCHORD AFB	WA	HEATING SYSTEMS	11	23–Sep–97	01–Oct–98
MCCHORD AFB	WA	MILITARY FAMILY HOUSING MAINTENANCE	15	23–Sep–97	01–Oct–98
GENERAL MITCHELL IAP ARS	WI	BASE OPERATING SUPPORT	81	13–Jun–96	11–Jul–98

COST COMPARISONS—Continued

Installation	State	Function(s)	Total authorizations	Public announcement date	Solicitation scheduled for
F E WARREN AFB	WY	BASE COMMUNICATIONS	76	30–Oct–97	01–Jan–99
F E WARREN AFB	WY	BASE SUPPLY	157	01–Aug–96	01–Jan–98
F E WARREN AFB	WY	HEATING SYSTEMS	18	06–May–96	12–Mar–98

DIRECT CONVERSIONS

Installation	State	Function(s)	Total authorizations	Public announcement date	Solicitation scheduled for
EIELSON AFB	AK	TRANSIENT AIRCRAFT MAINTENANCE	14	18-Oct-96	01-Jul-98
ELMENDORF AFB	AK	TRANSIENT AIRCRAFT MAINTENANCE	12	10-Nov-97	12-Jun-98
DAVIS MONTHAN AFB	AZ	CIVIL ENGINEERING	5	24-Jan-97	30-Apr-98
DAVIS MONTHAN AFB	AZ	GENERAL LIBRARY	6	24-Jan-97	30-Apr-98
VANDENBERG AFB	CA	CIVIL ENGINEERING	9	29-Jul-96	16-Dec-97
TRAVIS AFB	CA	ENVIRONMENTAL	11	23-Sep-97	30-Sep-98
TRAVIS AFB	CA	FURNISHINGS MANAGEMENT	3	14-Mar-97	26-Feb-98
LOS ANGELES AFS	CA	PACKING AND CRATING	4	01-Jul-97	30-Apr-98
FALCON AFB	CO	COMMUNICATIONS OPERATIONS AND MAINTENANCE FUNCTIONS.	209	06-May-96	05-Jan-98
FALCON AFB	CO	ENGINEERING DATA CENTER	6	17-Nov-97	05-Jan-99
PETERSON AFB	CO	PACKING AND CRATING	9	10-Sep-97	01-Sep-98
PATRICK AFB	FL	CIVIL ENGINEERING MATERIAL ACQUISITION	6	06-May-96	30-Oct-97
MACDILL AFB	FL	MEDICAL TRANSCRIPTION CENTER	5	03-Jun-97	03-Oct-97
PATRICK AFB	FL	TRANSIENT AIRCRAFT MAINTENANCE	11	10-Sep-97	05-Jan-99
SCOTT AFB	IL	GROUNDS MAINTENANCE	3	17-Mar-97	01-Oct-98
AVIANO AB	ITALY	WAR RESERVE MATERIEL (WRM)	30	16-Aug-96	
BARKSDALE AFB	LA	CIVIL ENGINEERING	6	11-Jun-97	01-Jun-98
BARKSDALE AFB	LA	GENERAL LIBRARY	6	11-Jun-97	15-May-98
BARKSDALE AFB	LA	HOSPITAL SERVICES	3	01-Dec-97	15-Feb-98
ANDREWS AFB	MD	SOFTWARE PROGRAMMING	23	18-Jun-97	28-Jul-98
MULTIPLE INSTALLATIONS:	MULT:	COMMUNICATIONS OPERATIONS AND MAINTENANCE FUNCTIONS.	27	21-Feb-96	13-Nov-97
PRUEM AB	GERMY				
RAMSTEIN AB	GERMY				
SPANDAHLEM	GERMY				
MULTIPLE INSTALLATIONS:	MULT:	MAINTENANCE DATA AND TECHNICAL ORDER LIBRARY.	67	29-Jul-96	30-Sep-97
F E WARREN AFB	WY				
MALMSTROM AFB	MT				
MINOT AFB	ND				
VANDENBERG AFB	CA				
MCGUIRE AFB	NJ	GENERAL LIBRARY	6	17-Mar-97	28-May-98
SEYMOUR JOHNSON AFB	NC	GENERAL LIBRARY	7	11-Jun-97	14-Oct-97
SEYMOUR JOHNSON AFB	NC	TRANSIENT AIRCRAFT MAINTENANCE	8	12-Nov-97	25-Nov-98
OFFUTT AFB	NE	HOSPITAL MAINTENANCE	7	01-May-96	01-Mar-97
OFFUTT AFB	NE	PROTECTIVE COATING	8	11-Jun-97	01-May-98
NELLIS AFB	NV	WEAPONS SYSTEMS TRAINER OPERATIONS	14	12-Jun-97	07-Nov-97
KIRTLAND AFB	NM	DORMITORY MANAGEMENT	6	28-Feb-97	26-Mar-98
TINKER AFB	OK	GENERAL LIBRARY	5	01-Jul-96	06-Apr-98
ALTUS AFB	OK	MEDICAL STENOGRAPHY	2	17-Nov-97	10-Apr-98
NORTH FIELD AUXILIARY ACR FIELD.	SC	GROUNDS MAINTENANCE	1	14-Mar-97	27-Apr-98
CHARLESTON AFB	SC	HEATING SYSTEMS	9	14-Mar-97	18-May-98
INCIRLIK AB	TURKY	BASE OPERATING SUPPORT	220	08-Sep-97	21-Jul-97
INCIRLIK AB	TURKY	COMMUNICATION FUNCTIONS	56	08-Sep-97	01-May-98
RANDOLPH AFB	TX	FLYING TRAINING	45	20-Jan-98	03-Aug-98
RANDOLPH AFB	TX	GENERAL LIBRARY	7	03-Dec-96	15-Apr-98
HILL AFB	UT	FACILITIES SERVICES MAINTENANCE	4	10-Mar-97	24-Jun-98
HILL AFB	UT	GENERAL LIBRARY	5	02-May-96	02-May-98
HILL AFB	UT	HOUSING MANAGEMENT	8	10-Mar-97	24-Jun-98
LANGLEY AFB	VA	HOSPITAL SERVICES	6	01-Dec-97	15-Apr-98
MCCHORD AFB	WA	GENERAL LIBRARY	6	17-Mar-97	03-Oct-98
MCCHORD AFB	WA	GROUNDS MAINTENANCE	9	17-Mar-97	01-Apr-98
F E WARREN AFB	WY	FOOD SERVICES	17	29-Jul-97	01-Dec-98
F E WARREN AFB	WY	HOUSING MANAGEMENT	8	24-Nov-97	01-Jan-99

Barbara A. Carmichael,

Alternate Air Force Federal Register Liaison Officer.

[FR Doc. 98–13645 Filed 5–21–98; 8:45 am]

BILLING CODE 3910–01–P

DEPARTMENT OF DEFENSE

Department of the Air Force

The Community College of the Air Force (CCAF) Board of Visitors Meeting

The Community College of the Air Force (CCAF) Board of Visitors will hold a meeting on June 4, 1998 at 8:00 a.m. on the First Floor Conference Room, 363 Training Squadron, Bldg. 1025, Missile Road, Sheppard Air Force Base, Texas. The meeting will be open to the public.

The purpose of the meeting is to review and discuss academic policies and issues relative to the operation of the CCAF. Agenda items include a review of the operations of the CCAF and an update on the activities of the CCAF Policy Council.

Members of the public who wish to make oral or written statements at the meeting should contact 1st Lt Cornel Taite, Designated Federal Officer for the Board, at the address below no later than 4:00 p.m. on May 25,1998. Please mail or electronically mail all requests. Telephone requests will not be honored. The request should identify the name of the individual who will make the presentation and an outline of the issues to be addressed. At least 35 copies of the presentation materials must be given to 1st Lt Cornel Taite no later than three days prior to the time of the board meeting for distribution. Visual aids must be submitted to 1st Lt Cornel Taite on a 3 ½'' computer disc in Microsoft PowerPoint format no later than 4:00 p.m. on May 25, 1998 to allow sufficient time for virus scanning and formatting of the slides.

For further information, contact Lieutenant Cornel Taite, (334) 953–7322, Community College of the Air Force, 130 West Maxwell Boulevard, Maxwell Air Force Base, Alabama, 36112–6613, or through electronic mail at cotaite@max1.au.af.mil.

Barbara A. Carmichael,

Alternate Air Force Federal Register Liaison Officer.

[FR Doc. 98–13667 Filed 5–21–98; 8:45 am]

BILLING CODE 3910–01–P

DEPARTMENT OF DEFENSE

Department of the Army

Environmental Assessment and Finding of no Significant Impact for the Realignment of Missions and Personnel at Fort Meade, Maryland

AGENCY: Department of the Army, DoD.

ACTION: Notice of availability.

SUMMARY: In accordance with Public Law 101–510, the Defense Base Closure and Realignment Act of 1990, the Defense Base Closure and Realignment Commission recommended relocating the Defense Investigative Service (DIS) from Fort Holabird, Maryland, to a new facility to be built on Fort Meade, Maryland, and closing the leased space at Crown Ridge in Fairfax County, Virginia, and relocating the Information Systems Software Center (ISSC) to Fort Meade. ISSC has two component elements, the Software Development Center-Washington (SDC–W) and the Executive Software Systems Directorate (ESSD). The Commission also recommended realigning Fort Meade by eliminating inpatient services at Kimbrough Army Community Hospital (KACH) and reducing the facility to a clinic and outpatient surgical center.

An Environmental Assessment (EA) examined the proposed transfer of personnel and missions to 445 civilian and 67 military positions and Form 71 civilian and 57 military positions at Fort Meade, Maryland. Plans for relocation include construction of a new facility for the DIS in the Central Administrative Area and renovation of a portion of Pershing Hall to house the ISSC elements of SDC–W and ESSD. This allows for construction of DIS in a developed area and collocates the two ISSC functions in the same building, enhancing mission effectiveness.

No significant adverse impacts are anticipated from any of the alternatives analyzed in the EA. All of the alternatives, including the Army's preferred alternative, could result in some minor adverse impacts that can be avoided or minimized. Minor adverse impacts may occur in the areas of noise, stormwater, soil, traffic and transportation, and asbestos and lead-based paint management. Noise will be minimized by limiting construction hours. Stormwater and soil erosion control plans will minimize impacts to water resources. Asbestos and lead-based paint, if encountered during renovation, will be removed, encapsulated, or disposed of in accordance with all applicable laws. Additionally, the Fort Meade Transportation Master Plan will reduce impacts on traffic. Unsuitable soil, wetlands and cultural resources are present only on the DIS Alternative B site and would be avoided if that site were selected. Section 106 consultation with the Maryland State Historic Preservation Office has been completed for the preferred alternative sites.

Therefore, based on the analysis found in EA, which was incorporated into the Finding of No Significant Impact (FNSI), it has been determined that implementation of the proposed action will not have significant individual or cumulative impacts on the quality of the natural or the human environment. Because no significant environmental impacts will result from implementation of the proposed action, an Environmental Impact Statement is not required and will not be prepared.

DATES: Public comments must be submitted on or before June 22, 1998. The Army will not initiate the proposed action for 30 days following completion of the EA and publication of this Notice of Availability.

ADDRESSES: Individuals wishing to review the EA may obtain a copy and may provide comments during this 30-day period by writing to the U.S. Army Corps of Engineers, ATTN: Ms. Maria de la Torre (CENAB–PL–E), P.O. Box 1715, Baltimore, Maryland 21203–1715 or by sending a telefax to (410) 962–4698. Individuals wishing to review the EA may examine a copy at the following locations: Fort George G. Meade Library, Building 4418, Fort Meade, Maryland; and the Provinces Library, 2624 Annapolis Road, Severn, Maryland.

Dated: May 14, 1998.

Raymond J. Fatz,

Deputy Assistant Secretary of the Army, (Environment, Safety and Occupational Health) OASA (I,L&E).

[FR Doc. 98–13723 Filed 5–21–98; 8:45 am]

BILLING CODE 3710–08–M

DEPARTMENT OF DEFENSE

Department of the Army

Release of the Notice of Availability on the Final Environmental Impact Statement (Final EIS) on the Disposal and Reuse of Fort Ritchie, Maryland

AGENCY: Department of the Army, DoD.

ACTION: Notice of Availability.

SUMMARY: The proposed action evaluated by this Final EIS is the disposal of Fort Ritchie, Maryland, in accordance with the Defense Base Closure and Realignment Act of 1990, Public Law 101–510.

The EIS analyzes the environmental consequences of the disposal and subsequent reuse of the 638 acres comprising Fort Ritchie. Two disposal alternatives were analyzed: (1) The No Action Alternative, which entails maintaining the property in caretaker status after closure; and (2) the Encumbered Disposal Alternative, which entails transferring the property to future owners with Army-imposed limitations, or encumbrances, on the future use of the property. Additionally, the Final EIS analyses the potential environmental and socioeconomic consequences of three reuse alternatives: (1) Low Intensity Reuse Alternative; (2) Low-Medium Intensity Reuse Alternative; and (3) Medium Intensity Reuse Alternative. Disposal alternatives were developed by the Army. Reuse alternatives were developed by the Fort Ritchie Local Redevelopment Authority. The resources areas evaluated for potential impacts by the proposed action (disposal) and the secondary action (reuse) include: Land Use; Climate; Air Quality; Noise; Geology, Soils, and Topography; Water Resources; Infrastructure; Hazardous and Toxic Substances; Biological Resources and Ecosystems; Cultural Resources; Legacy Resources; Sociological Environment; Economic Development; Quality of Life; Installation Agreement, and Permits and Regulatory Authorizations. The Army's preferred alternative for disposal of Fort Ritchie is disposal with encumbered title on all Fort Ritchie property transfers. An encumbrance is any Army-imposed or legal constraint on the future use or development of the property. Encumbrances support future Army interests, regulatory and statutory compliance, promote continued protection of sensitive resources to foster environmentally sustainable redevelopment, hasten availability of property, or provide mitigation requirements. Encumbrances determined relevant in the EIS to disposal of Fort Ritchie relate to wetlands, historical resources, threatened and endangered species, utilities easements, easements and rights-of-way, access easements, utility interdependencies, remedial activities, and lead-based paint. Property will be remediated as appropriate and retained in caretaker status until transfer by encumbered title.

The Army proposes to make the 638 acres available for conveyance to, and subsequent reuse by, the Fort Ritchie Local Redevelopment Authority (LRA).

COPIES: Comments received on the Draft EIS have been considered and responses included in a document dated January 1998. This document, together with the Draft EIS dated July 1997, constitute the Final EIS. Copies of the January 1998 document, along with the July 1997 Draft EIS, will be available for review at the following locations: Adams County Library, Gettysburg, PA; Alexander Hamilton Library, Waynesboro, PA; Blue Ridge Summit Library, Blue Ridge Summit, PA; C. Burr Artz Central Library, Frederick, MD; Robert F. Barrick Library, Fort Ritichie, MD; and the Washington County Free Library, Hagerstown, MD.

DATES: Written pubic comments and suggestions received within 30 days of the publication of the Environmental Protection Agency's Notice of Availability for this action will be considered by the Army during final decision making.

ADDRESSES: A copy of the January 1998 document and the July 1997 Draft EIS, together which constitute the Final Impact Statement, may be obtained from, and comments provided to, the U.S. Army Corps of Engineers, ATTN: Mr. Clifford Kidd (CENAB–PL–EM), Baltimore District, P.O. Box 1715, Baltimore, Maryland 21203–1715, or by calling direct to (410) 962–3100.

Dated: May 14, 1998.

Raymond J. Fatz,

Deputy Assistant Secretary of the Army (Environment, Safety and Occupational Health) OASA (I,L&E).

[FR Doc. 98–13722 Filed 5–21–98; 8:45 am]

BILLING CODE 3710–08–M

DEPARTMENT OF DEFENSE

Department of the Army, Corps of Engineers

Notice of Availability and Public Hearings for Draft Environmental Impact Statement for Beaufort Sea Oil and Gas Development/Northstar Project, Beaufort Sea, Alaska

AGENCY: U.S. Army Corps of Engineers, DoD.

ACTION: Notice of availability.

SUMMARY: Pursuant to the National Environmental Policy Act of 1969 (NEPA), as amended (42 U.S.C. 4371 et seq.), the Army Corps of Engineers, Alaska District, in coordination with the Environmental Protection Agency (EPA); the Minerals Management Service (MMS); the U.S. Fish and Wildlife Service (USFWS); the National Marine Fisheries Service (NMFS); and the North Slope Borough as cooperating agencies, is issuing a Draft Environmental Impact Statement (DEIS) for oil and gas development activities within the Northstar Unit in the Beaufort Sea, Alaska.

DATES: Written comments on the DEIS, draft National Pollutant Discharge Elimination System (NPDES) permit, or draft 1422 Underground Injection Control (UIC) permit will be accepted during the public review period, beginning June 1, 1998 and ending July 30, 1998. All written comments on the DEIS and related federal permits and approvals should be sent to the Alaska District Army Corps of Engineers, Regulatory Branch no later than July 30, 1998.

FOR FURTHER INFORMATION CONTACT: Copies of the DEIS including appendices, or information on matters pertaining to this notice can be obtained on request from: Ms. Terry Carpenter, Project Manager, Alaska District Army Corps of Engineers, Regulatory Branch, P.O. Box 898, Anchorage, AK 99506–0898, fax (907) 753–5567.

SUPPLEMENTARY INFORMATION: 1. BP Exploration (Alaska) Inc. (BPXA) proposes to develop and produce oil and gas from the Northstar Unit, located between 2 and 8 miles offshore of Point Storkersen in the Alaskan Beaufort Sea. Oil and gas drilling, processing, and production is proposed to be located at Seal Island, a manmade gravel island built during the 1980s. BPXA's proposed project includes reconstructing and enlarging Seal Island and directionally drilling production, gas injection, and disposal wells from the island. Transportation of oil and gas would be by buried subsea pipelines from Seal Island to shore and above-ground pipelines from the shore to onshore facilities and the beginning of the TransAlaska Pipeline System (TAPS) at Pump Station 1.

2. Because this project represents the first development of Outer Continental Shelf oil and gas resources in the Alaskan Beaufort Sea, the DEIS addresses a range of potentially applicable technologies and development/production options and provides useful information to evaluate future development proposals.

3. Analysis of these options for the Northstar reservoir resulted in identification of 4 action alternatives for development/production of oil and gas from the Northstar Unit. The DEIS evaluates the impacts of the 4 action alternatives and a no action alternative, and identifies an environmentally preferred alternative.

4. The DEIS consists of 4 volumes, with an additional 3 volumes of appendices (A-Project Description; B-Biological Assessment; C-J-other

information, including NPDES documents). The DEIS Executive Summary can also be viewed at the following web site: http://www.northstareis.com.

5. Copies of the DEIS and appendices are also available for public review at:

a. Alaska Resources Library and Information Services, 3150 C Street, Suite 100, Anchorage, Alaska 99503.

b. Z.J. Loussac Library, 3600 Denali Street, Anchorage, Alaska 99503.

c. Tuzzy Consortium Library, Barrow, Alaska.

d. North Slope Borough Office, Barrow, Alaska.

e. Barrow City Office, Barrow, Alaska.

f. Alaska Eskimo Whaling Commission Office, Barrow, Alaska.

g. Nuiqsut City Office, Nuiqsut, Alaska.

h. Kaktovik City Office, Kaktovik, Alaska.

i. Noel Wien Public Library, 1215 Cowles Street, Fairbanks, Alaska 99701.

j. Valdez Consortium Library, P.O. Box 609, Valdez, Alaska 99686.

k. Juneau Public Library, 292 Marine Way, Juneau, Alaska 99801.

6. This DEIS is intended to meet the NEPA compliance and/or other public notice requirements for the following agency actions:

a. *Corps of Engineers:* Section 10, Rivers and Harbors Act; Section 404, Clean Water Act; Section 103, Marine Protection, Resources, and Sanctuary Act.

b. *Environmental Protection agency:* Section 402, Clean Water Act (NPDES); Part C, Safe Drinking Water Act (UIC).

c. *Minerals Management Service:* Outer Continental Shelf (OCS) Development and Production Plan.

7. EPA's draft 402 NPDES and UIC permits and explanatory fact sheets are included in this DEIS as Appendices F, G, H, and J and are intended for public review and comment.

8. The MMS is requesting comments on the Northstar Project Description (Appendix A of the DEIS, and analyzed as Alternative 2 in the DEIS). The Northstar development project includes drilling wells into, and producing oil from, two OCS leases, and requires an approved Development and Production Plan (DPP). The Northstar Project Description (Appendix A) was developed to meet the submission requirements under 30 CFR 250.34 for a DPP. The MMS has determined that the Project Description, in conjunction with the DEIS, meets the requirements under 30 CFR 250.34(f). The Northstar development offshore facilities will be located on State of Alaska submerged lands. An oil spill contingency plan will be submitted pursuant to 30 CFR 254.50 and 254.53. The plan will be reviewed under the State of Alaska Department of Environmental Conservation process, and is not part of either the DEIS or DPP.

9. No OCS action to approve, disapprove, or require modification to the DPP will be taken by MMS until the Final EIS is released. No OCS development and production activities can be conducted unless and until the DPP is approved as required by 30 CFR 250.34(1).

10. A Biological Assessment, as required by the Endangered Species Act, is included as Appendix B to the DEIS. This document will be used to initiate formal consultation under Section 7 of the Endangered Species Act with the USFWS and NMFS on three species: the endangered bowhead whale, and the threatened spectacled and Steller's eiders.

11. All written comments on the DEIS, draft NPDES permit, draft UIC permit, or DPP should be sent to: Ms. Terry Carpenter, Project Manager, Regulatory Branch, Alaska District Army Corps of Engineers, P.O. Box 898, Anchorage, AK 99506–0898. Comments specific to EPA's draft permit will be forwarded to EPA for their consideration, and those specific to MMS's DPP will be forwarded to MMS.

12. The U.S. Army Corps of Engineers will be conducting public workshops at 5 locations in Alaska early in the 60-day comment period. These workshops are intended to help the public become familiar with the DEIS and the draft NPDES and UIC permits.

13. To collect oral and written comments on the DEIS (Corps), the draft NPDES and UIC permits (EPA), or the DPP (MMS), separately scheduled public hearings will be held at the same 5 locations in Alaska. A court reporter will record the proceedings at each public hearing.

14. The public workshops and public hearings will be held on the following dates:

a. *Public Workshops:*

(1) Tuesday, June 23, 1998, 7:30 p.m.—Nuiqsut Community Center, Nuiqsut, Alaska.

(2) Wednesday, June 24, 1998, 6:00 p.m.—Kaktovik Community Center, Kaktovik, Alaska.

(3) Thursday, June 25, 1998, 7:30 p.m.—North Slope Borough Assembly Room, Barrow, Alaska.

(4) Tuesday, June 30, 1998, 7:00 p.m.—BLM Conference Room, Fairbanks, Alaska.

(5) Wednesday, July 1, 1998, 7:00 p.m.—Federal Building Conference Room, Anchorage, Alaska.

b. *Public Hearings:*

(1) Monday, July 13, 1998, 7:30 p.m.—North Slope Borough Assembly Room, Barrow, Alaska.

(2) Tuesday, July 14, 1998, 7:00 p.m.—Kaktovik Community Center, Kaktovik, Alaska.

(3) Wednesday, July 15, 1998, 7:00 p.m.—Nuiqsut Community Center, Nuiqsut, Alaska.

(4) Thursday, July 16, 1998, 7:00 p.m.—BLM Conference Room, Fairbanks, Alaska.

(5) Monday, July 20, 1998, 7:00 p.m.—Wilda Marston Theatre at Z.J. Loussac Library, Anchorage, Alaska.

15. An Inupiat translator will be available at the public hearings held in Barrow, Kaktovik and Nuiqsut. Oral and written comments on the DEIS received during the public review period will be addressed in the Final Environmental Impact Statement.

16. The federal permits and approvals are also subject to review for consistency with the State Coastal Management Program. Coastal Consistency review of the Northstar development project will be initiated on June 1, 1998 with release of the DEIS.

Gregory D. Showalter,

Army Federal Register Liaison Officer.

[FR Doc. 98–13751 Filed 5–21–98; 8:45 am]

BILLING CODE 3710–NL–P

DEPARTMENT OF DEFENSE

Department of the Navy

Public Hearing for the Draft Environmental Impact Statement for Increased Flight and Related Operations in the Patuxent River Complex, Patuxent River, MD

AGENCY: Department of the Navy, DOD.

ACTION: Announcement of public hearing.

SUMMARY: The Department of the Navy has prepared and filed with the Environmental Protection Agency the Draft Environmental Impact Statement (DEIS) for Increased Flight and Related Operations in the Patuxent River Complex, Patuxent River, MD. A public hearing will be held for the purpose to receive oral and written comments on the DEIS. Federal, state and local agencies, and interested individuals are invited to be present or represented at the hearing.

DATES: Hearing dates are as follows:

1. June 10, 1998, 7:00 to 8:30 p.m., Lusby, MD
2. June 15, 1998, 7:00 to 8:30 p.m., Cambridge, MD
3. June 17, 1998, 7:00 to 8:30 p.m., Heathsville, VA

ADDRESSES: Hearing locations are as follows:

1. Lusby—Patuxent High School, 12485 Rousby Hall Road, Lusby, MD
2. Cambridge—Cambridge-South Dorchester High School, 2474 Cambridge Bypass, Cambridge, MD
3. Heathsville—Northumberland High School, 6234 Northumberland Highway (US Route 360), Heathsville, VA

FOR FURTHER INFORMATION CONTACT: Ms. Sue Evans or Ms. Kelly Burdick, (888) 276–5201.

SUPPLEMENTARY INFORMATION: Pursuant to Council on Environmental Quality regulations (40 CFR Parts 1500–1508) implemental procedure provisions of the National Environmental Policy Act (NEPA), the Department of the Navy has prepared and filed with the U.S. Environmental Protection Agency the Draft Environmental Impact Statement (DEIS) for Increased Flight and Related Operations in the Patuxent River Complex, Patuxent River, MD. This notice announces the dates and locations of the public hearings.

The DEIS identifies and evaluates the potential environmental impacts of increasing flight and related ground operations in test areas of the Patuxent River Complex that are controlled and scheduled by the Naval Air Warfare Center, Aircraft Division (NAWCAD). The complex includes all the flight and ground test facilities at NAS Patuxent River and OLF Webster Field Annex, as well as the restricted airspaces, aerial and surface firing range, and targets (Hooper, Hannibal, and Tangier Island) comprising the Chesapeake Test Range (CTR). The DEIS assesses the impacts of the no action alternative and three proposed future operations workload alternatives. The no action alternative would maintain the complex's current level of flight hours into the future (18,400 annually, which represents an approximate ten-year average of annual flight hours). The three workload alternatives propose increases in baseline operations by as few as 2,500 annual flight hours or as many as 6,200 annual flight hours.

A Notice of Intent to prepare the EIS was published in the **Federal Register** on April 1, 1997 and five public scoping meetings were held between May 6 and May 15, 1997. A Notice of Availability of the DEIS was published in the **Federal Register** on May 15, 1998.

The DEIS has been distributed to various federal, state, and local agencies, elected officials, special interest groups, the public, and the media. In addition, copies are available for review at 18 repositories around the Chesapeake Bay:

—Anne Arundel South County Branch Library, Deale, MD.
—Caroline County Public Library, Denton, MD.
—Calvert County Public Library, Prince Frederick, MD.
—Dorchester County Central Library, Cambridge, MD.
—Somerset County Libraries, Deale Island, Princess Anne, and Ewell (Smith Island), MD.
—St. Mary's County Libraries, Lexington Park and Leonardtown, MD.
—St. Mary's College Library, St. Mary's City, MD.
—Talbot County Libraries, Easton and Oxford, MD.
—Worcester County Library, Pocomoke City, MD.
—Eastern Shore Public Library, Accomac, VA.
—Central Rappahannock Law Library, Fredericksburg, VA.
—Northumberland County Library, Heathsville, VA.
—Tangier Island Public School Library, Tangier, VA.
—Laurel Public Library, Laurel, DE.

Three public hearings will be held to inform the public of the DEIS findings and to solicit and receive oral and written comments. From 5:00 p.m. to 8:30 p.m., the Navy will set up information stations that will describe the findings of the DEIS. Navy staff will be available to answer questions from meeting attendees and receive comments. At 7:00 p.m., a formal public hearing will be held where oral statements will be heard and transcribed by a stenographer; however, to ensure accuracy of the record, all statements delivered at the public hearing should be submitted in writing. All comments, both oral and written, will become part of the public record in the study. In the interest of available time, each speaker will be asked to limit oral comments to three minutes. Longer comments should be summarized at the public hearing and submitted in writing either at the hearing or mailed to Ms. Sue Evans at Office of Legal Counsel, 47031 Liljencrantz Road, Bldg. 435, Mail Stop 39, Patuxent River, MD 20670–5440, fax (301) 342–1840. Written comments are requested not later than June 29, 1998.

Dated: May 19, 1998.

Lou Rae Langevin,

LT, JAGC, USN, Alternate Federal Register Liaison Officer.

[FR Doc. 98–13781 Filed 5–21–98; 8:45 am]

BILLING CODE 3810–FF–P

DEPARTMENT OF EDUCATION

Submission for OMB Review; Comment Request

AGENCY: Department of Education.

ACTION: Submission for OMB review; comment request.

SUMMARY: The Acting Deputy Chief Information Officer, Office of the Chief Information Officer, invites comments on the submission for OMB review as required by the Paperwork Reduction Act of 1995.

DATES: Interested persons are invited to submit comments on or before June 22, 1998.

ADDRESSES: Written comments should be addressed to the Office of Information and Regulatory Affairs, Attention: Danny Werfel, Desk Officer, Department of Education, Office of Management and Budget, 725 17th Street, NW., Room 10235, New Executive Office Building, Washington, DC 20503. Requests for copies of the proposed information collection requests should be addressed to Patrick J. Sherrill, Department of Education, 600 Independence Avenue, S.W., Room 5624, Regional Office Building 3, Washington, DC 20202–4651.

FOR FURTHER INFORMATION CONTACT: Patrick J. Sherrill (202) 708–8196. Individuals who use a telecommunications device for the deaf (TDD) may call the Federal Information Relay Service (FIRS) at 1–800–877–8339 between 8 a.m. and 8 p.m., Eastern time, Monday through Friday.

SUPPLEMENTARY INFORMATION: Section 3506 of the Paperwork Reduction Act of 1995 (44 U.S.C. Chapter 35) requires that the Office of Management and Budget (OMB) provide interested Federal agencies and the public an early opportunity to comment on information collection requests. OMB may amend or waive the requirement for public consultation to the extent that public participation in the approval process would defeat the purpose of the information collection, violate State or Federal law, or substantially interfere with any agency's ability to perform its statutory obligations. The Acting Deputy Chief Information Officer, Office of the Chief Information Officer, publishes this notice containing proposed information collection requests prior to submission of these requests to OMB. Each proposed information collection, grouped by office, contains the following: (1) Type of review requested, e.g., new, revision, extension, existing or reinstatement; (2) Title; (3) Summary of the collection; (4) Description of the

need for, and proposed use of, the information; (5) Respondents and frequency of collection; and (6) Reporting and/or Recordkeeping burden. OMB invites public comment at the address specified above. Copies of the requests are available from Patrick J. Sherrill at the address specified above.

Dated: May 19, 1998.

Hazel Fiers,

Acting Deputy Chief Information Officer, Office of the Chief Information Officer.

Office of Postsecondary Education

Type of Review: Revision.

Title: Application for Ability to Benefit Testing Approval.

Frequency: Annually.

Affected Public: Individuals or households; Businesses or other for-profits; Not-for-profit institutions.

Reporting and Recordkeeping Hour Burden:

Responses: 150,090.

Burden Hours: 77,040.

Abstract: The Secretary will publish a list of approved tests which can be used by postsecondary educational institutions to establish the ability to benefit for a student who does not have a high school diploma or its equivalent.

[FR Doc. 98–13766 Filed 5–21–98; 8:45 am]

BILLING CODE 4000–01–P

DEPARTMENT OF ENERGY

Agency Information Collection Extensions: Proposed Collection Comment Request

AGENCY: Office of Energy Efficiency and Renewable Energy, Department of Energy.

ACTION: Agency Information Collection Extensions: proposed collection comment request.

SUMMARY: The Department of Energy (DOE) has submitted an information collection package to the Office of Management and Budget (OMB) for extension under the Paperwork Reduction Act of 1995 (Pub. L. 104–13). The package covers the collection of information concerning annual applications from the owners of qualified renewable energy generation facilities for the consideration of renewable energy production incentive payments. This information is used by the Department to determine if the applicant's facility qualifies for these payments and to determine the amount of net electricity produced for sale that qualifies for these payments. This information is critical to ensure that the Government has sufficient information to ensure the proper use of public funds for these incentive payments.

DATES: Comments regarding the information collection package should be submitted to the OMB Desk Officer at the following address no later than June 22, 1998. If you anticipate that you will be submitting comments, but find it difficult to do so within the period of time allowed by this notice, you should advise the OMB Desk officer of your intention to do so as soon as possible. The Desk Officer may be telephoned at (202) 395–3084. (Also, please notify the DOE contact listed in this notice.)

ADDRESSES: Address comments to DOE Desk Officer, Office of Management and Budget, Office of Information and Regulatory Affairs (OIRA), Room 10102, New Executive Office Building, 725 17th Street, NW, Washington, DC 20503.

FOR FURTHER INFORMATION CONTACT: Robert H. Brewer, Office of Utility Technologies (EE–10), Department of Energy, Washington, DC 20585, (202) 586–2206.

SUPPLEMENTARY INFORMATION: The package contains the following information: (1) Title of the information collection package; (2) current OMB control number; (3) type of respondents; (4) estimated number of responses; (5) estimated total burden hours, including record keeping hours, required to provide the information; (6) purpose; and (7) number of collections.

Package Title: Renewable Energy Production Incentives.

Current OMB No.: 1910–0068.

Type of Respondents: State, municipal, county, and non-profit electric cooperative owners of qualified renewable energy generation facilities that produce electricity for sale.

Estimated Number of Respondents: 18

Estimated Total Burden Hours: 205

Purpose: To receive annual payment consideration for electricity produced in the prior fiscal year, an annual application has to be submitted by the owner/agent of the owner that provides information which establishes the qualification of the facility (ownership qualifications, type of renewable energy source used, time of first use for new or converted facilities, sale of electricity produced, and location in a State) and information on the metered/calculated amount of electricity produced. An owner of a qualified facility can submit an annual application for each of the first ten fiscal years of that facility's operation.

Statutory Authority: Paperwork Reduction Act of 1995, Pub. L. No 104–13, 44 U.S.C. 3507 (g) and (h).

Issued in Washington, DC, on May 18, 1998.

Dan W. Reicher,

Assistant Secretary, Energy Efficiency and Renewable Energy.

[FR Doc. 98–13729 Filed 5–21–98; 8:45 am]

BILLING CODE 6450–01–P

DEPARTMENT OF ENERGY

Office of Energy Efficiency and Renewable Energy

State Energy Program Special Projects Financial Assistance

AGENCY: The Department of Energy.

ACTION: Notice for second round funding for 1998 State Energy Program special projects.

SUMMARY: As options offered under the State Energy Program (SEP) for fiscal year 1998, the Office of Energy Efficiency and Renewable Energy is announcing the availability of financial assistance to States for special project activities for Remote Applications of Solar and Renewable Energy to Reduce or Avoid Diesel and Gasoline Power Generation. Funding is being provided by the Office of Utility Technologies in the Office of Energy Efficiency and Renewable Energy. States that are awarded funding for special projects will carry out their projects in conjunction with their efforts under SEP, with the special projects funding and activities tracked separately so that the end-use sector programs may follow the progress of their projects.

The projects must meet the relevant requirements of the program providing the funding, as well as of SEP, as specified in the program guidance/solicitation. Among the goals of the special projects activities are to assist States to: accelerate deployment of energy efficiency and renewable energy technologies; facilitate the acceptance of emerging and underutilized energy efficiency and renewable energy technologies; and increase the responsiveness of Federally funded technology development efforts to private sector needs.

DATES: The program guidance/solicitation is available on May 22, 1998. Applications must be received by July 20, 1998.

ADDRESSES AND FOR FURTHER INFORMATION CONTACT: Ms. Faith Lambert at the U.S. Department of Energy Headquarters, 1000 Independence Avenue, SW, Washington, DC 20585, (202) 586–2319, for referral to the appropriate DOE Regional Support Office.

SUPPLEMENTARY INFORMATION: Funding for this category of SEP Special Projects was offered in the original 1998 Special Projects notice published in the **Federal Register** dated December 4, 1997 (62 FR 64211). Applications received in response to that notice did not cover the total amount of funding available, so DOE is offering States another opportunity to apply for this category of Special Projects.

Availability of Fiscal Year 1998 Funds

With this publication, DOE is announcing the availability of at least $1,200,000 in financial assistance funds for fiscal year 1998. The awards will be made though a competitive process. The end-use sector program that is participating in this SEP special projects offering for fiscal year 1998, is:

- Utility Technologies: Projects to promote remote applications of solar and renewable energy to reduce or avoid diesel and gasoline power generation.

Restricted Eligibility

Eligible applicants for purposes of funding under this program are limited to the 50 States, the District of Columbia, Puerto Rico, or any territory or possession of the United States, specifically, the State energy or other agency responsible for administering the State Energy Program pursuant to 10 CFR part 420. For convenience, the term State in this notice refers to all eligible State applicants.

The Catalog of Federal Domestic Assistance number assigned to the State Energy Program is 81.041.

Requirements for cost sharing contributions will be addressed in the program guidance/solicitation for the special project activity, as appropriate. Cost sharing beyond any required percentage is desirable.

Any application must be signed by an authorized State official, in accordance with the program guidance/solicitation.

Evaluation Review and Criteria

A first tier review for completeness will occur at the appropriate DOE Regional Support Office. Applications found to be complete will undergo a merit review process by panels comprised of members representing the participating end-use sector program in DOE's Office of Energy Efficiency and Renewable Energy. A decision as to the applications selected for funding will then be made by the Director, Office of State and Community Programs, or designee, based on the findings of the technical merit review and any stated program policy factors. DOE reserves the right to fund, in whole or in part, any, all or none of the applications submitted in response to this notice.

More detailed information is available from the U.S. Department of Energy Headquarters at (202) 586–2319.

Issued in Washington, DC, on May 18, 1998.

Dan W. Reicher,

Assistant Secretary, Energy Efficiency and Renewable Energy.

[FR Doc. 98–13738 Filed 5–21–98; 8:45 am]

BILLING CODE 6450–01–P

DEPARTMENT OF ENERGY

Federal Energy Regulatory Commission

[Docket No. ER98–2498–000]

Cobisa-Person Limited Partnership; Notice of Filing

May 18, 1998.

Take notice that on April 22, 1998, the Public Service Company of New Mexico tendered for filing a Certificate of Concurrence the above-referenced docket.

Any person desiring to be heard or to protest said filing should file a motion to intervene or protest with the Federal Energy Regulatory Commission, 888 First Street, N.E., Washington, D.C. 20426, in accordance with Rules 211 and 214 of the Commission's Rules of Practice and Procedure (18 CFR 385.211 and 18 CFR 385.214). All such motions and protests should be filed on or before May 27, 1998. Protests will be considered by the Commission to determine the appropriate action to be taken, but will not serve to make protestants parties to the proceedings. Any person wishing to become a party must file a motion to intervene. Copies of this filing are on file with the Commission and are available for public inspection.

David P. Boergers,

Acting Secretary.

[FR Doc. 98–13692 Filed 5–21–98; 8:45 am]

BILLING CODE 6717–01–M

DEPARTMENT OF ENERGY

Federal Energy Regulatory Commission

[Docket No. EL98–10–001]

Pacific Gas and Electric Company; Notice of Filing

May 18, 1998.

Take notice that on April 20, 1998, Pacific Gas and Electric Company (PG&E), tendered for filing the following unilateral contracts between itself and the San Francisco Bay Area Rapid Transit District (BART): (1) A Service Agreement for Network Integration Transmission Service, and (2) a Network Operating Agreement.

PG&E is filing these Agreements in compliance with the Commission's March 20, 1998, Order Requiring Utility to Provide Network Transmission Service in Docket No. EL98–10–000. This Order required PG&E to file, within thirty days of the March 20, 1998, Order a network transmission service agreement for BART.

Copies of this filing have been served upon the California Public Utilities Commission, BART, the California Independent System Operator and other intervenors to this proceeding.

Any person desiring to be heard or to protest said filing should file a motion to intervene or protest with the Federal Energy Regulatory Commission, 888 First Street, N.E., Washington, D.C. 20426, in accordance with Rules 211 and 214 of the Commission's Rules of Practice and Procedure (18 CFR 385.211 and 18 CFR 385.214). All such motions and protests should be filed on or before May 29, 1998. Protests will be considered by the Commission to determine the appropriate action to be taken, but will not serve to make protestants parties to the proceedings. Any person wishing to become a party must file a motion to intervene. Copies of this filing are on the file with the Commission and are available for public inspection.

David P. Boergers,

Acting Secretary.

[FR Doc. 98–13690 Filed 5–21–98; 8:45 am]

BILLING CODE 6717–01–M

DEPARTMENT OF ENERGY

Federal Energy Regulatory Commission

[Docket No. ER98–1224–001]

Southern California Edison Company; Notice of Filing

May 18, 1998.

Take notice that on April 28, 1998, Southern California Edison Company tendered for filing executed copies of the Radial Line Agreements for the Coolwater Generating Station and Mandalay Generating Station in the above-referenced docket.

Any person desiring to be heard or to protest said filing should file a motion to intervene or protest with the Federal Energy Regulatory Commission, 888 First Street, N.E., Washington, D.C. 20426, in accordance with Rules 211

and 214 of the Commission's Rules of Practice and Procedure (18 CFR 385.211 and 18 CFR 385.214). All such motions and protests should be filed on or before May 29, 1998. Protests will be considered by the Commission to determine the appropriate action to be taken, but will not serve to make protestants parties to the proceedings. Any person wishing to become a party must file a motion to intervene. Copies of this filing are on file with the Commission and are available for public inspection.

David P. Boergers,

Acting Secretary.

[FR Doc. 98–13691 Filed 5–21–98; 8:45 am]

BILLING CODE 6717–01–M

ENVIRONMENTAL PROTECTION AGENCY

[FRL–6101–7]

Agency Information Collection Activities; Submission for OMB Review, Comment Request

AGENCY: Environmental Protection Agency (EPA).

ACTION: Notice.

SUMMARY: In compliance with the Paperwork Reduction Act (44 U.S.C. 3501 *et seq.*), this document announces that the following Information Collection Request (ICR) has been forwarded to the Office of Management and Budget (OMB) for review and approval: Superfund Site Evaluation and Hazard Ranking System, OMB Control No. 2050–0005 to expire on July 31, 1998. The ICR describes the nature of the information collection and its expected cost and burden; where appropriate, it includes the actual data collection instrument.

DATES: Comments must be submitted on or before June 22, 1998.

FOR FURTHER INFORMATION CONTACT: Contact Sandy Farmer at EPA by phone (202) 260–2740, by email at farmer.sandy@epamail.epa.gov, or download off the Internet at http://www.epa.gov/icr and refer to EPA ICR No. 1488.04.

SUPPLEMENTARY INFORMATION:

Title: Superfund Site Evaluation and Hazard Ranking System, (EPA ICR No. 1488.04, OMB Control No. 2050–0005) expiring July 31, 1998. This ICR requests an extension of a currently approved collection.

Abstract: Section 105 of the Comprehensive Environmental Response, Compensation, and Liability Act (CERCLA, 1980 and 1986) amends the National Oil and Hazardous Substances Contingency Plan (NCP) to include criteria prioritizing releases throughout the U.S. before undertaking remedial action at uncontrolled hazardous waste sites. The Hazard Ranking System (HRS) is a model that is used to evaluate the relative threats to human health and the environment posed by actual or potential releases of hazardous substances, pollutants, and contaminants. The HRS criteria take into account the population at risk, the hazard potential of the substances, as well as the potential for contamination of drinking water supplies, direct human contact, destruction of sensitive ecosystems, damage to natural resources affecting the human food chain, contamination of surface water used for recreation or potable water consumption, and contamination of ambient air.

Under this ICR the States will apply the HRS by identifying and classifying those releases that warrant further investigation. The HRS score is crucial since it is the primary mechanism used to determine whether a site is eligible to be included on the National Priorities List (NPL). Only sites on the NPL are eligible for Superfund-financed remedial actions.

HRS scores are derived from the sources described in this information collection, including field reconnaissance, taking samples at the site, and reviewing available reports and documents. States record the collected information on HRS documentation worksheets and include this in the supporting reference package. States then send the package to the EPA region for a completeness and accuracy review, and the Region then sends it to EPA Headquarters for a final quality assurance review. If the site scores above the NPL designated cutoff value, and if it meets the other criteria for listing, it is then eligible to be proposed on the NPL.

An Agency may not conduct or sponsor, and a person is not required to respond to, a collection of information unless it displays a currently valid OMB control number. The OMB control numbers for EPA's regulations are listed in 40 CFR part 9 and 48 CFR Chapter 15. The **Federal Register** Notice required under 5 CFR 1320.8(d), soliciting comments on this collection of information was published on March 4, 1998 (63 FR 10607). Three requests for copies of the ICR were received; however, EPA received no comments.

Burden Statement: Depending on the number and type of activities performed, burden for the collection of site assessment information is estimated to range from 53 to 1,899 hours per site. The number of hours required to assess a particular site depends on how far a site progresses through the site assessment process. Sites where only a pre-CERCLIS screening is performed will typically require approximately 53 hours, while sites that progress to NPL listing will require approximately 1,899 hours. The burden estimates include reporting activities and minimal record keeping activities. The States are reimbursed 100 percent of their costs, except for record maintenance. The ICR does not impose burden for HRS activities on local governments or private businesses. This includes the time needed to review instructions; develop, acquire, install, and utilize technology and systems for the purposes of collecting, validating, and verifying information, processing and maintaining information, and disclosing and providing information; adjust the existing ways to comply with any previously applicable instructions and requirements; train personnel to be able to respond to a collection of information; search data sources; complete and review the collection of information; and transmit or otherwise disclose the information.

Respondents: State agencies or Indian Tribes requesting oversight of the site.

Estimated Number of Respondents: 60 States or Indian Tribes.

Estimated Total Annual Burden on Respondents: 203,373 hours.

Estimated Total Annualized Cost Burden: 0 (reimbursed by EPA).

Frequency of Response: Periodically/Per SARA Section 116(b).

Send comments on the Agency's need for this information, the accuracy of the provided burden estimates, and any suggested methods for minimizing respondent burden, including through the use of automated collection techniques to the following addresses. Please refer to EPA ICR No. 1488.04 and OMB Control No. 2050–0005 in any correspondence.

Ms. Sandy Farmer,

U.S. Environmental Protection Agency,

OPPE Regulatory Information Division (2137),

401 M Street, S.W.,

Washington, DC 20460;

and

Office of Information and Regulatory Affairs,

Office of Management and Budget,

Attention: Desk Officer for EPA,

725 17th Street, NW.,

Washington, DC 20503.

Dated: May 18, 1998.

Richard T. Westlund,

Acting Director, Regulatory Information Division.

[FR Doc. 98–13786 Filed 5–21–98; 8:45 am]

BILLING CODE 6560–50–P

ENVIRONMENTAL PROTECTION AGENCY

[ER–FRL–5492–1]

Environmental Impact Statements; Notice of Availability

Responsible Agency: Office of Federal Activities, General Information (202) 564–7167 or (202) 564–7153.

Weekly receipt of Environmental Impact Statements

Filed May 11, 1998 Through May 15, 1998

Pursuant to 40 CFR 1506.9.

EIS No. 980178, Final EIS, NOA, MA, New Bedford Harbor Environment Restoration Plan, Implementation, Acushnet River, Buzzards Bay, MA, Due: June 22, 1998, Contact: Rolland A. Schmitten (301) 713–2239.

EIS No. 980179, Final EIS, AFS, MT, Meadow Timber Sales, Implementation, Timber Harvesting, Road Construction and Prescribed Burning, Fortine Ranger District, Kootenai National Forest, Lincoln County, MT, Due: June 22, 1998, Contact: Joleen Durham (406) 882–4451.

EIS No. 980180, Draft EIS, FHW, MO, US 60 Highway Project, Improvement from East of Willow Springs to West of Van Buren, Funding, NPDES Permit and COE 404 Permit, Howell, Shannon and Carter Counties, MO, Due: July 6, 1998, Contact: Don Neumann (573) 636–7104.

EIS No. 980181, Final EIS, USA, MD, PA, MD, PA, Fort Ritchie Disposal and Reuse for BRAC of 638 Acres, Implementation, Frederick and Washington Counties, MD and Adams and Franklin Counties, PA, Due: June 22, 1998, Contact: Clifford Kidd (410) 962–3100.

EIS No. 980182, Draft EIS, BLM, CA, Telephone Flat Geothermal Power Plant within the Glass Mountain Known Geothermal Resource Area, Construction, Operation and Decommissioning of a 48 megawatt (MW) Geothermal Plant, Modoc National Forest, Siskiyou County, CA, Due: July 22, 1998, Contact: Randall Sharp (520) 233–8848.

EIS No. 980183, Final Supplement EIS, FHW, NC, Smith Creek Parkway, Updated and Supplemental Information, Construction from Third Street to Kornegay Avenue, U.S. Coast Guard Permit, COE Section 10 and 404 Permits, Wilmington, Hanover County, NC, Due: June 22, 1998, Contact: Nicholas L. Graf (919) 856–4346.

EIS No. 980184, Final EIS, SCS, NB, KS, Turkey Creek Watershed Plan, Watershed Protection and Flood Protection, Johnson and Pawnee Counties, NB and Marshall and Nemaha Counties, KS, Due: June 22, 1998, Contact: Craig Derickson (402) 437–4112.

EIS No. 980185, Final EIS, BLM, CA, NV, Rangeland Health Standards and Guidelines for Livestock Grazing on Public Rangelands in California and Northwestern Nevada, CA and NV, Due: June 22, 1998, Contact: James Morrison (916) 978–4642.

EIS No. 980186, Draft EIS, UAF, ND, Minuteman III Missile System Dismantlement, Intercontinental Ballistic Missile (ICBM) Launch Facilities (LFs) and Missile Alert Facilities (MAFs), Deployment Areas, Grand Forks Air Force Base, ND, Due: July 6, 1998, Contact: Jonathan D. Farthing (210) 536–3069.

EIS No. 980187, Final EIS, AFS, AK, Chasina Timber Sale, Harvesting Timber and Road Construction, Tongass National Forest, Craig Ranger District, Ketchikan Administrative Area, AK, Due: June 22, 1998, Contact: Norm Matson (907) 228–6273.

EIS No. 980188, Final EIS, COE, NY, Atlantic Coast of Long Island Jones Inlet to East Rockaway Inlet Storm Damage Reduction Project, Construction, Long Beach Island, Nassau County, NY, Due: June 22, 1998, Contact: Steven Sinkevich (212) 264–2198.

EIS No. 980189, Draft Supplement EIS, HI Ma'aLaea Harbor Improvements for Light-Draft-Vessels, Entrance Channel Realignment and Breakwater Modification, Additional Information, Island of Maui, Maui County, HI, Due: July 6, 1998, Contact: Benton Ching (808) 438–1157.

Dated: May 19, 1998.

Anne Norton Miller,

Deputy Director, Office of Federal Activities.

[FR Doc. 98–13779 Filed 5–21–98; 8:45 am]

BILLING CODE 6560–50–U

ENVIRONMENTAL PROTECTION AGENCY

[ER–FRL–5492–2]

Environmental Impact Statements and Regulations; Availability of EPA Comments

Availability of EPA comments prepared May 4, 1998 Through May 8, 1998 pursuant to the Environmental Review Process (ERP), under Section 309 of the Clean Air Act and Section 102(2)(c) of the National Environmental Policy Act as amended. Requests for copies of EPA comments can be directed to the Office of Federal Activities at (202) 564–7167.

An explanation of the ratings assigned to draft environmental impact statements (EISs) was published in FR dated April 10, 1998 (63 FR 17856).

Draft EISs

ERP No. D–AFS–B61023–NH

Rating EC2, Waterville Valley Ski Resort Project, Development of Snowmaking Water Impoundments Project, Special-Use-Permits, Dredge and Fill Permit and COE Section 404 Permit, White Mountain National Forest, Pemigewasset Ranger District, Town of Waterville Valley, Grafton County, NH.

Summary: EPA expressed environmental concerns and suggested that the impact to water quality from alternatives two and four be further developed in the FEIS. EPA recommended mitigation option two to offset unavoidable wetland impacts associated with the project.

ERP No. D–COE–K32050–CA

Rating EO2, Oakland Harbor Inner and Outer Deep Navigation (–50 Foot) Improvement Project, Implementation, Feasibility Study, Port of Oakland, Alameda and San Francisco Counties, CA.

Summary: EPA expressed environmental objections due to potential air quality impacts, especially emissions of oxides of nitrogen (NOx) associated with dredging, dredged material transport/disposal and related construction work. Despite these significant NOx emissions, there is no indication from the DEIS that NOx mitigation measures proposed by the Corps would suffice for purposes of making a positive conformity finding. EPA expressed serious concerns that the EIS may have unnecessarily constrained the range of reasonable action alternatives by eliminating a detailed analysis of dredge depths less than –50 feet. EPA asked the Corps to determine

if other dredging alternatives that provide less depth overall, less depth over portions of the project and/or phasing in –50 foot depths at key areas first may constitute reasonable alternatives for purposes of NEPA analysis.

ERP No. D–COE–K36124–CA

Rating EC2, Yuba River Basin Investigation Study, Flood Protection, also portions of the Feather River Basin below Oroville Dam, City of Maryville, Yuba County, CA.

Summary: EPA expressed environmental concerns over potential adverse impacts to water quality due to stormwater runoff during construction activities. EPA also recommended that the Corps conduct the necessary hazardous, toxic and radioactive waste site investigations during the current feasibility phase in order to achieve full public disclosure. EPA also recommended that the FEIS analyze the indirect/cumulative effects of induced growth in the floodplain.

ERP No. D–COE–K36125–CA

Rating EC2, Hansen Dam Water Conservation and Supply Study, Flood Protection, Implementation, Los Angeles County, CA.

Summary: EPA expressed environmental concerns that the DEIS did not specifically analyze an ''end of pipe'' water conservation alternative as an alternative to increasing water supply, or as a means of augmenting water conservation, at Hansen Dam. EPA believed that an actual ''end of pipe'' water conservation alternative may constitute a reasonable alternative for purposes of the Corps' NEPA analysis. EPA noted that the three action alternatives analyzed in detail in the DEIS are not true ''water conservation'' alternatives but are actually alternatives to ''increase storage capacity'' at Hansen Dam for release during peak summer use periods. Implementation and/or expansion of water conservation programs and efforts in the dam's service area should be an integral element of the project.

ERP No. D–COE–K39047–CA

Rating EO2, Santa Clara River and Major Tributaries Project, Approval of 404 Permit and 1603 Streambed Alteration Agreement, In portions of the City of Santa Clarita, Los Angeles County, CA.

Summary: EPA expressed environmental objection because of the project's potential to adversely impact the physical and biological qualities of the Santa Clara River System and because the measures to avoid and/or mitigate such impacts were not fully developed and presented in the DEIS. EPA also expressed concern that the DEIS did not address the full scope of the anticipated (development-related) actions and impacts directly and indirectly associated with the proposed project.

ERP No. D–FAA–E51045–FL

Rating EC2, Miami International Airport Master Plan Update for the Proposed New Runway, Funding and COE Section 404 Permit, Miami-Dade County, FL.

Summary: EPA continued to have environmental concerns; though noise impacts will be reduced by the year 2000 and 2005, significant noise-impacts to the adjacent community remain. The need for additional noise mitigation was stated.

ERP No. D–FRC–L05219–WA

Rating LO, Sullivan Creek Hydroelectric (FERC No. 2225) Project, An Application for Amendment of License, Public Utility District No. 1, Sullivan Creek, Pend Oreille County, WA.

Summary: EPA had no objection to the project as proposed. No formal comment letter was sent to the preparing agency.

ERP No. DS–COE–C32030–00

Rating LO, Arthur Kill Channel-Howland Hook Marine Terminal, Deepening and Realignment, Limited Reevaluation Report (LRR) Port of New York and New Jersey, NY and NJ.

Summary: EPA believed that there has not been a significant change in the environmental conditions of the project area since the issuance of the FEIS. EPA does not anticipate that the proposed project would result in significant adverse environmental impacts. Therefore, EPA has no objection to the project's implementation.

Final EISs

ERP No. F–AFS–L65292–ID

Caribou National Forest, Implementation, Federal Phosphate Leasing Proposal for the Manning Creek and Dairy Syncline Tracts, Caribou County, ID.

Summary: Review of the Final EIS was not deemed necessary. No formal comment letter was sent to the preparing agency.

ERP No. F–USN–C11013–NY

Naval Weapons Industrial Reserve Plant Calverton Disposal and Reuse, Implementation, Towns of Riverhead and Brookhaven on Long Island, Suffolk County, NY.

Summary: EPA continued to express environmental concern regarding wetland avoidance and requested that the Record of Decision include additional information on contaminant remediation, endangered/threatened species, historic/cultural resources and environmental justice.

Dated: May 19, 1998.

Anne Norton Miller,

Deputy Director, Office of Federal Activities.

[FR Doc. 98–13780 Filed 5–21–98; 8:45 am]

BILLING CODE 6560–50–U

ENVIRONMENTAL PROTECTION AGENCY

[FRL–6102–2]

Underground Injection Control Program; Hazardous Waste Injection Restrictions; Petition for Exemption—Class I Hazardous Waste Injection; Great Lakes Chemical Corporation

AGENCY: Environmental Protection Agency (EPA).

ACTION: Notice of final decision on injection well no migration petition.

SUMMARY: Notice is hereby given that an exemption to the land disposal restrictions under the 1984 Hazardous and Solid Waste Amendments to the Resource Conservation and Recovery Act has been granted to Great Lakes Chemical Corporation (GLCC), for two Class I injection wells located at El Dorado, Arkansas. As required by 40 CFR part 148, the company has adequately demonstrated to the satisfaction of the Environmental Protection Agency by petition and supporting documentation that, to a reasonable degree of certainty, there will be no migration of hazardous constituents from the injection zone for as long as the waste remains hazardous. This final decision allows the underground injection by GLCC, of the specific restricted hazardous wastes identified in the exemption, into two Class I hazardous waste injection wells (WDW–5 and WDW–6) at the El Dorado, Arkansas facility, until July 1, 2005, unless EPA moves to terminate the exemption under provisions of 40 CFR 148.24. As required by 40 CFR 148.22(b) and 124.10, a public notice was issued March 6, 1998. The public comment period closed on April 20, 1998. No comments were received. This decision constitutes final Agency action and there is no Administrative appeal.

DATES: This action is effective as of May 13, 1998.

ADDRESSES: Copies of the petition and all pertinent information relating thereto

are on file at the following location: Environmental Protection Agency, Region 6, Water Quality Protection Division, Source Water Protection Branch (6WQ–SG) 1445 Ross Avenue, Dallas, Texas 75202–2733.

FOR FURTHER INFORMATION CONTACT: Philip Dellinger, Chief Ground Water/ UIC Section, EPA—Region 6, telephone (214) 665–7165.

Oscar Ramirez, Jr.,

Acting Director, Water Quality Protection Division.

[FR Doc. 98–13784 Filed 5–21–98; 8:45 am]

BILLING CODE 6560–50–P

ENVIRONMENTAL PROTECTION AGENCY

[FRL–6101–8]

Water Conservation Plan Guidelines Subcommittee Conference Call

AGENCY: Environmental Protection Agency (EPA).

ACTION: Notice.

SUMMARY: On June 4, 1998, the Water Conservation Plan Guidelines Subcommittee of the Local Government Advisory Committee (LGAC) will hold a conference call. The Subcommittee will discuss public comments received on the draft Water Conservation Plan Guidelines and make changes they deem appropriate to their final recommendations for advice and guidance to the Agency on the water conservation plan guidelines for public water systems, including the section of the draft guidelines which provides information to States on implementation of the guidelines.

Section 1455 of the Safe Drinking Water Act, as amended, requires EPA to publish guidelines for water conservation plans for three size ranges of public water systems. States may require water systems to submit a water conservation plan consistent with EPA's guidelines as a condition of receiving a loan from a State Drinking Water Loan Fund. The Subcommittee conference call is open and all interested persons are invited to attend on a space-available basis. Members of the public interested in attending the Subcommittee conference call should call the Designated Federal Official to reserve space.

DATES: The Subcommittee conference call will be held from 1:00 p.m. to 3:00 p.m. on Thursday, June 4, 1998.

ADDRESSES: The conference call will be held at the U.S. Environmental Protection Agency, Washington Information Center, Conference Room 8 South, 401 M Street, SW, Washington, DC 20460. Requests for a summary of the call can be obtained by writing to John E. Flowers, U. S. Environmental Protection Agency, Office of Wastewater Management (Mail Code 4204), 401 M Street, SW, Washington, DC 20460.

FOR FURTHER INFORMATION CONTACT: The Designated Federal Official for this Subcommittee is John E. Flowers. He is the point of contact for information concerning any Subcommittee matters and can be reached by calling (202) 260–7288.

Dated: May 15, 1998.

Michael B. Cook,

Director, Office of Wastewater Management.

[FR Doc. 98–13787 Filed 5–21–98; 8:45 am]

BILLING CODE 6560–50–P

ENVIRONMENTAL PROTECTION AGENCY

[FRL–6101–6]

Meeting of the Local Government Advisory Committee

AGENCY: Environmental Protection Agency (EPA).

ACTION: Notice.

SUMMARY: This will be the first meeting of the Local Government Advisory Committee in 1998 and the first meeting since the appointment of 23 new members. The full Committee will spend time during the first day in orientation, but will also consider recommendations put forward by the Water Conservation Subcommittee and review and discuss the Community-Based Environmental Protection Framework, a draft Agency document. During the second day, the subcommittees will meet and develop their agendas and work plans.

From 11:30–11:45 p.m. on the 11th, the Committee will hear comments from the public. Each individual or organization wishing to address the Committee will be allowed three minutes. Please contact the Designated Federal Officer (DFO) at the number listed below to schedule agenda time. Time will be allotted on a first come, first serve basis.

This is an open meeting and all interested persons are invited to attend. Meeting minutes will be available after the meeting and can be obtained by written request from the DFO. Members of the public are requested to call the DFO at the number listed below if planning to attend so that arrangements can be made to comfortably accommodate attendees as much as possible. However, seating will be on a first come, first serve basis.

DATES: The meeting will begin at 8:30 a.m. on Thursday, June 11th and conclude at 4:00 p.m. on the 12th.

ADDRESSES: The meeting will be held in Chicago, Illinois at DePaul University, located at 333 South State Street, Suite 520.

Requests for Minutes and other information can be obtained by writing to 401 M Street, SW (1306), Washington, DC 20460.

FOR FURTHER INFORMATION CONTACT: The DFO for this Committee is Denise Zabinski Ney. She is the point of contact for information concerning any Committee matters and can be reached by calling (202) 260–0419.

Dated: May 18, 1998.

Denise Zabinski Ney,

Designated Federal Officer, Local Government Advisory Committee.

[FR Doc. 98–13785 Filed 5–21–98; 8:45 am]

BILLING CODE 6560–50–P

EXPORT-IMPORT BANK OF THE UNITED STATES

Notice of Open Special Meeting of the Sub-Saharan Africa Advisory Committee of the Export-Import Bank of the United States (Export-Import Bank)

SUMMARY: The Sub-Saharan Africa Advisory Committee was established by Public Law 105–121, November 26, 1997, to advise the Board of Directors on the development and implementaion of policies and programs designed to support the expansion of the Bank's financial commitments in Sub-Saharan Africa under the loan, guarantee and insurance programs of the Bank. Further, the committee shall make recommendations on how the Bank can facilitate greater support by U.S. commercial banks for trade with Sub-Saharan Africa.

Time and place: Tuesday, June 9, 1998, at 10:00 a.m. to 12:00 noon. The meeting will be held at the Export-Import Bank in room 1143, 811 Vermont Avenue, NW, Washington, D.C. 20571.

Agenda: The meeting will include a discussion of the development and implementation of policies and programs designed to support the expansion of Ex-Im Bank's financial commitments in Sub-Saharan Africa. The discussion will focus on the innovative financial structures necessary to meet the challenges in risk-taking posed for Ex-Im in Sub-Saharan Africa and insights in marketing in the region.

Public participation: The meeting will be open to public participation, and the last 10 minutes will be set aside for oral questions or comments. Members of the public may also file written statement(s) before or after the meeting. If any person wishes auxiliary aids (such as a sign language interpreter) or other special accommodations, please contact, prior to June 2, 1998, Megan Becher, Room 1210, Vermont Avenue, NW, Washington, DC 20571, Voice: (202) 565–3507 or TDD (202) 565–3377.

FOR FURTHER INFORMATION CONTACT: Megan Becher, Room 1210, 811 Vermont Ave., NW, Washington, DC 20571, (202) 565–3507.

Kenneth Hansen,

General Counsel.

[FR Doc. 98–13777 Filed 5–21–98; 8:45 am]

BILLING CODE 6690–01–M

FEDERAL EMERGENCY MANAGEMENT AGENCY

[FEMA–1209–DR]

Georgia; Amendment to Notice of a Major Disaster Declaration

AGENCY: Federal Emergency Management Agency (FEMA).

ACTION: Notice.

SUMMARY: This notice amends the notice of a major disaster for the State of Georgia (FEMA–1209–DR), dated March 11, 1998, and related determinations.

EFFECTIVE DATE: May 11, 1998.

FOR FURTHER INFORMATION CONTACT: Madge Dale, Response and Recovery Directorate, Federal Emergency Management Agency, Washington, DC 20472, (202) 646–3260.

SUPPLEMENTARY INFORMATION: Notice is hereby given that the incident period for this disaster is closed effective May 11, 1998.

(The following Catalog of Federal Domestic Assistance Numbers (CFDA) are to be used for reporting and drawing funds: 83.537, Community Disaster Loans; 83.538, Cora Brown Fund Program; 83.539, Crisis Counseling; 83.540, Disaster Legal Services Program; 83.541, Disaster Unemployment Assistance (DUA); 83.542, Fire Suppression Assistance; 83.543, Individual and Family Grant (IFG) Program; 83.544, Public Assistance Grants; 83.545, Disaster Housing Program; 83.548, Hazard Mitigation Grant Program)

Lacy E. Suiter,

Executive Associate Director, Response and Recovery Directorate.

[FR Doc. 98–13758 Filed 5–21–98; 8:45 am]

BILLING CODE 6718–02–P

FEDERAL EMERGENCY MANAGEMENT AGENCY

[FEMA–1209–DR]

Georgia; Amendment to Notice of a Major Disaster Declaration

AGENCY: Federal Emergency Management Agency (FEMA).

ACTION: Notice.

SUMMARY: This notice amends the notice of a major disaster for the State of Georgia, (FEMA–1209–DR), dated March 11, 1998, and related determinations.

EFFECTIVE DATE: May 11, 1998.

FOR FURTHER INFORMATION CONTACT: Madge Dale, Response and Recovery Directorate, Federal Emergency Management Agency, Washington, DC 20472, (202) 646–3260.

SUPPLEMENTARY INFORMATION: The notice of a major disaster for the State of Georgia, is hereby amended to include the following areas among those areas determined to have been adversely affected by the catastrophe declared a major disaster by the President in his declaration of March 11, 1998:

Floyd and Towns Counties for Individual Assistance.

(The following Catalog of Federal Domestic Assistance Numbers (CFDA) are to be used for reporting and drawing funds: 83.537, Community Disaster Loans; 83.538, Dora Brown Fund Program; 83.539, Crisis Counseling; 83.540, Disaster Legal Services Program; 83.541, Disaster Unemployment Assistance (DUA); 83.542, Fire Suppression Assistance; 83.543, Individual and Family Grant (IFG) Program; 83.544, Public Assistance Grants; 83.545, Disaster Housing Program; 83.548, Hazard Mitigation Grant Program.)

Laurence W. Zensinger,

Division Director, Response and Recovery Directorate.

[FR Doc. 98–13759 Filed 5–21–98; 8:45 am]

BILLING CODE 6718–02–M

FEDERAL EMERGENCY MANAGEMENT AGENCY

[FEMA–1216–DR]

Kentucky; Amendment #2 to Notice of a Major Disaster Declaration

AGENCY: Federal Emergency Management Agency (FEMA).

ACTION: Notice.

SUMMARY: This notice amends the notice of a major disaster for the State of Kentucky, (FEMA–1216–DR), dated April 29, 1998, and related determinations.

EFFECTIVE DATE: May 13, 1998.

FOR FURTHER INFORMATION CONTACT: Madge Dale, Response and Recovery Directorate, Federal Emergency Management Agency, Washington, DC 20472, (202) 646–3260.

SUPPLEMENTARY INFORMATION: The notice of a major disaster for the State of Kentucky, is hereby amended to include following areas among those determined to have been adversely affected by the catastrophe declared a major disaster by the President in his declaration of April 29, 1998:

The counties of Breathitt, Johnson, Lee, Letcher, and Magoffin for Public Assistance.

The county of Pike for Individual Assistance.

(The following Catalog of Federal Domestic Assistance Numbers (CFDA) are to be used for reporting and drawing funds: 83.537, Community Disaster Loans; 83.538, Cora Brown Fund Program; 83.539, Crisis Counseling; 83.540, Disaster Legal Services Program; 83.541, Disaster Unemployment Assistance (DUA); 83.542, Fire Suppression Assistance; 83.543, Individual and Family Grant (IFG) Program; 83.544, Public Assistance Grants; 83.545, Disaster Housing Program; 83.548, Hazard Mitigation Grant Program)

Dennis H. Kwiatkowski,

Deputy Associate Director, Response and Recovery Directorate.

[FR Doc. 98–13761 Filed 5–21–98; 8:45 am]

BILLING CODE 6718–02–P

FEDERAL EMERGENCY MANAGEMENT AGENCY

[FEMA–1215–DR]

Tennessee; Amendment No. 7 to Notice of a Major Disaster Declaration

AGENCY: Federal Emergency Management Agency (FEMA).

ACTION: Notice.

SUMMARY: This notice amends the notice of a major disaster for the State of Tennessee, (FEMA–1215–DR), dated April 20, 1998, and related determinations.

EFFECTIVE DATE: May 12, 1998.

FOR FURTHER INFORMATION CONTACT: Madge Dale, Response and Recovery Directorate, Federal Emergency Management Agency, Washington, DC 20472, (202) 646–3260.

SUPPLEMENTARY INFORMATION: The notice of a major disaster for the State of Tennessee, is hereby amended to include the following areas among those areas determined to have been adversely affected by the catastrophe declared a major disaster by the President in his declaration of April 20, 1998:

Madison County for Individual Assistance.

(The following Catalog of Federal Domestic Assistance Numbers (CFDA) are to be used for reporting and drawing funds: 83.537, Community Disaster Loans; 83.538, Cora Brown Fund Program; 83.539, Crisis Counseling; 83.540, Disaster Legal Services Program; 83.541, Disaster Unemployment Assistance (DUA); 83.542, Fire Suppression Assistance; 83.543, Individual and Family Grant (IFG) Program; 83.544, Public Assistance Grants; 83.545, Disaster Housing Program; 83.548, Hazard Mitigation Grant Program)

Lacy E. Suiter,

Executive Associate Director, Response and Recovery Directorate.

[FR Doc. 98–13760 Filed 5–21–98; 8:45 am]

BILLING CODE 6718–02–P

FEDERAL MARITIME COMMISSION

Notice of Agreement(s) Filed

The Commission hereby gives notice of the filing of the following agreement(s) under the Shipping Act of 1984.

Interested parties can review or obtain copies of agreements at the Washington, DC offices of the Commission, 800 North Capitol Street, NW, Room 962. Interested parties may submit comments on an agreement to the Secretary, Federal Maritime Commission, Washington, DC 20573, within 10 days of the date this notice appears in the **Federal Register**.

Agreement No.: 232–011539–002

Title: CMN/Ivaran/TMM Space Charter and Sailing Agreement

Parties:

Compania Maritima Nacional (d/b/a Grupo, Libra) (''CMN''), A/S Ivaran Rederi, Transportacion Maritima Mexicana, S.A. de C.V.

Synopsis: The proposed amendment reflects a change in the ownership of party A/S Ivaran Rederi and notes a change in their corporate name to ''Ivaran Lines Limited.'' It also reflects the addition of a d/b/a/ name for Agreement party CMN. The parties have requested a shortened review period.

Agreement No.: 224–201053

Title: Alabama State Docks Department/ T&S Services, Inc., Terminal Agreement

Parties:

Alabama State Docks Department
T&S Services, Inc. (''T&S'')

Synopsis: The Agreement permits T&S to perform cargo and freight handling services at the Port of Mobile. The Agreement will terminate on December 31, 2002.

Dated: May 18, 1998.

By Order of the Federal Maritime Commission.

Joseph C. Polking,

Secretary.

[FR Doc. 98–13668 Filed 5–21–98; 8:45 am]

BILLING CODE 6730–01–M

FEDERAL RESERVE SYSTEM

Change in Bank Control Notices; Acquisitions of Shares of Banks or Bank Holding Companies

The notificants listed below have applied under the Change in Bank Control Act (12 U.S.C. 1817(j)) and § 225.41 of the Board's Regulation Y (12 CFR 225.41) to acquire a bank or bank holding company. The factors that are considered in acting on the notices are set forth in paragraph 7 of the Act (12 U.S.C. 1817(j)(7)).

The notices are available for immediate inspection at the Federal Reserve Bank indicated. The notices also will be available for inspection at the offices of the Board of Governors. Interested persons may express their views in writing to the Reserve Bank indicated for that notice or to the offices of the Board of Governors. Comments must be received not later than June 9, 1998.

A. Federal Reserve Bank of Chicago (Philip Jackson, Applications Officer) 230 South LaSalle Street, Chicago, Illinois 60690-1413:

1. John Douglas Dreier, Sparta, Wisconsin; to acquire additional voting shares of Community Bancorp, Inc., Norwalk, Wisconsin, and thereby indirectly acquire additional voting shares of Community State Bank, Norwalk, Wisconsin.

Board of Governors of the Federal Reserve System, May 19, 1998.

Jennifer J. Johnson,

Deputy Secretary of the Board.

[FR Doc. 98–13789 Filed 5–21–98; 8:45 am]

BILLING CODE 6210–01–F

FEDERAL RESERVE SYSTEM

Formations of, Acquisitions by, and Mergers of Bank Holding Companies

The companies listed in this notice have applied to the Board for approval, pursuant to the Bank Holding Company Act of 1956 (12 U.S.C. 1841 *et seq.*) (BHC Act), Regulation Y (12 CFR Part 225), and all other applicable statutes and regulations to become a bank holding company and/or to acquire the assets or the ownership of, control of, or the power to vote shares of a bank or bank holding company and all of the banks and nonbanking companies owned by the bank holding company, including the companies listed below.

The applications listed below, as well as other related filings required by the Board, are available for immediate inspection at the Federal Reserve Bank indicated. The application also will be available for inspection at the offices of the Board of Governors. Interested persons may express their views in writing on the standards enumerated in the BHC Act (12 U.S.C. 1842(c)). If the proposal also involves the acquisition of a nonbanking company, the review also includes whether the acquisition of the nonbanking company complies with the standards in section 4 of the BHC Act. Unless otherwise noted, nonbanking activities will be conducted throughout the United States.

Unless otherwise noted, comments regarding each of these applications must be received at the Reserve Bank indicated or the offices of the Board of Governors not later than June 19, 1998.

A. Federal Reserve Bank of Richmond (A. Linwood Gill III, Assistant Vice President) 701 East Byrd Street, Richmond, Virginia 23261-4528:

1. NationsBank Corporation and NationsBank (DE) Corporation, both in Charlotte, North Carolina (collectively, NationsBank); to merge with BankAmerica Corporation, San Francisco, California (BankAmerica), and thereby acquire the following bank subsidiaries of BankAmerica: Bank of America National Trust and Savings Association, San Francisco, California; Bank of America Texas, National Association, Dallas, Texas; Bank of America National Association, Phoenix, Arizona; and Bank of America Community Development Bank, Walnut Creek, California. On consummation of the proposed transaction, NationsBank would be renamed BankAmerica Corporation. NationsBank may form one or more intermediate bank holding companies.

In connection with the proposed transaction, NationsBank has provided notice to acquire all of the nonbank subsidiaries of BankAmerica and to engage, directly or indirectly through such nonbank subsidiaries, in a variety of nonbanking activities that previously have been determined to be permissible for bank holding companies. NationsBank also would continue to control all of its existing bank and nonbank subsidiaries. The nonbanking companies that NationsBank proposes to acquire are listed in the notice filed with the Board and include Bank of America, FSB, Portland, Oregon; BA Futures, Incorporated, Chicago, Illinois; BankAmerica Insurance Group, Inc.,

San Diego, California; DFO Partnership, San Francisco, California; First Franklin Financial Corporation, San Jose, California; First Franklin Funding Corporation, San Jose, California; General Fidelity Life Insurance Company, San Diego, California; Security Pacific Capital Leasing Corporation, San Francisco, California; and Security Pacific Housing Services, Inc., San Diego, California. The nonbanking activities of the companies to be acquired also are listed in the notice and include extending credit and servicing loans, pursuant to 12 CFR 225.28(b)(1); leasing personal and real property, pursuant to 12 CFR 225.28(b)(3); operating a savings association through Bank of America, FSB, Portland, Oregon, pursuant to 12 CFR 225.28(b)(4)(ii); providing financial and investment advisory services, pursuant to 12 CFR 225.28(b)(6); providing securities brokerage, riskless principal, private placement, futures commission merchant, and other agency transactional services, pursuant to 12 CFR 225.28(b)(7); underwriting and dealing in certain government obligations and money market instruments that state member banks may underwrite or deal in, pursuant to 12 CFR 225.28(b)(8)(i); acting as principal, agent, or broker in connection with the sale of credit-related insurance, pursuant to 12 CFR 225.28(b)(11)(i); engaging in community development activities, pursuant to 12 CFR 225.28(b)(12); providing data processing and data transmission services, pursuant to 12 CFR 225.28(b)(14); and engaging in all activities that BankAmerica currently is authorized by Board Order to conduct. As part of the proposed transaction, NationsBank proposes to engage through BancAmerica Robertson Stephens, San Francisco, California, in underwriting and dealing in all types of debt and equity securities (other than interests in open-end investment companies) to a limited extent in accordance with previous Board decisions. In addition, NationsBank proposes to engage, directly or indirectly through its subsidiaries, in certain other activities that the Board previously has approved by Order, including providing administrative services to open-end and closed-end investment companies.

In connection with the proposed transaction, NationsBank also has applied to acquire an option to purchase up to 19.9 percent of the outstanding shares of BankAmerica's common stock. BankAmerica also has applied to acquire an option to purchase up to 19.9 percent of the outstanding shares of NationsBank Corporation's common stock. These options would expire upon consummation of the merger. Comments regarding this application must be received not later than June 24, 1998.

B. Federal Reserve Bank of Chicago (Philip Jackson, Applications Officer) 230 South LaSalle Street, Chicago, Illinois 60690-1413:

1. Associated Banc-Corp, Green Bay, Wisconsin; to merge with Citizens Bankshares, Inc., Shawano, Wisconsin, and thereby indirectly acquire Citizens Bank, National Association, Shawano, Wisconsin.

In connection with this application, Applicant also has applied to acquire Wisconsin Finance Corporation, Shawano, Wisconsin, and thereby indirectly acquire Citizens Financial Services, Inc., Shawano, Wisconsin, and thereby engage in extending credit and servicing loans and acting as principal, agent, or broker for credit related insurance, pursuant to §§ 225.28(b)(1) and 225.28(b)(11)(ii) of the Board's Regulation Y.

2. West Burlington Bancorporation, Inc., West Burlington, Iowa; to become a bank holding company by acquiring 100 percent of the voting shares of West Burlington Bank, West Burlington, Iowa.

C. Federal Reserve Bank of Minneapolis (Karen L. Grandstrand, Vice President) 90 Hennepin Avenue, P.O. Box 291, Minneapolis, Minnesota 55480-0291:

1. M.I.F. Limited, Chisholm, Minnesota; to become a bank holding company by acquiring 100 percent of the voting shares of Chisholm Bancshares, Inc., Chisholm, Minnesota, and thereby indirectly acquire First National Bank, Chisholm, Minnesota.

2. Norwest Corporation, Minneapolis, Minnesota; to acquire 100 percent of the voting shares of First Bancshares, of Valley City, Inc., Valley City, North Dakota, and thereby indirectly acquire First State Bank of Casselton, Casselton, North Dakota; Litchville State Bank, Litchville, North Dakota; and First National Bank of Valley City, Valley City, North Dakota.

In connection with this application, Applicant also has applied to acquire Peoples Insurance Agency, Inc., Valley City, North Dakota, and thereby engage in general insurance agency activities, pursuant to § 225.28(b)(1)(vii) of the Board's Regulation Y.

3. Norwest Corporation, Minneapolis, Minnesota; to acquire 100 percent of the voting shares of Little Mountain Bancshares, Inc., Monticello, Minnesota, and thereby indirectly acquire First National Bank of Monticello, Monticello, Minnesota.

In connection with this application, Applicant proposes to transfer the mortgage origination and servicing business of the First National Bank of Monticello to its wholly owned subsidiary, Norwest Mortgage, Inc., Des Moines, Iowa. Norwest Mortgage Inc., proposes to engage in these activities, pursuant to § 225.28(b)(1) of the Board's Regulation Y.

D. Federal Reserve Bank of San Francisco (Maria Villanueva, Manager of Analytical Support, Consumer Regulation Group) 101 Market Street, San Francisco, California 94105-1579:

1. UCBH Holdings, Inc., San Francisco, California; to become a bank holding company by acquiring 100 percent of the voting shares of United Commercial Bank, F.S.B., San Francisco, California. United Commercial Bank, F.S.B., will convert to a bank charter.

Board of Governors of the Federal Reserve System, May 19, 1998.

Jennifer J. Johnson,

Deputy Secretary of the Board.

[FR Doc. 98–13790 Filed 5–21–98; 8:45 am]

BILLING CODE 6210–01–F

FEDERAL RESERVE SYSTEM

Notice of Proposals to Engage in Permissible Nonbanking Activities or to Acquire Companies that are Engaged in Permissible Nonbanking Activities

The companies listed in this notice have given notice under section 4 of the Bank Holding Company Act (12 U.S.C. 1843) (BHC Act) and Regulation Y, (12 CFR Part 225) to engage *de novo*, or to acquire or control voting securities or assets of a company, including the companies listed below, that engages either directly or through a subsidiary or other company, in a nonbanking activity that is listed in § 225.28 of Regulation Y (12 CFR 225.28) or that the Board has determined by Order to be closely related to banking and permissible for bank holding companies. Unless otherwise noted, these activities will be conducted throughout the United States.

Each notice is available for inspection at the Federal Reserve Bank indicated. The notice also will be available for inspection at the offices of the Board of Governors. Interested persons may express their views in writing on the question whether the proposal complies with the standards of section 4 of the BHC Act.

Unless otherwise noted, comments regarding the applications must be received at the Reserve Bank indicated

or the offices of the Board of Governors not later than June 9, 1998.

A. Federal Reserve Bank of Philadelphia (Michael E. Collins, Senior Vice President) 100 North 6th Street, Philadelphia, Pennsylvania 19105-1521:

1. Commerce Bancorp, Cherry Hill, Pennsylvania; to acquire Commerce Capital, Philadelphia, Pennsylvania, and thereby engage in Tier II securities underwriting and dealing and related activites, including bonds issued by not-for-profit entities that qualify under Section 501(c)(3) of the Internal Revenue Code for a tax exempt status; and bonds issued by private entities that qualify under Section 142(d) of the Internal Revenue Code for a partially tax exempt status (subject to only to the alternative minimum tax). *See* Citicorp, 75 Fed. Res. Bull., 751 (1989) & 83 Fed. Res. Bull. 510 (1997).

B. Federal Reserve Bank of Chicago (Philip Jackson, Applications Officer) 230 South LaSalle Street, Chicago, Illinois 60690-1413:

1. CITBA Financial Corporation, Mooresville, Indiana; to acquire Independent Bankers Life Insurance Company of Indiana, Phoenix, Arizona, a reinsurance subsidiary, and thereby indirectly engage in underwriting credit life, accident and health insurance directly related to extensions of credit by the banks and bank holding companies owning stock in the insurance agency, pursuant to § 225.28(b)(11)(i) of the Board's Regulation Y.

Board of Governors of the Federal Reserve System, May 19, 1998.

Jennifer J. Johnson,

Deputy Secretary of the Board.

[FR Doc. 98–13788 Filed 5–21–98; 8:45 am]

BILLING CODE 6210–01–F

FEDERAL RESERVE SYSTEM

Sunshine Act Meeting

AGENCY HOLDING THE MEETING: Board of Governors of the Federal Reserve System.

TIME AND DATE: 10:00 a.m., Wednesday, May 27, 1998.

PLACE: Marriner S. Eccles Federal Reserve Board Building, 20th and C Streets, NW., Washington, DC 20551.

STATUS: Closed.

MATTERS TO BE CONSIDERED:

1. Personnel actions (appointments, promotions, assignments, reassignments, and salary actions) involving individual Federal Reserve System employees.

2. Any matters carried forward from a previously announced meeting.

CONTACT PERSON FOR MORE INFORMATION: Joseph R. Coyne, Assistant to the Board; 202–452–3204.

SUPPLEMENTARY INFORMATION: You may call 202–452–3206 beginning at approximately 5 p.m. two business days before the meeting for a recorded announcement of bank and bank holding company applications scheduled for the meeting; or you may contact the Board's Web site at http://www.bog.frb.fed.us for an electronic announcement that not only lists applications, but also indicates procedural and other information about the meeting.

DATED: May 20, 1998.

Jennifer J. Johnson,

Deputy Secretary of the Board.

[FR Doc. 98–13862 Filed 5–20–98; 12:55 pm]

BILLING CODE 6210–01–P

DEPARTMENT OF HEALTH AND HUMAN SERVICES

Food and Drug Administration

[Docket No. 98P–0160]

Determination That Cimetidine 100 mg Tablets Were Not Withdrawn From Sale for Reasons of Safety or Effectiveness

AGENCY: Food and Drug Administration, HHS.

ACTION: Notice.

SUMMARY: The Food and Drug Administration (FDA) has determined that cimetidine 100 milligram (mg) tablets were not withdrawn from sale for reasons of safety or effectiveness. This determination will allow FDA to approve abbreviated new drug applications (ANDA's) for drugs that refer to cimetidine 100 mg tablets.

FOR FURTHER INFORMATION CONTACT: Virginia G. Beakes, Center for Drug Evaluation and Research (HFD–7), Food and Drug Administration, 5600 Fishers Lane, Rockville, MD 20857, 301–594–2041.

SUPPLEMENTARY INFORMATION: In 1984, Congress enacted the Drug Price Competition and Patent Term Restoration Act of 1984 (Pub. L. 98–417)(the 1984 amendments), which authorized the approval of duplicate versions of drug products approved under an ANDA procedure. ANDA sponsors must, with certain exceptions, show that the drug for which they are seeking approval contains the same active ingredient in the same strength and dosage form as the ''listed drug,'' which is a version of the drug that was previously approved under a new drug application (NDA). Sponsors of ANDA's do not have to repeat the extensive clinical testing otherwise necessary to gain approval of an NDA. The only clinical data required in an ANDA are data to show that the drug that is the subject of the ANDA is bioequivalent to the listed drug.

The 1984 amendments included what is now section 505(j)(6) of the Federal Food, Drug, and Cosmetic Act (21 U.S.C. 355(j)(6)), which requires FDA to publish a list of all approved drugs. FDA publishes this list as part of the ''Approved Drug Products with Therapeutic Equivalence Evaluations,'' which is generally known as the ''Orange Book.'' Under FDA's regulations, drugs are withdrawn from the list if the agency withdraws or suspends approval of the drug's NDA or ANDA for reasons of safety or effectiveness, or if FDA determines that the listed drug was withdrawn from sale for reasons of safety or effectiveness (21 CFR 314.162). Regulations also provide that the agency must make a determination as to whether a listed drug was withdrawn from sale for reasons of safety or effectiveness before an ANDA that refers to that listed drug may be approved (§ 314.161(a)(1) (21 CFR 314.161(a)(1))). FDA may not approve an ANDA that does not refer to a listed drug.

In citizen petitions dated March 9, 1998 (Docket No. 98P–0160/CP 1), and March 13, 1998 (Docket No. 98P–0160/CP 2), submitted in accordance with 21 CFR 314.122, Apotex Corp. and Novopharm Limited, respectively, requested that the agency determine whether cimetidine (Tagamet HB) 100 mg tablets were withdrawn from sale for reasons of safety or effectiveness. Cimetidine 100 mg tablets are the subject of approved NDA 20–238 held by SmithKline Beecham Consumer Healthcare LP (SmithKline Beecham). In 1997, SmithKline Beecham withdrew cimetidine 100 mg tablets from sale.

FDA has reviewed its records and, under § 314.161, has determined that cimetidine 100 mg tablets were not withdrawn from sale for reasons of safety or effectiveness. Accordingly, the agency will maintain cimetidine 100 mg tablets in the ''Discontinued Drug Product List'' section of the Orange Book. The ''Discontinued Drug Product List'' delineates, among other items, drug products that have been discontinued from marketing for reasons other than safety or effectiveness. ANDA's that refer to cimetidine 100 mg tablets may be approved by the agency.

Dated: May 14, 1998.

William K. Hubbard,

Associate Commissioner for Policy Coordination.

[FR Doc. 98–13650 Filed 5–21–98; 8:45 am]

BILLING CODE 4160–01–F

DEPARTMENT OF HEALTH AND HUMAN SERVICES

Food and Drug Administration

Medical Devices; Implementation of Third Party Review Under the Food and Drug Administration Modernization Act of 1997; Emergency Processing Request Under OMB Review

[Docket No. 98N–0331]

AGENCY: Food and Drug Administration, HHS.

ACTION: Notice.

SUMMARY: The Food and Drug Administration (FDA) is announcing a program under which persons may be accredited to review premarket notifications and recommend initial classification of certain medical devices. At the same time, FDA is announcing the termination of the Third Party Review Pilot Program. This notice announces the criteria to accredit or deny accreditation to persons (Accredited Persons) who request to conduct premarket notification reviews consistent with provisions of the FDA Modernization Act of 1997 (FDAMA). FDA is also announcing that this proposed collection of information has been submitted to the Office of Management and Budget (OMB) for emergency processing under the Paperwork Reduction Act of 1995 (the PRA). FDA is requesting OMB approval within 45 days of receipt of this submission. FDA is taking this action to implement section 210 of FDAMA. The availability of guidance detailing the review of submissions, training for third party reviewers, and basic document processing by FDA is announced elsewhere in this issue of the **Federal Register**.

DATES: Submit written comments on the collection of information by June 22, 1998. FDA will begin accepting applications for accreditation of Accredited Persons on July 20, 1998, and intends to make a list of Accredited Persons available on or about September 23, 1998. Beginning November 21, 1998, the agency will accept reviews and recommendations from Accredited Persons. On that same date, FDA plans to terminate the Third Party Review Pilot Program that began on August 1, 1996. FDA is currently planning to provide periodic training sessions for Accredited Persons, with the first such session scheduled for October 14-16, 1998.

ADDRESSES: Submit written comments on the collection of information to the Office of Information and Regulatory Affairs, OMB, New Executive Office Bldg., 725 17th St. NW, rm. 10235, Washington, DC 20503, Attn: Desk Officer for FDA. All comments should be identified with the docket number found in brackets in the heading of this document.

FOR FURTHER INFORMATION CONTACT: John F. Stigi, Division of Small Manufacturers Assistance (HFZ–220), Center for Devices and Radiological Health, Food and Drug Administration, 1350 Piccard Dr., Rockville, MD 20850, 301–443–6597, FAX 301–443–8818.

SUPPLEMENTARY INFORMATION:

I. Background

A. Third Party Review Pilot Program

In the **Federal Register** of April 3, 1996 (61 FR 14789), FDA announced that it would begin a 2-year voluntary pilot program to test the feasibility of using third party reviewers to improve the efficiency of the agency's review of 510(k)'s for selected low-and-moderate risk medical devices. FDA had previously solicited public comments on its plans for the pilot program in a notice issued in the **Federal Register** of June 1, 1995 (60 FR 28618), and at a public workshop held June 19, 1995. The comments received by the agency were addressed in the **Federal Register** notice (61 FR 14789).

The program announced in the April 3, 1996, notice provided for third party review for 251 types of devices that were included in the pilot program. These included all class I devices that were not exempt from 510(k) at that time (221 devices), and 30 class II devices, 24 of which were to be phased into the program over time.

Under the pilot program, persons required to submit 510(k)'s for the eligible devices were permitted to contract with an FDA Recognized Third Party and submit a 510(k) directly to the third party for review. Persons who did not wish to participate in the pilot continued to submit 510(k)'s directly to FDA. The third party applied FDA's 510(k) review criteria and submitted its documented review and recommendation on the substantial equivalence of the device to FDA. FDA then checked the review and issued a decision letter. FDA established a 30-day performance goal for its issuance of final decisions based on third party reviews.

The purpose of the pilot program was to: (1) Provide manufacturers of eligible devices with an alternative review process that could yield more rapid marketing clearance decisions, and (2) enable FDA to target its scientific review resources at higher-risk devices while maintaining confidence in the review by third parties of low-to-moderate risk devices. The pilot program was intended to determine the feasibility of these outcomes.

The agency received applications for recognition as third party reviewers from 37 prospective third parties. These applications were reviewed by a Third Party Recognition Board established by FDA. On July 11, 1996, FDA made publicly available a list of seven Recognized Third Parties, and immediately began a training program for third party review.

The pilot program began August 1, 1996, as scheduled. During the first 18 months of the pilot program, FDA received 22 510(k)'s that were reviewed by Recognized Third Parties. In contrast, during the same period, FDA received more than 1,300 510(k)'s for third party-eligible devices that were not reviewed by third parties.

B. FDA Modernization Act of 1997

The President signed FDAMA into law on November 21, 1997. Section 210 of FDAMA codifies and expands the ongoing Third Party Review Pilot Program by establishing a new section 523 of Federal Food, Drug, and Cosmetic Act (the act) (21 U.S.C. 360m), directing FDA to accredit persons in the private sector to conduct the initial review of 510(k)'s for selected low-to-moderate risk devices. This section specifies that an Accredited Person may not review class III devices or class II devices that are permanently implantable, life-supporting, life-sustaining, or for which clinical data are required. This section also sets limits on the number of class II devices requiring clinical data that may be ineligible for Accredited Person review.

II. FDAMA Third Party Review Program

Under the provisions of FDAMA, FDA is establishing the criteria it will use to determine whether it will accredit or deny accreditation of persons for the purpose of reviewing reports submitted under section 510(k) of the act (21 U.S.C. 360(k)) and making recommendations to FDA regarding the initial classification of devices under section 513(f)(1) of the act (21 U.S.C. 360c(f)(1)). As intended by Congress,

this process is an expansion of FDA's Third Party Review Pilot Program. This expanded program is applicable to a greater number and variety of devices. To ensure accurate and timely review, Accredited Persons will be expected to consult review guidance or national and/or international standards recognized by FDA. FDA is making available on the CDRH home page on the World Wide Web a list of devices for which there are recognized standards or review guidance and which will be eligible for review by Accredited Persons. FDA will update the list regularly.

To be accredited by FDA, applicants must demonstrate that they have the appropriate qualifications and facilities to conduct competent 510(k) reviews and have instituted effective controls to prevent any conflict of interest or appearance of conflict of interest that might affect the review process.

In accordance with FDAMA, to be accredited by FDA an applicant must, at a minimum, have the following qualifications:

(1) An Accredited Person may not be a Federal Government employee;

(2) An Accredited Person shall be an independent organization not owned or controlled by a manufacturer, supplier, or vendor of devices and have no organizational, material, or financial affiliation with such a manufacturer, supplier, or vendor;

(3) An Accredited Person shall be a legally constituted entity permitted to conduct the activities for which it seeks accreditation;

(4) An Accredited Person shall not engage in the design, manufacture, promotion, or sale of devices;

(5) An Accredited Person shall operate in accordance with generally accepted professional and ethical business practices and agree in writing that, at a minimum, it will:

(a) Certify that reported information accurately reflects data reviewed;

(b) Limit work to that for which competence and capacity are available;

(c) Treat information received, records, reports, and recommendations as proprietary information;

(d) Promptly respond and attempt to resolve complaints regarding its activities for which it is accredited; and

(e) Protect against the use of any officer or employee of the Accredited Person who has a financial conflict of interest regarding the device, and annually make available to the public disclosures of the extent to which the Accredited Person, and the officers and employees of the Accredited Person, have maintained compliance with requirements relating to financial conflicts of interest.

In accordance with FDAMA, an Accredited Person also must, at a minimum, maintain records that support its initial and continuing qualifications to be an Accredited Person. These records include:

(1) Documenting the training qualifications of the Accredited Person and the employees of the Accredited Person;

(2) The procedures used by the Accredited Person for handling confidential information;

(3) The compensation arrangements made by the Accredited Person; and

(4) The procedures used by the Accredited Person to identify and avoid conflicts of interest.

In addition to the above minimum requirements for Accredited Persons, FDA is establishing the following:

1. Personnel Qualifications

FDA expects to consider several factors with respect to personnel qualifications when it considers accrediting applicants. These include:

(1) Whether the applicant's personnel have demonstrated knowledge of:

- The Federal Food, Drug, and Cosmetic Act (21 U.S.C., 301 *et seq.*);
- The Public Health Service Act (42 U.S.C., 201 *et seq.*); and
- The regulations implementing these statutes, particularly 21 CFR parts 800 through 1299.

(2) Whether the applicant:

- Has established, documented, and executed policies and procedures to ensure that 510(k)'s are reviewed by qualified personnel, and will maintain records on the relevant education, training, skills, and experience of all personnel who contribute to the technical review of a 510(k);
- Has clear written instructions for duties and responsibilities with respect to 510(k) reviews available to its personnel;
- Has employed personnel who, as a whole, are qualified in all of the scientific disciplines addressed by the 510(k)'s that the Accredited Person accepts for review;
- Has identified at least one individual who is responsible for providing supervision over 510(k) reviews and who has sufficient authority and competence to assess the quality and acceptability of these reviews; and
- Is prepared to conduct technically competent reviews at the time of requesting accreditation by FDA.

(3) For appropriate review of a particular class II device, FDA will expect specialized education or experience to assure a technically competent review. In addition, Accredited Persons will be expected to consult national and/or international standards recognized by FDA or review guidance.

2. Facilities

FDA expects to accredit persons that have the capability to interface with FDA's electronic data systems, including FDA home page, CDRH home page, and CDRH Facts-On-Demand. At a minimum, this would include a computer system with a modem and an independent facsimile machine. FDA will rely extensively on the use of FDA's electronic data systems for timely public dissemination of guidance documents to Accredited Persons.

3. Prevention of Conflicts of Interest

FDA expects Accredited Persons to be impartial and free from any commercial, financial, and other pressures that might present a conflict of interest or an appearance of conflict of interest. To that end, when deciding whether to accredit a person, FDA will consider whether the person has established, documented, and executed policies and procedures to prevent any individual or organizational conflict of interest, including conflicts of contractors or individual contract employees.

4. Training

Accredited Persons must certify in their application that they will have designated employees attend FDA training for Accredited Persons. FDA plans to provide such training on a periodic basis for persons newly accredited. FDA encourages applicants who wish to begin submitting reviews on November 21, 1998, to apply at least 60 days before the scheduled October 14 through 16, 1998 training session. FDA will not accept 510(k) reviews and recommendations from Accredited Persons that have failed to have at least one designated employee attend a training session for Accredited Persons.

C. Safeguards

The Third Party Review Program established by FDAMA includes safeguards to maintain a high level of quality in 510(k)'s reviewed by Accredited Persons and to minimize risk to public health. To ensure that persons accredited under section 523 of the act will continue to meet the standards of accreditation, the statute requires FDA to: (1) Make onsite visits on a periodic basis to each Accredited Person to audit the performance of such person, and (2) take such additional

measures as the agency determines to be appropriate.

In addition, the statute permits FDA to suspend or withdraw accreditation of any person accredited under section 523 of the act, after providing notice and an opportunity for an informal hearing, when such person is substantially not in compliance with the requirements of this section or poses a threat to public health or fails to act in a manner consistent with the purposes of this section.

The act also has been amended to establish a new prohibited act section to protect the integrity of the Accredited Person Program established by section 523 of the act. It is a prohibited act under new section 301(y)(1) of the act (21 U.S.C. 331(y)(1)) for an Accredited Person to:

(1) Submit a report that is false or misleading in any material respect;

(2) Disclose confidential information or trade secrets without the express written consent of the person who submitted such information or secrets to the Accredited Person; or

(3) Receive a bribe in any form or do a corrupt act associated with a responsibility delegated to the Accredited Person under the act.

FDA also is requiring applicants who wish to become an Accredited Person to establish policies designed to identify, prevent, and ensure reporting to FDA, of instances of forum shopping by submitters of 510(k)'s. Submitters of 510(k)'s who consult with more than one party in order to find the Accredited Person who is most likely to recommend clearance of the 510(k) will undermine the independence and integrity of the Accredited Person Review Program. FDA, therefore, expects Accredited Persons to ensure that the submitters of the 510(k)'s they are reviewing have not previously presented the submission to another Accredited Person.

It is not feasible to identify or state categorically all of the criteria for evaluating whether a submitter has forum shopped. However, if FDA determines that a submitter has obtained reviews of the same 510(k) from more than one Accredited Person, there will be a presumption of forum shopping and FDA may refuse to provide special processing of a submitter's 510(k) unless the submitter can explain to FDA's satisfaction why the circumstances do not indicate forum shopping.

III. Environmental Impact

The agency has determined under 21 CFR 25.30(k) that this action is of a type that does not individually or cumulatively have a significant effect on the human environment. Therefore, neither an environmental assessment nor an environmental impact statement is required.

IV. Paperwork Reduction Act of 1995

This voluntary third party review program contains information collection provisions which are subject to review by the Office of Management and Budget (OMB) under the Paperwork Reduction Act of 1995 (44 U.S.C. 3501–3520). FDA has submitted this proposed collection of information to OMB and has requested emergency processing under section 3507(j) of the Paperwork Reduction Act of 1995 and 5 CFR 1320.13. The information is essential to the agency's mission and is needed immediately to meet the statutory deadline for implementation of the voluntary third party review program as required by FDAMA. The use of normal clearance procedures would be likely to result in the prevention or disruption of this collection of information. The title, description, and respondent description of the information collection provisions are shown below with an estimate of the annual recordkeeping and periodic reporting burden. Included in the estimate is the time for reviewing instructions, gathering and maintaining the data needed, and completing and reviewing each collection of information.

With respect to the following collection of information, FDA invites comments on: (1) Whether the proposed collection of information is necessary for the proper performance of FDA's functions, including whether the information will have practical utility; (2) the accuracy of FDA's estimate of the burden of the proposed collection of information, including the validity of the methodology and assumptions used; (3) ways to enhance the quality, utility, and clarity of the information to be collected; and (4) ways to minimize the burden of the collection of information on respondents, including through the use of automated collection techniques, when appropriate, and other forms of information technology.

Title: Medical Devices; FDAMA Third-Party Review.

Description: Section 210 of FDAMA establishes a new section 523 of the act, directing FDA to accredit persons in the private sector to review certain premarket applications and notifications. As with the third party pilot program previously conducted by FDA, participation in this third party review program by accredited persons is entirely voluntary. A third party wishing to participate will submit a request for accreditation. Accredited third party reviewers will have the ability to review a manufacturer's 510(k) submission for selected devices. After reviewing a submission, the reviewer will forward a copy of the 510(k) submission, along with the reviewer's documented review and recommendation, to FDA. Third party reviewers should maintain records of their 510(k) reviews and a copy of the 510(k) for a reasonable period of time. This information collection will allow FDA to implement the Accredited Person review program established by FDAMA and improve the efficiency of 510(k) review for low to moderate-risk devices.

Description of Respondents: Businesses or other for-profit organizations.

FDA estimates the burden of this collection of information as follows:

TABLE 1.—ESTIMATED ANNUAL REPORTING BURDEN[1]

Item	No. of Respondents	No. of Responses per Respondents	Total Annual Responses	Hours per Respondents	Total Hours
Request for accreditation	40	1	40	24	960
510(k) reviews conducted by accredited 3rd parties	35	4	140	40	5,600
Total hours					6,560

[1]There are no capital costs or operating and maintenance costs associated with this collection of information.

TABLE 2.—Estimated Annual Recordkeeping Burden[1]

Item	No. of Recordkeepers	Annual Frequency per Recordkeeping	Total Annual Records	Hours per Recordkeeper	Total Hours
510(k) reviews	35	4	140	60	8,400

[1]There are no capital costs or operating and maintenance costs associated with this collection of information.

The burdens are explained as follows:

1. Reporting

a. *Requests for accreditation:* Under the agency's third-party review pilot program, the agency received 37 applications for recognition as third party reviewers, of which the agency recognized 7. Under this expanded program, the agency anticipates that it will not see a significant increase in the number of applicants. Therefore, the agency is estimating that it will receive 40 applications. The agency anticipates that it will accredit 35 of the applicants to conduct third-party reviews.

b. *510(k) reviews conducted by accredited third-parties:* In 18 months under the Third Party Review Pilot Program, FDA received only 22 510(k)'s that requested and were eligible for review by third parties. Because the new program is not as limited in time, and is expanded in scope, the agency anticipates that the number of 510(k)'s submitted for third-party review will increase. The agency anticipates that it will receive approximately 140 third party review submissions annually, i.e., approximately 4 annual reviews per each of the estimated 35 accredited reviewers.

2. Recordkeeping

Third party reviewers are required to keep records of their review of each submission. The agency anticipates approximately 140 annual submissions of 510(k)'s for third party review.

Prior to the implementation of the program, FDA will publish in the **Federal Register** a notice of OMB's decision to approve, modify, or disapprove the information collection provisions. An agency may not conduct or sponsor, and a person is not required to respond to, a collection of information unless it displays a currently valid OMB control number.

Dated: May 19, 1998.

William B. Schultz,

Deputy Commissioner for Policy.

[FR Doc. 98–13799 Filed 5–20–98; 8:45 am]

BILLING CODE 4160–01–F

DEPARTMENT OF HEALTH AND HUMAN SERVICES

Food and Drug Administration

[Docket No. 97N–0438]

Agency Information Collection Activities; Announcement of OMB Approval

AGENCY: Food and Drug Administration, HHS.

ACTION: Notice.

SUMMARY: The Food and Drug Administration (FDA) is announcing that a collection of information entitled ''User Fee Cover Sheet'' has been approved by the Office of Management and Budget (OMB) under the Paperwork Reduction Act of 1995 (the PRA).

FOR FURTHER INFORMATION CONTACT: JonnaLynn P. Capezzuto, Office of Information Resources Management (HFA–250), Food and Drug Administration, 5600 Fishers Lane, Rockville, MD 20857, 301–827–4659.

SUPPLEMENTARY INFORMATION: In the **Federal Register** of February 13, 1998 (63 FR 7420), the agency announced that the proposed information collection had been submitted to OMB for review and clearance under section 3507 of the PRA (44 U.S.C. 3507). An agency may not conduct or sponsor, and a person is not required to respond to, a collection of information unless it displays a currently valid OMB control number. OMB has now approved the information collection and has assigned OMB control number 0910–0297. The approval expires on April 30, 2001.

Dated: May 14, 1998.

William K. Hubbard,

Associate Commissioner for Policy Coordination.

[FR Doc. 98–13648 Filed 5–21–98; 8:45 am]

BILLING CODE 4160–01–F

DEPARTMENT OF HEALTH AND HUMAN SERVICES

Food and Drug Administration

[Docket No. 97N–0327]

Agency Information Collection Activities; Announcement of OMB Approval

AGENCY: Food and Drug Administration, HHS.

ACTION: Notice.

SUMMARY: The Food and Drug Administration (FDA) is announcing that a collection of information entitled ''Petition for Administrative Stay of Action'' has been approved by the Office of Management and Budget (OMB) under the Paperwork Reduction Act of 1995 (the PRA).

FOR FURTHER INFORMATION CONTACT: JonnaLynn P. Capezzuto, Office of Information Resources Management (HFA–250), Food and Drug Administration, 5600 Fishers Lane, Rockville, MD 20857, 301–827–4659.

SUPPLEMENTARY INFORMATION: In the **Federal Register** of February 12, 1998 (63 FR 7173 and 7174), the agency announced that the proposed information collection had been submitted to OMB for review and clearance under section 3507 of the PRA (44 U.S.C. 3507). An agency may not conduct or sponsor, and a person is not required to respond to, a collection of information unless it displays a currently valid OMB control number. OMB has now approved the information collection and has assigned OMB control number 0910–0194. The approval expires on April 30, 2001.

Dated: May 14, 1998.

William K. Hubbard,

Associate Commissioner for Policy Coordination.

[FR Doc. 98–13649 Filed 5–21–98; 8:45 am]

BILLING CODE 4160–01–F

DEPARTMENT OF HEALTH AND HUMAN SERVICES

Food and Drug Administration

[Docket No. 98D–0298]

Guidance for Industry on General/Specific Intended Use; Draft; Availability

AGENCY: Food and Drug Administration, HHS.

ACTION: Notice.

SUMMARY: The Food and Drug Administration (FDA) is announcing the availability of the draft guidance entitled ''Guidance for Industry on General/Specific Intended Use.'' This draft guidance is not final or in effect at this time. The purpose of this draft guidance is to help medical device manufacturers understand the principles used by FDA to determine whether the addition of a specific indication for use to a medical device cleared for marketing with a general indication for use could trigger the need for a premarket approval application (PMA). The draft guidance is intended to help manufacturers answer the following questions: Under what circumstances is a device with a new, specific indication for use likely to be found to be substantially equivalent to a device legally marketed for a general indication for use? Conversely, when does a specific indication for use become a new intended use that requires submission of a PMA to establish the safety and effectiveness of the device?

DATES: Written comments concerning this draft guidance must be submitted by June 22, 1998.

ADDRESSES: Submit written requests for single copies on a 3.5'' diskette of the draft guidance entitled ''Guidance for Industry on General/Specific Intended Use'' to the Division of Small Manufacturers Assistance (HFZ–220), Center for Devices and Radiological Health, Food and Drug Administration, 1350 Piccard Dr., Rockville, MD 20850. Send two self-addressed adhesive labels to assist that office in processing your request, or fax your request to 301–443–8818. Submit written comments concerning this draft guidance to the Dockets Management Branch (HFA–305), Food and Drug Administration, 12420 Parklawn Dr., rm. 1–23, Rockville, MD 20857. Comments should be identified with the docket number found in brackets in the heading of this document. See the **SUPPLEMENTARY INFORMATION** section for electronic access to the draft guidance.

FOR FURTHER INFORMATION CONTACT: Daniel G. Schultz, Center for Devices and Radiological Health (HFZ–470), Food and Drug Administration, 9200 Corporate Blvd., Rockville, MD 20850, 301–594–5072.

SUPPLEMENTARY INFORMATION:

I. Background

Congress indicated that FDA should provide additional guidance on the approach that the agency takes when evaluating whether a new indication for use, which appears to fall within the scope of the intended use of a legally marketed predicate device, is a new intended use that would require a PMA. This guidance is issued in accordance with new section 513(i)(1)(F) of the Federal Food, Drug, and Cosmetic Act (21 U.S.C. 360c(i)(1)(F)), which was added by section 206 of the Food and Drug Administration Modernization Act of 1997 (Pub. L. 105–115).

II. Significance of Guidance

This draft guidance represents the agency's current thinking on general/specific intended use. It does not create or confer any rights for or on any person and does not operate to bind FDA or the public. An alternative approach may be used if such approach satisfies the applicable statute, regulations, or both.

The agency has adopted good guidance practices (GGP's), which set forth the agency's policies and procedures for the development, issuance, and use of guidance documents (62 FR 8961, February 27, 1997). This draft guidance is issued as a Level 1 guidance consistent with GGP's.

III. Electronic Access

In order to receive copies of the draft guidance entitled ''Guidance for Industry on General/Specific Intended Use'' via your fax machine, call the CDRH Facts-On-Demand (FOD) system at 800–899–0381 or 301–827–0111 from a touch-tone telephone. At the first voice prompt press 1 to access DSMA Facts, at the second voice prompt press 2, and then enter the document number 499 followed by the pound sign (#). Then follow the remaining voice prompts to complete your request.

Persons interested in obtaining a copy of the draft guidance may also do so using the World Wide Web (WWW). CDRH maintains an entry on the WWW for easy access to information including text, graphics, and files that may be downloaded to a personal computer with access to the Web. Updated on a regular basis, the CDRH home page includes the draft guidance entitled ''Guidance for Industry on General/Specific Intended Use,'' device safety alerts, **Federal Register** reprints, information on premarket submissions (including lists of approved applications and manufacturers' addresses), small manufacturers' assistance, information on video conferencing and electronic submissions, mammography matters, and other device-oriented information. The CDRH home page may be accessed at http://www.fda.gov/cdrh.

A text-only version of the CDRH Web site is also available from a computer or VT–100 compatible terminal by dialing 800–222–0185 (terminal settings are 8/1/N). Once the modem answers, press Enter several times and then select menu choice 1: FDA BULLETIN BOARD SERVICE. From there follow instructions for logging in, and at the BBS TOPICS PAGE, arrow down to the FDA home page (do not select the first CDRH entry). Then select Medical Devices and Radiological Health. From there select CENTER FOR DEVICES AND RADIOLOGICAL HEALTH for general information, or arrow down for specific topics.

IV. Comments

Interested persons may, on or before June 22, 1998, submit to the Dockets Management Branch (address above) written comments regarding this draft guidance. Two copies of any comments are to be submitted, except that individuals may submit one copy. Comments are to be identified with the docket number found in brackets in the heading of this document. The guidance document and received comments may be seen in the office above between 9 a.m. and 4 p.m., Monday through Friday.

Dated: May 12, 1998.

D.B. Burlington,

Director, Center for Devices and Radiological Health.

[FR Doc. 98–13798 Filed 5–21–98; 8:45 am]

BILLING CODE 4160–01–F

DEPARTMENT OF HEALTH AND HUMAN SERVICES

Food and Drug Administration

[Docket No. 98D–0312]

Draft Guidance for Staff, Industry, and Third Parties: Implementation of Third Party Programs Under the FDA Modernization Act of 1997; Availability

AGENCY: Food and Drug Administration, HHS.

ACTION: Notice.

SUMMARY: The Food and Drug Administration (FDA) is announcing the

availability of a draft guidance entitled, ''Guidance for Staff, Industry, and Third Parties: Implementation of Third Party Programs Under the FDA Modernization Act of 1997''. Elsewhere in this issue of the **Federal Register**, FDA has published criteria to accredit or deny accreditation to applicants who request to become Accredited Persons. To the extent this guidance discusses recommendations and procedures that have not been incorporated into the criteria established in the **Federal Register** notice, this guidance is not final nor is it in effect at this time. This guidance will assist those who are interested in participating in the Third Party Program, either as persons accredited to perform 510(k) reviews (Accredited Persons) or as applicants pursuing clearance of 510(k) submissions consistent with the FDA Modernization Act of 1997 (FDAMA), as well as FDA staff responsible for implementing the program.

DATES: Written comments concerning this guidance must be received by June 22, 1998.

ADDRESSES: Written comments concerning this guidance must be submitted to the Dockets Management Branch (HFA–305), Food and Drug Administration, 12420 Parklawn Dr., rm. 1–23, Rockville, MD 20857. Comments should be identified with the docket number found in brackets in the heading of this document. See the **SUPPLEMENTARY INFORMATION** section for electronic access to the draft guidance. If you do not have access to the World Wide Web (WWW), submit written requests for single copies of the guidance document entitled, ''Guidance for Staff, Industry, and Third Parties: Implementation of Third Party Programs Under the FDA Modernization Act of 1997'' on a 3.5'' disk, to the Division of Small Manufacturers Assistance (HFZ–220), Center for Devices and Radiological, Food and Drug Administration, 1350 Piccard Dr., Rockville, MD 20850. Send two self-addressed adhesive labels to assist that office in processing your request, or fax your request to 301–443–8818.

FOR FURTHER INFORMATION CONTACT: John F. Stigi, Division of Small Manufacturers Assistance (HFZ–220), Center for Devices and Radiological Health, Food and Drug Administration, 1350 Piccard Dr., Rockville, MD 20850, 301–443–6597 or FAX 301–443–8818.

SUPPLEMENTARY INFORMATION:

I. Background

On August 1, 1996, FDA established the Third Party Review Pilot Program, a voluntary pilot program, to assess the feasibility of using third party reviewers to improve the efficiency of the agency's review of 510(k)s for selected low-to-moderate risk devices. Under the pilot program, persons required to submit 510(k)s for the eligible devices were permitted to contract with an FDA Recognized Third Party and submit a 510(k) directly to the third party for review. Persons who did not wish to participate in the pilot continued to submit 510(k)s directly to FDA.

Under FDAMA, this pilot program has been codified and expanded and FDA is required to establish and publish criteria to accredit or deny accreditation to persons who request to perform third party reviews. Those criteria are published elsewhere in this issue of the **Federal Register** in accordance with section 210(b) of FDAMA. This guidance document contains additional information regarding applications for accreditation of third party reviewers, as well as additional information about the agency's plans for implementation of the third party review program. FDA will begin to accept applications from prospective accredited persons beginning July 20, 1998. FDA will review those applications in 60 days and approved Accredited Persons may begin to submit reviews of 510(k)s on November 21, 1998. Because Accredited Persons must participate in training prior to submitting recommendations, applicants who wish to attend the initial training that will be held October 14 through 16, 1998, should submit their applications at least 60 days in advance of that date.

II. Significance of Guidance

This guidance document represents the agency's current thinking on implementation of the third party review program. It does not create or confer any rights for or on any person and does not operate to bind FDA or the public. An alternative approach may be used if such approach satisfies the applicable statute, regulations, or both.

The agency has adopted Good Guidance Practices (GGP's), which set forth the agency's policies and procedures for the development, issuance, and use of guidance documents (62 FR 8961, February 27, 1997). This guidance document is issued as a draft Level 1 guidance consistent with GGP's.

III. Electronic Access

Persons interested in obtaining a copy of the guidance may also do so using the WWW. CDRH maintains an entry on the WWW for easy access to information, including text, graphics, and files that may be downloaded to a personal computer with access to the Web. Updated on a regular basis, the CDRH home page includes ''Guidance for Staff, Industry, and Third Parties: Implementation of Third Party Programs Under the FDA Modernization Act of 1997,'' device safety alerts, access to **Federal Register** reprints, information on premarket submissions (including lists of approved applications and manufacturers addresses), small manufacturers assistance, information on video conferencing and electronic submissions, mammography matters, and other device-oriented information. The CDRH home page may be accessed at http://www.fda.gov/cdrh.

A text-only version of the CDRH home page is also available from a computer or VT–100 compatible terminal by dialing 800–222–0185 (terminal settings are 8/1/N). Once the modem answers, press Enter several times and then select menu choice 1: FDA BULLETIN BOARD SERVICE. From there follow instructions for logging in, and at the BBS TOPICS PAGE, arrow down to the FDA home page (do not select the first CDRH entry). Then select Medical Devices and Radiological Health. From there select CENTER FOR DEVICES AND RADIOLOGICAL HEALTH for general information, or arrow down for specific topics.

IV. Comments

Interested persons may on or before June 22, 1998, submit to the Dockets Management Branch (address above) written comments regarding this draft guidance. Two copies must be submitted of any comments sent to the Dockets Management Branch, except that individuals may submit one copy. Comments are to be identified with the docket number found in brackets in the heading of this document. The guidance document and received comments may be seen in the Dockets Management Branch between 9 a.m. and 4 p.m., Monday through Friday.

Dated: May 19, 1998.

William B. Schultz,

Deputy Commissioner for Policy.

[FR Doc. 98–13800 Filed 5–20–98; 8:45 am]

BILLING CODE 4160–01–F

DEPARTMENT OF HEALTH AND HUMAN SERVICES

Health Care Financing Administration

[Document Identifier: HCFA–R–141]

Agency Information Collection Activities: Proposed Collection; Comment Request

In compliance with the requirement of section 3506(c)(2)(A) of the Paperwork Reduction Act of 1995, the Health Care Financing Administration (HCFA), Department of Health and Human Services, is publishing the following summary of proposed collections for public comment. Interested persons are invited to send comments regarding the burden estimate or any other aspect of this collection of information, including any of the following subjects: (1) The necessity and utility of the proposed information collection for the proper performance of the agency's functions; (2) the accuracy of the estimated burden; (3) ways to enhance the quality, utility, and clarity of the information to be collected; and (4) the use of automated collection techniques or other forms of information technology to minimize the information collection burden.

Type of Information Collection Request: Revision of a currently approved collection; *Title of Information Collection:* Information Collection Requirements Contained in the Medicaid Termination of Enrollment Regulation 42 CFR 434.27; *Form No.:* HCFA–R–141, OMB–0938–0572; *Use:* The termination of enrollment contract requirements, as referenced in 42 CFR 434.27 allow States, through contracts with Medicaid Managed Care Organizations (MCOs), to restrict disenrollment from an MCO up to a one year period. However, Medicaid beneficiaries are allowed to disenroll during the period for good cause. *Frequency:* On occasion; *Affected Public:* Business or other for-profit; *Number of Respondents:* 8,406,945; *Total Annual Responses:* 8,406,945; *Total Annual Hours:* 1.

To obtain copies of the supporting statement for the proposed paperwork collections referenced above, E-mail your request, including your address and phone number, to Paperwork@hcfa.gov, or call the Reports Clearance Office on (410) 786–1326. Written comments and recommendations for the proposed information collections must be mailed within 60 days of this notice directly to the HCFA Paperwork Clearance Officer designated at the following address: HCFA, Office of Information Services, Information Technology Investment Management Group, Division of HCFA Enterprise Standards, Attention: John Rudolph, Room C2–26–17, 7500 Security Boulevard, Baltimore, Maryland 21244–1850.

Dated: May 12, 1998.

John P. Burke III,

HCFA Reports Clearance Officer, Division of HCFA Enterprise Standards, Health Care Financing Administration.

[FR Doc. 98–13658 Filed 5–21–98; 8:45 am]

BILLING CODE 4120–03–P

DEPARTMENT OF HEALTH AND HUMAN SERVICES

Health Care Financing Administration

[Document Identifier: HCFA–18F5]

Agency information Collection Activities: Proposed Collection; Comment Request

In compliance with the requirement of section 3506(c)(2)(A) of the Paperwork Reduction Act of 1995, the Health Care Financing Administration (HCFA), Department of Health and Human Services, is publishing the following summary of proposed collections for public comment. Interested persons are invited to send comments regarding the burden estimate or any other aspect of this collection of information, including any of the following subjects: (1) The necessity and utility of the proposed information collection for the proper performance of the agency's functions; (2) the accuracy of the estimated burden; (3) ways to enhance the quality, utility, and clarity of the information to be collected; and (4) the use of automated collection techniques or other forms of information technology to minimize the information collection burden.

Type of Information Collection Request: Extension of a currently approved collection.; *Title of Information Collection:* Application for Hospital Insurance and Supporting Regulation 42CFR 406.7; *Form No.:* HCFA–18F5, OMB # 0938–0251; *Use:* The HCFA 18F5 is used to establish entitlement to hospital insurance and supplementary medical insurance for beneficiaries entitled under title XVII of the Social Security Act only. *Frequency:* One time submission; *Affected Public:* Individuals or Households, Business or other for-profit, Not-for-profit institutions, Farms, Federal Government, and State, Local or Tribal Government; *Number of Respondents:* 50,000; *Total Annual Responses:* 50,000; *Total Annual Hours:* 12,500.

To obtain copies of the supporting statement for the proposed paperwork collections referenced above, E-mail your request, including your address and phone number, to Paperwork@hcfa.gov, or call the Reports Clearance Office on (410) 786–1326. Written comments and recommendations for the proposed information collections must be mailed within 60 days of this notice directly to the HCFA Paperwork Clearance Officer designated at the following address: HCFA, Office of Information Services, Information Technology Investment Management Group, Division of HCFA Enterprise Standards Attention: John Rudolph Room C2–26–17 7500 Security Boulevard Baltimore, Maryland 21244–1850

Dated: May 14, 1998.

John P. Burke III,

HCFA Reports Clearance Officer, Division of HCFA Enterprise Standards, Health Care Financing Administration.

[FR Doc. 98–13676 Filed 5–21–98; 8:45 am]

BILLING CODE 4120–03–P

DEPARTMENT OF HEALTH AND HUMAN SERVICES

Health Care Financing Administration

[Document Identifier: HCFA–102/105]

Agency Information Collection Activities: Submission for OMB Review; Comment Request

AGENCY: Health Care Financing Administration.

In compliance with the requirement of section 3506(c)(2)(A) of the Paperwork Reduction Act of 1995, the Health Care Financing Administration (HCFA), Department of Health and Human Services, is publishing the following summary of proposed collections for public comment. Interested persons are invited to send comments regarding this burden estimate or any other aspect of this collection of information, including any of the following subjects: (1) The necessity and utility of the proposed information collection for the proper performance of the agency's functions; (2) the accuracy of the estimated burden; (3) ways to enhance the quality, utility, and clarity of the information to be collected; and (4) the use of automated collection techniques or other forms of information technology to minimize the information collection burden.

Type of Information Collection Request: Extension of a currently

approved collection; *Title of Information Collection:* CLIA Budget Workload Reports and Supporting Regulations in 42 CFR 493.1-.2001; *Form No.:* HCFA–102/105 (OMB# 0938–0599); *Use:* This information will be used by HCFA to determine the amount of Federal reimbursement for compliance surveys. In addition, the HCFA 102/105 is used for program evaluation, budget formulation and budget approval; *Frequency:* Quarterly and Annually; *Affected Public:* State, local or tribal government; *Number of Respondents:* 50; *Total Annual Responses:* 331; *Total Annual Hours:* 4,500.

To obtain copies of the supporting statement and any related forms for the proposed paperwork collections referenced above, access HCFA's Web Site address at http://www.hcfa.gov/regs/prdact95.htm, or E-mail your request, including your address, phone number, OMB number, and HCFA document identifier, to Paperwork@hcfa.gov, or call the Reports Clearance Office on (410) 786–1326. Written comments and recommendations for the proposed information collections must be mailed within 30 days of this notice directly to the OMB desk officer: OMB Human Resources and Housing Branch, Attention: Allison Eydt, New Executive Office Building, Room 10235, Washington, D.C. 20503.

Dated: May 15, 1998.

John P. Burke III,

HCFA Reports Clearance Officer, HCFA Office of Information Services, Information Technology Investment Management Group, Division of HCFA Enterprise Standards.

[FR Doc. 98–13673 Filed 5–21–98; 8:45 am]

BILLING CODE 4120–03–P

DEPARTMENT OF HEALTH AND HUMAN SERVICES

Health Care Financing Administration

[Document Identifier: HCFA–R–216]

Agency Information Collection Activities: Submission for OMB Review; Comment Request

AGENCY: Health Care Financing Administration.

In compliance with the requirement of section 3506(c)(2)(A) of the Paperwork Reduction Act of 1995, the Health Care Financing Administration (HCFA), Department of Health and Human Services, is publishing the following summary of proposed collections for public comment. Interested persons are invited to send comments regarding this burden estimate or any other aspect of this collection of information, including any of the following subjects: (1) The necessity and utility of the proposed information collection for the proper performance of the agency's functions; (2) the accuracy of the estimated burden; (3) ways to enhance the quality, utility, and clarity of the information to be collected; and (4) the use of automated collection techniques or other forms of information technology to minimize the information collection burden.

Type of Information Collection Request: Extension of a currently approved collection; *Title of Information Collection:* Procedures for Advisory Opinions Concerning Physician Referrals and Supporting Regulations in 42 CFR 411.370 through 411.389; *Form No.:* HCFA–R–216 (OMB# 0938–0714); *Use:* Section 4314 of Public Law 105–33, in establishing section 1877(g)(6) of the Act, requires the Department to provide advisory opinions to the public regarding whether a physician's referrals for certain designated health services are prohibited under the other provisions in section 1877 of the Act. These regulations provide the procedures under which members of the public may request advisory opinions from HCFA. Because all requests for advisory opinions are purely voluntary, respondents will only be required to provide information to us that is relevant to their individual requests; *Frequency:* On occasion; *Affected Public:* Not-for-profit institutions, Business or other for-profit, and Individuals and Households; *Number of Respondents:* 200; *Total Annual Responses:* 200; *Total Annual Hours:* 2,000.

To obtain copies of the supporting statement and any related forms for the proposed paperwork collections referenced above, access HCFA's Web Site address at http://www.hcfa.gov/regs/prdact95.htm, or E-mail your request, including your address, phone number, OMB number, and HCFA document identifier, to Paperwork@hcfa.gov, or call the Reports Clearance Office on (410) 786–1326. Written comments and recommendations for the proposed information collections must be mailed within 30 days of this notice directly to the OMB desk officer: OMB Human Resources and Housing Branch, Attention: Allison Eydt, New Executive Office Building, Room 10235, Washington, D.C. 20503.

Dated: May 14, 1998.

John P. Burke III,

HCFA Reports Clearance Officer, HCFA Office of Information Services, Information Technology Investment Management Group, Division of HCFA Enterprise Standards.

[FR Doc. 98–13674 Filed 5–21–98; 8:45 am]

BILLING CODE 4120–03–P

DEPARTMENT OF HEALTH AND HUMAN SERVICES

Health Care Financing Administration

[Document Identifier: HCFA–R–5]

Agency Information Collection Activities: Submission for OMB Review; Comment Request

In compliance with the requirement of section 3506(c)(2)(A) of the Paperwork Reduction Act of 1995, the Health Care Financing Administration (HCFA), Department of Health and Human Services, has submitted to the Office of Management and Budget (OMB) the following proposal for the collection of information. Interested persons are invited to send comments regarding the burden estimate or any other aspect of this collection of information, including any of the following subjects: (1) The necessity and utility of the proposed information collection for the proper performance of the agency's functions; (2) the accuracy of the estimated burden; (3) ways to enhance the quality, utility, and clarity of the information to be collected; and (4) the use of automated collection techniques or other forms of information technology to minimize the information collection burden.

Type of Information Collection Request: Reinstatement, without change of a previously approved collection for which approval has expired.; *Title of Information Collection:* Physician Certifications/Recertification in Skilled Nursing Facilities Manual Instructions and Supporting Regulations 42 CFR 424.20; *Form No.:* HCFA–R–5; *Use:* The Medicare program requires as a condition of participation for Medicare Part A payment for posthospital skilled nursing facility (SNF) services, that a physician must certify and periodically recertify that a beneficiary requires an SNF level of care. The physician certification requirement is intended to ensure that the beneficiary's need for services has been established and then reviewed and updated at appropriate intervals. *Frequency:* On occasion; *Affected Public:* Individuals or households, business or other for-profit, not -for-profit institutions, State, Local or Tribal Government; *Number of*

Respondents: 689,005; *Total Annual Responses:* 2,598,493; *Total Annual Hours:* 365,914.

To obtain copies of the supporting statement for the proposed paperwork collections referenced above, E-mail your request, including your address and phone number, to Paperwork@hcfa.gov, or call the Reports Clearance Office on (410) 786–1326. Written comments and recommendations for the proposed information collections must be mailed within 30 days of this notice directly to the OMB Desk Officer designated at the following address: OMB Human Resources and Housing Branch, Attention: Allison Eydt, New Executive Office Building, Room 10235, Washington, DC. 20503.

Dated: May 15, 1998.

John P. Burke III,

HCFA Reports Clearance Officer, HCFA, Office of Information Services, Information Technology Investment Management Group, Division of HCFA Enterprise Standards.

[FR Doc. 98–13680 Filed 5–21–98; 8:45 am]

BILLING CODE 4120–03–P

DEPARTMENT OF HEALTH AND HUMAN SERVICES

Health Care Financing Administration

Privacy Act of 1974; Report of New System

AGENCY: Health Care Financing Administration (HCFA), Department Health and Human Services (HHS).

ACTION: Notice of New System of Records.

SUMMARY: In accordance with the requirements of the Privacy Act of 1974, we are proposing to establish a new system of records, ''Long Term Care Minimum Data Set (LTC MDS),'' HHS/HCFA/CMSO System No. 09–70–1516. We have provided background information about the proposed system in the ''Supplementary Information'' section below. Although the Privacy Act requires only that the ''routine use'' portion of the system be published for comment, HCFA invites comments on all portions of this notice. See ''Effective Dates'' section for comment period.

EFFECTIVE DATES: HCFA filed a new system report with the Chair of the House Committee on Government Reform and Oversight, the Chair of the Senate Committee on Governmental Affairs, and the Administrator, Office of Information and Regulatory Affairs, Office of Management and Budget (OMB) on May 19, 1998. To ensure that all parties have adequate time in which to comment, the new system of records, including routine uses, will become effective 40 days after the publication of this notice or from the date submitted to OMB and the Congress, whichever is later, unless HCFA receives comments which require alterations to this notice.

ADDRESSES: The public should address comments to the HCFA Privacy Act Officer, Division of Freedom of Information and Privacy, Office of Information Services, C2–01–11, Baltimore, Maryland 21244–1850. Comments received will be available for review at this location, by appointment, Monday through Friday from 9 am.—3 pm., eastern time zone.

FOR FURTHER INFORMATION CONTACT: Helene Fredeking, Director, Division of Outcomes and Improvements, Center for Medicaid and State Operations, HCFA, 7500 Security Boulevard, S2–11–07, Baltimore, Maryland 21244–1850. The telephone number is (410) 786–7304.

SUPPLEMENTARY INFORMATION: Sections 1819(b)(3)(A) and 1919(b)(3)(A) of the Social Security Act require LTC facilities participating in the Medicare and Medicaid programs to conduct comprehensive, accurate, standardized, reproducible assessments of each resident's functional capacity. Sections 1819(f) and 1919(f) of the Social Security Act require the Secretary to specify an MDS of core elements and common definitions for use by the facilities, to establish guidelines for use of the data set, and to designate one or more assessment instruments which a state requires facilities to use.

A notice of proposed rulemaking (NPRM) was published in the **Federal Register**, Vol. 57, No. 249, page 61626 on December 28, 1992. A final rule was published, in the **Federal Register**, Vol. 62, No. 246, page 67174—67213, on December 23, 1997. The rule requires facilities certified to participate in Medicare and/or Medicaid to encode and transmit the information contained in the MDS to the state using a format that conforms to standard record layouts and data dictionaries. The state is subsequently required to transmit the data to HCFA using the same standard record layouts and data dictionaries.

This new system of records shall contain the assessment information (MDS records) for each individual residing in LTC facilities that are certified to participate in the Medicare and/or Medicaid programs (including private pay individuals). Each state's resident assessment instrument must contain the assessment instrument designated by HCFA, which includes the MDS and its common definitions, triggers, and utilization guidelines.

The LTC MDS includes standard demographic data for identification such as resident name, Social Security Number, Medicare number, Medicaid number, gender, race/ethnicity, and birth date. The MDS may also contain data elements that describe the resident's health status in the following areas:

Customary Routines
Cognitive Patterns
Communication/Hearing Patterns
Vision Patterns
Mood and Behavior Patterns
Psychosocial Well-being
Physical Functioning and Structural Problems
Continence Status
Disease Diagnoses
Health Conditions
Oral/Nutritional Status
Oral/Dental Status
Skin Condition
Activity Pursuit Patterns
Medications
Special Treatments and Procedures
Discharge Potential and Overall Status
Participation in Assessment

The Privacy Act allows us to disclose information without an individual's consent if the information is to be used for a purpose which is compatible with the purpose(s) for which the information was collected. Any such compatible use of data is known as a ''routine use.'' The proposed routine uses in this system meet the compatibility requirement of the Privacy Act.

Dated: May 19, 1998.

Nancy-Ann Min DeParle,

Administrator, Health Care Financing Administration.

09–70–1516

SYSTEM NAME:

Long Term Care Minimum Data Set (LTC MDS), HHS/HCFA/CMSO.

SECURITY CLASSIFICATION:

None.

SYSTEM LOCATION:

HCFA Data Center, 7500 Security Boulevard, Baltimore, Maryland 21244–1850.

HCFA contractors and agents at various locations.

CATEGORIES OF INDIVIDUALS COVERED BY THE SYSTEM:

Residents in all LTC facilities that are Medicare and/or Medicaid certified, including private pay individuals.

CATEGORIES OF RECORDS IN THE SYSTEM:

Individual-level demographic and identifying data as well as clinical status data.

AUTHORITY FOR MAINTENANCE OF THE SYSTEM:

Sections 1102(a), 1819(f), 1919(f), 1819(b)(3)(A), 1919(b)(3)(A), and 1864 of the Social Security Act.

PURPOSE(S):

To aid in the administration of the survey and certification of Medicare/Medicaid LTC facilities and to study the effectiveness and quality of care given in those facilities. This system will also support regulatory, reimbursement, policy, and research functions, and enable regulators to provide long term care facility staff with outcome data for providers' internal quality improvement activities.

ROUTINE USE OF RECORDS MAINTAINED IN THE SYSTEM, INCLUDING CATEGORIES OF USERS AND THE PURPOSES OF SUCH USES:

These routine uses specify additional circumstances under which HCFA may release information from the LTC MDS system without the consent of the individual to whom such information pertains. Each proposed disclosure of information under these routine uses will be evaluated to ensure that the disclosure is legally permissible, including but not limited to ensuring that the purpose of the disclosure is compatible with the purpose for which the information was collected. Also, HCFA will require each prospective recipient of such information to agree in writing to certain conditions to ensure the continuing confidentiality and physical safeguards of the information. More specifically, as a condition of each disclosure under these routine uses, HCFA will, as necessary and appropriate:

(a) Determine that no other Federal statute specifically prohibits disclosure of the information;

(b) Determine that the use or disclosure does not violate legal limitations under which the information was provided, collected, or obtained;

(c) Determine that the purpose for which the disclosure is to be made;

(1) Cannot reasonably be accomplished unless the information is provided in individually identifiable form;

(2) Is of sufficient importance to warrant the effect on or the risk to the privacy of the individual(s) that additional exposure of the record(s) might bring; and

(3) There is a reasonable probability that the purpose of the disclosure will be accomplished;

(d) Require the recipient of the information to:

(1) Establish reasonable administrative, technical, and physical safeguards to prevent unauthorized access, use, or disclosure of the record or any part thereof. The physical safeguards shall provide a level of security that is at least the equivalent to the level of security contemplated in OMB Circular No. A–130 (revised), Appendix III, Security of Federal Automated Information Systems which sets forth guidelines for security plans for automated information systems in Federal agencies.

(2) Remove or destroy the information that allows subject individual(s) to be identified at the earliest time at which removal or destruction can be accomplished, consistent with the purpose of the request;

(3) Refrain from using or disclosing the information for any purpose other than the stated purpose under which the information was disclosed; and

(4) Make no further use or disclosure of the information except:

(i) To prevent or address an emergency directly affecting the health or safety of an individual;

(ii) For use on another project under the same conditions, provided HCFA has authorized the additional use(s) in writing; or

(iii) When required by law;

(e) Secure a written statement or agreement from the prospective recipient of the information whereby the prospective recipient attests to an understanding of, and willingness to abide by, the foregoing provisions and any additional provisions that HCFA deems appropriate in the particular circumstance; and

(f) Determine whether the disclosure constitutes a computer ''matching program'' as defined in 5 U.S.C. 552a(a)(8). If the disclosure is determined to be a computer ''matching program,'' the instructions regarding preparation and transmission of a matching agreement as stated in 5 U.S.C. 552a(o) must be followed.

Disclosure may be made:

1. To a Congressional office from the record of an individual in response to an inquiry from the Congressional office made at the request of that individual.

2. To the Bureau of Census for use in processing research and statistical data directly related to the administration of Agency programs.

3. To the Department of Justice, to a court or other tribunal, or to another party before such tribunal, when:

(a) HHS, or any component thereof;

(b) Any HHS employee in his or her official capacity; or

(c) Any HHS employee in his or her individual capacity where the Department of Justice (or HHS, where it is authorized to do so) has agreed to represent the employee; or

(d) The United States or any agency thereof where HHS determines that the litigation is likely to affect HHS or any of its components; is party to litigation or has an interest to such litigation, and HHS determines that the use of such records by the Department of Justice, the tribunal, or the other party is relevant and necessary to the litigation and would help in the effective presentation of the governmental party or interest, provided, however, that in each case HHS determines that such disclosure is compatible with the purpose for which the records were collected.

4. To an individual or organization for a research, evaluation, or epidemiological project related to the prevention of disease or disability, or the restoration or maintenance of health.

5. To a HCFA contractor for the purpose of collating, analyzing, aggregating, or otherwise refining or processing records in this system or for developing, modifying, and/or manipulating automated data processing (ADP) software. Data could also be disclosed to contractors incidental to consultation, programming, operation, user assistance, or maintenance for ADP or telecommunications systems containing or supporting records in the system.

6. To an agency of a state government, or established by state law, for purposes of determining, evaluating, and/or assessing overall or aggregate cost, effectiveness, and/or quality of health care services provided in the state; or for the purpose of administration of federal-state health care programs within the state. Data will be released to the state only on those individuals who are either residents in long term care facilities within the state or are legal residents of the state irrespective of the location of the LTC facility wherein they are residents. In effect, only data collected by the state for HCFA may be released for this purpose.

7. To another Federal agency (1) To contribute to the accuracy of HCFA's proper payment of Medicare health benefits, and/or (2) to enable such agency to administer a Federal health benefits program, or as necessary to enable such agency to fulfill a requirement of a Federal statute or regulation that implements a health benefits program funded in whole or in part with Federal funds.

8. To a HCFA contractor to perform Title XI or Title XVIII (of the Social Security Act) functions. Records from the LTC MDS may be released to a Peer Review Organization (PRO), or other HCFA contractor respectively, for performing medical review functions under these provisions of the law.

9. To a HCFA contractor, including but not limited to, fiscal intermediaries and carriers under Title XVIII of the Social Security Act, to administer some aspect of a HCFA-administered health benefits program, or to a grantee of a HCFA-administered grant program, which program is or could be affected by fraud or abuse, for the purpose of preventing, deterring, discovering, detecting, investigating, examining, prosecuting, suing with respect to, defending against, correcting, remedying, or otherwise combating such fraud or abuse in such programs.

10. To another Federal agency or to an instrumentality of any governmental jurisdiction within or under the control of the United States, including any state or local government agency, for the purpose of preventing, deterring, discovering, detecting, investigating, examining, prosecuting, suing with respect to, defending against, correcting, remedying, or otherwise combating such fraud or abuse in such programs.

11. To any entity that makes payment for or oversees administration of health care services, for the purpose of preventing, deterring, discovering, detecting, investigating, examining, prosecuting, suing with respect to, defending against, correcting, remedying, or otherwise combating fraud or abuse against such entity or the program or services administered by such entity, provided:

(i) Such entity enters into an agreement with HCFA to share knowledge and information regarding actual or potential fraudulent or abusive practices or activities regarding the delivery or receipt of health care services, or regarding securing payment or reimbursement for health care services, or any practice or activity that, if directed toward a HCFA-administered program, might reasonably be construed as actually or potentially fraudulent or abusive;

(ii) Such entity does, on a regular basis, or at such times as HCFA may request, fully and freely share such knowledge and information with HCFA, or as directed by HCFA, with HCFA's contractors; and

(iii) HCFA determines that it may reasonably conclude that the knowledge or information it has received or is likely to receive from such entity could lead to preventing, deterring, discovering, detecting, investigating, examining, prosecuting, suing with respect to, defending against, correcting, remedying, or otherwise combating fraud or abuse in the Medicare, Medicaid, or other health benefits program administered by HCFA or funded in whole or in part by Federal funds.

POLICIES AND PRACTICES FOR STORING, RETRIEVING, ACCESSING, RETAINING, AND DISPOSING OF RECORDS IN THE SYSTEM:

STORAGE:

All records are stored on magnetic media.

RETRIEVABILITY:

All records are retrieved by Social Security Number or Health Insurance Claim Number or by state-assigned Medicaid number.

SAFEGUARDS:

For computerized records, safeguards established in accordance with Department standards and National Institute of Standards and Technology guidelines (e.g., security codes) will be used, limiting access to authorized personnel. System securities are established in accordance with HHS, Information Resource Management (IRM) Circular #10, Automated Information Systems (AIS) Guide, Systems Security Policies, and OMB Circular No. A–130 (revised), Appendix III.

RETENTION AND DISPOSAL:

Records are maintained with identifiers as long as needed for program research.

SYSTEM MANAGER(S) AND ADDRESS:

Director, Center for Medicaid and State Operations, 7500 Security Boulevard, Baltimore, Maryland, 21244–1850.

NOTIFICATION PROCEDURE:

To determine whether the individual's record is in the system, the subject individual should write to the system manager and furnish the following information: Name of system; health insurance claim number; and for verification purposes, the subject individual's name (woman's maiden name, if applicable), social security number, address, date of birth, and sex.

RECORD ACCESS PROCEDURES:

For purpose of access, use the same procedures outlined in Notification Procedures above. Individuals in the system should also reasonably specify the record contents being sought. (These access procedures are in accordance with the Department regulations 45 CFR 5b.5.)

CONTESTING RECORD PROCEDURES:

The subject individual should contact the system manager named above, and reasonably identify the record and specify the information to be contested. State the corrective action sought and the reasons for the correction with supporting justification. (These procedures are in accordance with Department regulations 45 CFR 5b.7.)

RECORD SOURCE CATEGORIES:

LTC Resident Assessment Instrument which includes the minimum data set and resident assessment protocols.

SYSTEMS EXEMPTED FROM CERTAIN PROVISIONS OF THE ACT:

None.

[FR Doc. 98–13856 Filed 5–21–98; 8:45 am]

BILLING CODE 4120–03–P

DEPARTMENT OF HOUSING AND URBAN DEVELOPMENT

[Docket No. FR–4341–N–11]

Federal Property Suitable as Facilities to Assist the Homeless

AGENCY: Office of the Assistant Secretary for Community Planning and Development, HUD.

ACTION: Notice.

SUMMARY: This Notice identifies unutilized, underutilized, excess, and surplus Federal property reviewed by HUD for suitability for possible use to assist the homeless.

FOR FURTHER INFORMATION CONTACT: Mark Johnston, room 7256, Department of Housing and Urban Development, 451 Seventh Street SW., Washington, DC 20410; telephone (202) 708–1226; TTY number for the hearing and speech-impaired (202) 708–2565 (these telephone numbers are not toll-free), or call the toll-free Title V information line at 1–800–927–7588.

SUPPLEMENTARY INFORMATION: In accordance with 24 CFR part 581 and section 501 of the Stewart B. McKinney Homeless Assistance Act (42 U.S.C. 11411), as amended, HUD is publishing this Notice to identify Federal buildings and other real property that HUD has reviewed for suitability for use to assist the homeless. The properties were reviewed using information provided to HUD by Federal landholding agencies regarding unutilized and underutilized buildings and real property controlled by such agencies or by GSA regarding its inventory of excess or surplus Federal property. This Notice is also published in order to comply with the December 12, 1988 Court Order in *National Coalition for the Homeless* v. *Veterans Administration*, No. 88–2503–OG (D.D.C.).

Properties reviewed are listed in this Notice according to the following

categories: Suitable/available, suitable/unavailable, suitable/to be excess, and unsuitable. The properties listed in the three suitable categories have been reviewed by the landholding agencies, and each agency has transmitted to HUD: (1) Its intention to make the property available for use to assist the homeless, (2) its intention to declare the property excess to the agency's needs, or (3) a statement of the reasons that the property cannot be declared excess or made available for use as facilities to assist the homeless.

Properties listed as suitable/available will be available exclusively for homeless use for a period of 60 days from the date of this Notice. Homeless assistance providers interested in any such property should send a written expression of interest to HHS, addressed to Brian Rooney, Division of Property Management, Program Support Center, HHS, room 5B–41, 5600 Fishers Lane, Rockville, MD 20857; (301) 443–2265. (This is not a toll-free number.) HHS will mail to the interested provider an application packet, which will include instructions for completing the application. In order to maximize the opportunity to utilize a suitable property, providers should submit their written expressions of interest as soon as possible. For complete details concerning the processing of applications, the reader is encouraged to refer to the interim rule governing this program, 24 CFR part 581.

For properties listed as suitable/to be excess, that property may, if subsequently accepted as excess by GSA, be made available for use by the homeless in accordance with applicable law, subject to screening for other Federal use. At the appropriate time, HUD will publish the property in a Notice showing it as either suitable/available or suitable/unavailable.

For properties listed as suitable/unavailable, the landholding agency has decided that the property cannot be declared excess or made available for use to assist the homeless, and the property will not be available.

Properties listed as unsuitable will not be made available for any other purpose for 20 days from the date of this Notice. Homeless assistance providers interested in a review by HUD of the determination of unsuitability should call the toll free information line at 1–800–927–7588 for detailed instructions or write a letter to Mark Johnston at the address listed at the beginning of this Notice. Included in the request for review should be the property address (including zip code), the date of publication in the **Federal Register**, the landholding agency, and the property number.

For more information regarding particular properties identified in this Notice (*i.e.*, acreage, floor plan, existing sanitary facilities, exact street address), providers should contact the appropriate landholding agencies at the following addresses: AIR FORCE: Ms Barbara Jenkins, Air Force Real Estate Agency, Area–MI, Bolling Air Force Base, 112 Luke Avenue, Suite 104, Building 5683, Washington, DC 20332–8020; (202) 767–4184; ARMY: Mr. Jeff Holste, CECPW–FP, U.S. Army Center for Public Works, 7701 Telegraph Road, Alexandria, VA 22315; (703) 428–6318; COE: Mr. Bob Swieconek, Army Corps of Engineers, Management & Disposal Division, Pulaski Building, Room 4224, 20 Massachusetts Avenue, NW., Washington, DC 20314–1000; (202) 761–1749; INTERIOR: Ms. Lola D. Knight, Department of the Interior, 1849 C Street, NW., Mail Stop 5512–MIB, Washington, DC 20240; (202) 208–4080; GSA: Mr. Brian K. Polly, Assistant Commissioner, General Services Administration, Office of Property Disposal, 18th and F Streets, NW., Washington, DC 20405; (202) 501–2059; NAVY: Mr. Charles C. Cocks, Department of the Navy, Director, Real Estate Policy Division, Naval Facilities Engineering Command, Code 241A, 200 Stovall Street, Alexandria, VA 22332–2300; (703) 325–7342; (These are not toll-free numbers).

Dated: May 14, 1998.

Fred Karnas, Jr.,

Deputy Assistant Secretary for Economic Development.

Title V, Federal Surplus Property Program Federal Register Report for May 22, 1998

Suitable/Available Properties

Buildings (by State)

Connecticut

USCG Cutter Redwood Pier
150 Bank Street
New London CT 06320–6002
Landholding Agency: GSA
Property Number: 549810017
Status: Excess
Comment: garage, shed, guard house located on concrete pier, most recent use—storage
GSA Number: 1–U–CT–540

Maryland

Former Physioc Property
NPS Tract 402–29
Jugtown Co: Washington, MD 21713–
Landholding Agency: Interior
Property Number: 619820005
Status: Excess
Comment: 227 sq. ft. stone cabin, off-site use only

Mississippi

Quarters #196
Dancy District, Natchez Tract
Mantee Co: Webster MS 39751–
Landholding Agency: Interior
Property Number: 619820008
Status: Excess
Comment: 1200 sq. ft., needs rehab, off-site use only

New Hampshire

Bldg. 246
Portsmouth Naval Shipyard
Portsmouth NH 03804–5000
Landholding Agency: Navy
Property Number: 779820028
Status: Unutilized
Comment: metal frame structure, off-site use only

Bldg. 335
Portsmouth Naval Shipyard
Portsmouth NH 02804–5000
Landholding Agency: Navy
Property Number: 779820029
Status: Unutilized
Comment: 1000 sq. ft., brick, off-site use only

New Mexico

Bldg. 834
Kirtland AFB Co: Bernalillo NM 87117–5000
Landholding Agency: Air Force
Property Number: 189820022
Status: Unutilized
Comment: 2936 sq. ft., presence of lead, most recent use—residence, off-site use only

12 Bldgs.
Kirtland AFB Co: Bernalillo NM 87117–5000
Location: 829–833, 836–841, 843
Landholding Agency: Air Force
Property Number: 189820023
Status: Unutilized
Comment: approx. 273 sq. ft., presence of lead, most recent use—residence, off-site use only

9 Bldgs.
Kirtland AFB Co: Bernalillo NM 87117–5000
Location: 835, 845, 23009, 23011–23012, 23038, 23042, 23045, 23073
Landholding Agency: Air Force
Property Number: 189820024
Status: Unutilized
Comment: approx. 1482 sq. ft., presence of lead, most recent use—residence, off-site use only

Bldgs. 23301, 23329, 23333
Kirtland AFB Co: Bernalillo NM 87117–5000
Landholding Agency: Air Force
Property Number: 189820025
Status: Unutilized
Comment: approx. 1813 sq. ft., presence of leaad, most recent use—residential, off-site use only

37Bldgs.
Kirtland AFB Co: Bernalillo NM 87117–5000
Location 23040, 23064, 23066–23067, 23070, 23135–23137, 23140, 23142–23143, 23176–23181, 23184, 23300, 23302–23306, 23309, 23320, 23323–23327, 23330, 23332, 2335
Landholding Agency: Air Force
Property Number: 189820026
Status: Unutilized
Comment: approx. 1096 sq. ft., presence of lead, most recent use—residence, off-site use only

9 Bldgs.
Kirtland AFB Co: Bernalillo NM 87117–5000

Location: 23013–23014, 23045, 23065, 23069, 23072, 23134, 23138, 23141
Landholding Agency: Air Force
Property Number: 189820027
Status: Unutilized
Comment: approx. 1299 sq. ft., presence of lead, most recent use—residence, off-site use only

18 Bldgs.
Kirtland AFB Co. Bernalillo NM 87117–5000
Location: 23010, 23015, 23041, 23043, 23046, 23063, 23068, 23071, 23139, 23144, 23182–23183, 23307–23308, 23322, 23328, 23334, 23340
Landholding Agency Air Force
Property Number: 189820028
Status: Unutilized
Comment: approx. 1358 sq. ft., presence of lead, most recent use—residence, off-site use only

Bldgs. 23016, 23017
Kirtland AFB Co: Bernalillo NM 87117–5000
Landholding Agency: Air Force
Property Number: 189820029
Status: Unutilized
Comment: 4019 sq. ft., presence of lead, most recent use—residence, off-site use only

Virginia

Former Mayhew Property
NPS Tract 475–27
Catawba Co. Botetourt VA 24070–
Landholding Agency: Interior
Property Number: 619820004
Status: Excess
Comment: 936 sq. ft. cabin off-site use only

Suitable/Unavailable Properties

Land (by State)

Oklahoma

Land Lake Texoma Co: Bryan OK
Landholding Agency: COE
Property Number: 319820002
Status: Excess
Comment: 8.262 acres, most recent use—undeveloped recreation

Unsuitable Properties

Buildings (by State)

Alabama

Bldg. 247
Redstone Arsenal
Redstone Arsenal Co: Madison AL 35898–5000
Landholding Agency: Army
Property Number: 219820007
Status: Unutilized
Reason: Secured Area, Extensive deterioration

Bldg. 248
Redstone Arsenal
Redstone Arsenal Co: Madison AL 35898–5000
Landholding Agency: Army
Property Number: 219820008
Status: Unutilized
Reason: Secured Area, Extensive deterioration

Bldg. 249
Redstone Arsenal
Redstone Arsenal Co: Madison AL 35898–5000
Landholding Agency: Army
Property Number: 219820009
Status: Unutilized
Reason: Secured Area, Extensive deterioration

Bldg. 3551
Redstone Arsenal
Redstone Arsenal Co: Madison AL 35898–5000
Landholding Agency: Army
Property Number: 219820010
Status: Unutilized
Reason: Secured Area, Extensive deterioration

Bldg. 3624
Redstone Arsenal
Redstone Arsenal Co: Madison AL 35898–5000
Landholding Agency: Army
Property Number: 219820011
Status: Unutilized
Reason: Secured Area, Extensive deterioration

Bldg. 6109
Redstone Arsenal
Redstone Arsenal Co: Madison AL 35898–5000
Landholding Agency: Army
Property Number: 219820012
Status: Unutilized
Reason: Secured Area, Extensive deterioration

Bldg. 7115
Redstone Arsenal
Redstone Arsenal Co: Madison AL 35898–5000
Landholding Agency: Army
Property Number: 219820013
Status: Unutilized
Reason: Secured Area, Extensive deterioration

Bldg. 8009
Redstone Arsenal
Redstone Arsenal Co: Madison AL 35898–5000
Landholding Agency: Army
Property Number: 219820014
Status: Unutilized
Reason: Secured Area, Extensive deterioration

Bldg. 8020
Redstone Arsenal
Redstone Arsenal Co: Madison AL 35898–5000
Landholding Agency: Army
Property Number: 219820015
Status: Unutilized
Reason: Secured Area, Extensive deterioration

Bldg. 3503, 3712–3713, 3820
Fort Rucker
Ft. Rucker Co: Dale AL 36362–5000
Landholding Agency: Army
Property Number: 219820016
Status: Unutilized
Reason: Extensive deterioration

Bldg. 6608, 20005
Fort Rucker
Ft. Rucker Co: Dale AL 36362–5000
Landholding Agency: Army
Property Number: 219820017
Status: Unutilized
Reason: Extensive deterioration

Alaska

Bldg. 1771
Galena Airport
Elmendorf AFB AK 99506–2270
Landholding Agency: Air Force
Property Number: 189820001
Status: Unutilized
Reason: Secured Area, Extensive deterioration

Bldg. 16
Fort Wainwright
Ft. Wainwright Co: North Star AK 99703–6505
Landholding Agency: Army
Property Number: 219820001
Status: Unutilized
Reason: Extensive deterioration

Bldg. 1559
Fort Wainwright
Ft. Wainwright Co: North Star AK 99703–6505
Landholding Agency: Army
Property Number: 219820002
Status: Unutilized
Reason: Within airport runway clear zone Floodway

Bldg. 4174
Fort Wainwright
Ft. Wainwright Co: North Star AK 99703–6505
Landholding Agency: Army
Property Number: 219820003
Status: Unutilized
Reason: Floodway

Bldg. 15182
Fort Wainwright
Ft. Wainwright Co: North Star AK 99703–6505
Landholding Agency: Army
Property Number: 219820004
Status: Unutilized
Reason: Within 2000 ft. of flammable or explosive material, Floodway

Bldg. 15183
Fort Wainwright
Ft. Wainwright Co: North Star AK 99703–6505
Landholding Agency: Army
Property Number: 219820005
Status: Unutilized
Reason: Within 2000 ft. of flammable or explosive material, Floodway

Bldg. 15189
Fort Wainwright
Ft. Wainwright Co: North Star AK 99703–6505
Landholding Agency: Army
Property Number: 219820006
Status: Unutilized
Reason: Within 2000 ft. of flammable or explosive material, Floodway, Extensive deterioration

Arkansas

Dwelling
Bull Shoals Lake/Dry Run Road
Oakland Co: Marion AR 72661–
Landholding Agency: COE
Property Number: 319820001
Status: Unutilized
Reason: Extensive deterioration

California

Bldg. 00907
Vandenberg AFB Co: Santa Barbara CA 93437–
Landholding Agency: Air Force
Property Number: 189820002
Status: Unutilized

Reason: Secured Area, Extensive deterioration

Bldg. 1681
Vanderberg AFB Co: Santa Barbara CA 93437–
Landholding Agency: Air Force
Property Number: 189820003
Status: Unutilized
Reason: Secured Area, Extensive deterioration

Bldg. 01839
Vandenberg AFB Co: Santa Barbara CA 93437–
Landholding Agency: Air Force
Property Number: 189820004
Status: Unutilized
Reason: Secured Area, Extensive deterioration

Bldg. 06519
Vandenberg AFB Co: Santa Barbara CA 93437–
Landholding Agency: Air Force
Property Number: 189820005
Status: Unutilized
Reason: Secured Area, Extensive deterioration

Bldg. 06526
Vandenberg AFB Co: Santa Barbara CA 93437–
Landholding Agency: Air Force
Property Number: 189820006
Status: Unutilized
Reason: Secured Area, Extensive deterioration

Bldg. 11167
Vandenberg AFB Co: Santa Barbara CA 93437–
Landholding Agency: Air Force
Property Number: 189820007
Status: Unutilized
Reason: Secured Area, Extensive deterioration

Bldg. 11168
Vandenberg AFB Co: Santa Barbara CA 93437–
Landholding Agency: Air Force
Property Number: 189820008
Status: Unutilized
Reason: Secured Area, Extensive deterioration

Bldg. 258
Fort Hunter Liggett
Ft. Hunter Liggett Co: Monterey CA 93928–7010
Landholding Agency: Army
Property Number: 219820019
Status: Unutilized
Reason: Within 2000 ft. of flammable or explosive material, Secured Area

Bldg. 313
Fort Hunter Liggett
Ft. Hunter Liggett Co: Monterey CA 93928–7010
Landholding Agency: Army
Property Number: 219820020
Status: Unutilized
Reason: Within 2000 ft. of flammable or explosive material, Secured Area

Bldg. 888
Parks Reserve Forces Trng Area
Dublin Co: Alameda CA 94568–5201
Landholding Agency: Army
Property Number: 219820021
Status: Unutilized
Reason: Extensive deterioration

Bldg. 1104
Parks Reserve Forces Trng Area
Dublin Co: Alameda CA 94568–5201
Landholding Agency: Army
Property Number: 219820022
Status: Unutilized
Reason: Extensive deterioration

Brandy Creek Residence #608
Whiskeytown Co: Shasta CA 96095–
Landholding Agency: Interior
Property Number: 619820006
Status: Excess
Reason: Extensive deterioration

Colorado

Bldg. T–1543
fort Carson
Ft. Carson Co: El Paso CO 80913–5023
Landholding Agency: Army
Property Number: 219820023
Status: Unutilized
Reason: Extensive deterioration

Bldg. P–9501
Fort Carson
Ft Carson Co: El Paso CO 80913–5023
Landholding Agency: Army
Property Number: 219820024
Status: Unutilized
Reason: Extensive deterioration

Bldg. P–9502
Fort Carson
Ft. Carson Co: El Paso CO 80913–5023
Landholding Agency: Army
Property Number: 219820025
Status: Unutilized
Reason: Extensive deterioration

Bldg. P–9503
Fort Carson
Ft. Carson Co: El Paso CO 80913–5023
Landholding Agency: Army
Property Number: 219820026
Status: Unutilized
Reason: Extensive deterioration

Florida

Bldg. 744
Eglin AFB Co: Okaloosa FL 32542–5133
Landholding Agency: Air Force
Property Number: 189820009
Status: Unutilized
Reason: Secured Area, Extensive deterioration

Bldg. 3008
Eglin AFB Co: Okaloosa FL 32542–5133
Landholding Agency: Air Force
Property Number: 189820010
Status: Unutilized
Reason: Secured Area, Extensive deterioration

Bldg. 3010
Eglin AFB Co: Okaloosa FL 32542–5133
Landholding Agency: Air Force
Property Number: 189820011
Status: Unutilized
Reason: Secured Area, Extensive deterioration

Bldg. 12709
Eglin AFB Co: Okaloosa FL 32542–5133
Landholding Agency: Air Force
Property Number: 189820012
Status: Unutilized
Reason: Secured Area, Extensive deterioration

Bldg. 08807
Cape Canaveral Air Station Co: Brevard FL 32925–
Landholding Agency: Air Force
Property Number: 189820013
Status: Unutilized
Reason: Secured Area

Bldg. 08809
Cape Canaveral Air Station Co: Brevard FL 32925–
Landholding Agency: Air Force
Property Number: 189820014
Status: Unutilized
Reason: Secured Area, Extensive deterioration

Bldg. 21911
Cape Canaveral Air Station Co: Brevard FL 32925–
Landholding Agency: Air Force
Property Number: 189820015
Status: Unutilized
Reason: Secured Area, Extensive deterioration

Bldg. 21914
Cape Canaveral Air Station Co: Brevard FL 32925–
Landholding Agency: Air Force
Property Number: 189820016
Status: Unutilized
Reason: Secured Area, Extensive deterioration

Bldg. 32349
Cape Canaveral Air Station Co: Brevard FL 32925–
Landholding Agency: Air Force
Property Number: 189820017
Status: Unutilized
Reason: Secured Area, Extensive deterioration

Illinois

Bldgs. T–20, T–21, T–23
Charles Melvin Price Support Center
Granite City Co: Madison IL 62040–
Landholding Agency: Army
Property Number: 219820027
Status: Underutilized
Reason: Floodway, Secured Area

Bldg. T–116
Charles Melvin Price Support Center
Granite City Co: Madison IL 62040–
Landholding Agency: Army
Property Number: 219820028
Status: Unutilized
Reason: Floodway, Secured Area

Bldg. S–198
Charles Melvin Price Support Center
Granite City Co: Madison IL 62040–
Landholding Agency: Army
Property Number: 219820029
Status: Unutilized
Reason: Floodway, Secured Area

Bldg. S–311
Charles Melvin Price Support Center
Granite City Co: Madison IL 62040–
Landholding Agency: Army
Property Number: 219820030
Status: Unutilized
Reason: Floodway, Secured Area

Indiana

Bldg. 401A
Newport Chemical Depot
Newport Co: Vermillion IN 47966–
Landholding Agency: Army
Property Number: 219820031

Status: Unutilized
Reason: Within 2000 ft. of flammable or explosive material, Secured Area

Bldg. 704A
Newport Chemical Depot
Newport Co: Vermillion IN 47966–
Landholding Agency: Army
Property Number: 219820032
Status: Unutilized
Reason: Within 2000 ft. of flammable or explosive material, Secured Area

Kansas

Bldg. 2703
Forbes Field
Topeka KS
Landholding Agency: Air Force
Property Number: 189820018
Status: Unutilized
Reason: Extensive deterioration

Kentucky

Bldg. 1395
Fort Knox
Fort Knox Co: Hardin KY 40121–
Landholding Agency: Army
Property Number: 219820033
Status: Unutilized
Reason: Extensive deterioration

Bldg. 6584
Fort Knox
Ft. Knox Co: Hardin KY 40121–
Landholding Agency: Army
Property Number: 219820034
Status: Unutilized
Reason: Extensive deterioration

Louisiana

Bldg. 7703
Fort Polk
Ft. Polk Co: Vernon LA 71459–
Landholding Agency: Army
Property Number: 219820035
Status: Unutilized
Reason: Floodway, Extensive deterioration

Bldg. 7704
Fort Polk
Ft. Polk Co: Vernon LA 71459–
Landholding Agency: Army
Property Number: 219820036
Status: Unutilized
Reason: Floodway, Extensive deterioration

Bldg. 7705
Fort Polk
Ft. Polk Co: Vernon LA 71459–
Landholding Agency: Army
Property Number: 219820037
Status: Unutilized
Reason: Floodway, Extensive deterioration

Bldg. 7720
Fort Polk
Ft. Polk Co: Vernon LA 71459–
Landholding Agency: Army
Property Number: 219820038
Status: Unutilized
Reason: Floodway, Extensive deterioration

Bldg. 7721
Fort Polk
Ft. Polk Co: Vernon LA 71459–
Landholding Agency: Army
Property Number: 219820039
Status: Unutilized
Reason: Floodway, Extensive deterioration

Bldg. 7723
Fort Polk
Ft. Polk Co: Vernon LA 71459–
Landholding Agency: Army
Property Number: 219820040
Status: Unutilized
Reason: Floodway, Extensive deterioration

Bldg. 7724
Fort Polk
Ft. Polk Co: Vernon LA 71459–
Landholding Agency: Army
Property Number: 219820041
Status: Unutilized
Reason: Floodway, Extensive deterioration

Bldg. 8059
Fort Polk
Ft. Polk Co: Vernon LA 71459–
Landholding Agency: Army
Property Number: 219820042
Status: Unutilized
Reason: Floodway

Bldg. 8240
Fort Polk
Ft. Polk Co: Vernon LA 71459–
Landholding Agency: Army
Property Number: 219820043
Status: Unutilized
Reason: Floodway, Extensive deterioration

Bldg. M1–629
Louisiana AAP
Doyline Co: Webster LA 71023–
Landholding Agency: Army
Property Number: 219820044
Status: Excess
Reason: Floodway, Secured Area

Bldg. M1–630
Louisiana AAP
Doyline Co: Webster LA 71023–
Landholding Agency: Army
Property Number: 219820045
Status: Excess
Reason: Floodway, Secured Area

Bldg. M1–631
Louisiana AAP
Doyline Co: Webster LA 71023–
Landholding Agency: Army
Property Number: 219820046
Status: Excess
Reason: Floodway, Secured Area

Bldg. M3–208
Louisiana AAP
Doyline Co: Webster LA 71023–
Landholding Agency: Army
Property Number: 219820047
Status: Excess
Reason: Floodway, Secured Area

Bldg. M3–209
Louisiana AAP
Doyline Co: Webster LA 71023–
Landholding Agency: Army
Property Number: 219820048
Status: Excess
Reason: Floodway, Secured Area

Bldg. M4–2704
Louisiana AAP
Doyline Co: Webster LA 71023–
Landholding Agency: Army
Property Number: 219820049
Status: Excess
Reason: Floodway, Secured Area

Bldg. B–1401
Louisiana AAP
Doyline Co: Webster LA 71023–
Landholding Agency: Army
Property Number: 219820050
Status: Excess
Reason: Floodway, Secured Area

Bldg. B–1412
Louisiana AAP
Doyline Co: Webster LA 71023–
Landholding Agency: Army
Property Number: 219820051
Status: Excess
Reason: Floodway, Secured Area

Bldg. B–1427
Louisiana AAP
Doyline Co: Webster LA 71023–
Landholding Agency: Army
Property Number: 219820052
Status: Excess
Reason: Within 2000 ft. of flammable or explosive material, Secured Area

Bldg. B–1433–053
Louisiana AAP
Doyline Co: Webster LA 71023–
Landholding Agency: Army
Property Number: 219820053
Status: Excess
Reason: Floodway, Secured Area

Bldg. B–1434
Louisiana AAP
Doyline Co: Webster LA 71023–
Landholding Agency: Army
Property Number: 219820054
Status: Excess
Reason: Floodway, Secured Area

Bldg. B–1454
Louisiana AAP
Doyline Co: Webster LA 71023–
Landholding Agency: Army
Property Number: 219820055
Status: Excess
Reason: Floodway, Secured Area

Bldg. B–1455
Louisiana AAP
Doyline Co: Webster LA 71023–
Landholding Agency: Army
Property Number: 219820056
Status: Excess
Reason: Floodway, Secured Area

Bldg. B–1464
Louisiana AAP
Doyline Co: Webster LA 71023–
Landholding Agency: Army
Property Number: 219820057
Status: Excess
Reason: Floodway, Secured Area

Bldg. B–1472
Louisiana AAP
Doyline Co: Webster LA 71023–
Landholding Agency: Army
Property Number: 219820058
Status: Excess
Reason: Floodway, Secured Area

Bldg. C–1322
Louisiana AAP
Doyline Co: Webster LA 71023–
Landholding Agency: Army
Property Number: 219820059
Status: Excess
Reason: Floodway, Secured Area

Bldg. C–1323
Louisiana AAP
Doyline Co: Webster LA 71023–
Landholding Agency: Army
Property Number: 219820060
Status: Excess
Reason: Floodway, Secured Area

Bldg. C–1348
Louisiana AAP

Doyline Co: Webster LA 71023–
Landholding Agency: Army
Property Number: 219820061
Status: Excess
Reason: Within 2000 ft. of flammable or explosive material, Secured Area

Bldg. D–1215
Louisiana AAP
Doyline Co: Webster LA 71023–
Landholding Agency: Army
Property Number: 219820062
Status: Excess
Reason: Within 2000 ft. of flammable or explosive material, Secured Area

Bldg. D–1232
Louisiana AAP
Doyline Co: Webster LA 71023–
Landholding Agency: Army
Property Number: 219820063
Status: Excess
Reason: Within 2000 ft. of flammable or explosive material, Secured Area

Bldg. D–1252
Louisiana AAP
Doyline Co: Webster LA 71023–
Landholding Agency: Army
Property Number: 219820064
Status: Excess
Reason: Floodway, Secured Area

Bldgs. STP–2000, 2001, 2002
Louisiana AAP
Doyline Co: Webster LA 71023–
Landholding Agency: Army
Property Number: 219820065
Status: Excess
Reason: Floodway, Secured Area

Bldg. STP–2004
Louisiana AAP
Doyline Co: Webster LA 71023–
Landholding Agency: Army
Property Number: 219820066
Status: Excess
Reason: Floodway, Secured Area

Bldg. W–2900
Louisiana AAP
Doyline Co: Webster LA 71023–
Landholding Agency: Army
Property Number: 219820067
Status: Excess
Reason: Floodway, Secured Area

4 Bldgs.
Louisiana AAP
W–2901, 2902, 2903, 2904
Doyline Co: Webster LA 71023–
Landholding Agency: Army
Property Number: 219820068
Status: Excess
Reason: Floodway, Secured Area

Bldgs. W–2905, 2906
Louisiana AAP
Doyline Co: Webster LA 71023–
Landholding Agency: Army
Property Number: 219820069
Status: Excess
Reason: Floodway, Secured Area

Bldg. W–2907
Louisiana AAP
Doyline Co: Webster LA 71023–
Landholding Agency: Army
Property Number: 219820070
Status: Excess
Reason: Floodway, Secured Area

Bldgs. X–5080, 5101, 5102
Louisiana AAP
Doyline Co: Webster LA 71023–
Landholding Agency: Army
Property Number: 219820071
Status: Excess
Reason: Floodway, Secured Area

Bldg. X–5104
Louisiana AAP
Doyline Co: Webster LA 71023–
Landholding Agency: Army
Property Number: 219820072
Status: Excess
Reason: Floodway, Secured Area

Bldg. X–5105
Louisiana AAP
Doyline Co: Webster LA 71023–
Landholding Agency: Army
Property Number: 219820073
Status: Excess
Reason: Floodway, Secured Area

Bldgs. X–5107, X–5115
Louisiana AAP
Doyline Co: Webster LA 71023–
Landholding Agency: Army
Property Number: 219820074
Status: Excess
Reason: Floodway, Secured Area

Bldg. X–5114
Louisiana AAP
Doyline Co: Webster LA 71023–
Landholding Agency: Army
Property Number: 219820075
Status: Excess
Reason: Floodway, Secured Area

Bldg. X–5116
Louisiana AAP
Doyline Co: Webster LA 71023–
Landholding Agency: Army
Property Number: 219820076
Status: Excess
Reason: Floodway, Secured Area

Bldg. X–5117
Louisiana AAP
Doyline Co: Webster LA 71023–
Landholding Agency: Army
Property Number: 219820077
Status: Excess
Reason: Floodway, Secured Area

Bldg. Y–2604
Louisiana AAP
Doyline Co: Webster LA 71023–
Landholding Agency: Army
Property Number: 219820078
Status: Excess
Reason: Floodway, Secured Area

Maryland

Bldg. 00799
Aberdeen Proving Ground Co: Harford MD 21005–5001
Landholding Agency: Army
Property Number: 219820080
Status: Unutilized
Reason: Extensive deterioration

Bldg. 00897
Aberdeen Proving Ground Co: Harford MD 21005–5001
Landholding Agency: Army
Property Number: 219820081
Status: Unutilized
Reason: Extensive deterioration

Bldg. 1104A
Aberdeen Proving Ground Co: Harford MD 21005–5001
Landholding Agency: Army
Property Number: 219820082
Status: Unutilized
Reason: Extensive deterioration

Bldg. 1104B
Aberdeen Proving Ground Co: Harford MD 21005–5001
Landholding Agency: Army
Property Number: 219820083
Status: Unutilized
Reason: Extensive deterioration

Bldg. 01106
Aberdeen Proving Ground Co: Harford MD 21005–5001
Landholding Agency: Army
Property Number: 219820084
Status: Unutilized
Reason: Extensive deterioration

Bldg. 01107
Aberdeen Proving Ground Co: Harford MD 21005–5001
Landholding Agency: Army
Property Number 219820085
Status: Unutilized
Reason: Extensive deterioration

Bldg. 01162
Aberdeen Proving Ground Co: Harford MD 21005–5001
Landholding Agency: Army
Property Number 219820086
Status: Unutilized
Reason: Extensive deterioration

Bldg. 01184
Aberdeen Proving Ground Co: Harford MD 21005–5001
Landholding Agency: Army
Property Number 219820087
Status: Unutilized
Reason: Extensive deterioration

Bldg. 01184A
Aberdeen Proving Ground Co: Harford MD 21005–5001
Landholding Agency: Army
Property Number 219820088
Status: Unutilized
Reason: Extensive deterioration

Bldg. E1422
Aberdeen Proving Ground Co: Harford MD 21005–5001
Landholding Agency: Army
Property Number 219820089
Status: Unutilized
Reason: Extensive deterioration

Bldg. E3236
Aberdeen Proving Ground Co: Harford MD 21005–5001
Landholding Agency: Army
Property Number 219820090
Status: Unutilized
Reason: Extensive deterioration

Bldg. E3324
Aberdeen Proving Ground Co: Harford MD 21005–5001
Landholding Agency: Army
Property Number 219820091
Status: Unutilized
Reason: Extensive deterioration

Bldg. E3561
Aberdeen Proving Ground Co: Harford MD 21005–5001
Landholding Agency: Army
Property Number 219820092
Status: Unutilized
Reason: Extensive deterioration

Bldg. 04701

Aberdeen Proving Ground Co: Harford MD 21005–5001
Landholding Agency: Army
Property Number 219820093
Status: Unutilized
Reason: Extensive deterioration

Bldg. E5238
Aberdeen Proving Ground Co: Harford MD 21005–5001
Landholding Agency: Army
Property Number 219820094
Status: Unutilized
Reason: Extensive deterioration

Bldg. E5292
Aberdeen Proving Ground Co: Harford MD 21005–5001
Landholding Agency: Army
Property Number 219820095
Status: Unutilized
Reason: Extensive deterioration

Bldg. E5695
Aberdeen Proving Ground Co: Harford MD 21005–5001
Landholding Agency: Army
Property Number 219820096
Status: Unutilized
Reason: Extensive deterioration

Massachusetts

Bldg. 13
U.S. Army Soldier Systems Command
Natick Co: Middlesex MA 01760–
Landholding Agency: Army
Property Number 219820079
Status: Unutilized
Reason: Extensive deterioration

Montana

Bldg. 22
Great Falls IAP
Great Falls Co: Cascade MT 59404–5570
Landholding Agency: Army
Property Number 18920019
Status: Underutilized
Reason: Within 2000 ft. of flammable or explosive material Secured Area

Bldg. 13408
Malmstrom AFB Co: Cascade MT 59402–
Landholding Agency: Air Force
Property Number: 189820020
Status: Unutilized
Reason: Within 2000 ft. of flammable or explosive material, Within airport runway clear zone, Secured Area, Extensive deterioration

Bldg. 13415
Malmstrom AFB Co: Cascade MT 59402–
Landholding Agency: Air Force
Property Number: 189820021
Status: Unutilized
Reason: Within 2000 ft. of flammable or explosive material, Within airport runway clear zone, Secured Area, Extensive deterioration

New Jersey

Bldg. 604I
Picatinny Arsenal Picatinny Arsenal Co: Morris NJ 07806–5000
Landholding Agency: Army
Property Number: 219820097
Status: Unutilized
Reason: Extensive deterioration

New Mexico

Bldg. 00235
White Sands Missile Range
White Sands Co: Dona Ana NM 88002–
Landholding Agency: Army
Property Number: 219820098
Status: Unutilized
Reason: Extensive deterioration

Bldg. 00880
White Sands Missile Range
White Sands Co: Dona Ana NM 88002–
Landholding Agency: Army
Property Number: 219820099
Status: Unutilized
Reason: Extensive deterioration

Bldg. 34252
White Sands Missile Range
White Sands Co: Dona Ana NM 88002–
Landholding Agency: Army
Property Number: 219820100
Status: Unutilized
Reason: Extensive deterioration

North Carolina

Storage Bldg.
Great Smoky Mountains Natl. Park
Cherokee Co: Swain NC 28719–
Landholding Agency: Interior
Property Number: 619820007
Status: Unutilized
Reason: Extensive deterioration

Ohio

14 Bldgs.
Area B, Wright-Patterson AFB Co: Montgomery OH 45433–
Location: 6036, 38, 42, 44, 45, 49, 54, 64, 65, 69, 75
Landholding Agency: Air Force
Property Number: 189820030
Status: Unutilized
Reason: Within airport runway clear zone

Bldg. 1
Defense Supply Center
Columbus Co: Franklin OH 43216–5000
Landholding Agency: Army
Property Number: 219820101
Status: Unutilized
Reason: Extensive deterioration

Oklahoma

Bldg. 010
Tulsa IAP Base
Tulsa OK 74115–1699
Landholding Agency: Air Force
Property Number: 189820031
Status: Unutilized
Reason: Within 2000 ft. of flammable or explosive material, Secured Area

Bldg. 305
Tulsa IAP Base
Tulsa OK 74115–1699
Landholding Agency: Air Force
Property Number: 189820032
Status: Unutilized
Reason: Within 2000 ft. of flammable or explosive material, Secured Area

Bldg. 310
Tulsa IAP Base
Tulsa OK 74115–1699
Landholding Agency: Air Force
Property Number: 189820033
Status: Unutilized
Reason: Within 2000 ft. of flammable or explosive material, Secured Area

South Carolina

Bldg. 1532
Fort Jackson
Ft. Jackson Co: Richland SC 29207–
Landholding Agency: Army
Property Number: 219820102
Status: Unutilized
Reason: Extensive deterioration

Bldg. 1557
Fort Jackson
Ft. Jackson Co: Richland SC 29207–
Landholding Agency: Army
Property Number: 219820103
Status: Unutilized
Reason: Extensive deterioration

Bldg. 2500
Fort Jackson
Ft. Jackson Co: Richland SC 29207–
Landholding Agency: Army
Property Number: 219820104
Status: Unutilized
Reason: Extensive deterioration

Bldg. 2512
Fort Jackson
Ft. Jackson Co: Richland SC 29207–
Landholding Agency: Army
Property Number: 219820105
Status: Unutilized
Reason: Extensive deterioration

Bldg. 2549
Fort Jackson
Ft. Jackson Co: Richland SC 29207–
Landholding Agency: Army
Property Number: 219820106
Status: Unutilized
Reason: Extensive deterioration

Bldg. 3530
Fort Jackson
Ft. Jackson Co: Richland SC 29207–
Landholding Agency: Army
Property Number: 219820107
Status: Unutilized
Reason: Extensive deterioration

Bldg. 4520
Fort Jackson
Ft. Jackson Co: Richland SC 29207–
Landholding Agency: Army
Property Number: 219820108
Status: Unutilized
Reason: Extensive deterioration

Bldg. J5826
Fort Jackson
Ft. Jackson Co: Richland SC 29207–
Landholding Agency: Army
Property Number: 219820109
Status: Unutilized
Reason: Extensive deterioration

Bldg. F7901
Fort Jackson
Ft. Jackson Co: Richland SC 29207–
Landholding Agency: Army
Property Number: 219820110
Status: Unutilized
Reason: Extensive deterioration

Bldg. 8670
Fort Jackson
Ft. Jackson Co: Richland SC 29207–
Landholding Agency: Army
Property Number: 219820111
Status: Unutilized
Reason: Extensive deterioration

South Dakota

Bldg. 7504
Ellsworth AFB Co: Meade SD 57706–
Landholding Agency: Air Force
Property Number: 189820034

Status: Unutilized
Reason: Within 2000 ft. of flammable or explosive material, Within airport runway clear zone, Secured Area

Bldg. 4001
Ellsworth AFB Co: Meade SD 57706–
Landholding Agency: Air Force
Property Number: 189820035
Status: Unutilized
Reason: Secured Area

Bldg. 7239
Ellsworth AFB Co: Meade SD 57706–
Landholding Agency: Air Force
Property Number: 189820036
Status: Unutilized
Reason: Within 2000 ft. of flammable or explosive material, Within airport runway clear zone, Secured Area

Bldg. 1102
Ellsworth AFB Co: Meade SD 57706–
Landholding Agency: Air Force
Property Number: 189820037
Status: Unutilized
Reason: Secured Area

Bldg. 88307
Ellsworth AFB Co: Meade SD 57706–
Landholding Agency: Air Force
Property Number: 189820038
Status: Unutilized
Reason: Within 2000 ft. of flammable or explosive material, Secured Area

Bldg. 88320
Ellsworth AFB Co: Meade SD 57706–
Landholding Agency: Air Force
Property Number: 189820039
Status: Unutilized
Reason: Within 2000 ft of flammable or explosive material, Secured Area

Tennessee

Bldg. 717
Volunteer AAP
Chattanooga Co: Hamilton TN
Landholding Agency: Army
Property Number: 219820112
Status: Unutilized
Reason: Secured Area, Extensive deterioration

Bldg. 816–2
Volunteer AAP
Chattanooga Co: Hamilton TN
Landholding Agency: Army
Property Number: 219820113
Status: Unutilized
Reason: Secured Area, Extensive deterioration

Bldg. 908–2
Volunteer AAP
Chattanooga Co: Hamilton TN
Landholding Agency: Army
Property Number: 219820114
Status: Unutilized
Reason: Secured Area, Extensive deterioration

Bldg. T–1026
Volunteer AAP
Chattanooga Co: Hamilton TN
Landholding Agency: Army
Property Number: 219820115
Status: Unutilized
Reason: Secured Area, Extensive deterioration

Bldg. T–1027
Volunteer AAP
Chattanooga Co: Hamilton TN
Landholding Agency: Army
Property Number: 219820116
Status: Unutilized
Reason: Secured Area, Extensive deterioration

Bldg. T–1039
Volunteer AAP
Chattanooga Co: Hamilton TN
Landholding Agency: Army
Property Number: 219820117
Status: Unutilized
Reason: Secured Area, Extensive deterioration

Bldg. T–1096
Volunteer AAP
Chattanooga Co: Hamilton TN
Landholding Agency: Army
Property Number: 219820118
Status: Unutilized
Reason: Secured Area, Extensive deterioration

Utah

Bldg. 3102
Deseret Chemical Depot
Tooele UT 84074–
Landholding Agency: Army
Property Number: 219820119
Status: Unutilized
Reason: Secured Area, Extensive deterioration

Bldg. 5145
Deseret Chemical Depot
Tooele UT 84074–
Landholding Agency: Army
Property Number: 219820120
Status: Unutilized
Reason: Secured Area, Extensive deterioration

Bldg. 8030
Deseret Chemical Depot
Tooele UT 84074–
Landholding Agency: Army
Property Number: 219820121
Status: Unutilized
Reason: Secured Area, Extensive deterioration

Vermont

Bldg. 95
Burlington IAP
S. Burlington Co: Chittenden VT
Landholding Agency: Air Force
Property Number: 189820040
Status: Unutilized
Reason: Within 2000 ft. of flammable or explosive material

Bldg. 220
Burlington IAP
S. Burlington Co: Chittenden VT
Landholding Agency: Air Force
Property Number: 189820041
Status: Unutilized
Reason: Secured Area

Bldg. 381
Burlington IAP
S. Burlington Co: Chittenden VT
Landholding Agency: Air Force
Property Number: 189820042
Status: Unutilized
Reason: Secured Area

Bldg. 379
Burlington IAP
S. Burlington Co: Chittenden VT
Landholding Agency: Air Force
Property Number: 189820043
Status: Unutilized
Reason: Secured Area

Virginia

Bldgs. 201, 215, 216
Fort Story
Ft. Story Co: Princess Ann VA 23459–
Landholding Agency: Army
Property Number: 219820122
Status: Unutilized
Reason: Extensive deterioration

Bldgs. 406, 412, 418, 419
Fort Story
Ft. Story Co: Princess Ann VA 23459–
Landholding Agency: Army
Property Number: 219820123
Status: Unutilized
Reason: Extensive deterioration

6 Bldgs.
Fort Story
502, 504, 526, 533, 550, 582
Ft. Story Co: Princess Ann VA 23459–
Landholding Agency: Army
Property Number: 219820124
Status: Unutilized
Reason: Extensive deterioration

7 Bldgs.
Fort Story
803, 832, 921, 1093, 1096, 1105, 1115
Ft. Story Co: Princess Ann VA 23459–
Landholding Agency: Army
Property Number: 219820125
Status: Unutilized
Reason: Extensive deterioration

Bldg. 825
Fort Story
Ft. Story Co: Princess Ann VA 23459–
Landholding Agency: Army
Property Number: 219820126
Status: Unutilized
Reason: Extensive deterioration

Bldg. T–5201
Fort Lee
Ft. Lee Co: Prince George VA 23801–
Landholding Agency: Army
Property Number: 219820127
Status: Unutilized
Reason: Extensive deterioration

Bldg. T–8406
Fort Lee
Ft. Lee Co: Prince George VA 23801–
Landholding Agency: Army
Property Number: 219820128
Status: Unutilized
Reason: Extensive deterioration

Bldg. 3504
Fort Eustis
Ft. Eustis VA 23604–
Landholding Agency: Army
Property Number: 219820129
Status: Unutilized
Reason: Extensive deterioration

Bldgs. 358, 359
Cheatham Annex
Williamsburg VA 23185–
Landholding Agency: Navy
Property Number: 779820023
Status: Excess
Reason: Extensive deterioration

Bldg. CAD–43
Cheatham Annex
Williamsburg VA 23185–
Landholding Agency: Navy
Property Number: 779820024

Status: Excess
Reason: Extensive deterioration

Bldg. CAD–102
Cheatham Annex
Williamsburg VA 23185–
Landholding Agency: Navy
Property Number: 779820025
Status: Excess
Reason: Extensive deterioration

Bldg. CAD–102A
Cheatham Annex
Williamsburg VA 23185–
Landholding Agency: Navy
Property Number: 779820026
Status: Excess
Reason: Extensive deterioration

Bldg. CAD–127
Cheatham Annex
Williamsburg VA 23185–
Landholding Agency: Navy
Property Number: 779820027
Status: Excess
Reason: Extensive deterioration

Washington

Bldg. 5232
Fort Lewis
Ft. Lewis Co: Pierce WA 98433–
Landholding Agency: Army
Property Number: 219820130
Status: Unutilized
Reason: Extensive deterioration

Bldg. 9568
Fort Lewis
Ft. Lewis Co: Pierce WA 98433–
Landholding Agency: Army
Property Number: 219820131
Status: Unutilized
Reason: Extensive deterioration

Bldg. 9650
Fort Lewis
Ft. Lewis Co: Pierce WA 98433–
Landholding Agency: Army
Property Number: 219820132
Status: Unutilized
Reason: Extensive deterioration

Bldg. S–275
Fort Lawton
Seattle Co: King WA 98199–
Landholding Agency: Army
Property Number: 219820133
Status: Unutilized
Reason: Secured Area, Extensive deterioration

Bldgs. S–570, S–571
Fort Lawton
Seattle Co: King WA 98199–
Landholding Agency: Army
Property Number: 219820134
Status: Unutilized
Reason: Secured Area, Extensive deterioration

[FR Doc. 98–13365 Filed 5–21–98; 8:45 am]

BILLING CODE 4210–29–M

DEPARTMENT OF THE INTERIOR

Office of the Assistant Secretary of Water and Science

Central Utah Project Completion Act

Notice of Availability of the Record of Decision on the Provo River Restoration Project Final Environmental Impact Statement documenting the Department of Interior's approval for the Utah Reclamation Mitigation and Conservation Commission to proceed with the construction of the Proposed Action Alternative.

AGENCY: Office of the Assistant Secretary—Water and Science, Department of the Interior.

ACTION: Notice of availability of the Provo River Restoration Project Record of Decision.

SUMMARY: On April 1, 1998, Patricia J. Beneke, Assistant Secretary—Water and Science, Department of the Interior, signed the Record of Decision (ROD) which documents the selection of the Proposed Action Alternative (Riverine Habitat Restoration Alternative) as presented in the Provo River Restoration Project Final Environmental Impact Statement (FEIS), MC FES 97–01, filed December 23, 1997. The ROD approves the Utah Reclamation Mitigation and Conservation Commission (Mitigation Commission) proceeding with construction of the Provo River Restoration Project (PRRP) and authorizes Department of the Interior agencies to assist the Mitigation Commission with this project. The Department of the Interior and the Mitigation Commission served as the Joint Lead Agencies in the preparation of the NEPA compliance documents.

The FEIS for the PRRP considered three action alternatives (including the Proposed Action), as well as the No Action Alternative, for river restoration. The Assistant Secretary determined that the Proposed Action Alternative provides the greatest amount of mitigation and enhancement benefit among all alternatives considered.

Construction of the PRRP will restore a more natural steam channel along about 10 miles of the Provo River between Jordanelle Dam and Deer Creek Reservoir through the Heber Valley in Wasatch County, Utah. The project will fulfill Interior's environmental commitments made in the U.S. Bureau of Reclamation's 1987 Final Supplement to the Final Environmental Impact Statement, Municipal and Industrial System of the Bonneville Unit, Central Utah Project (INT FES 87–8). These commitments are now binding upon the Mitigation Commission. The selected alternative will fulfill the environmental commitments by: acquiring lands in public ownership along the Provo River thereby increasing public access for angling and other low impact recreation, restoring aquatic habitats to increase game fish populations, eliminating fish migration barriers and aquatic habitat impacts currently associated with operating irrigation diversion facilities, and providing public management of newly acquired lands to maximize public recreation benefits.

During preparation of the FEIS, the Mitigation Commission consulted formally on listed species with the U.S. Fish and Wildlife Service (FWS) under section 7 of the Endangered Species Act (16 U.S.C.A. Sections 1531 to 1544, as amended). In a letter dated December 10, 1997, the FWS indicated that the Proposed Action Alternative selected by this ROD is not likely to adversely affect listed or proposed species or designated or proposed critical habitats. Interior and the Mitigation Commission will continue to consult with FWS prior to and during construction to avoid actions that may affect proposed or listed species, or their proposed or designated critical habitat.

FOR FURTHER INFORMATION CONTACT: Additional information on matters related to this **Federal Register** notice can be obtained at the address and telephone number set forth below:

Mr. Ralph G. Swanson, Program Coordinator, CUP Completion Act Office, Department of the Interior, 302 East 1860 South, Provo UT 84606–7317, Telephone: (801) 379–1254.

Dated: April 23, 1998.

Ronald Johnston,

Program Director, Department of the Interior.

[FR Doc. 98–13665 Filed 5–21–98; 8:45 am]

BILLING CODE 4310–RK–P

DEPARTMENT OF THE INTERIOR

Fish and Wildlife Service

Action: Notice of Application for a Natural Gas Pipeline Right-of-Way

SUMMARY: Notice is hereby given that under Section 28 of the Mineral Leasing Act of 1920 (41 Stat. 449:30 U.S.C. 185), as amended by Public Law 93–153, Koch Pipeline Southeast, Inc. has applied to construct, install and maintain a 12-inch pipeline across approximately 2,566.88 feet of the Mississippi Sandhill Crane National Wildlife Refuge in Jackson County, Mississippi and Grand Bay National Wildlife Refuge, Mobile County,

Alabama within the existing corridor described as follows:

Legal Description of Centerline Proposed 50′ Permanent Pipeline Right-of-Way Across Property of United States of America Located in Section 7, T7S, R4W, Jackson County, Mississippi.

Commencing at a point having a Mississippi Coordinate System, East Zone coordinated of X = 1,114,194.65 and Y = 343,696.16, said point being the Point of Beginning; Thence, N 53°37′00″ E a distance of 1,681.58 feet to the Point of termination containing 1,681.58 feet or 101.91 rods.

Commencing at a point having a Mississippi Coordinate System, East Zone coordinated of X = 1,116,172.98 and Y = 345,153.82, said point being the Point of Beginning; Thence, N 53°37′00″ E a distance of 338.18 feet to the Point of termination containing 338.18 feet or 20.50 rods.

Commencing at a point having a Mississippi Coordinate System, East Zone coordinated of X = 1,116,445.24 and Y = 345,354.43, said point being the Point of Beginning; Thence, N 53°37′00″ E a distance of 480.94 feet to the Point of termination containing 480.94 feet or 29.15 rods.

Legal Description of Centerline Proposed 50′ Permanent Pipeline Right-of-Way Across Property of United States of America Located in Section 18, T7S, R4W, Jackson County, Mississippi.

Commencing at a point having a Mississippi Coordinate System, East Zone coordinated of X = 1,111,557.16 and Y = 341,753.08, said point being the Point of Beginning; Thence, N 53°37′16″ E a distance of 506.75 feet to the Point of termination containing 506.75 feet or 155.57 rods.

Legal Description of Centerline Proposed 50′ Permanent Pipeline Right-of-Way Across Property of United States of America Located in Sections 4 & 5, T7S, R4W, Jackson County, Mississippi.

Commencing at a point having a Mississippi Coordinate System, East Zone coordinated of X = 1,120,987.53 and Y = 348,701.42, said point being the Point of Beginning; Thence, N 53°40′49″ E a distance of 8.67 feet to the Point of termination containing 8.67 feet or 0.52 rods.

Legal Description of Centerline Proposed 50′ Permanent Pipeline Right-of-Way Across Property of United States of America Located in Sections 19 & 30, T7S, R4W, Jackson County, Mississippi.

Commencing at a point having a Mississippi Coordinate System, East Zone coordinated of X = 1,080,724.33 and Y = 363,181.92, said point being the Point of Beginning; Thence, N 27°18′18″ W a distance of 2,566.88 feet to the Point of termination containing 2,566.88 feet or 155.57 rods.

Legal Description of Centerline Proposed 50′ Permanent Pipeline Right-of-Way Across Property of United States of America Located in Sections 4 & 5, T7S, R4W, Mobile County, Alabama.

Commencing at a point having a Alabama Coordinate System, West Zone coordinated of X = 1,685,142.20 and Y = 167,740.37, said point being the Point of Beginning; Thence, N 53°40′49″ E a distance of 1,899.22 feet to a point, Thence, along a curve to the right having a radius of 11,670 feet and achord bearing and distance of 59°31′19″ feet to a point; Thence S 59°59′47″ E a distance of 51.41 feet to a point; Thence S 14°59′47″ E a distance of 467.89 feet to a point; Thence, S 47°01′52″ E a distance of 202.22 feet to a Point of termination containing 4,177.23 feet or 253.16 rods.

The land described above contains 11.18 acres, more or less.

The purpose of this notice is to inform the public that the United States Fish and Wildlife Service is correctly considering the merits of approving this application.

DATES: Interested persons desiring to comment on this application should do so on or before June 22, 1998.

ADDRESSES: Comments should be addressed to the Regional Director, U.S. Fish and Wildlife Service, 1875 Century Boulevard, Room 420, Atlanta, Georgia 30345.

Sam D. Hamilton,

Regional Director,

[FR Doc. 98–13675 Filed 5–21–98; 8:45 am]

BILLING CODE 4310–55–M

DEPARTMENT OF THE INTERIOR

Bureau of Land Management

[OR–050–1220–00; GP8–0194]

Closure of Public Lands

AGENCY: Prineville District, Deschutes, Resource Area, Bureau of Land Management, Interior.

ACTION: Notice is hereby given that effective immediately, the Skeleton Fire Area and adjacent lands as legally described below is closed to all motorized vehicle use, except those defined as open roads. The purpose of this closure is to protect wildlife (including critical deer range), vegetation, sensitive soils, watershed resources, areas of high visual quality, and to prevent spread of noxious weeds. Exemptions to this closure will apply to administrative personnel of the Bureau of Land Management. Other exemptions to this closure order may be made on a case by case basis by the authorized officer.

This closure will remain in effect until further notice.

Descriptive Location:

This closure applies to those lands administered by the Bureau of Land Management East of Bend, Oregon, South of Highway 20, and immediately West of the Millican Valley Off-Highway Vehicle Management Area as described in the July 1989 Brothers/LaPine Resource Management Plan (Page 48).

Legal Description

This closure order applies to those lands administered by the Bureau of Land Management within the area of Township 18 south, Range 13 east, Sections 14–36; Township 19 south, Range 13 east, Sections 1–4, 10–14, 24 and 25; Township 18 south, Range 14 east, Sections 30, 31, and 32; Township 19 south, Range 14 east, Sections 3–11, 14–24, 23–27. Seven roads will remain open during the closure period and are described as follows:

—Old Highway 20, Horse Ridge Segment.

—BLM Road 6515 from Old Highway 20 South to Forest Road 2015

—BLM Road 6515–AA from BLM Road 6516, east to Dyer Well.

—Stookey Flat Road, from intersection of Gosney Road and Arnold Market Road in a southeast direction to the intersection with BLM Road 6516.

—Ford Road, a continuation of BLM Road 6516 to the Forest Road 2015.

—Forest Road 2015.

—Forest Road 2015–500 from Forest Road 2015 south to Forest Road 18.

FOR FURTHER INFORMATION CONTACT: The Bureau of Land Management, Prineville District, P.O. Box 550, Prineville Oregon 97754, telephone 541–416–6700.

SUPPLEMENTARY INFORMATION: The authority for this closure is 43 CFR 8341.2 and 43 CFR 8364.1. Violations of this closure order are punishable by a fine not to exceed $1,000 and/or imprisonment not to exceed 12 months as provided in 43 CFR 8360.0–7.

Dated: May 12, 1998.

Danny L. Tippy,

Acting District Manager,

[FR Doc. 98–13657 Filed 5–21–98; 8:45 am]

BILLING CODE 4310–33–M

DEPARTMENT OF THE INTERIOR

Bureau of Land Management

[OR–100–6334–00; GP8–0192]

Notice of Emergency Closure of Public Lands: Douglas County, Oregon

AGENCY: Bureau of Land Management, Roseburg District Office, South River Resource Area.

ACTION: Emergency temporary closure of public lands in Douglas County, Oregon.

SUMMARY: Notice is served that the public lands located along Mitchell Creek, approximately 3 miles southwest of Canyonville, Oregon, are closed to all public uses, including vehicle operation, camping, open fires, shooting, hiking, sightseeing, mining, erecting structures and storing personal property, until July 15, 1998. The purpose of this closure is to minimize disturbance to threatened and endangered species, to protect wildlife and fishery resources and habitats, and to protect soil and water resources.

The lands affected by this closure are more specifically described as:

Willamette Principal Meridian, Douglas County, Oregon

T. 31 S., R. 5 W.,
Sec. 6, Lots 4, 5, 6, 7, those portions of Lot 3, SE¼NW¼, W½SW¼, and SE¼ lying west and south of BLM road 30–5–31.0; except those portions of BLM roads 31–5–6.0 and 31–6–2.0.

Containing approximately 560 acres.

Personnel that are exempt from this closure include any Federal, State, or local officer, or member of any organized rescue or fire-fighting force in the performance of an official duty. BLM roads may also be used under terms of existing easements of record. Additional persons authorized by the BLM South River Area Manager, may be allowed but must be approved in advance in writing.

EFFECTIVE DATES: The closure will become effective immediately and will remain in effect until July 15, 1998.

FOR FURTHER INFORMATION CONTACT: Alan R. Wood, Area Manager, South River Resource Area, 777 NW Garden Valley Blvd., Roseburg, Oregon 97470, (541) 440–4930.

SUPPLEMENTARY INFORMATION: Maps showing the above described area are available at the BLM's Roseburg District Office for public review. The public lands closed under this order will be posted with signs at points of access. This closure is consistent with the Roseburg District Record of Decision and Resource Management Plan (June 1995), which allows for the closure of areas where problems occur.

This temporary closure is to prevent further damage to wildlife and fishery habitats and resources, soil and water resources, and disturbance of threatened and endangered species.

This closure authorized under 43 CFR 8364.1. Any person who fails to comply with the provisions of this closure may be subject to, but not limited to, the penalties provided in 43 CFR 8360.0–7, which include a fine not to exceed $1,000 and/or imprisonment of not to exceed 12 months, as well as the penalties provided under Oregon State law.

Dated: May 13, 1998.

Alan R. Wood,

Area Manager.

[FR Doc. 98–13681 Filed 5–21–98; 8:45 am]

BILLING CODE 4310–33–P

DEPARTMENT OF THE INTERIOR

Bureau of Land Management

[AK–040–96–003; AA–76879, AA–77643, AA–77776, AA–76936, AA–76935, AA–77839]

Management Framework Plans, Etc: Alaska

AGENCY: Bureau of Land Management, Interior.

ACTION: Notice of availability; proposed amendment to the Southwest and Southcentral Management Framework Plans (MFP) in Southwest and Southcentral Alaska.

SUMMARY: The BLM has amended the Southwest and Southcentral MFPs to allow for the sale of public lands needed for church-group related development and to resolve several land occupancy problems. The following described public lands have been examined through the land use planning process and have been found suitable for disposal pursuant to Section 203 of the Federal Land Policy and Management Act of 1976, 43 U.S.C. 1713. Parcel Two of the following described lands is also classified as suitable for lease and sale under the Recreation and Public Purposes Act, as amended, 43 U.S.C. 969.

Parcel One (AA–76879): Seward Meridian, Alaska, T. 20 N., R. 8 E., Sections 23 and 26, containing approximately 80 acres.
Parcel Two (AA–77643): Seward Meridian, Alaska, T. 15 N., R. 1 W., Lot 53, Section 19, containing approximately 1.42 acres.
Parcel Three (AA–77776): Seward Meridian, Alaska, T. 17 N., R. 2 E., Section 26, Lot 22, containing approximately 0.94 acre.
Parcel Four (AA–76396): Kateel River Meridian, Alaska, T. 27 S., R. 22 E., Section 32, containing approximately 45 acres
Parcel Five (AA–76935): Kateel River Meridian, Alaska, T. 27 S., R. 22 E., Section 32, containing approximately 1 acre.
Parcel Six (AA–77839): Seward Meridian, Alaska, T. 2 N., R. 12 W., Sections 21 and 22, containing approximately .72 acre

The above lands contain approximately 129 acres.

FOR FURTHER INFORMATION CONTACT: Robert P. Rinehart, Anchorage Field Office, Bureau of Land Management, 6881 Abbott Loop Rd., Anchorage, Alaska, 99507–2599, (907) 267–1272.

SUPPLEMENTARY INFORMATION: For a period of 30 days from the date this notice is published in the **Federal Register**, any party that participated in the plan amendment and is adversely affected by the amendment, may protest this action in accordance with 43 CFR 1610.5–5 only as it effects issues submitted for the record during the planning process.

Nick Douglas,

Field Manager.

[FR Doc. 98–13677 Filed 5–21–98; 8:45 am]

BILLING CODE 4310–22–P

DEPARTMENT OF THE INTERIOR

[OR–010–1430–00; GP8–0185]

Bureau of Land Management

AGENCY: Lakeview District, Bureau of Land Management, Interior.

ACTION: Notice.

SUMMARY: The South Steens Subcommittee of the Southeast Oregon Resource Advisory Council will meet at the Burns District BLM Office, HC 74–12533 Hwy 20 West, Hines, Oregon 97738, on June 25, 1998, at 8 am and proceed to the South Steens allotment for a field trip. They will reconvene on June 26, 1998, at 8 am at the Burns District BLM Office on June 26, 1998. The purpose of this meeting is to gather information on the proposed projects associated with the Catlow Conservation Agreement.

DATES: June 25, 1998, and June 26, 1998.

FOR FURTHER INFORMATION CONTACT: Sonya Hickman, Bureau of Land Management, Lakeview District Office, P.O. Box 151, Lakeview, OR 97630 (Telephone 541–947–2177).

Steve Ellis,

Lakeview District Manager.

[FR Doc. 98–13754 Filed 5–2–98; 8:45 am]

BILLING CODE 4310–33–M

DEPARTMENT OF THE INTERIOR

Bureau of Land Management

[WY–921–41–5700; WYW102780]

Notice of Proposed Reinstatement of Terminated Oil and Gas Lease

Pursuant to the provisions of 30 U.S.C. 188(d) and (e), and 43 CFR 3108.2–3(a) and (b)(1), a petition for reinstatement of oil and gas lease WYW102780 for lands in Uinta County, Wyoming, was timely filed and was accompanied by all the required rentals accruing from the date of termination.

The lessee has agreed to the amended lease terms for rentals and royalties at rates of $5.00 per acre, or fraction thereof, per year and 16–2/3 percent, respectively.

The lessee has paid the required $500 administrative fee and $125 to reimburse the Department for the cost of this **Federal Register** notice. The lessee has met all the requirements for reinstatement of the lease as set out in Section 31 (d) and (e) of the Mineral Lands Leasing Act of 1920 (30 U.S.C. 188), and the Bureau of Land Management is proposing to reinstate lease WYW102780 effective January 1, 1998, subject to the original terms and conditions of the lease and the increased rental and royalty rates cited above.

Pamela J. Lewis,

Chief, Leasable Minerals Section.

[FR Doc. 98–13678 Filed 5–21–98; 8:45 am]

BILLING CODE 4310–22–P

DEPARTMENT OF THE INTERIOR

Bureau of Land Management

[WY–921–41–5700; WYW104657]

Notice of Proposed Reinstatement of Terminated Oil and Gas Lease

Pursuant to the provisions of 30 U.S.C. 188(d) and (e), and 43 CFR 3108.2–3(a) and (b)(1), a petition for reinstatement of oil and gas lease WYW104657 for lands in Natrona County, Wyoming, was timely filed and was accompanied by all the required rentals accruing from the date of termination. The lessee has agreed to the amended lease terms for rentals and royalties at rates of $5.00 per acre, or fraction thereof, per year and 16⅔ percent, respectively.

The lessee has paid the required $500 administrative fee and $125 to reimburse the Department for the cost of this **Federal Register** notice. The lessee has met all the requirements for reinstatement of the lease as set out in Section 31 (d) and (e) of the Mineral Lands Leasing Act of 1920 (30 U.S.C. 188), and the Bureau of Land Management is proposing to reinstate lease WYW104657 effective June 1, 1997, subject to the original terms and conditions of the lease and the increased rental and royalty rates cited above.

Pamela J. Lewis,

Chief, Leasable Minerals Section.

[FR Doc. 98–13679 Filed 5–21–98; 8:45 am]

BILLING CODE 4310–22–P

DEPARTMENT OF THE INTERIOR

Bureau of Land Management

[NV–930–1430–00; N–57883]

Notice of Realty Action: Lease/ Conveyance for Recreation and Public Purposes

AGENCY: Bureau of Land Management.

ACTION: Recreation and Public Purpose Lease/Conveyance.

SUMMARY: The following described public land in T. 20 S., R. 60 E., section 6, Clark County, Nevada has been examined and found suitable for lease/ conveyance for recreational or public purposes under the provisions of the Recreation and Public Purposes Act, as amended (43 U.S.C. 869 *et seq.*). Clark County proposes to use the land for a public park to include facilities for softball, baseball, volleyball, lawn games, roller hockey, lighted tennis courts, small/large, individual and family/group picnic areas, leisure and fitness areas, streets, roads, utilities and maintenance facilities for the park.

Mount Diablo Meridian, Nevada

T. 20 S., R. 60 E.,

Section 6: E½NW¼SE¼NW¼, SW¼SE¼NW¼,NW¼NE¼SW¼, W½SW¼NE¼SW¼.

Containing 30 acres, more or less.

The land is not required for any federal purpose. The lease/conveyance is consistent with current Bureau planning for this area and would be in the public interest. The lease/patent, when issued, will be subject to the provisions of the Recreation and Public Purposes Act and applicable regulations of the Secretary of the Interior, and will contain the following reservations to the United States:

1. A right-of-way thereon for ditches or canals constructed by the authority of the United States, Act of August 30, 1890 (43 U.S.C. 945).

2. All minerals shall be reserved to the United States, together with the right to prospect for, mine and remove such deposits from the same under applicable law and such regulations as the Secretary of the Interior may prescribe and will be subject to:

3. An easement along the north 30 feet and east 30 feet of the E½ of the NW¼ of the SE¼ of the NW¼ of section 6, T. 20 S., R. 60 E., M.D. M., Clark County, Nevada, together with a spandrel area in the NE¼ corner thereof, concave southwesterly, having a radius of fifteen (15) feet and being tangent to the south line of the north 30 feet of the west line of the east 30 feet.

4. An easement along the east 30 feet of the E½ of the SW¼ of the SE¼ of the NW¼ of section 6, T. 20 S., R. 60 E., M.D. M., Clark County, Nevada.

5. An easement along the east 30 feet of the E½ of the NW¼ of the NW¼ of the SW¼ of section 6, T. 20 S., R. 60 E., M.D. M., Clark County, Nevada.

6. An easement along the south 30 feet of the W½ of the SW¼ of the NW¼ of the SW¼ of section 6, T. 20 S., R. 60 E., M.D. M., Clark County, Nevada.

7. In addition, all road easements identified in the Clark County Master Transportation Plan, until such time as a patent would be issued.

Detailed information concerning this action is available for review at the office of the Bureau of Land Management, Las Vegas District, 4765 W. Vegas Drive, Las Vegas, Nevada.

Upon publication of this notice in the **Federal Register**, the above described land will be segregated from all other forms of appropriation under the public land laws, including the general mining laws, except for lease/conveyance under the Recreation and Public Purposes Act, leasing under the mineral leasing laws and disposal under the mineral material disposal laws. For a period of 45 days from the date of publication of this notice in the **Federal Register**, interested parties may submit comments regarding the proposed lease/ conveyance for classification of the lands to the District Manager, Las Vegas District, 4765 Vegas Drive, Las Vegas, Nevada 89108.

CLASSIFICATION COMMENTS: Interested parties may submit comments involving the suitability of the land for a public park (Lone Mountain). Comments on the classification are restricted to whether the land is physically suited for the proposal, whether the use will maximize the future use or uses of the land, whether the use is consistent with local planning and zoning, or if the use is consistent with State and Federal programs.

APPLICATION COMMENTS: Interested parties may submit comments regarding the specific use proposed in the

application and plan of development, whether the BLM followed proper administrative procedures in reaching the decision, or any other factor not directly related to the suitability of the land for a public park.

Any adverse comments will be reviewed by the State Director. In the absence of any adverse comments, the classification of the land described in this Notice will become effective 60 days from the date of publication in the **Federal Register**. The lands will not be offered for lease/conveyance until after the classification becomes effective.

Dated: May 12, 1998.

Mark R. Chatterton,

Assistant District Manager, Non-Renewable Resources, Las Vegas, NV.

[FR Doc. 98–13756 Filed 5–21–98; 8:45 am]

BILLING CODE 4310–HC–P

DEPARTMENT OF THE INTERIOR

Bureau of Land Management

[NV–050–1610–08]

Notice of Availability of the Proposed Las Vegas Resource Management Plan and Final Environmental Impact Statement

AGENCY: Department of the Interior, Bureau of Land Management.

ACTION: Notice of availability.

SUMMARY: The Proposed Las Vegas Resource Management Plan and Final Environmental Impact Statement (RMP/FEIS) is available to the public for a 30 day protest period.

The Proposed Plan and FEIS has been developed in accordance with the National Environmental Policy Act of 1969 and the Federal Land Policy and Management Act of 1976. This plan is a variation of Alternative E which was presented in the Supplement to the Draft Stateline Resource Management Plan released in May 1994 and as modified by public comment. This document contains a summary of the decisions and resulting impacts, an overview of the planning process and planning issues, the Proposed Plan, a summary of written and verbal comments received during public review of the Draft Plan and Supplement, and responses to the substantive issues raised during the review.

The Proposed Plan may be protested by any person who participated in the planning process, and who has an interest which is or may be, adversely affected by the approval of the Proposed Plan. A protest may raise only those issues which were submitted for the record during the planning process (see 43 Code of Federal Regulations 1610.5–2).

All protests must be written and must be postmarked on or before July 14, 1998 and shall contain the following information:

- The name, mailing address, telephone number, and interest of the person filing the protest.
- A statement of the issue or issues being protested.
- A statement of the part or parts of the document being protested.
- A copy of all documents addressing the issue or issues previously submitted during the planning process by the protesting party, or an indication of the date the issue or issues were discussed for the record.
- A concise statement explaining precisely why the Bureau of Land Management, Nevada State Director's decision is wrong.

Upon resolution of any protests, an Approved Plan and Record of Decision will be issued. The approved Plan/Record of Decision will be mailed to all individuals who participated in this planning process and all other interested publics upon their request.

DATES: All written protests must be postmarked no later than June 19, 1998.

ADDRESSES: Protests must be filed with:

Director, Bureau of Land Management, Attn. Ms. Brenda Williams, Protests Coordinator, WO–210/LS–1075, Department of the Interior, Washington, D.C. 20240.

Copies of the Proposed RMP/FEIS may be obtained from the Las Vegas Field Office, 4765 W. Vegas Drive, Las Vegas, NV 89108.

Public reading copies are available for review at the public libraries of Clark and Nye Counties, all government document repository libraries and at the following BLM locations:

Office of External Affairs, Main Interior Building, Room 5000, 1849 C Street, NW, Washington, DC;

Public Room, Nevada State Office, 1340 Financial Blvd., Reno, NV; and the Las Vegas Field Office at the above address.

FOR FURTHER INFORMATION CONTACT: Jeff Steinmetz, RMP Team Leader, at BLM's Las Vegas Field Office listed above or telephone (702) 647–5097.

Dated: May 15, 1998.

Robert V. Abbey,

State Director, Nevada.

[FR Doc. 98–13753 Filed 5–21–98; 8:45 am]

BILLING CODE 4310–HC–P

DEPARTMENT OF THE INTERIOR

Bureau of Land Management

[CO–956–98–1420–00]

Colorado: Filing of Plats of Survey

May 14, 1998.

The plats of survey of the following described lands will be officially filed in the Colorado State Office, Bureau of Land Management, Lakewood, Colorado, effective 10:00 a.m., May 14, 1998. All inquiries should be sent to the Colorado State Office, Bureau of Land Management, 2850 Youngfield Street, Lakewood, Colorado 80215–7093.

The mineral survey No. 20929, Colorado, known as the Village Bell(e) Mine, in T. 11 N., R.78 W., Sixth Principal Meridian, Colorado, was accepted April 20, 1998.

The mineral survey No. 20930, Colorado, known as the They Change The Law As I Go Lode, in T. 1 N., R. 71 W., Sixth Principal Meridian, Colorado, was accepted April 1, 1997

These mineral surveys were requested by private parties.

The plat representing the dependent resurvey of a portion of the north boundary and a portion of the subdivisional lines with a partial subdivision of section 3, T. 15 S., R. 87 W., Sixth Principal Meridian, Group 1151, Colorado, was accepted April 23, 1998.

The plat representing the dependent resurvey of a portions of the east and north boundaries and subdivisional lines and the subdivision of section 1, T. 2 N., R. 84 W., Sixth Principal Meridian, Group 1170, Colorado, was accepted March 30, 1998.

The plat representing the dependent resurvey of a portion of the subdivisional lines and Tract No. 40 and the subdivision of section 11, T. 2 N., R. 86 W., Sixth Principal Meridian, Group 1170, Colorado, was accepted March 30, 1998.

These surveys were requested by the Forest Service for administrative purposes.

The plat representing the dependent resurvey of portions of the Eighth Standard Parallel North (south boundary), east and west boundaries, subdivisional lines, and the subdivision of certain sections in T. 33 N., R. 10 W., New Mexico Principal Meridian, Group 1064, Colorado, was accepted April 14, 1998.

The plat representing the dependent resurvey of portions of the Eighth Standard Parallel North (south boundary), east and west boundaries, subdivisional lines, and the subdivision of certain sections in T. 33 N., R. 8 W.,

New Mexico Principal Meridian, Group 1137, Colorado, was accepted April 14, 1998.

The plat representing the dependent resurvey of portions of the Eighth Standard Parallel North (S. Bdy.), subdivisional lines, and the subdivision of certain sections in T. 33 N., R. 9 W., New Mexico Principal Meridian, Group 1138, Colorado, was accepted May 5, 1998.

These surveys were requested by the Bureau of Indian Affairs for administrative purposes.

Field notes only for the remonumentation of certain corners in T. 33 N., R. 7 E., New Mexico Principal Meridian, Group 750, Colorado, was accepted April 6, 1998.

Field notes only for the remonumentation of certain corners in T. 37 N., R. 7 E., New Mexico Principal Meridian, Group 750, Colorado, was accepted April 6, 1998.

The plat representing the entire record of the remonumentation of certain corners in T. 51 N., R. 11 E., New Mexico Principal Meridian, Group 750, Colorado, was accepted April 20, 1998.

The plat representing the entire record of the remonumentation of certain corners in T. 51 N., R. 12 E., New Mexico Principal Meridian, Group 750, Colorado, was accepted April 20, 1998.

The plat representing the entire record of the dependent resurvey in T. 5 N., R. 81 W., Sixth Principal Meridian, Group 1115, Colorado, was accepted April 8, 1998.

The plat representing the dependent resurvey of portions of the subdivisional lines and a portion of the metes-and-bounds survey of certain tract lines, and the survey of the subdivision of sections 15 and 22 in T. 1 N., R. 94 W., Sixth Principal Meridian, Group 1131, Colorado, was accepted April 2, 1988.

The plat representing the dependent resurvey of a portion of the subdivisional lines in T. 43 N., R. 6 E., New Mexico Principal Meridian, Group 1140, Colorado, was accepted April 16, 1998.

The plat representing the dependent resurvey of portions of the west boundary and subdivisional lines, and the subdivision of certain sections in T. 1 N., R. 2 W., Ute Principal Meridian, Group 1142, Colorado, was accepted March 30, 1998.

The plat representing the dependent resurvey of portions of the subdivisional lines and the subdivision of section 35 in T. 12 S., R. 103 W., Sixth Principal Meridian, Group 1146, Colorado, was accepted March 30, 1998.

The plat representing the dependent resurvey of portions of the subdivisional lines and the subdivision of sections 10 and 15 in T. 3 N., R. 102 W., Sixth Principal Meridian, Group 1156, Colorado, was accepted March 30, 1998.

The plat representing the entire record of the corrective dependent resurvey to correct the position of Cor. No. 2, Tract 147, also affecting Tracts 94, 143, and 146 and to identify the public land boundaries along the north and east sides Tracts 130A and 147 in T. 1 S., R. 71 W., Sixth Principal Meridian, Group 1167, Colorado, was accepted April 27, 1998.

The plat (in two sheets) representing the entire record of survey, consisting of the dependent resurvey of a portion of the north boundary (Second Standard Parallel South), a portion of the subdivisional lines, a portion of M.S. No. 15803, Two Bit Lode, and the subdivision of section 2 in T. 11 S., R. 80 W., Sixth Principal Meridian, Group 1191, Colorado, was accepted May 6, 1998.

The plat representing the metes-and-bounds survey of a portion of the west right-of-way of Colorado State Highway No. 131 with ties to certain section corners of section 24 in T. 1 S., R. 84 W., Sixth Principal Meridian, Group 1192, Colorado, was accepted May 6, 1998.

The supplemental plat correcting the erroneous depiction of lot 7 and renumbering the area to lot 15 of section 10 in T. 2 S., R. 85 W., Sixth Principal Meridian, Colorado, was accepted April 30, 1998.

The supplemental plat creating new lots 5 and 6 in section 9, T. 1 S., R. 94 W., Sixth Principal Meridian, Colorado, was accepted April 2, 1998.

These plats were requested by BLM for administrative purposes.

Darryl A. Wilson,

Chief Cadastral Surveyor for Colorado.

[FR Doc. 98–13661 Filed 5–21–98; 8:45 am]

BILLING CODE 4310–JB–P

DEPARTMENT OF THE INTERIOR

Bureau of Land Management

[ID–957–1910–00–4573]

Idaho: Filing of Plats of Survey; Idaho

The plat of the following described land was officially filed in the Idaho State Office, Bureau of Land Management, Boise, Idaho, effective 9:00 a.m. May 11, 1998.

The plat representing the dependent resurvey of portions of the Nez Perce Indian Reservation boundary, the East boundary, the subdivisional lines, and of the 1891 meanders of the right bank of the Clearwater River, and the subdivision of section 25, and the survey of lots 15 and 16 in section 25, T. 36 N., R. 5 W., Boise Meridian, Idaho, Group 992, was accepted May 11, 1998.

This survey was executed to meet certain administrative needs of the Bureau of Indian Affairs. All inquiries concerning the surveys of the above described land must be sent to the Chief, Cadastral Survey, Idaho State Office, Bureau of Land Management, 1387 South Vinnell Way, Boise, Idaho, 83709–1657.

Dated: May 11, 1998.

Duane E. Olsen,

Chief Cadastral Surveyor for Idaho.

[FR Doc. 98–13682 Filed 5–21–98; 8:45 am]

BILLING CODE 4310–66–P

DEPARTMENT OF THE INTERIOR

Bureau of Land Management

[ID–957–1430–00]

Idaho: Filing of Plats of Survey; Idaho

The plat of the following described land was officially filed in the Idaho State Office, Bureau of Land Management, Boise, Idaho, effective 9:00 a.m. May 11, 1998.

The plat representing the corrective dependent resurvey of a portion of the subdivisional lines and the dependent resurvey of a portion of the subdivisional lines, and the 1910 meanders of the right bank of the South Fork of the Payette River, the subdivision of section 20, and a metes-and-bounds survey in section 20, T. 9 N., R. 4 E., Boise Meridian, Idaho, Group 995, was accepted May 11, 1998.

This survey was executed to meet certain administrative needs of the Bureau of Land Management. All inquiries concerning the surveys of the above described land must be sent to the Chief, Cadastral Survey, Idaho State Office, Bureau of Land Management, 1387 South Vinnell Way, Boise, Idaho, 83709–1657.

Dated: May 11, 1998.

Duane E. Olsen,

Chief Cadastral Surveyor for Idaho.

[FR Doc. 98–13683 Filed 5–21–98; 8:45 am]

BILLING CODE 4310–66–P

AGENCY FOR INTERNATIONAL DEVELOPMENT

Notice of Meeting

Pursuant to the Federal Advisory Committee Act, notice is hereby given of

a meeting of the Advisory Committee on Voluntary Foreign Aid (ACVFA).

Date: June 10, 1998 (9:00 a.m. to 5:00 p.m.).

Location: Hotel Washington, Washington Room, 15th & Pennsylvania Avenue, N.W., Washington, D.C.

This meeting will focus on creating an initial dialogue on issues related to USAID's results management and reporting system with an emphasis on the needs of various end-users of information and development results.

The meeting is free and open to the public. However, notification by June 18, 1998 through the Advisory Committee Headquarters is required. Persons wishing to attend the meeting must fax their name, organization and phone number to Lisa J. Douglas on (703) 741–0567.

Dated: May 8, 1998.

John Grant,

Advisory Committee on Voluntary Foreign Aid (ACVFA).

[FR Doc. 98–13672 Filed 5–21–98; 8:45 am]

BILLING CODE 6116–01–M

DEPARTMENT OF JUSTICE

National Institute of Justice

[OJP (NIJ)–1178]

RIN 1121–ZB15

Announcement of the Second Meeting of the National Commission on the Future of DNA Evidence

AGENCY: Office of Justice Programs, National Institute of Justice, Justice.

ACTION: Notice of meeting.

SUMMARY: Announcement of the second meeting of the National Commission on the Future of DNA Evidence.

DATES: June 8, 1998, 8:30 AM to 5:00 PM (Central Standard Time).

ADDRESSES: The Renaissance Oak Brook Hotel, 2100 Spring Road, Oak Brook, IL 60521.

FOR FURTHER INFORMATION CONTACT: Christopher H. Asplen, AUSA, Executive Director (202) 616–8123.

Authority

This action is authorized under the Omnibus Crime Control and Safe Streets Act of 1968, §§ 201–03, as amended, 42 U.S.C. 3721–23 (1994).

Background

The purpose of the National Commission on the Future of DNA Evidence is to provide the Attorney General with recommendations on the use of current and future DNA methods, applications and technologies in the operation of the criminal justice system, from the Crime scene to the courtroom. Over the course of its Charter, the Commission will review critical policy issues regarding DNA evidence and provide recommended courses of action to improve its use as a tool of investigation and adjudication in criminal cases.

The Commission will address issues in five specific areas: (1) The use of DNA in post-conviction relief cases, (2) legal concerns including *Daubert* challenges and the scope of discovery in DNA cases, (3) criteria for training and technical assistance for criminal justice professionals involved in the identification, collection and preservation of DNA evidence at the crime scene, (4) essential laboratory capabilities in the face of emerging technologies, and (5) the impact of future technological developments in the use of DNA in the criminal justice system. Each topic will be the focus of the in-depth analysis by separate working groups comprised of prominent professionals who will report back to the Commission.

Jeremy Travis,

Director, National Institute of Justice.

[FR Doc. 98–13757 Filed 5–21–98; 8:45 am]

BILLING CODE 4410–18–P

DEPARTMENT OF LABOR

Employment and Training Administration

[TA–W–34,188 and NAFTA–02140]

Badger Paper Mills, Incorporated Peshtigo, WI; Notice of Affirmative Determination Regarding Application for Reconsideration

By letter of March 27, 1998, the petitioners requested administrative reconsideration of the Department of Labor's Notices of Negative Determination Regarding Eligibility to Apply for Worker Adjustment Assistance (TA–W–34,188) and NAFTA-Transitional Adjustment Assistance (NAFTA–02140) for workers of the subject firm. The TAA and NAFTA–TAA notices were signed on March 2, 1998 and published in the **Federal Register** on March 23, 1998 (63 FR 13878) and (63 FR 13879), respectively.

The petitioners present evidence that the Department's survey of the subject firm's domestic customers was incomplete.

Conclusion

After careful review of the application, I conclude that the claim is of sufficient weight to justify reconsideration of the Department of Labor's prior decision. The application is, therefore, granted.

Signed at Washington, DC, this 8th day of May 1998.

Grant D. Beale,

Acting Director, Office of Trade Adjustment Assistance.

[FR Doc. 98–13707 Filed 5–22–98; 8:45 am]

BILLING CODE 4510–30–M

DEPARTMENT OF LABOR

Employment and Training Administration

[TA–W–32,372]

Eagle-Picher Plastics Division A/K/A Cambridge Industries Huntington, Indiana; Amended Certification Regarding Eligibility to Apply for Worker Adjustment Assistance

In accordance with Section 223 of the Trade Act of 1974 (19 USC 2273) the Department of Labor issued a Notice of Certification Regarding Eligibility to Apply for Worker Adjustment Assistance on July 3, 1996, applicable to workers of Eagle-Picher Plastics Division, located in Huntington, Indiana. The notice was published in the **Federal Register** on August 2, 1996 (61 FR 40454).

At the request of the State agency, the Department reviewed the certification for workers of the subject firm producing reinforced composite engine covers. New information provided by the State agency shows that on July 10, 1997 the subject firm was purchased by Cambridge Industries. Layoffs have continued and the facility is almost closed. Accordingly, some of workers separated from employment at the Huntington plant have had their wages reported under the unemployment insurance (UI) tax account for the Cambridge Industries. Accordingly, the Department is amending the certification to properly reflect this matter.

The intent of the Department's certification is to include all workers of the Eagle-Picher Plastics Division in the Huntington, Indiana plant adversely affected by increased imports.

The amended notice applicable to TA–W–32,372 is hereby issued as follows:

All workers of Eagle-Picher Plastics Division, also known as Champion Industries (as of July 10, 1997), Huntington, Indiana, who became totally or partially separated from employment on or after May 15, 1995 through July 3, 1998, are eligible to apply for adjustment assistance under Section 223 of the Trade Act of 1974.

Signed at Washington, DC. this 8th day of May 1998.

Grant D. Beale,

Acting Director, Office of Trade Adjustment Assistance.

[FR Doc. 98–13703 Filed 5–21–98; 8:45 am]

BILLING CODE 4510–30–M

DEPARTMENT OF LABOR

Employment and Training Administration

[TA–W–34,404, et al.]

Henry I. Siegel Co., Inc., Chic by H.I.S. Division, Saltillo, Tennessee; Amended Certification Regarding Eligibility to Apply for Worker Adjustment Assistance

In accordance with Section 223 of the Trade Act of 1974 (19 U.S.C. 2273) the Department Labor issued a Certification of Eligibility to Apply for Worker Adjustment Assistance on April 29, 1998, applicable to all workers of Henry I. Siegel Co., Inc., Chic By H.I.S. Division located in Saltillo, Tennessee. The notice will be published soon in the **Federal Register.**

At the request of the State agency, the Department reviewed the certification for workers of the subject firm. Information shows that worker separations have occurred at the Gleason, Trezevant and South Fulton, Tennessee plants of Henry I. Siegel Co., Inc. The Gleason and Trezevant, Tennessee plants are expected to close in June 1998 and the South Fulton, Tennessee plant to close in November, 1998. The workers are engaged in the production of men's and women's slacks and jeans.

The intent of the Department's certification is to include all workers of Henry I. Siegel Co., Inc., Chic by H.I.S. who were adversely affected by increased imports. Accordingly, the Department is amending the certification to cover the workers of Henry I. Siegel Co., Inc., Chic by H.I.S. Gleason, Trezevant and South Fulton, Tennessee.

The amended notice applicable to TA–W–34,404 is hereby issued as follows:

All workers of Henry I. Siegel Co., Inc., Chic by H.I.S., Saltillo, Tennessee (TA–W–34,404), Gleason, Tennessee (TA–W–34,404A), Trezevant, Tennessee (TA–W–34,404B) and South Fulton, Tennessee (TA–W–34,404C) who became totally or partially separated from employment on or after March 17, 1997 through April 29, 2000 are eligible to apply for adjustment assistance under Section 223 of the Trade Act of 1974.

Signed at Washington, DC, this 11th day of May, 1998.

Grant D. Beale,

Acting Director, Office of Trade Adjustment Assistance.

[FR Doc. 98–13706 Filed 5–21–98; 8:45 am]

BILLING CODE 4510–30–M

DEPARTMENT OF LABOR

Employment and Training Administration

Investigations Regarding Certifications of Eligibility To Apply For Worker Adjustment Assistance

Petitions have been filed with the Secretary of Labor under Section 221(a) of the Trade Act of 1974 (''the Act'') and are identified in the Appendix to this notice. Upon receipt of these petitions, the Acting Director of the Office of Trade Adjustment Assistance, Employment and Training Administration, has instituted investigations pursuant to section 221(a) of the Act.

The purpose of each of the investigations is to determine whether the workers are eligible to apply for adjustment assistance under Title II, Chapter 2, of the Act. The investigations will further relate, as appropriate, to the determination of the date on which total or partial separations began or threatened to begin and the subdivision of the firm involved.

The petitioners or any other persons showing a substantial interest in the subject matter of the investigations may request a public hearing, provided such request is filed in writing with the Acting Director, Office of Trade Adjustment Assistance, at the address shown below, not later than June 1, 1998.

Interested persons are invited to submit written comments regarding the subject matter of the investigations to the Office of Trade Adjustment Assistance, at the address shown below, not later than June 1, 1998.

The petitions filed in this case are available for inspection at the Office of the Acting Director, Office of Trade Adjustment Assistance, Employment and Training Administration, U.S. Department of Labor, 200 Constitution Avenue, NW, Washington, DC 20210.

Signed at Washington, DC, this 4th day of May, 1998.

Grant D. Beale,

Acting Director, Office of Trade Adjustment Assistance.

APPENDIX

[Petitions Instituted on 05/04/98]

TA–W	Subject Firm (petitioners)	Location	Date of Petition	Product(s)
34,497	Imperial Home Decor Group (Comp)	Ashaway, RI	04/21/98	Wallpaper.
34,498	Kunkle Foundry (USWA)	Andrews, IN	04/13/98	Bronze Casting.
34,499	Federal Mogul Corp (Comp)	Mooresville, IN	04/12/98	Transmission Bearings.
34,500	Celotex Corp (Wrks)	Perth Amboy, NJ	04/22/98	Shingles and Rolls of Roofing Materials.
34,501	U.S. Repeating Arms Co (Comp)	Hingham, MA	04/23/98	Firearms.
34,502	Master Casualwear Corp (Wrks)	Ripley, TN	04/17/98	Men's & Boy's Casual Slacks.
34,503	DRS Ahead Technology, Inc (Comp)	Dassel, MN	04/20/98	Magnetic Tape Heads.
34,504	Sharp Microelectronics (Wrks)	Camas, WA	04/20/98	Liquid Crystal Displays.
34,505	Dade Behring, Inc (Comp)	Miami, FL	04/20/98	Hemostasis Products.
34,506	Lyon Fashion, Inc (Comp)	McAlisterville, PA	04/14/98	Junior and Misses Dresses.
34,507	CSI Services, Inc (Comp)	Martinsville, VA	04/15/98	Yarn.
34,508	Cabletron, Inc (Wrks)	Rochester, NH	04/06/98	Circuit Boards.
34,509	Constar, Inc (Wrks)	City of Industry, CA	03/24/98	Plastic Bottles.
34,510	Apache Corp. (Wrks)	Franklin, LA	04/09/98	Crude Oil and Natural Gas.
34,511	Rayovac Corp (IAMAW)	Madison, WI	04/22/98	Heavy Duty Battery Cells.
34,512	Eaton Corp (Wrks)	Salisbury, MD	04/17/98	Circuit Breakers.
34,513	U.S. Timber Co (Wrks)	Craigmont, ID	04/23/98	Timber Boards.
34,514	Nocona Boot Co (Comp)	Nocona, TX	04/24/98	Western Boots, Shoe Boots.
34,515	Justin Boot Co (Wrks)	Carthage, MO	04/25/98	Boots.

APPENDIX—Continued

[Petitions Instituted on 05/04/98]

TA–W	Subject Firm (petitioners)	Location	Date of Petition	Product(s)
34,516	Sharp Garment Co (Wrks)	Aberdeen, MS	04/23/98	Men's Dress Slacks.
34,517	OBryan Bros., Inc (Wrks)	Leon, IA	04/16/98	Women's Lingerie.
34,518	Gateway Sportswear, Inc (Wrks)	Masontown, PA	04/15/98	Ladies' Pants, Skirts and T-Shirts.
34,519	Raytheon E-Sysems, Inc (Wrks)	Richardson, TX	04/23/98	Electronics for Military.
34,520	Lavalle Mills Underwear (Wrks)	Long Island City, NY	04/16/98	Ladies' Sleepwear.
34,521	Runby Laboratories (Wrks)	Glenview, IL	04/24/98	Generic Pharmaceuticals.

[FR Doc. 98–13701 Filed 5–21–98; 8:45 am]

BILLING CODE 4510–30–M

DEPARTMENT OF LABOR

Employment and Training Administration

[NAFTA–02184 and TA–W–34,248]

Michigan Carton Company, Battle Creek, Michigan; Dismissal of Application for Reconsideration

Pursuant to 29 CFR 90.18(C) an application for administrative reconsideration was filed with the Acting Director of the Office of Trade Adjustment Assistance for workers at Michigan Carton Company, Battle Creek, Michigan. The review indicated that the application contained no new substantial information which would bear importantly on the Department's determination. Therefore, dismissal of the application was issued.

NAFTA–02184 and TA–W–34,246; Michigan Carton Company, Battle Creek, Michigan (May 13, 1998)

Signed at Washington, D.C. this 15th day of May, 1998.

Grant D. Beale,

Acting Director, Office of Trade Adjustment Assistance.

[FR Doc. 98–13704 Filed 5–21–98; 8:45 am]

BILLING CODE 4510–30–M

DEPARTMENT OF LABOR

Employment and Training Administration

Investigations Regarding Certifications of Eligibility to Apply for Worker Adjustment Assistance

Petitions have been filed with the Secretary of Labor under Section 221 (a) of the Trade Act of 1974 (''the Act'') and are identified in the Appendix to this notice. Upon receipt of these petitions, the Acting Director of the Office of Trade Adjustment Assistance, Employment and Training Administration, has instituted investigations pursuant to Section 221 (a) of the Act.

The purpose of each of the investigations is to determine whether the workers are eligible to apply for adjustment assistance under Title II, Chapter 2, of the Act. The investigations will further relate, as appropriate, to the determination of the date on which total or partial separations began or threatened to begin and the subdivision of the firm involved.

The petitioners or any other persons showing a substantial interest in the subject matter of the investigations may request a public hearing, provided such request is filed in writing with the Acting Director, Office of Trade Adjustment Assistance, at the address shown below, not later than June 1, 1998.

Interested persons are invited to submit written comments regarding the subject matter of the investigations to the Acting Director, Office of Trade Adjustment Assistance, at the address shown below, not later than June 1, 1998.

The petitions filed in this case are available for inspection at the Office of the Acting Director, Office of Trade Adjustment Assistance, Employment and Training Administration, U.S. Department of Labor, 200 Constitution Avenue, NW, Washington, DC 20210.

Signed at Washington, DC this 27th day of April, 1998.

Grant D. Beale,

Acting Director, Office of Trade Adjustment Assistance.

APPENDIX

[Petitions instituted on 04/27/98]

TA–W	Subject firm (petitioners)	Location	Date of petition	Product(s)
34,478	Premier Auto Glass (USWA)	Lancaster, OH	04/17/98	Automobile Glass.
34,479	Nabors Drilling, USA (Wkrs)	Williston, ND	04/14/98	Oil Drilling.
34,480	Pennsylvania Textile Corp (Wkrs)	West Hazleton, PA	04/12/98	Dyed and Finished Fabric.
34,481	Renfro Corporation (Wkrs)	Mt. Airy, NC	04/10/98	Ladies' Athletic and Dress Socks.
34,482	American Cemwood Corp (Co.)	Albany, OR	04/14/98	Fibre Cement Roofing.
34,483	Eagle Moulding Co (Co.)	Dorris, CA	04/14/98	Door and Window Trim.
34,484	Raute Wood, Inc. (Wkrs)	Collierville, TN	04/13/98	Machinery for Plywood & OSB Industry.
34,485	Kaufman Footwear (Wkrs)	Dushore, PA	04/15/98	Sorel Winter Boots.
34,486	Fruit of the Loom (Wkrs)	Bowling Green, KY	04/01/98	Apparel.
34,487	Craig Manufacturing (Co.)	New Castle, VA	04/09/98	Ladies' Dresses, Uniforms, Pant Suits.
34,488	Delhi Gas Pipeline (Wkrs)	Woodward, OK	04/05/98	Natural Gas.
34,489	Procter and Gamble (Co.)	Greenville, SC	04/15/98	Pepto-Bismol Stomach Remedy.
34,490	Metex Corporation (Co.)	Edison, NJ	03/01/98	Seals for Automobile Exhaust Systems.
34,491	Kirby Manufacturing (UNITE)	McClure, PA	04/17/98	Men's Boxer Shorts, Pajamas.
34,492	Moog Automotive (Co.)	Batesville, MS	04/17/98	Drive Shafts.

APPENDIX—Continued

[Petitions instituted on 04/27/98]

TA–W	Subject firm (petitioners)	Location	Date of petition	Product(s)
34,493	Warwick Dyeing Corp (Wkrs)	West Warwick, RI	04/17/98	Finish Nylon Fabrics.
34,494	UNDC Wilson Sporting Good (Wkrs)	Algood, TN	04/14/98	Warehouse & Distribution-Sport Clothing.
34,495	Winning Moves (Co.)	Columbia, TN	04/17/98	Children's Outerwear.
34,496	Harnischfeger Corp. (USWA)	West Milwaukee, WI	04/08/98	Mining Shovels, Drag-Lines, Excavators.

[FR Doc. 98–13702 Filed 5–21–98; 8:45 am]

BILLING CODE 4510–30–M

DEPARTMENT OF LABOR

Employment and Training Administration

[TA–W–33,261; et al]

Texas Instruments, Incorporated, Personal Productivity Products, Mobile Computing Business; Temple, Texas; et al; Amended Certification Regarding Eligibility To Apply for Worker Adjustment Assistance

In accordance with Section 223 of the Trade Act of 1974 (19 USC 2273) the Department Labor issued a Certification of Eligibility To Apply for Worker Adjustment Assistance on April 24, 1997, applicable to all workers of Texas Instruments, Incorporated, Personal Productivity Products, Mobile Computing Business, Temple, Texas. The notice was published in the **Federal Register** on May 9, 1997 (62 25659).

At the request of the company, the Department reviewed the certification for workers of the subject firm. Findings show the Department inadvertently omitted from the certification, various support function facilities of the subject firm. These facilities provided administration, designing and marketing services for the production of notebook computers at Texas Instruments. Worker separations began December 1996 and continued through May, 1997 as a result of the company selling its' notebook computer business.

The intent of the Department's certification is to include all workers of Texas Instruments, Incorporated, Personal Productivity Products, Mobile Computing Business adversely affected by increased imports of notebook computers.

The amended notice applciable to TA–W–33,261 is hereby issued as follows:

All workers of Texas Instruments, Incorporated, Personal Productivity Products, Mobile Computing Business, Temple, Texas (TA–W–33,261); and at the various locations cited below, who became totally or partially separated from employment on or after February 18, 1996 through April 26, 1999 are eligible to apply for adjustment assistance under Section 223 of the Trade Act of 1974:

TAW–33,261A Dallas Texas
TAW–33,261B Austin, Texas
TAW–33,261C Waltham, Massachusetts
TAW–33,261D Plymouth Meeting, Pennsylvania
TAW–33,261E Schaumburg, Illinois
TAW–33,261F Norcross, Georgia
TAW–33,261G Tipp City, Ohio
TAW–33,261H New York, New York
TAW–33,261I San Jose, California
TAW–33,261J Irwin, Pennsylvania
TAW–33,261K Chesterfield, Missouri
TAW–33,261L Centreville, Virginia.

Signed at Washington D.C. this 9th day of May, 1998.

Grant D. Beale,

Acting Director, Office of Trade Adjustment Assistance.

[FR Doc. 98–13705 Filed 5–21–98; 8:45 am]

BILLING CODE 4510–30–M

DEPARTMENT OF LABOR

Pension and Welfare Benefits Administration

[Prohibited Transaction Exemption 98–17; Exemption Application No. D–10412]

Grant of Individual Exemption for the Metropolitan Life Insurance Company (MetLife)

AGENCY: Pension and Welfare Benefits Administration, Department of Labor.

ACTION: Notice of technical correction.

On April 22, 1998, the Department published in the **Federal Register** at 63 FR 19955, a notice granting an individual exemption (the Grant Notice) which would permit, effective April 1, 1997, (1) the purchase or retention by an employee benefit plan (the Plan); and (2) the sale or continuation by MetLife or an affiliate, of a synthetic guaranteed investment contract entered into between the Plan and MetLife under which MetLife guarantees certain amounts.

With respect to the information contained in the Grant Notice, the Department notes that there are several typographical errors in the paragraph captioned EFFECTIVE DATE: which appears in the second column of the Grant Notice on page 19956. As currently drafted, the paragraph states that ''If granted, this exemption is effective as of April 1, 1996.'' Because the operative language of the Grant Notice states that the effective date of the exemption is April 1, 1997, the Department believes the captioned paragraph should be revised accordingly as follows:

EFFECTIVE DATE: This exemption is effective as of April 1, 1997.

FOR FURTHER INFORMATION CONTACT: Ms. Jan D. Broady of the Department, telephone (202) 219–8881. (This is not a toll-free number.)

Signed at Washington, D.C., this 18th of May, 1998.

Ivan L. Strasfeld,

Director of Exemption Determinations, Pension and Welfare Benefits Administration, U.S. Department of Labor.

[FR Doc. 98–13745 Filed 5–21–98; 8:45 am]

BILLING CODE 4510–29–P

THE NATIONAL BIPARTISAN COMMISSION ON THE FUTURE OF MEDICARE

Public Meeting

Establishment of the Medicare Commission included in Chapter 3, Section 4021 of the Balanced Budget Act of 1997 Conference Report. The Medicare Commission is charged with holding public meetings and publicizing the date, time and location in the **Federal Register**.

Note: Previously published in **Federal Register**, Friday, May 15, 1998. Notice of Public Meetings to be held on Monday, June 1, 1998 and Tuesday, June 2, 1998 in Washington, DC.

The National Bipartisan Commission on the Future of Medicare will hold public meetings on June 1 and 2, 1998, at the Adams Building, Library of Congress, Room LA–202, located on the second floor of the Adams Bldg., which is located at the corner of Second Street, SE and Pennsylvania Avenue, SE.

Please check the Commission's web site for additional information: http://Medicare.Commission.Gov.

Monday, June 1, 1998, 1:15 PM–5:00 PM, Tentative Agenda: Modeling Task Force Presentation, Commission Discussion of Benefits, Cost and Eligibility Issues

Tuesday, June 2, 1998, 9:00 AM–11:00 AM, Tentative Agenda: Commission Discussion of Management, Administration and Financing Issues

If you have any questions, please contact the Bipartisan Medicare Commission, ph: 202–252–3380.

Authorized for publication in the **Federal Register** by Julie Hasler, Office Manager, National Bipartisan Medicare Commission.

I hereby authorize publication of the Medicare Commission meetings in the **Federal Register**.

Julie Hasler,

Office Manager, National Bipartisan Medicare Commission.

[FR Doc. 98–13904 Filed 5–21–98; 8:45 am]

BILLING CODE 1132–00–M

NATIONAL COUNCIL ON DISABILITY

Establishment of Advisory Committees

SUMMARY: This notice announces the establishment of NCD's International Watch and Technology Watch.

FOR INFORMATION CONTACT: Mark S. Quigley, Public Affairs Specialist, National Council on Disability, 1331 F Street NW., Suite 1050, Washington, DC 20004–1107; 202–272–2004 (voice), 202–272–2074 (TTY), 202–272–2022 (fax), mquigley@ncd.gov (e-mail).

Agency Mission

The National Council on Disability is an independent federal agency composed of 15 members appointed by the President of the United States and confirmed by the U.S. Senate. Its overall purpose is to promote policies, programs, practices, and procedures that guarantee equal opportunity for all people with disabilities, regardless of the nature of severity of the disability; and to empower people with disabilities to achieve economic self-sufficiency, independent living, and inclusion and integration into all aspects of society.

International Watch

The purpose of NCD's International Watch is to share information on international disability issues and to advise NCD's International Committee on developing policy proposals that will advocate for a foreign policy that is consistent with the values and goals of the Americans with Disabilities Act.

Technology Watch

NCD's Technology Watch (Tech Watch) is a community-based, cross-disability consumer task force on technology. Tech Watch provides information to NCD on issues relating to emerging legislation on technology and helps monitor compliance with civil rights legislation, such as Section 508 of the Rehabilitation Act of 1973, as amended.

These committees are necessary to provide advice and recommendations to NCD on international disability issues and technology accessibility for people with disabilities.

We currently have balanced membership representing a variety of disabling conditions from across the United States.

Signed in Washington, DC, on May 18, 1998.

Ethel D. Briggs,

Executive Director.

[FR Doc. 98–13689 Filed 5–21–98; 8:45 am]

BILLING CODE 6820–MA–M

NATIONAL FOUNDATION OF THE ARTS AND THE HUMANITIES

Sunshine Act Meeting of National Museum Services Board

AGENCY: Institute of Museum and Library Services.

ACTION: Notice of meeting.

SUMMARY: This notice sets forth the agenda of a forthcoming meeting of the National Museum Services Board. This notice also describes the function of the board. Notice of this meeting is required under the Government through the Sunshine Act (Public Law 94–409) and regulations of the Institute of Museum and Library Services, 45 CFR 1180.84.

TIME/DATE: 10:30 am–12:30 pm—Friday, June 12, 1998.

STATUS: Open.

ADDRESS: The Madison Hotel, Drawing rooms I and II, 15th and M Streets, NW, Washington, DC 20005, (202) 862–1600.

FOR FURTHER INFORMATION CONTACT: Elizabeth Lyons, Special Assistant to the Director, Institute of Museum and Library Services, 1100 Pennsylvania Avenue, NW, Room 510, Washington, DC 20506, (202) 606–4649.

SUPPLEMENTARY INFORMATION:

The National Museum Services Board is established under the Museum Services Act, Title II of the Arts, Humanities, and Cultural Affairs Act of 1976, Public Law 94–462. The Board has responsibility for the general policies with respect to the powers, duties, and authorities vested in the Institute under the Museum Services Act.

The meeting of Friday, June 12, 1998 will be open to the public. If you need special accommodations due to a disability, please contact; Institute of Museum and Library Services, 1100 Pennsylvania Avenue, NW, Washington, DC 20506—(202) 606–8536—TDD (202) 606–8636 at least seven (7) days prior to the meeting date.

72ND MEETING OF THE NATIONAL MUSEUM SERVICE BOARD, THE MADISON HOTEL, 15TH AND M STREETS, NW, WASHINGTON, DC, 10:30 AM–12:30 PM

Agenda

I. CHAIRMAN'S WELCOME AND APPROVAL OF MINUTES OF THE 71ST NMSB MEETING—JANUARY 27, 1998
II. DIRECTOR'S REPORT
III. LEGISLATIVE/PUBLIC AFFAIRS REPORT
IV. OFFICE OF RESEARCH AND TECHNOLOGY REPORT
V. OFFICE OF MUSEUM SERVICES PROGRAM REPORT
VI. OFFICE OF LIBRARY SERVICES REPORTS
A. STATE PROGRAMS
B. DISCRETIONARY PROGRAMS

Dated: May 15, 1998.

Linda Bell,

Director of Policy, Planning and Budget National Foundation on the Arts and Humanities, Institute of Museum and Library Services.

[FR Doc. 98–13877 Filed 5–20–98; 1:17 pm]

BILLING CODE 7036–01–M

NATIONAL TRANSPORTATION SAFETY BOARD

Agency Recordkeeping/Reporting Requirements Under Emergency Review by the Office of Management and Budget (OMB)

The National Transportation Safety Board has submitted the following (see below) emergency processing public information collection request (ICR) to the Office of Management and Budget (OMB) for review and clearance under the Paperwork Reduction Act of 1995 (Pub. L. 104–13, 44 U.S.C. Chapter 35). OMB approval has been requested by May 27, 1998. A copy of this individual ICR, with applicable supporting documentation, may be obtained by calling the National Transportation Safety Board Departmental Clearance Officer, Larry Crabill (202) 314–6224.

Comments and questions about the ICR listed below should be directed to the Office of Information and Regulatory Affairs, Attn: OMB Desk Officer for the National Transportation Safety Board, Office of Management and Budget, Room 10102, 725 17th Street, N.W., Washington, D.C. 20503.

Agency: National Transportation Safety Board.

Title: Evacuation Safety Study: Passenger Questionnaire.

OMB Number: New.

Frequency: Once.

Affected Public: Individuals.

Number of Respondents: 2000.

Estimated Time Per Respondent: 20 minutes.

Total Burden Hours: 667.

Description: The National Transportation Safety Board is currently conducting a study on emergency evacuation from commercial aircraft. The study will examine the effects on emergency evacuations of the following: (1) Evacuation equipment; (2) different cabin configurations; (3) different cabin and outside environments; (4) evacuation procedures and crew/passenger communications; and (5) passenger age, size, and other bio-behavioral factors. Further, the study will compile general statistics on evacuations, including the number of evacuations and the types and number of passenger injuries incurred during evacuations.

Therefore, the National Transportation Safety Board is seeking emergency clearance to obtain data from passengers who have evacuated from commercial aircraft on their observations of the evacuation and their personal experience during the evacuation.

Dated: May 19, 1998.

Rhonda Underwood,

Federal Register Liaison Officer.

[FR Doc. 98–13752 Filed 5–21–98; 8:45 am]

BILLING CODE 7533–01–M

NUCLEAR REGULATORY COMMISSION

Advisory Committee on Reactor Safeguards; Subcommittee Meeting on Advanced Reactor Designs; Notice of Meeting

The ACRS Subcommittee on Advanced Reactor Designs will hold a meeting on June 17–18, 1998, Room T–2B3, 11545 Rockville Pike, Rockville, Maryland.

The entire meeting will be open to public attendance.

The agenda for the subject meeting shall be as follows:

Wednesday, June 17, 1998—8:30 a.m. until the conclusion of business.

Thursday, June 18, 1998—8:30 a.m. until the conclusion of business.

The Subcommittee will continue its review of the Westinghouse AP600 design. Specifically, the Subcommittee will review the inspections, tests, analyses, and acceptance criteria (ITAAC), the AP600 Level 1 PRA, and the NRC staff's evaluation of Chapters 1, 4, 5, 7, 8, 11, 13, and 18 of the AP600 Standard Safety Analysis Report. The purpose of this meeting is to gather information, analyze relevant issues and facts, and to formulate proposed positions and actions, as appropriate, for deliberation by the full Committee.

Oral statements may be presented by members of the public with the concurrence of the Subcommittee Chairman; written statements will be accepted and made available to the Committee. Electronic recordings will be permitted only during those portions of the meeting that are open to the public, and questions may be asked only by members of the Subcommittee, its consultants, and staff. Persons desiring to make oral statements should notify the cognizant ACRS staff engineer named below five days prior to the meeting, if possible, so that appropriate arrangements can be made.

During the initial portion of the meeting, the Subcommittee, along with any of its consultants who may be present, may exchange preliminary views regarding matters to be considered during the balance of the meeting.

The Subcommittee will then hear presentations by and hold discussions with representatives of the NRC staff, Westinghouse Electric Company, their consultants, and other interested persons regarding this review.

Further information regarding topics to be discussed, whether the meeting has been canceled or rescheduled, and the Chairman's ruling on requests for the opportunity to present oral statements and the time allotted therefor, can be obtained by contacting the cognizant ACRS staff engineer, Mr. Noel F. Dudley (telephone 301/415–6888) between 7:30 a.m. and 4:15 p.m. (EDT). Persons planning to attend this meeting are urged to contact the above named individual one or two working days prior to the meeting to be advised of any potential changes to the agenda, etc., that may have occurred.

Dated: May 18, 1998.

Sam Duraiswamy,

Chief, Nuclear Reactors Branch.

[FR Doc. 98–13710 Filed 5–21–98; 8:45 am]

BILLING CODE 7590–01–P

NUCLEAR REGULATORY COMMISSION

Advisory Committee on Reactor Safeguards; Subcommittee Meeting on Plant Operations; Notice of Meeting

The ACRS Subcommittee on Plant Operations will hold a meeting on June 19, 1998, in Room T–2B3, 11545 Rockville Pike, Rockville, Maryland.

The entire meeting will be open to public attendance.

The agenda for the subject meeting shall be as follows:

Friday, June 19, 1998—8:30 a.m. until the conclusion of business.

The Subcommittee will discuss the proposed changes to 10 CFR 50.59 (Changes, Tests and Experiments), status of resolution of issues identified in the March 24, 1998 Staff Requirements Memorandum related to SECY–97–205, ''Integration and Evaluation of Results From Recent Lessons-Learned Reviews,'' and related matters. The purpose of this meeting is to gather information, analyze relevant issues and facts, and to formulate proposed positions and actions, as appropriate, for deliberation by the full Committee.

Oral statements may be presented by members of the public with the concurrence of the Subcommittee Chairman; written statements will be accepted and made available to the Committee. Electronic recordings will be permitted only during those portions of the meeting that are open to the public, and questions may be asked only by members of the Subcommittee, its consultants, and staff. Persons desiring to make oral statements should notify one of the cognizant ACRS staff engineers named below five days prior to the meeting, if possible, so that appropriate arrangements can be made.

During the initial portion of the meeting, the Subcommittee, along with any of its consultants who may be present, may exchange preliminary views regarding matters to be considered during the balance of the meeting.

The Subcommittee will then hear presentations by and hold discussions with representatives of the NRC staff, and other interested persons regarding this review.

Further information regarding topics to be discussed, whether the meeting has been canceled or rescheduled, and the Chairman's ruling on requests for the opportunity to present oral statements and the time allotted therefor, can be obtained by contacting the cognizant ACRS staff engineers, Mr. Michael T. Markley (telephone 301/

415–6885) or Mr. Amarjit Singh (telephone 301–415–6899) between 7:30 a.m. and 4:15 p.m. (EDT). Persons planning to attend this meeting are urged to contact one of the above named individuals one or two working days prior to the meeting to be advised of any potential changes to the agenda, etc., that may have occurred.

Dated: May 18, 1998.

Sam Duraiswamy,

Chief, Nuclear Reactors Branch.

[FR Doc. 98–13711 Filed 5–21–98; 8:45 am]

BILLING CODE 7590–01–P

NUCLEAR REGULATORY COMMISSION

[Docket No.: 30–01233]

Site Decommissioning Plans Etc: U.S. Army Garrison, Fitzsimons, Aurora Co; Hearing

AGENCY: Nuclear Regulatory Commission.

ACTION: Notice of consideration of amendment request for decommissioning the Department of the Army, U.S. Army Garrison, Fitzsimons, Aurora, Colorado, and Opportunity for a Hearing.

The U.S. Nuclear Regulatory Commission (NRC) is considering issuance of a license amendment to Byproduct Material License No. 05–00046–13, issued to the Department of the Army, U.S. Army Garrison, Fitzsimons (Fitzsimons), to authorize decommissioning of its facilities at Aurora, Colorado.

On June 28, 1996, Fitzsimons ceased principal activities permanently at the Aurora facilities. The licensee has conducted limited decommissioning activities at the Aurora facilities in accordance with the conditions discussed in License No. 05–00046–13. On February 2, 1998, Fitzsimons submitted a site decommissioning plan (SDP) to NRC for review that summarized the decommissioning activities that will be undertaken to remediate the Aurora facilities and release them from radiological controls and licensing restrictions. Radioactive contamination at the Fitzsimons Aurora facilities discussed in the SDP consists of pipes, sinks, bench tops, cabinet drawers, flooring, and fume hood components contaminated with byproduct material resulting from licensed operations that occurred from 1956 until 1996.

The NRC will require the licensee to remediate the Aurora facilities to meet NRC's decommissioning criteria , and during decommissioning activities, maintain effluents and doses within NRC requirements and as low as reasonably achievable.

Prior to approving the decommissioning plan, NRC will have made findings required by the Atomic Energy Act of 1954, as amended, and NRC's regulations. These findings will be documented in a Safety Evaluation Report and an Environmental Assessment. Approval of the SDP will be documented in an amendment to License No. 05–00046–13.

The NRC hereby provides notice that this is a proceeding on an application for amendment of a license falling within the scope of Subpart L ''Informal Hearing Procedures for Adjudication in Materials Licensing Proceedings,'' of NRC's rules and practice for domestic licensing proceedings in 10 CFR Part 2. Pursuant to § 2.1205(a), any person whose interest may be affected by this proceeding may file a request for a hearing in accordance with § 2.1205(d). A request for a hearing must be filed within (30) days of the date of publication of this **Federal Register** notice.

The request for a hearing must be filed with the Office of the Secretary either:

1. By delivery to Secretary, U.S. Nuclear Regulatory Commission, One White Flint North, 11555 Rockville Pike, Rockville, MD 20852–2738, between 7:45 am and 4:15 pm Federal workdays; or

2. By mail or telegram addressed to Secretary, U.S. Nuclear Regulatory Commission, Washington, DC 20555–0001, Attention: Rulemakings and Adjudications Staff.

In addition to meeting other applicable requirements of 10 CFR Part 2 of the NRC's regulations, a request for a hearing filed by a person other than an applicant must describe in detail:

1. The interest of the requester in the proceeding;

2. How that interest may be affected by the results of the proceeding, including the reasons why the requestor should be permitted a hearing, with particular reference to the factors set out in § 2.1205 (h);

3. The requester's areas of concern about the licensing activity that is the subject matter of the proceeding; and

4. The circumstance establishing that the request for a hearing is timely in accordance with § 2.1205 (d).

In accordance with 10 CFR 2.1205 (f), each request for a hearing must also be served, by delivering it personally or by mail, to:

1. The applicant, Department of the Army, U.S. Army Garrison, Fitzsimons, 12101 E. Colfax Avenue, Aurora, Colorado, Attention: MCHG–BC–BC(RPO); and

2. The NRC staff, by delivery to Secretary, U.S. Nuclear Regulatory Commission, One White Flint North, 11555 Rockville Pike, Rockville, MD 20852–2738, between 7:45 am and 4:15 pm Federal workdays, or by mail, addressed to Secretary, U.S. Nuclear Regulatory Commission, Washington, DC 20555–0001, Attention: Rulemakings and Adjudications Staff.

For further details with respect to this action, the SDP is available for inspection at the NRC's Region IV offices at 611 Ryan Plaza Drive, Suite 400, Arlington, TX 76011–8064.

FOR FURTHER INFORMATION CONTACT: Mr. Danny L. Rice, Division of Nuclear Material Safety, U.S. Nuclear Regulatory Commission Region IV, 611 Ryan Plaza Drive, Suite 400, Arlington, TX 76011–8064. Telephone: (817) 860–8151.

Dated at Rockville, Maryland, this 15th day of May 1998.

For the Nuclear Regulatory Commission.

John W. N. Hickey,

[FR Doc. 98–13712 Filed 5–21–98; 8:45 am]

BILLING CODE 7590–01–P

NUCLEAR WASTE TECHNICAL REVIEW BOARD

Meeting

Board meeting: June 24, 1998—Las Vegas, Nevada: Department of Energy (DOE) alternative designs for a potential repository that might be developed at Yucca Mountain in Nevada.

Pursuant to its authority under section 5051 of Public Law 100–203, Nuclear Waste Policy Amendments Act of 1987, the Nuclear Waste Technical Review Board (Board) will hold its summer meeting Wednesday, June 24, 1998, in Las Vegas, Nevada.

The one-day meeting, which is open to the public, will begin at 8:30 a.m. and will focus on efforts being made by the DOE's Office of Civilian Radioactive Waste Management (OCRWM) to develop alternative designs for a proposed repository that might be developed at Yucca Mountain in Nevada. In particular, the Board will hear presentations dealing with enhancements to the OCRWM's base-case repository design, and how, using technologies such as drip shields and ceramic coatings, those enhancements might affect repository performance. The Board also will hear a presentation on the technical basis for OCRWM's choice of specific technical designs to be analyzed in its forthcoming

environmental impact statement for the Yucca Mountain site. A detailed agenda will be available approximately two weeks before the meeting. Call for a copy, or visit the Board's web site at www.nwtrb.gov.

Time has been set aside for the public to comment on the technical issues raised during the meeting. Those wishing to speak are encouraged to sign the ''Public Comment Register'' at the check-in table. A time limit may have to be set on individual remarks, but written comments of any length may be submitted for the record.

The meeting will be held at the Crowne Plaza Hotel, 4225 South Paradise Road, Las Vegas, Nevada 89109; (tel) 702–369–4400; (fax) 702–369–3770. Reservations for accommodations should be made by June 1, 1998. Please mention that you are attending the Nuclear Waste Technical Review Board meeting to receive the preferred rate.

Transcripts of this meeting will be available via e-mail, on computer disk, or on a library-loan basis in paper format from Davonya Barnes, Board staff, beginning July 20, 1998. For further information, contact the Frank Randall, External Affairs, at the Board's offices, at 2300 Clarendon Boulevard, Suite 1300, Arlington, Virginia 22201–3367; (tel) 703–235–4473; (fax) 703–235–4495; (e-mail) info@nwtrb.gov.

The Nuclear Waste Technical Review Board was created by Congress in the Nuclear Waste Policy Amendments Act of 1987 to evaluate the technical and scientific validity of activities undertaken by the Secretary of Energy to manage the disposal of the nation's commercial spent nuclear fuel and defense high-level waste. In the same legislation, Congress directed the Secretary to characterize a site at Yucca Mountain, Nevada, for its suitability as a potential permanent repository for disposing of that waste.

Dated: May 18, 1998.

William Barnard,

Executive Director, Nuclear Waste Technical Review Board.

[FR Doc. 98–13693 Filed 5–21–98; 8:45 am]

BILLING CODE 6820–AM–M

THE PRESIDENT'S COUNCIL ON SUSTAINABLE DEVELOPMENT

The Nineteenth Meeting of the President's Council on Sustainable Development (PCSD) in Washington, DC

SUMMARY: The President's Council on Sustainable Development (PCSD), a Presidential Commission with representation from industry, government, environmental, and Native American organizations, will convene its nineteenth meeting in Washington, D.C. on Thursday, June 4, 1998.

Under its current charter from the Clinton Administration, the Council is (1) continuing to forge consensus on policy, (2) demonstrating implementation, (3) getting the word out about sustainable development, and (4) evaluating progress. The Council will advise the President in four specific areas: domestic implementation of policy options to reduce greenhouse gas emissions, next steps in building the new environmental management system of the 21st century, promoting multi-jurisdictional and community cooperation in metropolitan and rural areas, and policies that foster the United States' leadership role in sustainable development internationally.

At the Council's last meeting in Atlanta, GA on November 20, 1997, the members listened to and questioned invited experts as they presented their views on the possibilities and limitations of new technologies to reduce greenhouse gas emissions. The Council also heard from people in the Atlanta region about ways in which the climate change issues are affecting, and could affect, their lives.

At the June 4th meeting the Council will hear presentations, discuss a wide array of business, and decide on important next steps.

June 4 Public Meeting

9:00 a.m.–12:00 p.m.

- National Town Meetings for a New American Dream. Progress on the goals, vision, audiences, anchor events, and overall planning for this seminal event taking place in Detroit and in communities across America on May 2–5, 1999.
- Benefits and opportunities for community-based greenhouse gas emissions reduction strategies.
- Progress of the Pacific Northwest Regional Council and Metropolitan and Rural Strategies Task Force.

12:00–1:00 p.m.—Lunch

1:00–4:00 p.m.—Public Meeting Continued

- Presentations ''The Importance of Incentives for Early Action on Climate Change''.
- Priority Climate Technologies and Barriers.
- Environmental Management Task Force's ''Proposed Environmental Management Framework''.
- Public Comment.

Public comment period: The Council will seek public comment on the Council's activities to implement the Administration's directive. Public comment will be taken during the substantive sessions as time permits, and during the allotted time for public comment identified in the agenda above. Written comments may be submitted before or during the public meeting. All written and oral comments will become part of the public record.

Specifically, the Council is interested in hearing from the public comments in the following areas:

- The Climate Task Force of the President's Council agreed last fall on the important role of technology in addressing climate change, stating that, ''To protect the climate cost effectively, technology breakthroughs, technology incentives, and the elimination of barriers for the deployment of existing technologies are needed. Broad-based cooperative programs to stimulate markets and develop and disseminate new and existing technology to industrialized and developing countries, must be a high priority.'' What in your view is the most important new technology or class of technologies for reducing greenhouse gas emissions? What are the barriers to their adoption?
- The Climate Task Force of the President's Council agreed last fall on the need for incentives for early action stating that, ''Greenhouse gases have atmospheric lifetimes ranging from decades to over a century, and both the concentration and the rate of increase of these gases in the atmosphere are important factors in determining the risk of climate change. Therefore, policies to reduce emissions of greenhouse gases and other measures to protect the climate should include incentives for early action.'' What key issues must be addressed in any system designed to create early incentives to reduce greenhouse gas emissions'?
- The Council's Charter directs the Council to ''Get the Word Out About Sustainable Development.'' In the context of climate change, what strategies should the Council use to share its consensus views on the climate change issue?
- How can community-based strategies be used to address climate change?
- What are the most interesting innovations now underway in environmental management that are advancing or could advance the economic, environmental and social goals of sustainable development?

The Council's previous recommendations to the President may be found in two reports: Sustainable

America: A New Consensus for Prosperity, Opportunity, and a Healthy Environment for the Future (March 1996) and Building on Consensus: A Progress Report on Sustainable America (January 1997). Copies of both reports can be ordered by calling 1–800–363–3732 or downloaded off the Internet at ''http://www.whitehouse.gov/PCSD''.

Dates/Times: Thursday, June 4, 1998 from 9:00 a.m. to 4:00 p.m.

Place: Ronald Reagan International Trade Center Building, 1300 Pennsylvania Ave., Washington, DC. Enter at main entrance on 14th Street and proceed down stairs or escalator to the open courtyard and follow signs to the event.

Status: Open to the public. Public comments are welcome and may be submitted orally on Thursday June 4 or in writing any time prior to or during the meeting. Please submit written comments prior to the meeting to: PCSD, Public Comments, 730 Jackson Place, NW, Washington, D.C. 20503, or fax to: 202/408–6839, E-mail: ''infopcsd@aol.com''.

Contact: Paul Flaim, Administrative Assistant, at 202/408–5296.

Sign Language Interpreter: Please notify the contact if you will need a sign language interpreter.

Martin A. Spitzer,

Executive Director, President's Council on Sustainable Development.

[FR Doc. 98–13887 Filed 5–20–98; 2:20 pm]

BILLING CODE 3125–01–P

Railroad Retirement Board

Privacy Act of 1974; System of Records

AGENCY: Railroad Retirement Board.

ACTION: Notice of proposed changes to systems of records.

SUMMARY: The purposes of this document are to give notice of 26 non-substantial revisions of existing routine uses in 15 systems of records; to delete one routine use in one system of records; to delete 11 systems of records; and to give notice of several non-substantial changes in other categories for several systems of records.

DATES: The changes are effective as of May 22, 1998.

FOR FURTHER INFORMATION CONTACT: Leroy Blommaert, Privacy Act Officer, Railroad Retirement Board, 844 N. Rush St., Chicago, IL 60611–2092, (312) 751–4548.

SUPPLEMENTARY INFORMATION:

Part I: Minor revisions to existing routine uses

The following 26 existing routine uses in the following 15 systems of records are being revised to better express what information is being disclosed and for what purposes, or to change the name of the organization to which the information can be disclosed due to the renaming of the organization, or to limit the conditions under which the disclosure can be made:

RRB–1 ''n''
RRB–3 ''c''
RRB–5 ''k''
RRB–6 ''b,'' ''c,'' ''i,'' and ''l''
RRB–7 ''e,'' ''h'', and ''o''
RRB–9 ''g''
RRB–12 ''a'' ''a'' and ''b''
RRB–17 ''d''
RRB–19 ''b,'' ''c,'' and ''e''
RRB–20 ''p'
RRB–21 ''c,'' ''d,'' ''j,'' and ''r''
RRB–22 ''w''
RRB–34 ''b''
RRB–42 ''c''
RRB–43 ''a''

These revisions do not constitute new or expanded disclosures.

Part II: Deletion of routine uses

We have deleted routine use ''b'' in System of Records RRB–17 because it is not applicable.

Part III: Deletions of systems of records

The following nine systems of records are being deleted because they no longer meet the definition of ''systems of records'' under the Privacy Act: RRB–13, RRB–14, RRB–15, RRB–23, RRB–35, RRB–38, RRB–39, RRB–40, and RRB–47.

System of records RRB–24 and RRB–25 are being deleted because they are being consolidated into another, renamed system. These two systems are being consolidated into RRB–26.

Part IV: Changes in other categories

System name: We changed the system name for systems RRB–3, RRB–8, RRB–16, and RRB–26, to better express the content of these systems.

System locations: We revised this category for system RRB–3 and RRB–4 to reflect the current location.

Categories of individuals covered by the system: We revised this category for systems RRB–12, RRB–26, RRB–42, and RRB–43 to better or more comprehensively described the individuals covered by the system. None of these revisions reflect new groups of individuals covered by the system.

Categories of records in the system: We revised this category for systems RRB–1, RRB–3, RRB–7, RRB–8, RRB–11, RRB–26, RRB–42, and RRB–43 to correctly or more comprehensively describe the categories of records in these systems. None of the revisions reflect any new categories of records added to the systems.

Storage: We revised this category for systems RRB–4, RRB–8, RRB–18, RRB–19, RRB–21, RRB–26, RRB–43 to reflect current practice or better express the media use.

Safeguards: We revised this category for systems RRB–3, RRB–4, RRB–10, RRB–11, RRB–17, RRB–26, RRB–43 to reflect current practice or better express safeguard procedures.

Retention and disposal: We revised this category for systems RRB–1, RRB–3, RRB–4, RRB–8, RRB–10, RRB–11, RRB–17, RRB–19, RRB–20, RRB–21, RRB–22, RRB–26, RRB–42, RRB–43, and RRB–44 to bring it into conformity with actual practice and approval records disposal schedules.

System manager(s) and notification procedure: Because of organizational changes, we changed the name of the system manager and/or the official to contact in the following systems: RRB–1, RRB–2, RRB–3, RRB–4, RRB–5, RRB–6, RRB–7, RRB–8, RRB–12, RRB–16, RRB–18, RRB–19, RRB–20, RRB–21, RRB–22, RRB–26, RRB–27, and RRB–29.

Record source categories: We revised this category in systems of records RRB–4, RRB–10, RRB–17, RRB–20, and RRB–26 to better or more comprehensively describe the record sources for information in the system.

Part V: Existing systems covered by this document:

RRB–1 Social Security Benefit Vouchering System
RRB–2 Medical Examiner's Index
RRB–3 Medicare Part B
RRB–4 Microfiche of Estimated Annuity, Total Compensation and Residual Amount File
RRB–5 Master File of Railroad Employee's Creditable Compensation
RRB–6 Unemployment Insurance Record File
RRB–7 Applications for Unemployment Benefits and Placement Service Under the Railroad Unemployment Insurance Act
RRB–8 Railroad Retirement Tax Reconciliation System
RRB–9 Protest and Appeals under the Railroad Unemployment Insurance Act
RRB–10 Legal Opinion Files
RRB–11 Files on Concluded Litigation
RRB–12 Railroad Employees' Registration File
RRB–13 Disclosure of Information Files
RRB–14 Freedom of Information Register
RRB–15 Covered Abandoned Railroads
RRB–16 Social Security Administration Summary Earnings File
RRB–17 Appeal Decisions from Initial Denials for Benefits under the Provisions of the Railroad Examining System

RRB–18 Travel and Miscellaneous Voucher Examining System
RRB–19 Payroll Record System
RRB–20 Health Insurance and Supplementary Medical Insurance Enrollment and Premium Payment System (Medicare)
RRB–21 Railroad Unemployment and Sickness Insurance Benefit System
RRB–22 Railroad Retirement Survivor and Pensioner Benefit System
RRB–23 Benefit File of Lump Sum and Residual Awards Under the Railroad Retirement Act
RRB–24 Research Master Record for Lump Sum and Residual Awards Under the Railroad Retirement Act
RRB–25 Research Master Record for Survivor Beneficiaries Under the Railroad Retirement Act
RRB–26 Research Master Record for Retired Railroad Employees and Their Dependents
RRB–27 Railroad Retirement Board-Social Security Administration Financial Interchange System
RRB–29 Railroad Employees' Cumulative Gross Earnings Master File
RRB–34 Employee Personnel Management Files
RRB–35 Employee Skills File
RRB–38 Regional Rail Reorganization Act Reimbursement System
RRB–39 Milwaukee Railroad Restructuring Act Benefit System
RRB–40 Regional Rail Reorganization Act Title VII Benefits
RRB–41 Rock Island Railroad Transition and Employee Assistance Act Benefit System
RRB–42 Uncollectible Benefit Overpayment Accounts
RRB–43 Investigation Files
RRB–44 Employee Test Score File
RRB–47 Motor Vehicle Operator Records.

Dated: May 15, 1998.

By authority of the Board.

Beatrice Ezerski,

Secretary to the Board.

RRB—1

SYSTEM NAME:

Social Security Benefit Vouchering System—RRB.

* * * * *

1. The following sections and paragraph in RRB–1 are revised to read as follows:

CATEGORIES OF RECORDS IN THE SYSTEM:

Name, address, social security number, RRB claim number, type and amount of benefit, suspension and termination information.

* * * * *

ROUTINE USES OF RECORDS MAINTAINED IN THE SYSTEM, INCLUDING CATEGORIES OF USERS AND THE PURPOSES OF SUCH USES:

* * * * *

n. Records may be disclosed in a court proceeding relating to any claims for benefits by the beneficiary under the Railroad Retirement Act and may be disclosed during the course of an administrative appeal to individuals who need the records to prosecute or decide the appeal or to individuals who are requested to provide information relative to an issue involved in the appeal.

* * * * *

RETENTION AND DISPOSAL:

* * * * *

MAGNETIC TAPE:

Tapes are updated at least monthly. For disaster recovery purposes, certain tapes are stored for 12–18 month periods.

* * * * *

SYSTEM MANAGER(S) AND ADDRESS:

Office of Programs—Director of Policy and Systems, Railroad Retirement Board, 844 Rush Street, Chicago, Illinois 60611–2092

* * * * *

NOTIFICATION PROCEDURE:

Requests for information regarding an individual's record should be in writing, including full name, social security number and railroad retirement claim number (if any) of the individual. Before any information about any record will be released, the individual may be required to provide proof of identity, or authorization from the individual to permit release of the information. Such requests should be sent to: Office of Programs—Director of Operations, Railroad Retirement Board, 844 Rush Street, Chicago, Illinois 60611–2092.

* * * * *

RRB–2

SYSTEM NAME:

Medical Examiner's Index.

2. The following sections in RRB–2 are revised to read as follows:

* * * * *

SYSTEM MANAGER(S) AND ADDRESS:

Office of Programs—Director of Policy and Systems, Railroad Retirement Board, 844 Rush Street, Chicago, Illinois 60611–2092.

* * * * *

NOTIFICATION PROCEDURE:

Requests for information regarding an individual's record should be in writing, including full name, social security number and railroad retirement claim number (if any) of the individual. Before any information about any record will be released, the individual may be required to provide proof of identity, or authorization from the individual to permit release of the information. Such requests should be sent to: Office of Programs—Director of Operations, Railroad Retirement Board, 844 Rush Street, Chicago, Illinois 60611–2092.

* * * * *

RRB–3

3. The following sections and paragraph in RRB–3 are revised to read as follows:

SYSTEM NAME:

Medicare, Part B (Supplementary Medical Insurance Payment System—Contracted to a United Health Care Insurance) Company.

* * * * *

SYSTEM LOCATION:

United Health Care Insurance Company, One Tower Square, Hartford, Connecticut 06115

* * * * *

CATEGORIES OF RECORDS IN THE SYSTEM:

Name, health insurance claim number, address, date of birth, telephone number, description of illness and treatment pertaining to claim, indication of other health insurance or medical assistance pertinent to claim, (date(s) and place(s) of physician service, description of medical procedures, services or supplies furnished, nature of illness(es), medical charges, name, address and telephone number of physician, Part B entitlement date, Part B deductible status and amount of payment to beneficiary.

* * * * *

ROUTINE USES OF RECORDS MAINTAINED IN THE SYSTEM, INCLUDING CATEGORIES OF USERS AND THE PURPOSES OF SUCH USES:

* * * * *

c. Records may be disclosed in a court proceeding relating to any claims for benefits by the beneficiary under Title XVIII of the Social Security Act and may be disclosed during the course of an administrative appeal to individuals who need the records to prosecute or decide the appeal or to individuals who are requested to provide information relative to an issue involved in the appeal.

* * * * *

SAFEGUARDS:

The insurance company is bound by the contract set forth by the Railroad Retirement Board which contains specific instructions regarding its responsibility in claim information handled and released. It is also bound by the same regulations regarding

disclosure and security of information as the Board itself.

* * * * *

RETENTION AND DISPOSAL:

Each insurance company office retains material for 27 months. At the end of 27 months the material is sent to the Federal Records Center. After 2 years the Federal Records Center destroys the material.

* * * * *

SYSTEM MANAGER(S) AND ADDRESS:

Office of Programs—Director of Policy and Systems, Railroad Retirement Board, 844 Rush Street, Chicago, Illinois 60611–2092

* * * * *

NOTIFICATION PROCEDURE:

Requests for information regarding an individual's record should be in writing, including full name, social security number and railroad retirement claim number (if any) of the individual. Before any information about any record will be released, the individual may be required to provide proof of identity, or authorization from the individual to permit release of the information. Such requests should be sent to: Office of Programs—Director of Operations, Railroad Retirement Board, 844 Rush Street, Chicago, Illinois 60611–2092.

* * * * *

RRB–4

SYSTEM NAME:

Microfiche of Estimated Annuity, Total Compensation and Residual Amount File.

4. The following sections in RRB–4 are revised to read as follows:

* * * * *

SYSTEM LOCATION:

U.S. Railroad Retirement Board, 844 Rush Street, Chicago, Illinois 60611–2092.

* * * * *

STORAGE:

On-line mainframe system.

* * * * *

SAFEGUARDS:

Only authorized personnel have access to these records. Access is determined by internal computer system security levels.

* * * * *

RETENTION AND DISPOSAL:

A maximum of two sets of MARC records (the current and prior MARC) are maintained on-line with the oldest set deleted when a new MARC is produced.

SYSTEM MANAGER(S) AND ADDRESS:

Office of Programs—Director of Policy and Systems, Railroad Retirement Board, 844 Rush Street, Chicago, Illinois 60611–2092

* * * * *

NOTIFICATION PROCEDURE:

Requests for information regarding an individual's record should be in writing, including full name, social security number and railroad retirement claim number (if any) of the individual. Before any information about any record will be released, the individual may be required to provide proof of identity, or authorization from the individual to permit release of the information. Such requests should be sent to: Office of Programs—Director of Operations, Railroad Retirement Board, 844 Rush Street, Chicago, Illinois 60611–2092.

* * * * *

RECORD SOURCE CATEGORIES:

Information which is secured from the original master records is made available to all authorized headquarters and field service users.

* * * * *

RRB–5

SYSTEM NAME:

Master File of Railroad Employee's Creditable Compensation.

5. The following sections and paragraph in RRB–5 are revised to read as follows:

* * * * *

ROUTINE USES OF RECORDS MAINTAINED IN THE SYSTEM, INCLUDING CATEGORIES OF USERS AND THE PURPOSES OF SUCH USES:

* * * * *

k. Records may be disclosed in a court proceeding relating to any claims for benefits by the beneficiary under the Railroad Retirement Act of Railroad Unemployment Insurance Act and may be disclosed during the course of an administrative appeal to individuals who need the records to prosecute or decide the appeal or to individuals who are requested to provide information relative to an issue involved in the appeal.

* * * * *

SYSTEM MANAGER(S) AND ADDRESS:

Office of Programs—Director of Policy and Systems, Railroad Retirement Board, 844 Rush Street, Chicago, Illinois 60611–2092.

* * * * *

NOTIFICATION PROCEDURE:

Requests for information regarding an individual's record should be in writing, including full name, social security number and railroad retirement claim number (if any) of the individual. Before any information about any record will be released, the individual may be required to provide proof of identity, or authorization from the individual to permit release of the information. Such requests should be sent to: Office of Programs—Assessment & Training, Chief of Employer Service and Training Center, Railroad Retirement Board, 844 Rush Street, Chicago, Illinois 60611–2092.

* * * * *

RRB–6

SYSTEM NAME:

Unemployment Insurance Record File.

6. The following sections and paragraphs in RRB–6 are revised to read as follows:

* * * * *

ROUTINE USES OF RECORDS MAINTAINED IN THE SYSTEM, INCLUDING CATEGORIES OF USERS AND THE PURPOSES OF SUCH USES:

* * * * *

b. Benefit rate, name and address may be referred to the Treasury Department to control for reclamation and return of outstanding benefit payments, to issue benefit payments, reconcile reports of non-delivery, and to insure delivery of payments to the correct address or account of the beneficiary or representative payee.

c. Beneficiary's name, address, payment rate, date and number, plus supporting evidence may be released to the U.S. Postal Service for investigation of alleged forgery or theft of railroad unemployment or sickness benefit payments.

* * * * *

i. The last addresses and employer information may be disclosed to the Department of Health and Human Services in conjunction with the Parent Locator Service.

* * * * *

l. Records may be disclosed in a court proceeding relating to any claims for benefits by the beneficiary under the Railroad Unemployment Insurance Act and may be disclosed during the course of an administrative appeal to individuals who need the records to prosecute or decide the appeal or to individuals who are requested to provide information relative to an issue involved in the appeal.

* * * * *

SYSTEM MANAGER(S) AND ADDRESS:

Office of Programs—Director of Policy and Systems, Railroad Retirement

Board, 844 Rush Street, Chicago, Illinois 60611–2092.

* * * * *

NOTIFICATION PROCEDURE:

Request for information regarding an individual's record should be in writing, including full name, social security number and railroad retirement claim number (if any) of the individual. Before any information about any record will be released, the individual may be required to provide proof of identity, or authorization from the individual to permit release of the information. Such requests should be sent to: Office of Programs—Director of Operations, Railroad Retirement Board, 844 Rush Street, Chicago, Illinois 60611–2092.

* * * * *

RRB–7

SYSTEM NAME:

Application for Unemployment Benefits and Placement Service Under the Railroad Unemployment Insurance Act.

* * * * *

7. The following sections and paragraphs in RRB–7 are revised to read as follows:

CATEGORIES OF RECORDS IN THE SYSTEM:

Name, address, account number, age, sex, education, employer, occupation, rate of pay, reason not working and last day worked, personal interview record, results of investigations.

* * * * *

ROUTINE USES OF RECORDS MAINTAINED IN THE SYSTEM, INCLUDING CATEGORIES OF USERS AND THE PURPOSES OF SUCH USES:

* * * * *

e. Beneficiary identification, entitlement and benefit rate information may be released to the Treasury Department to control for reclamation and return of outstanding benefit payments, to issue benefit payments, reconcile reports of non-delivery and to insure delivery of payment to the correct address or account of the beneficiary or representative payee.

* * * * *

h. The last addresses and employer information may be disclosed to the Department of Health and Human Services in conjunction with the Parent Locator Service.

* * * * *

o. Records may be disclosed in a court proceeding relating to any claims for benefits by the beneficiary under the Railroad Unemployment Insurance Act and may be disclosed during the course of an administrative appeal to individuals who need the records to prosecute or decide the appeal or to individuals who are requested to provide information relative to an issue involved in the appeal.

* * * * *

SYSTEM MANAGER(S) AND ADDRESS:

Office of Programs—Director of Policy and Systems, Railroad Retirement Board, 844 Rush Street, Chicago, Illinois 60611–2092

* * * * *

NOTIFICATION PROCEDURE:

Requests for information regarding an individual's record should be in writing, including full name, social security number and railroad retirement claim number (if any) of the individual. Before any information about any record will be released, the individual may be required to provide proof of identity, or authorization from the individual to permit release of the information. Such requests should be sent to: Office of Programs—Director of Operations, Railroad Retirement Board, 844 Rush Street, Chicago, Illinois 60611–2092.

* * * * *

RRB–8

8. The following sections in RRB–8 are revised to read as follows:

SYSTEM NAME:

Railroad Retirement Reconciliation System (Employee Representatives).

* * * * *

CATOGORIES OF RECORDS IN THE SYSTEM:

Employee representative's quarterly railroad tax return.

* * * * *

STORAGE

Paper.

* * * * *

RETENTION AND DISPOSAL:

Employee's representatives' quarterly tax returns and tax reporting reconciliation file are retained for 6 years and 3 months after the period covered by the records and then are destroyed by shredding.

* * * * *

SYSTEM MANAGER(S) AND ADDRESS:

Chief Financial Officer, U.S. Railroad Retirement Board, 844 Rush Street, Chicago, Illinois 60611–2092

* * * * *

NOTIFICATION PROCEDURE:

Requests for information regarding an individual's record should be in writing addressed to the System Manager identified above, including the full name and social security number. Before information about any record is released, the System Manager may require the individual to provide proof of identity or require the requester of furnish an authorization from the individual to permit release of information.

* * * * *

RRB–9

SYSTEM NAME:

Protest and Appeals Under the Railroad Unemployment Insurance Act.

* * * * *

9. The following paragraph in RRB–9 is revised to read as follows:

ROUTINE USES OF RECORDS MAINTAINED IN THE SYSTEM, INCLUDING CATEGORIES OF USERS AND THE PURPOSES OF SUCH USES:

* * * * *

g. Records may be disclosed in a court proceeding relating to any claims for benefits by the beneficiary under the Railroad Unemployment Insurance Act and may be disclosed during the course of an administrative appeal to individuals who need the records to prosecute or decide the appeal or to individuals who are requested to provide information relative to an issue involved in the appeal.

* * * * *

RRB–10

SYSTEM NAME:

Legal Opinion Files.

* * * * *

10. The following sections in RRB–10 are revised to read as follows:

SAFEGUARDS:

Stored in areas not accessible to the public in offices locked during non-business hours; access to these files is restricted to attorneys and other authorized Board employees.

RETENTION AND DISPOSAL:

Opinions of precedential interest or otherwise of lasting significance, and correspondence related to these opinions, are retained permanently. Opinions of limited significance beyond the particular case, and correspondence related to these opinions, are retained in the individual's claim folder,if any, established under the Railroad Retirement Act. When no folder exists, these opinions, are destroyed 2 years after the date of the last action taken by the Bureau of Law on the matter.

* * * * *

RECORD SOURCE CATEGORIES:

The subject person's authorized representative, other record systems

maintained by the Railroad Retirement Board, employers.

* * * * *

RRB–11

SYSTEM NAME:

Files on Concluded Litigation.

* * * * *

11. The following sections in RRB–11 are revised to read as follows:

CATEGORIES OF RECORDS IN THE SYSTEM:

Legal briefs, reports on legal or factual issues involving copies of subpoenas which may have been issued, copies of any motions filed, transcripts of any dispositions taken, garnishment process, correspondence received and copies of any correspondence released by the Board pertaining to the case, copies of any court rulings, and copies of the final decision in the case.

* * * * *

SAFEGUARDS:

Stored in areas not accessible to the public in offices locked during non-business hours; access to these files is restricted to attorneys and other authorized Board employees.

RETENTION AND DISPOSAL:

Files relating to cases of precedential interest are retained permanently. Files of cases involving routine matters, other than garnishments, are retained for 5 years after the case is closed, then shredded. Files relating to garnishment of benefits are retained until 2 years after the date garnishment terminates, then destroyed.

* * * * *

RRB–12

SYSTEM NAME:

Railroad Employees' Registration File.

* * * * *

12. The following sections and paragraphs in RRB–12 are revised to read as follows:

CATEGORIES OF INDIVIDUALS COVERED BY THE SYSTEM:

Individuals who had any employment for a railroad employer after 1936 who were assigned Social Security Numbers beginning with 700 through 728. (Use of the registration form was discontinued January 1, 1981.)

* * * * *

ROUTINE USES OF RECORDS MAINTAINED IN THE SYSTEM, INCLUDING CATEGORIES OF USERS AND THE PURPOSES OF SUCH USES:

a. Records which consist of name, date and place of birth, social security number, sex, and parents' names may be disclosed to the Social Security Administration to verify social security number and date of birth.

b. Records may be disclosed in a court proceeding relating to any claims for benefits by the beneficiary under the Railroad Retirement Act or Unemployment Insurance Act and may be disclosed during the course of an administrative appeal to individuals who need the records to prosecute or decide the appeal or to individuals who are requested to provide information relative to an issue involved in the appeal.

* * * * *

SYSTEM MANAGER(S) AND ADDRESS:

Office of Programs—Director of Policy and Systems, Railroad Retirement Board, 844 Rush Street, Chicago, Illinois 60611–2092.

* * * * *

NOTIFICATION PROCEDURE:

Requests for information regarding an individual's record should be in writing, including full name, social security number and railroad retirement claim number (if any) of the individual. Before any information about any record will be released, the individual may be required to provide proof of identity, or authorization from the individual to permit release of the information. Such requests should be sent to: Office of Programs—Director of Operations, Railroad Retirement Board, 844 Rush Street, Chicago, Illinois 60611–2092.

* * * * *

RRB–13

SYSTEM NAME:

Disclosure of Information Files.

13. System RRB–13 is removed in its entirety.

RRB–14

SYSTEM NAME:

Freedom of Information Act Register.

14. System RRB–14 is removed in its entirety.

RRB–15

SYSTEM NAME:

Covered Abandoned Railroads.

15. System RRB–15 is removed in its entirety.

RRB–16

16. The following sections in RRB–16 are revised to read as follows:

SYSTEM NAME:

Social Security Administration Master Earnings File.

* * * * *

SYSTEM MANAGER(S) AND ADDRESS:

Office of Programs—Director of Policy and Systems, Railroad Retirement Board, 844 Rush Street, Chicago, Illinois 60611–2092.

* * * * *

NOTIFICATION PROCEDURE:

Requests for information regarding an individual's record should be in writing, including full name, social security number and railroad retirement claim number (if any) of the individual. Before any information about any record will be released, the individual may be required to provide proof of identity, or authorization from the individual to permit release of the information. Such requests should be sent to: Office of Programs—Assessment and Training, Chief of Employer Service and Training Center, Railroad Retirement Board, 844 Rush Street, Chicago, Illinois 60611–2092.

* * * * *

RRB–17

SYSTEM NAME:

Appeal Decisions from Initial Denials for Benefits under the Provisions of the Railroad Retirement Act.

17. The following sections and paragraph in RRB–17 are revised to read as follows:

ROUTINE USES OF THE RECORDS/CONTAINED IN THE SYSTEM, INCLUDING THE CATEGORIES OF USERS AND THE PURPOSES OF SUCH USE:

Paragraph ''b'' is removed in its entirety.

* * * * *

d. Records may be disclosed in a court proceeding relating to any claims for benefits by the beneficiary under the Railroad Retirement Act and may be disclosed during the course of an administrative appeal to individuals who need the records to prosecute or decide the appeal or to individuals who are requested to provide information relative to an issue involved in the appeal.

* * * * *

RETRIEVABILITY:

Claim number or social security number or, in many cases, appellant name.

SAFEGUARDS:

Decisions are limited to review by authorized Board personnel.

RETENTION AND DISPOSAL:

The decisions are retained for a period of 2 years and then destroyed by shredding.

* * * * *

RECORD SOURCE CATEGORIES:

Information furnished by the appellant or his/her authorized representative, information developed by the hearings officer relevant to the appeal, and information contained in other record systems maintained by the Railroad Retirement Board.

* * * * *

RRB–18

SYSTEM NAME:

Travel and Miscellaneous Voucher Examining System.

* * * * *

18. The following sections in RRB–18 are revised to read as follows:

STORAGE:

Paper and Microfiche.

* * * * *

SYSTEM MANAGER(S) AND ADDRESS:

Chief Financial Officer, U.S. Railroad Retirement Board, 844 Rush Street, Chicago, Illinois 60611–2092.

* * * * *

RRB–19

SYSTEM NAME:

Payroll Record System.

* * * * *

19. The following sections and paragraphs in RRB–19 are revised to read as follows:

ROUTINE USES OF RECORDS MAINTAINED IN THE SYSTEM, INCLUDING CATEGORIES OF USERS AND THE PURPOSES OF SUCH USES:

* * * * *

b. Service history including pay, benefits, salary deductions for retirement, and other information necessary may be disclosed to the Office of Personnel Management for use in the computation of civil service annuities and to carry out its Government-wide personnel management functions.

c. Computer payment information may be released to the Department of the Treasury for issuance of salary payments.

* * * * *

e. The last known address and employer information may be released to the Department of Health and Human Services in conjunction with the Parent Locator Service.

* * * * *

STORAGE:

Paper, tape, and microfiche.

* * * * *

RETENTION AND DISPOSAL:

Consolidated pay tapes, first two master tapes, and last two master tapes for each year: Destroyed by erasing 3 years after close of calender year in which prepared. Security record-current check issue tape: Destroyed by erasing when the National Personnel Records Center receives second subsequent document covering same type of document. Paper: Destroyed by shredding after 3 years. Microfiche: Retained until replaced by a new record, usually within 1 year. Obsolete microfiche is destroyed by shredding.

* * * * *

SYSTEMS MANAGER(S) AND ADDRESS:

Chief Financial Officer, U.S. Railroad Retirement Board, 844 Rush Street, Chicago, Illinois 60611–2092.

* * * * *

RRB–20

SYSTEM NAME:

Health Insurance and Supplementary Medical Insurance Enrollment and Premium Payment System (Medicare).

* * * * *

20. The following sections and paragraph in RRB–20 are revised to read as follows:

ROUTINE USE OF RECORD MAINTAINED IN THE SYSTEM, INCLUDING CATEGORIES OF USERS AND THE PURPOSES OF SUCH USES:

* * * * *

p. Records may be disclosed in a court proceeding relating to any claims for benefits by the beneficiary under the Railroad Retirement Act or Social Security Act and may be disclosed during the course of an administrative appeal to individuals who need the records to prosecute or decide the appeal or to individuals who are requested to provide information relative to an issue involved in the appeal.

* * * * *

RETENTION AND DISPOSAL:

* * * * *

MICROFILM:

Originals are kept for 3 years, transferred to the Federal Records Center and destroyed 3 years and 3 months after receipt at the center. One copy is kept 3 years then destroyed by shredding. All other copies are destroyed when 6 months old or no longer needed for administrative use, whichever is sooner.

* * * * *

SYSTEM MANAGER(S) AND ADDRESS:

Office of Programs—Director of Policy and Systems, Railroad Retirement Board, 844 Rush Street, Chicago, Illinois 60611–2092.

* * * * *

NOTIFICATION PROCEDURE:

Requests for information regarding an individual's record should be in writing, including full name, social security number and railroad retirement claim number (if any) of the individual. Before any information about any record will be released, the individual may be required to provide proof of identity, or authorization from the individual to permit release of the information. Such requests should be sent to: Office of Programs—Director of Operations, Railroad Retirement Board, 844 Rush Street, Chicago, Illinois 60611–2092.

* * * * *

RECORD SOURCE CATEGORIES:

Applicant (the qualified railroad beneficiary), his/her representative, Social Security Administration, Health Care Financing Administration, United Health Care Insurance Company, Federal, State, or local agencies, their party premium payers, all other Railroad Retirement Board files, physicians.

* * * * *

RRB–21

SYSTEM NAME:

Railroad Unemployment and Sickness Insurance Benefit System.

* * * * *

21. The following sections and paragraphs in RRB–21 are revised to read as follows:

ROUTINE USES OF RECORDS MAINTAINED IN THE SYSTEM, INCLUDING CATEGORIES OF USERS AND THE PURPOSES OF SUCH USES:

* * * * *

c. Beneficiary identifying information, address, check rate, date and number may be released to the Treasury Department to control for reclamation and return outstanding benefit payments, to issue benefit payments, respond to reports of non-delivery, and to insure delivery of payments to the correct address or account of the beneficiary or representative payee.

d. Beneficiary identifying information, address, payment rate, date and number, plus other necessary supporting evidence may be released to the U.S. Postal Service for investigation of alleged forgery or theft of railroad unemployment/sickness benefit payments.

* * * * *

j. The last addresses and employer information may be released to the Department of Health and Human Services in conjunction with the Parent Locator Service.

* * * * *

r. Records may be disclosed in a court proceeding relating to any claims for benefits by the beneficiary under the Railroad Unemployment Insurance Act and may be disclosed during the course of an administrative appeal to individuals who need the records to prosecute or decide the appeal or to individuals who are requested to provide information relative to an issue involved in the appeal.

* * * * *

STORAGE:

Paper, magnetic and optical media, and microforms.

* * * * *

RETENTION AND DISPOSAL:

Paper—Transferred to the Chicago Federal Records Center 1 year after the end of the benefit year during which the case was closed and then destroyed 6 years and 3 months after the end of the benefit year. In benefit recovery cases, the file is transferred to the Federal Records Center if there has been no recent activity; the file is not destroyed until 6 years and 3 months after recovery has been completed or waived. Magnetic tape—Destroyed 10 years after the end of the benefit year. Microform—Destroyed 10 years after the end of the benefit year. Optical media—Destroyed 10 years after the end of the benefit year.

* * * * *

SYSTEM MANAGER(S) AND ADDRESS:

Office of Programs—Director of Policy and Systems, Railroad Retirement Board, 844 Rush Street, Chicago, Illinois 60611–2092.

* * * * *

NOTIFICATION PROCEDURE:

Requests for information regarding an individual's record should be in writing, including full name, social security number and railroad retirement claim number (if any) of the individual. Before any information about any record will be released, the individual may be required to provide proof of identify, or authorization from the individual to permit release of the information. Such requests should be sent to: Office of Programs—Director of Operations, Railroad Retirement Board, 844 Rush Street, Chicago, Illinois 60611–2092.

* * * * *

RRB–22

SYSTEM NAME:

Railroad Retirement Survivor and Pensioner Benefit System.

* * * * *

22. The following sections and paragraph in RRB–22 are revised to read as follows:

ROUTINE USES OF RECORDS MAINTAINED IN THE SYSTEM, INCLUDING CATEGORIES OF USERS AND THE PURPOSES OF SUCH USES:

* * * * *

w. Records may be disclosed in a court proceeding relating to any claims for benefits by the beneficiary under the Railroad Retirement Act and may be disclosed during the course of an administrative appeal to individuals who need the records to prosecute or decide the appeal or to individuals who are requested to provide information relative to an issue involved in the appeal.

* * * * *

RETENTION AND DISPOSAL:

Paper—Individual claim folders with records of all actions pertaining to the payment of claims are transferred to the Federal Records Center, Chicago, Illinois, 5 years after the date of last payment or denial activity if all benefits have been paid, no future eligibility is apparent and no erroneous payments are outstanding. The claim folder is destroyed 25 years after the date it is received in the center. Account receivable listings and checkwriting operations daily activity listings are transferred to the Federal Records Center 1 year after the date of issue and are destroyed 6 years and 3 months after receipt at the center. Other paper listings are destroyed 1 year after the date of issue. Change of address source documents are transferred to the Federal Records Center 6 months after date of completion and are destroyed 4 years and 6 months after receipt at the center. Microforms—Originals are kept for 3 years, transferred to the Federal Records Center, and destroyed 3 years and 3 months after receipt at the center. One duplicate copy is kept 2 years and destroyed by shredding. All other duplicate copies are kept 1 year and destroyed by shredding. Magnetic tape—Magnetic tape records are used to daily update the disk file, are retained for 90 days and then written over. For disaster recovery purposes certain tapes are stored for 12–18 months. Magnetic disk—Continually updated and permanently retained.

* * * * *

SYSTEM MANAGER(S) AND ADDRESS:

Office of Programs—Director of Policy and Systems, Railroad Retirement Board, 844 Rush Street, Chicago, Illinois 60611–2092

* * * * *

NOTIFICATION PROCEDURE:

Requests for information regarding an individual's records should be in writing, including full name, social security number and railroad retirement claim number (if any) of the individual. Before any information about any record will be released, the individual may be required to provide proof of identify, or authorization from the individual to permit release of the information. Such requests should be sent to: Office of Programs—Director of Operations, Railroad Retirement Board, 844 Rush Street, Chicago, Illinois 60611–2092.

* * * * *

RRB–23

SYSTEM NAME:

Four Percent Wage History of Railroad Workers.

23. System RRB–23 is removed in its entirety.

RRB–24

SYSTEM NAME:

Research Master Record for Lump Sum and Residential Awards Under the Railroad Retirement Act.

24. System RRB–24 is removed in its entirety.

RRB–25

SYSTEM NAME:

Research Master Record for Survivor Beneficiaries Under the Railroad Retirement Act.

25. System RRB–25 is removed in its entirety.

* * * * *

RRB–26

26. The following sections in RRB–26 are revised to read as follows:

SYSTEM NAME:

Payment, Rate and Entitlement History File.

* * * * *

CATEGORIES OF INDIVIDUALS COVERED BY THE SYSTEM:

Individuals who have received or are receiving benefits under the Railroad Retirement Act or the Social Security Act. These individuals include retired and disabled railroad employees, their qualified spouses, dependents, and survivors, and recipients of other, non-recurring benefits.

CATEGORIES OF RECORDS IN THE SYSTEM:

Data supporting the benefits and historical data recording the benefits paid to the above categories of individuals under the Railroad Retirement and Social Security Acts.

* * * * *

STORAGE:

Magnetic tape and magnetic disk.

RETRIEVABILITY:

By claim number or beneficiary's Social Security number.

SAFEGUARDS:

Access is limited to authorized personnel only.

RETENTION AND DISPOSAL:

Magnetic tapes are retained for 2 years then written over; magnetic disk files are retained permanently.

SYSTEM MANAGER(S) AND ADDRESS:

Supervisory Statistical Officer, Bureau of Information Services, Information Management Division, U.S. Railroad Retirement Board, 844 Rush Street, Chicago, Illinois 60611–2092.

* * * * *

RECORD SOURCE CATEGORIES:

Transmissions from the following computerized systems: Railroad Retirement Act benefit payment; Social Security benefit payment; disability rating decisions; and primary insurance amount calculations.

* * * * *

RRB–27

SYSTEM NAME:

Railroad Retirement Board—Social Security Administration Financial Interchange System.

* * * *

27. The following section in RRB–27 is revised to read as follows:

SYSTEM MANAGER(S) AND ADDRESS:

Chief Actuary, U.S. Railroad Retirement Board, 844 N. Rush Street, Chicago, Illinois 60611–2092

* * * * *

RRB–29

SYSTEM NAME:

Railroad Employees' Cumulative Gross Earnings Master File.

* * * * *

28. The following section in RRB–29 is revised to read as follows:

SYSTEM MANAGER(S) AND ADDRESS:

Chief Actuary, U.S. Railroad Retirement Board, 844 N. Rush Street, Chicago, Illinois 60611–2092.

* * * * *

RRB–34

SYSTEM NAME:

Employee Personnel Management Files.

* * * * *

29. The following paragraph in RRB–34 is revised to read as follows:

ROUTINE USES OF RECORDS MAINTAINED IN THE SYSTEM, INCLUDING CATEGORIES OF USERS AND THE PURPOSES OF SUCH USES:

* * * * *

b. Records may be disclosed in a court proceeding and may be disclosed during the course of an administrative appeal to individuals who need the records to prosecute or decide the appeal or to individuals who are requested to provide information relative to an issue involved in the appeal.

* * * * *

RRB–35

SYSTEM NAME:

Employee Skills File.

30. System RRB–35 is removed in its entirety.

* * * * *

RRB–38

SYSTEM NAME:

Regional Rail Reorganization Act Reimbursement System.

31. System RRB–38 is removed in its entirety.

RRB–39

SYSTEM NAME:

Milwaukee Railroad Restructuring Act Benefit System.

32. System RRB–39 is removed in its entirety.

RRB–40

SYSTEM NAME:

Regional Rail Reorganization Act Title VII Benefits.

33. System RRB–40 is removed in its entirety.

RRB–41

SYSTEM NAME:

Rock Island Railroad Transition and Employee Assistance Act Benefit System.

34. System RRB–41 is removed in its entirety.

* * * * *

RRB–42

SYSTEM NAME:

Uncollectible Benefit Overpayment Accounts.

* * * * *

35. The following sections and paragraph in RRB–42 are revised to read as follows:

CATEGORIES OF INDIVIDUALS COVERED BY THE SYSTEM:

Individuals who were overpaid in the benefits they received from the Railroad Retirement Board and whose overpayment amounts have been determined uncollectible after normal recovery efforts have been made. Benefits overpaid are further delineated in the following five categories.

—Individuals receiving the following types of annuities, payable under the Railroad Retirement Act: Railroad retirement, disability, supplemental, and survivor.

—Individuals receiving unemployment or sickness insurance benefits payable under the Railroad Unemployment Insurance Act.

—Individuals receiving benefits under section 701 of the Regional Rail Reorganization Act of 1973.

CATEGORIES OF RECORDS IN THE SYSTEM:

Name, address, Social Security number, Railroad Retirement claim number, type of benefit previously paid, amount of overpayment determined to be uncollectible, amount of interest and penalties assessed and collected, name and address of debt collection agency or Federal agency to which uncollectible account is referred for collection, date of such referral, amount collected, and name and address of consumer reporting agencies to which debt information is disclosed and date of such referral.

AUTHORITY FOR MAINTENANCE OF THE SYSTEM:

Section 7(b)(6) of the Railroad Retirement Act of 1974 (45 U.S.C. 231f(b)(6), sec. 12(1) of the Railroad Unemployment Insurance Act (45 U.S.C. 362(1); Pub. L. 97–92, Joint Resolution; Pub. L. 97–365 (Debt Collection Act of 1982); Federal Claims Collection Act (31 U.S.C. 3701 *et. seq.*).

ROUTINE USES OF RECORDS MAINTAINED IN THE SYSTEM, INCLUDING CATEGORIES OF USERS AND THE PURPOSES OF SUCH USES:

* * * * *

c. For information related to uncollectible overpayments of benefits paid under section 701 of the Regional Rail Reorganization of 1973, in the event that this system of records, maintained by the Railroad Retirement Board to carry out its functions, indicates a violation or potential violation of law, whether civil, criminal or regulatory in nature, and whether arising by general statute or particular program statute, or by regulation, rule or order issued thereto, the relevant records in the system of records may be referred, as a routine use, to the appropriate agency, whether Federal, State, local or foreign, charged with the responsibility of investigating or prosecuting such violation or charged with enforcing or implementing the statute, rule,

regulation or order issued pursuant thereto; for information related to uncollectible overpayments paid under any other Act administered by the Railroad Retirement Board, in the event this system of records maintained by the Railroad Retirement Board to carry out its functions indicates a violation or potential violation of law, whether civil, criminal, or regulatory in nature, whether arising by general statute or particular program statute, or by regulation, rule or order issued pursuant thereto, the relevant records may be referred, as a routine use, to the appropriate agency, whether Federal, State, local or foreign, charged with the responsibility of investigating or prosecuting such violation or charged with enforcing or implementing the statute, rule, regulation or order issued pursuant thereto, provided that disclosure would be to an agency engaged in functions related to the Railroad Retirement Act, or the Railroad Unemployment Insurance Act or provided that disclosure would be clearly in the furtherance of the interest of the subject individual.

* * * * *

RETENTION AND DISPOSAL:

Records of uncollectible accounts are maintained in an on-line eletronic database, they remain in the database until the debt is recovered, written off, or waived. Most paper document that are not immediately shredded are filed in claim folders that are covered by Privacy Act Systems of Records RRB–21, Railroad Unemployment and Sickness Insurance Benefit System, or RRB–22, Railroad Retirement, Survivor, and Pensioner Benefit System. These paper documents are mostly correspondence. Paper documents that relate to multiple accounts are kept for 6 years in folders established for the purpose.

* * * * *

RRB–43

SYSTEM NAME:

Investigation Files.

* * * * *

36. The following sections and paragraph in RRB–43 are revised to read as follows:

CATEGORIES OF INDIVIDUALS COVERED BY THE SYSTEM:

Any of the following categories of individuals on whom a complaint is made alleging a violation of law, regulation, or rule pertinent to the administrartion of programs by the RRB, or, with respect to RRB employees, alleging misconduct or conflict of interest in the discharge of their official duties: Current and former employees of the Railroad Retirement Board; contractors; subcontractors; consultants; applicants for, and current and former recipients of, benefits under the programs administered by the Railroad Retirement Board; officials and agents of railroad employers; members of the public who are alleged to have stolen or unlawfully received RRB benefits or salary or assisted in such activity; and others who furnish information, products, or services to the RRB.

CATEGORIES OF RECORDS IN THE SYSTEM:

Letters, memoranda, and other documents alleging a violation of law, regulation or rule, or alleging misconduct, or conflict of interest; reports of investigations to resolve allegations with related exhibits, statements, affidavits or records obtained during the investigation; recommendations on actions to be taken; transcripts of, and documentation concerning requests and approval for, consensual telephone monitoring; reports from law enforcement bodies; prior criminal or noncriminal records as they relate to the investigation; reports of actions taken by management personnel regarding misconduct; reports of legal actions resulting from violations referred to the Department of Justice or other law enforcement agencies for prosecution.

* * * * *

ROUTINE USES OF RECORDS MAINTAINED IN THE SYSTEM, INCLUDING CATEGORIES OF USERS AND THE PURPOSES OF SUCH USES:

a. Records may be disclosed to the Department of Justice or other law enforcement authorities in connection with actual or potential criminal prosecution or civil litigation initiated by the RRB, or in connection with requests by RRB for legal advice.

* * * * *

STORAGE:

Paper and electronic media.

* * * * *

SAFEGUARDS:

General access is restricted to the Inspector General and members of his staff; disclosure with the agency is on a limited need-to-know basis; records are maintained in locked file cabinets.

RETENTION AND DISPOSAL:

Paper files are retained for 10 years before they are destroyed by shredding.

* * * * *

RRB–44

SYSTEM NAME: Employee Test Score File.

* * * * *

37. The following section in RRB–44 is revised to read as follows:

RETENTION AND DISPOSAL

Records are kept for 3 years then destroyed by shredding.

* * * * *

RRB–47

SYSTEM NAME: MOTOR VEHICLE OPERATOR RECORDS.

38. System RRB–47 is removed in its entirety.

[FR Doc. 98–13655 Filed 5–21–98; 8:45 am]

BILLING CODE 7905–01–M

SECURITIES AND EXCHANGE COMMISSION

Proposed Collection; Comment Request

Upon Written Request, Copies Available From: Securities and Exchange Commission, Office of Filings and, Information Services, Washington, DC 20549.

Extension:
Rule 17f–1(g), SEC File No. 270–30, OMB Control No. 3235–0290

Notice is hereby given that pursuant to the Paperwork Reduction Act of 1995 (44 U.S.C. 3501 *et seq.*), the Securities and Exchange Commission (''Commission'') is soliciting comments on the collection of information summarized below. The Commission plans to submit this existing collection of information to the Office of Management and Budget for extension and approval.

• Rule 17f–1(g) Requirements for reporting and inquiring with respect to missing, lost, counterfeit or stolen securities.

Paragraph (g) of Rule 17f–1 requires that all reporting institutions (i.e., every national securities exchange, member thereof, registered securities association, broker, dealer, municipal securities dealer, registered transfer agent, registered clearing agency, participant therein, member of the Federal Reserve System and bank insured by the FDIC) maintain and preserved a number of documents related to their participation in the Lost and Stolen Securities Program (''Program'') under Rule 17f–1. The following documents must be kept in an easily accessible place for three years, according to paragraph (g): (a) copies or all reports of theft or loss (Form X–17F–1A) filed with the

Commission's designee; (b) all agreements between reporting institutions regarding registration in the Program or other aspects of Rule 17f–1; and (c) all confirmations or other information received from the Commission or its designee as a result of inquiry.

Reporting institutions utilize these records and reports (a) to report missing, lost, stolen or counterfeit securities to the data base, (b) to confirm inquiry of the data base, and (c) to demonstrate compliance with Rule 17f–1. The Commission and the reporting institutions' examining authorities utilize these records to monitor the incidence of thefts and losses incurred by reporting institutions and to determine compliance with Rule 17f–1. If such records were not retained by reporting institutions, compliance with Rule 17f–1 could not be monitored effectively.

The Commission estimates that there are 24,518 reporting institutions (respondents) and, on average, each respondent would need to retain 33 records annually, with each retention requiring approximately 1 minute (33 minutes or .55 hours). The total estimated annual burden is 13,484.9 hours (24,518×.55 hours =13,484.9). Assuming an average hourly cost for clerical work of $10, the average total yearly record retention cost for each respondent would be $5.50. Based on these estimates, the total annual cost for the estimated 24,518 reporting institutions would be approximately $134,849.

Written comments are invited on: (a) Whether the proposed collection of information is necessary for the proper performance of the functions of the agency, including whether the information shall have practical utility; (b) the accuracy of the agency's estimates of the burden of the proposed collection of information; (c) ways to enhance the quality, utility, and clarity of the information to be collected; and (d) ways to minimize the burden of the collection of information on respondents, including through the use of automated collection techniques or other forms of information technology. Consideration will be given to comments and suggestions submitted in writing on or before July 21, 1998.

Please direct your written comments to Michael E. Bartell, Associate Executive Director, Office of Information Technology, Securities and Exchange Commission, 450 5th Street, NW, Washington, DC 20549.

Dated: May 14, 1997.

Margaret H. McFarland,

Deputy Secretary.

[FR Doc. 98–13725 Filed 5–21–98; 8:45 am]

BILLING CODE 8010–01–M

SECURITIES AND EXCHANGE COMMISSION

Submission for OMB Review; Comment Request

Upon Written Request, Copies Available From: Securities and Exchange Commission Office of Filings and Information Services Washington, DC 20549

Extension:

Rule 15Ba2–1 and Form MSD, SEC File No. 270–88, OMB Control No. 3235–0083

Notice is hereby given that pursuant to the Paperwork Reduction Act of 1995 (44 U.S.C. 3501 *et seq.*), the Securities and Exchange Commission (''Commission'') has submitted to the Office of Management and Budget a request for approval of extension on the following:

Rule 15Ba2–1 under the Securities Exchange Act of 1934 provides that an application for registration with the Commission by a bank municipal securities dealer must be filed on Form MSD.

The staff estimates that approximately 40 respondents will utilize this application procedure annually, with a total burden of 60 hours. The staff estimates that the average number of hours necessary to comply with the requirements of Rule 15Ba2–1 is 1.5 hours. The average cost per hour is approximately $40. Therefore, the total cost of compliance for the respondents is $2,400.

Providing the information on the application is mandatory in order to register with the Commission as a bank municipal securities dealer. The information contained in the application will not be confidential. An agency may not conduct or sponsor, and a person is not required to respond to a collection of information unless it displays a currently valid control number.

General comments regarding the estimated burden hours should be directed to the following persons: (i) Desk Officer for the Securities and Exchange Commission, Office of Information and Regulatory Affairs, Office of Management and Budget, Room 3208, New Executive Office Building, Washington, D.C. 20503; and (ii) Michael E. Bartell, Associate Executive Director, Office of Information Technology, Securities and Exchange Commission, 450 Fifth Street, N.W., Washington, D.C. 20549. Comments must be submitted to OMB within 30 days of this notice.

Dated: May 15, 1998.

Margaret H. McFarland,

Deputy Secretary.

[FR Doc. 98–13726 Filed 5–21–98; 8:45 am]

BILLING CODE 8010–01–M

SECURITIES AND EXCHANGE COMMISSION

[Investment Company Act Release No. 23188]

Armada Funds, et al.; Notice of Application

May 15, 1998.

AGENCY: Securities and Exchange Commission (''SEC'').

ACTION: Notice of application for exemption under section 6(c) of the Investment Company Act of 1940 (the ''Act'') from section 15(a) of the Act.

SUMMARY OF APPLICATION: Applicants, Armada Funds (the ''Fund'') and National Asset Management Corporation (the ''Adviser''), request an order permitting the implementation, without prior shareholder approval, of new investment advisory agreements (the ''New Agreements'') between the Fund and the Adviser in connection with a change in control of the Adviser. The order would cover a period beginning on the date the requested order is issued until the date the New Agreements are approved or disapproved by the Fund's shareholders (but in no event later than July 6, 1998) (''Interim Period''). The order also would permit the Adviser to receive all fees earned under the New Agreement during the Interim Period following shareholder approval.

FILING DATES: The application was filed on April 3, 1998 and amended on May 13, 1998.

HEARING OR NOTIFICATION OF HEARING: An order granting the application will be issued unless the SEC orders a hearing. Interested persons may request a hearing by writing to the SEC's Secretary and serving Applicants with a copy of the request, personally or by mail. Hearing requests should be received by the SEC by 5:30 p.m. on June 4, 1998, and should be accompanied by proof of service on Applicants in the form of an affidavit or, for lawyers, a certificate of service. Hearing requests should state the nature of the writer's interest, the reason for the request, and the issues contested. Persons who wish to be notified of a

hearing may request notification by writing to the SEC's Secretary.

ADDRESSES: Secretary, SEC, 450 Fifth Street, NW., Washington, DC 20549. Fund, One Freedom Valley Drive, Oaks, Pennsylvania 19456. Adviser, 101 South Fifth Street, Louisville, Kentucky 40402.

FOR FURTHER INFORMATION CONTACT: Shirley A. Bodden, Paralegal Specialist, at (202) 942–0575, or Edward P. Macdonald, Branch Chief, at (202) 942–0564 (Office of Investment Company Regulation, Division of Investment Management).

SUPPLEMENTARY INFORMATION: The following is a summary of the application. The complete application may be obtained for a fee at the SEC's Public Reference Branch, 450 Fifth Street, NW., Washington, DC 20549 (tel. 202–942–8090).

Applicants' Representations

1. The Fund is a Massachusetts business trust registered under the Act as an open-end management investment company. The Adviser is an investment adviser registered under the Investment Advisers Act of 1940. The Adviser manages three portfolios of the Fund under two investment advisory agreements with the Fund (''Prior Agreements'').

2. On March 6, 1998, National City Corporation (''NCC'') sold all of the Adviser's outstanding stock to the Adviser's principal management team (the ''Transaction''). Applicants state that the Transaction resulted in an assignment of the Prior Agreements. Applicants request an exemption: (i) To permit the implementation, without prior shareholder approval, of the New Agreements; and (ii) to permit the Adviser to receive from the Fund all fees earned under the New Agreements during the Interim Period if, and to the extent, the New Agreements are approved by the Fund's shareholders.[1]

3. On March 6, 1998, the Fund's board of trustees (the ''Board''), including a majority of the trustees who are not interested persons of the Fund within the meaning of section 2(a)(19) of the Act (''Independent Trustees''), met in-person and approved the New Agreements. The New Agreements are identical in substance to the Prior Agreements except for their effective and termination dates and certain escrow provisions as described below. Proxy materials to vote on the New Agreements are expected to be mailed to the Fund's shareholders on or about May 18, 1998. The requisite shareholder meetings are expected to take place on or about June 29, 1998.

4. Applicants have entered into an escrow arrangement with an unaffiliated financial institution (''Escrow Agent''). The fees payable to the Adviser under the New Agreements during the Interim Period will be paid into an interest-bearing escrow account maintained by the Escrow Agent. The amounts in the escrow account (including interest earned on such paid fees) will be paid to the Adviser only if the Fund's shareholders approve the New Agreements. If the Interim Period has ended and the Fund's shareholders have failed to approve the New Agreements, the Escrow Agent will pay to the Fund the escrow amounts (including any interest earned). Before the release of any escrow amounts, the Independent Trustees will be notified.

Applicant's Legal Analysis

1. Section 15(a) of the Act provides, in pertinent part, that it shall be unlawful for any person to serve or act as an investment adviser of a registered investment company, except pursuant to a written contract that has been approved by the vote of a majority of the outstanding voting securities of such registered investment company. Section 15(a) of the Act further requires that such written contract provide for automatic termination in the event of its ''assignment.'' Section 2(a)(4) of the Act defines ''assignment'' to include any direct or indirect transfer of a contract by the assignor, or of a controlling block of the assignor's outstanding voting securities by a security holder of the assignor.

2. Applicants state that, upon completion of the Transaction, control of the Adviser was transferred to the Adviser's principal management team. Accordingly, the Transaction resulted in an assignment of the Prior Agreements and thus their automatic termination.

3. Rule 15a–4 provides in pertinent part, that if an investment advisory contract with an investment company is terminated by an assignment in which the adviser does not directly or indirectly receive a benefit, the adviser may continue to act as such for the company for 120 days under a written contract that has not been approved by the company's shareholders, provided that: (a) The new contract is approved by that company's board of directors (including a majority of directors who are not interested persons of the company); (b) the compensation to be paid under the new contract does not exceed the compensation that would have been paid under the contract most recently approved by the company's shareholders; and (c) neither the adviser or any controlling person of the adviser ''directly or indirectly receives money or other benefit'' in connection with the assignment. Applicants state that they cannot rely on rule 15a–4 because of the benefits the Adviser will receive from the Transaction.

4. Section 6(c) provides that the SEC may exempt any person, security, or transaction from any provision of the Act, if and to the extent that such exemption is necessary or appropriate in the public interest and consistent with the protection of investors and the purposes fairly intended by the policy and provisions of the Act. Applicants submit that the requested relief meets this standard.

5. Applicants submit that the timing of the Transaction arose primarily out of business considerations unrelated to the Fund and did not reasonably present an opportunity to secure prior approval of the New Agreements by the Fund's shareholders. Applicants state that the requested relief would permit the continuity of investment management for the Fund, without interruption, during the period following the issuance of the requested order.

6. Applicants submit that the scope and quality of investment advisory services provided to the Fund during the Interim Period will not be diminished. During the Interim Period, the Adviser will operate under the New Agreements, which will be substantively the same as the Prior Agreements, except for their effective and termination dates and escrow provisions. Applicants are not aware of any material changes in the personnel that will provide investment management services during the Interim Period. Accordingly, the Fund should receive, during the Interim Period, the same investment advisory services, provided in the same manner, as the Fund received before the Transaction.

7. Applicants assert that to deprive the Adviser of fees during the Interim Period would be a harsh result and an unreasonable penalty to attach to the Transaction and would serve no useful purpose. Applicants submit that the fees payable to the Adviser under the New Agreements during the Interim Period will be maintained in an interest-bearing escrow account by the Escrow Agent. Such fees will not be released by the Escrow Agent to the Adviser without notice to the Independent

[1] The Adviser has continued to serve as investment adviser to the Fund since the Transaction in a manner consistent with its fiduciary duty to the Fund even though the Fund's shareholders have not approved the New Agreements. Applicants acknowledge that the Fund may be required to pay, with respect to the period until receipt of the order, no more than the actual out-of-pocket cost to the Adviser for providing advisory services to the Fund.

Trustees and appropriate certifications that the New Agreements have been approved by the Funds' shareholders.

Applicants' Conditions

Applicants agree as conditions to the issuance of the exemptive order requested by the application that:

1. The New Agreements will have the same terms and conditions as the Prior Agreements, except for their effective and termination dates and escrow provisions.

2. Fees earned by the Adviser in respect of the New Agreements during the Interim Period will be maintained in an interest-bearing escrow account, and amounts in the account (including interest earned on such paid fees) will be paid: (a) To the Adviser in accordance with the New Agreements, after the requisite shareholder approval is obtained; or (b) to the Fund portfolio which paid the fees, in the absence of shareholder approval with respect to the Fund portfolio.

3. The Fund will hold a meeting of shareholders to vote on approval of the New Agreements on or before the 120th day following the termination of the Prior Agreements (but in no event later than July 6 1998).

4. The Adviser will bear the costs of preparing and filing the application and the costs relating to the solicitation of shareholder approval of the New Agreement necessitated by the Transaction.

5. The Adviser will take all appropriate steps so that the scope and quality of advisory and other services provided to the Fund during the Interim Period will be at least equivalent, in the judgment of the Board, including a majority of the Independent Trustees, to the scope and quality of services previously provided. In the event of any material change in the personnel providing services pursuant to the New Agreements, the Adviser will apprise and consult with the Board to assure that the Trustees, including a majority of the Independent Trustees, are satisfied that the services provided will not be diminished in scope or quality.

For the Commission, by the Division of Investment Management, pursuant to delegated authority.

Jonathan G. Katz,

Secretary.

[FR Doc. 98–13647 Filed 5–21–98; 8:45 am]

BILLING CODE 8010–01–M

SECURITIES AND EXCHANGE COMMISSION

[Investment Company Act Release No. 23189; 812–10972]

General American Investors Company, Inc.; Notice of Application

May 15, 1998.

AGENCY: Securities and Exchange Commission (''SEC'').

ACTION: Notice of application for an exemption under section 6(c) of the Investment Company Act of 1940 (the ''Act'') from section 19(b) of the Act and rule 19b–1 under the Act.

SUMMARY OF APPLICATION: Applicant, General American Investors Company, Inc., requests an order to permit it to make periodic distributions of net long-term capital gains in any one taxable year, so long as applicant maintains in effect a distribution policy with respect to its preferred stock calling for periodic dividends in an amount equal to a specified percentage of the liquidation preference of the preferred stock.

FILING DATES: The application was filed on January 16, 1998 and amended on April 29, 1998.

HEARING OR NOTIFICATION OF HEARING: An order granting the application will be issued unless the SEC orders a hearing. Interested persons may request a hearing by writing to the SEC's Secretary and serving applicant with a copy of the request, personally or by mail. Hearing requests should be received by the SEC by 5:30 p.m. on June 9, 1998, and should be accompanied by proof of service on applicant in the form of an affidavit or, for lawyers, a certificate of service. Hearing requests should state the nature of the writer's interest, the reason for the request, and the issues contested. Persons who wish to be notified of a hearing may request notification by writing to the SEC's Secretary.

ADDRESSES: Secretary, SEC, 450 Fifth Street, NW., Washington, DC 20549. Applicant: General American Investors Company, Inc., 450 Lexington Avenue, New York, New York 10017.

FOR FURTHER INFORMATION CONTACT: Edward P. Macdonald, Branch Chief, at (202) 942–0564 (Office of Investment Company Regulation, Division of Investment Management).

SUPPLEMENTARY INFORMATION: The following is a summary of the application. The complete application may be obtained for a fee at the SEC's Public Reference Branch, 450 Fifth Street, NW., Washington, DC 20549 (tel. 202–942–8090).

Applicant's Representations

1. Applicant is registered under the Act as an internally-managed closed-end management investment company organized as a Delaware corporation. Applicant's board of directors has authorized it to issue and sell cumulative preferred stock. Applicant's investment objective is long term capital appreciation.

2. Applicant wishes to institute a dividend payment policy with respect to its cumulative preferred stock, and any future preferred stock, to be issued by applicant calling for periodic dividends in an amount equal to a specified percentage of the liquidation preference of applicant's preferred stock (''Distribution Policy''). The specified percentage may be determined at the time the preferred stock is initially issued, pursuant to periodic remarketings or auctions, or otherwise. Under the requested relief, the periodic payments may include long-term capital gains so long as applicant maintains in effect the Distribution Policy.

Applicant's Legal Analysis

1. Section 19(b) of the Act provides that a registered investment company may not in contravention of such rules, regulations, or orders as the SEC may prescribe, distribute long-term capital gains more often than once every twelve months. Rule 19b–1 under the Act limits the number of capital gains distributions, as defined in section 851(b)(3)(C) of the Internal Revenue Code of 1986, as amended (the ''Code''), that applicant may make with respect to any one taxable year to one, plus a supplemental distribution made pursuant to section 855 of the Code not exceeding 10% of the total amount distributed for the year, plus one additional net long-term capital gains distribution made in whole or in part to avoid the excise tax under section 4982 of the Code.

2. Applicant argues that rule 19b–1 may prevent the normal operation of the Distribution Policy whenever applicant's realized net long-term capital gains in any year exceed the total of the periodic distributions that under rule 19b–1 may include capital gains. In that situation, applicant asserts that rule 19b–1 effectively forces the distributions that under rule 19b–1 may not include these capital gains to be treated as a return of capital to stockholders, even though net long-term capital gains would otherwise be available. Applicant further states that federal tax rules require that current earnings and profits be allocated proportionately among all distributions

made for that year. The net long-term capital gains in excess of the periodic distributions permitted by rule 19b–1 then must either be added to one of the permitted capital gains distributions resulting in the total distributions for the year in excess of the amount required to be paid, added to a permitted distribution of long-term capital gains on the common stock, or retained by applicant (with applicant paying taxes on those amounts). Accordingly, applicant states that the requested relief would permit it to operate the Distribution Policy with respect to the preferred stock without these unintended adverse consequences.

3. Applicant asserts that its requested relief does not give rise to the concerns underlying section 19(b) of the Act and rule 19b–1. One of these concerns was that stockholders might not be able to distinguish between frequent distributions of capital gains and dividends from investment income. Applicant states that in the case of preferred stock there is little chance for investor confusion since all an investor expects to receive is the specified distribution for any particular dividend period, and no more. Moreover, in accordance with rule 19a–1 under the Act, a separate statement showing the sources of the distribution will accompany each periodic dividend, with a statement provided near the end of the last dividend period in a year indicating the sources (*i.e.*, net investment income and short-term capital gains, net long-term capital gains and return of capital) of each distribution that was made during the year. In addition, applicant notes that the amount and sources of distributions received during the year will be included on applicant's IRS Form 1099–DIV report sent to stockholders who received distributions during the year. This information will also be included in applicant's annual report to stockholders.

4. Applicant submits that another concern underlying section 19(b) and rule 19b–1, was that frequent capital gains distributions could facilitate improper fund distribution practices, including the practice of urging an investor to purchase shares on the basis of an upcoming dividend (''selling the dividend''), where the dividend results in an immediate corresponding reduction in net asset value and is in effect a return of the investor's capital. Applicant believes that this concern does not apply to preferred stock which entitles a holder to a specified periodic dividend and no more and, like a debt security, is initially sold at a price based on its liquidation preference plus an amount equal to any accumulated dividends. Applicant also states that this concern does not arise with regard to closed-end investment companies which do not continuously distribute their shares.

5. Section 6(c) of the Act provides that the SEC may exempt any person, security, or transaction from any provision of the Act, or from any rule thereunder, if such exemption is necessary or appropriate in the public interest and consistent with the protection of investors and the purposes fairly intended by the policy and provisions of the Act. For the reasons stated above, applicant believes that the requested exemption from section 19(b) of the Act and rule 19b–1, meets the standards set forth in section 6(c) of the Act.

For the Commission, by the Division of Investment Management, pursuant to delegated authority.

Jonathan G. Katz,

Secretary.

[FR Doc. 98–13646 Filed 5–21–98; 8:45 am]

BILLING CODE 8010–01–M

SECURITIES AND EXCHANGE COMMISSION

[Release No. 34–39995; File No. SR–PCX–98–17]

Self-Regulatory Organizations; Notice of Filing of Proposed Rule Change by the Pacific Exchange, Inc. Relating to Expansion of the LMM Book Pilot Program

May 15, 1998.

Pursuant to Section 19(b)(1) of the Securities Exchange Act of 1934 (''Act'')[1] and Rule 19b–4 thereunder,[2] notice is hereby given that on April 16, 1998, the Pacific Exchange, Inc. (''PCX'' or ''Exchange'') filed with the Securities and Exchange Commission (''Commission'' or ''SEC'') the proposed rule change as described in Items I, II and III below, which Items have been prepared by the self-regulatory organization.[3] The Commission is published this notice to solicit comments on the proposed rule change from interested persons.

I. Self-Regulatory Organization's Statement of the Terms of Substance of the Proposed Rule Change

The PCX is proposing to remove the current cap on the number of LMMs who may participate in the program.[4]

II. Self-Regulatory Organization's Statement of the Purpose of, and Statutory Basis for, the Proposed Rule Change

In its filing with the Commission, the self-regulatory organization included statements concerning the purpose of and basis for the proposed rule change and discussed any comments it received on the proposed rule change. The text of these statements may be examined at the places specified in Item IV below. The self-regulatory organization has prepared summaries, set forth in sections A, B, and C below, of the most significant aspects of such statements.

A. Self-Regulatory Organization's Statement of the Purpose of, and Statutory Basis for, the Proposed Rule Change

Purpose

On October 11, 1997, the Commission approved an Exchange proposal to adopt a one-year pilot program under which a limited number of LMMs would be able to assume operational responsibility for the options public limit order book (''Book'') in certain option issues.[5] On September 22, 1997, the Commission approved an Exchange proposal to extend the program for one year, so that it is currently set to expire on October 12, 1998.[6]

Under the pilot program, approved LMMs manage the Book function, take responsibility for trading disputes and errors, set rates for Book execution, and pay the Exchange a fee for systems and services.[7] Currently, both multiply-listed and non-multiply-listed option

---

[1] 15 U.S.C. 78s(b)(1).

[2] 17 CFR 240.19b–4 (1991).

[3] The Exchange had initially submitted the filing prior to April 16, 1998, but that submission did not include a signature page. By letter dated April 14, 1998, the Exchange filed Amendment No. 1 to the filing, which contained signatures for the filing. *See* Letter from Michael D. Pierson, Senior Attorney, Regulatory Policy, PCX, to Marie D'Aguanno Ito, Special Counsel, Division of Market Regulation, Commission, dated April 14, 1998.

[4] On May 1, 1998, PCX submitted Amendment No. 2 to the filing, seeking to withdraw the portion of the filing that proposed removing the limit on the number of option issues that may be included in the LMM program. The PCX represented in the Amendment that such proposal would be submitted in a separate filing. See Letter from Michael D. Pierson, Senior Attorney, Regulatory Policy, to Marie D'Aguanno Ito, Special Counsel, Division of Market Regulation, Commission, dated April 30, 1998.

[5] See Exchange Act Release No. 37810 (October 11, 1996), 61 FR 54481 (October 18, 1997) (approving File No. SR–PSE–96–09).

[6] See Exchange Act Release No. 39106 (September 22, 1997), 62 FR 31172 (September 30, 1997).

[7] See Exchange Act Release No. 37874 (October 28, 1996), 61 FR 56597 (November 1, 1996) (approving SR–PSE–96–38, establishing a staffing charge for LMMs who participate in the pilot program); see also File No. SR–PCX–98–03 (proposal to modify the LMM Book Pilot staffing charge).

issues are eligible to be traded under the pilot program.[8] Initially, the program was limited by allowing no more than three LMMs to participate in the program and no more than 40 option symbols to be used. But on April 1, 1997, the Commission approved an Exchange proposal to expand the program so that up to nine LMMs may participate and up to 150 option symbols may be used.[9]

The Exchange is now proposing to expand the LMM Book Pilot Program to eliminate the cap on the number of LMMs that may participate in the program. The Exchange notes that the program has been in operation for approximately eighteen months and no significant problems have occurred. The program has been viable and effective, and has resulted in significant cost savings to customers in Book execution charges. The Exchange believes that it has adequate systems and operation capacity to expand the scope of the program beyond its current limits.

The Exchange believes that the proposed change will make the Exchange LMM Program more competitive because it will provide LMMs with the same flexibility currently held by options specialists at other exchanges, and DPMs at the Chicago Board Options Exchange.

Basis

The Exchange believes the proposed rule change is consistent with Section 6(b)[10] of the Act, in general, and furthers the objectives of Section 6(b)(5),[11] in particular, in that it is designed to facilitate transactions in securities, to promote just and equitable principles of trade, and to protect investors and the public interest.

B. Self-Regulatory Organization's Statement on Burden on Competition

The Exchange does not believe that the proposed rule change will impose any burden on competition that is not necessary or appropriate in furtherance of the purposes of the Act.

C. Self-Regulatory Organization's Statement on Comments on the Proposed Rule Change Received From Members, Participants, or Others

Written comments on the proposed rule change were neither solicited nor received.

III. Date of Effectiveness of the Proposed Rule Change and Timing for Commission Action

Within 35 days of the date of publication of this notice in the **Federal Register** or within such longer period (i) as the Commission may designate up to 90 days of such date if it finds such longer period to be appropriate and publishes its reasons for so finding or (ii) as to which the self-regulatory organization consents, the Commission will:

(A) By order approve such proposed rule change, or

(B) Institute proceedings to determine whether the proposed rule change should be disapproved.

IV. Solicitation of Comments

Interested persons are invited to submit written data, views and arguments concerning the foregoing, including whether the proposed rule change is consistent with the Act. Persons making written submissions should file six copies thereof with the Secretary, Securities and Exchange Commission, 450 Fifth Street, N.W., Washington, D.C. 20549. Copies of the submission, all subsequent amendments, all written statements with respect to the proposed rule change that are filed with the Commission, and all written communications relating to the proposed rule change between the Commission and any person, other than those that may be withheld from the public in accordance with the provisions of 5 U.S.C. 552, will be available for inspection and copying in the Commission's Public Reference Room, 450 Fifth Street, N.W., Washington, D.C. 20549. Copies of such filing will also be available for inspection and copying at the principal office of the PCX. All submissions should refer to File No. SR–PCX–98–17 and should be submitted by June 12, 1998.

For the Commission, by the Division of Market Regulation, pursuant to delegated authority.[12]

Jonathan G. Katz,

Secretary.

[FR Doc. 98–13727 Filed 5–21–98; 8:45 am]

BILLING CODE 8010–01–M

[8] See Exchange Act Release No. 38273 (February 12, 1997), 62 FR 7489 (February 19, 1997) (approving File No. SR–PSE–96–45); *see also* Exchange Act Release No. 39667 (February 13, 1998), 63 FR 9895 (February 26, 1998) (order approving proposal to allow non-multiply-listed option issues to be traded under the program).

[9] See Exchange Act Release No. 38462 (April 1, 1997), 62 FR 16886 (April 8, 1997).

[10] 15 U.S.c. 78f(b).

[11] 15 U.S.C. 78f(b)(5).

[12] 17 CFR 200.30–3(a)(12).

SMALL BUSINESS ADMINISTRATION

[Declaration of Disaster #3076]

State of Alabama; Amendment #2

In accordance with a notice from the Federal Emergency Management Agency dated April 29, 1998, the above-numbered Declaration is hereby amended to include Walker County in the State of Alabama as a disaster area due to damages caused by severe storms and tornadoes beginning on April 8, 1998 and continuing through April 20, 1998.

In addition, applications for economic injury loans from small businesses located in the contiguous county of Marion, Alabama may be filed until the specified date at the previously designated location. Any counties contiguous to the above-name primary county and not listed herein have been previously declared.

All other information remains the same, i.e., the deadline for filing applications for physical damage is June 8, 1998 and for economic injury the termination date is January 11, 1999.

(Catalog of Federal Domestic Assistance Program Nos. 59002 and 59008)

Dated: May 8, 1998.

Bernard Kulik,

Associate Administrator for Disaster Assistance.

[FR Doc. 98–13743 Filed 5–21–98; 8:45 am]

BILLING CODE 8025–01–P

SMALL BUSINESS ADMINISTRATION

[Declaration of Disaster #3069]

State of Georgia; Amendment #7

In accordance with notices from the Federal Emergency Management Agency (FEMA) dated May 1, 8, and 11, 1998 and a notification from FEMA dated May 12, 1998, the above-numbered Declaration is hereby amended to include Columbia, Floyd, Lincoln, Peach, ockdale, Towns, and Union Counties in the State of Georgia as a disaster area due to damages caused by severe storms and flooding. This declaration is further amended to establish the incident period for this disaster as beginning on February 14, 1998 and continuing through May 11, 1998, and to extend the deadline for filing applications for physical damages resulting from this disaster to May 22, 1998.

In addition, applications for economic injury loans from small businesses located in the following contiguous counties may be filed until the specified date at the previously designated

location: Elbert and Wilkes Counties in Georgia; McCormick County, South Carolina; Cherokee County, North Carolina; and Cherokee County, Alabama.

Any counties contiguous to the above-named primary counties and not listed herein have been previously declared.

All other information remains the same, i.e., the deadline for filing applications for economic injury is December 11, 1998.

(Catalog of Federal Domestic Assistance Program Nos. 59002 and 59008.)

Dated: May 13, 1998.

Bernard Kulik,

Associate Administrator for Disaster Assistance.

[FR Doc. 98–13724 Filed 5–21–98; 8:45 am]

BILLING CODE 8025–01–P

SMALL BUSINESS ADMINISTRATION

[Declaration of Disaster #3082]

State of Kentucky; Amendment #1

In accordance with notices from the Federal Emergency Management Agency dated May 10 and 11, 1998, the above-numbered Declaration is hereby amended to include Leslie County in the State of Kentucky as a disaster area due to damages caused by severe storms, tornadoes, and flooding, and to establish the incident period for this disaster as beginning on April 16, 1998 and continuing through May 10, 1998.

All counties contiguous to the above-name primary county have been previously declared.

All other information remains the same, i.e., the deadline for filing applications for physical damage is June 28, 1998 and for economic injury the termination date is January 29, 1999.

(Catalog of Federal Domestic Assistance Program Nos. 59002 and 59008)

Dated: May 13, 1998.

Bernard Kulik,

Associate Administrator for Disaster Assistance.

[FR Doc. 98–13742 Filed 5–21–98; 8:45 am]

BILLING CODE 8025–01–P

SMALL BUSINESS ADMINISTRATION

[Declaration of Disaster #3078]

State of Tennessee; Amendment #2

In accordance with notices from the Federal Emergency Management Agency dated May 11 and 12, 1998, the above-numbered Declaration is hereby amended to include Madison, Polk, and Shelby Counties in the State of Tennessee as a disaster area due to damages caused by severe storms, tornadoes, and flooding beginning on April 16, 1998 and continuing.

In addition, applications for economic injury loans from small businesses located in the following contiguous counties may be filed until the specified date at the previously designated location: Fayette, Hardeman, and Tipton Counties in Tennessee; DeSoto and Marshall Counties in Mississippi; and Fannin County in Georgia.

Any counties contiguous to the above-name primary counties and not listed herein have been previously declared.

All other information remains the same, i.e., the deadline for filing applications for physical damage is June 19, 1998 and for economic injury the termination date is January 20, 1999.

(Catalog of Federal Domestic Assistance Program Nos. 59002 and 59008)

Dated: May 13, 1998

Bernard Kulik,

Associate Administrator for Disaster Assistance.

[FR Doc. 98–13744 Filed 5–21–98; 8:45 am]

BILLING CODE 8025–01–P

SOCIAL SECURITY ADMINISTRATION

Statement of Organization, Functions and Delegations of Authority

This statement amends Part S of the Statement of the Organization, Functions and Delegations of Authority which covers the Social Security Administration (SSA). Chapter S8 covers the Office of the Inspector General (OIG). Notice is given that Chapter S8, the Office of the Inspector General, is being amended to reflect a realignment of functions and typographical changes. The Office of Operations (OP) (S8J) is being abolished and the functions are being incorporated into the Office of Management Services (OMS) (S8G). Divisional functions are being realigned in both the Office of Investigations (OI) (S8B) and the Office of Audit (OA) (S8C). New divisional structures are being established to achieve the functional realignment. A Deputy Counsel is being established in the Office of the Counsel to the Inspector General (OCIG) (S8H). Typographical changes are also being made in the OCIG (S8H). The revised chapter reads as follows:

Section S8.10 *The Office of the Inspector General—(Organization):*

Delete:

H. The Office of Operations (OP) (S8J).

Section S8.20 *The Office of the Inspector General*—(Functions):

Amend to read as follows:

F. The Office of Management Services (OMS) (S8G) provides staff assistance to the Inspector General (IG) and Deputy Inspector General. OMS formulates and assists the IG with the execution of the OIG budget and confers with the Office of the Commissioner, the Office of Management and Budget and the Congress on budget matters. The office manages and maintains the OIB Allegation Management System (AMS) data base for all allegations reported to the OIG nationwide. OMS conducts management analyses and establishes and coordinates general management policies of the OIG. This office serves as the OIG liaison on personnel management and other administrative and management policies and practices, as well as on equal employment opportunity and civil rights matters. This office is also responsible for the development, design and redesign of major automated systems throughout the OIG. OMS is responsible for and coordinates the OIG's strategic planning function and the development and implementation of performance measures required by the Government Performance and Results Act; public affairs; interagency activities; OIG reporting requirements and publications; and responses to Congressional inquiries.

Delete in its entirety:

H. The Office of Operations (OP) (S8J).

Section S8B.10 *The Office of Investigations*—(Organization):

Delete:

I. The Washington, D.C. Field Division (WFD) (S8BJ).

K. The Tampa Field Division (TFD) (S8BL).

Reletter:

''J.'' to ''I.''
''L.'' to ''J.''
''M.'' to ''K.''
''N.'' to ''L.''

Establish

M. The Philadelphia Field Division (PFD) (S8BQ).

N. The St. Louis Field Division (SLFD) (S8BR).

O. The Denver Field Division (DVFD) (S8BS).

P. The Seattle Field Division (SFD) (S8BT).

Q. The Allegation Management Division (AMD) (S8BU).

Section S8B.20 *The Office of Investigations*—(Functions):

Delete in its entirety:

I. The Washington, D.C. Field Division (WFD) (S8BJ).

K. The Tampa Field Division (TFD) (S8BL).

Reletter:

''J.'' to ''I.''

''L.'' to ''J.''

''M.'' to ''K.''

''N.'' to ''L.''

Establish:

M. The Philadelphia Field Division (PFD) S8BQ) is responsible for conducting criminal, civil and administrative investigations of fraud involving Social Security programs and operations within the designated geographic area. Investigative efforts by the division lead to criminal convictions, civil monetary penalties, or administrative sanctions.

N. The St. Louis Field Division (SLFD) (S8BR) is responsible for conducting criminal, civil and administrative investigations of fraud involving Social Security programs and operations within the designated geographic area. Investigative efforts by the division lead to criminal convictions, civil monetary penalties, or administrative sanctions.

O. The Denver Field Division (DVFD) (S8BS) is responsible for conducting criminal, civil and administrative investigations of fraud involving Social Security programs and operations within the designated geographic area. Investigative efforts by the division lead to criminal convictions, civil monetary penalties, or administrative sanctions.

P. The Seattle Field Division (SFD) (S8BT) is responsible for conducting criminal, civil and administrative investigations of fraud involving Social Security programs and operations within the designated geographic area. Investigative efforts by the division lead to criminal convictions, civil monetary penalties, or administrative sanctions.

Q. The Allegation Management Division (AMD) (S8BU) is responsible for managing the SSA Hotline, which plans, conducts, directs, and assists criminal investigations of alleged violations of the Social Security laws. The division reviews OIG files and records in response to the Freedom of Information Act requests.

Section S8C.10 *The Office of Audit*—(Organization):

Delete:

H. The Systems and Financial Audit Division (SFAD) (S8CJ).

Establish:

H. The Systems Audit Division (SAD) (S8CK).

I. The Financial Audit Division (FAD) (S8CL).

Section S8C.20 *The Office of Audit*—(Functions):

D. The Evaluations and Technical Services Division (ETSD) (S8CB).

Amend to read as follows:

4. The division audits and evaluates SSA's efforts to ensure payment accuracy for General Management Audits, Old-Age and Survivors Insurance, Disability Insurance, and Supplemental Security Income programs.

E. The Eastern Program Audit Division (EPAD) (S8CE).

Amend to read as follows:

1. The primary responsibilities include Enumeration and Operations.

Delete in its entirety:

H. The Systems and Financial Audit Division (SFAD) (S8CJ).

Establish:

H. The Systems Audit Division (SAD) (S8CK) plans, conducts, oversees and reports on the results of audits of the Centralized Automated Systems. The division is also responsible for general and application controls in SSA's automated data processing systems and for reviews of the operational efficiency of SSA's data processing operations.

I. The Financial Audit Division (FAD) (S8CL) plans, conducts, oversees and reports on the results of audits of Agency financial statements.

1. The division is responsible for financial management, as defined in the Chief Financial Officers' Act of 1990, the include audits of accounting and financial reporting, financial systems, asset management, information resource management, budget execution and internal controls.

2. The division is also responsible for finance contracts and Disability Determination Services' administrative costs.

Section S8G.00 *The Office of Management Services—(Mission):*

Amend to read as follows:

The Office of Management Services (OMS) (S8G) provides staff assistance to the Inspector General (IG) and Deputy Inspector General. OMS formulates and assists the IG with the execution of the OIG budget and confers with the Office of the Commissioner, the Office of Management and Budget and the Congress on budget matters. The office manages and maintains the OIG Allegation Management System (AMS) data base for all allegations reported to the OIG nationwide. OMS conducts management analyses and establishes and coordinates general management policies of the OIG. This office serves as the OIG liaison on personnel management and other administrative and management policies and practices, as well as on equal employment opportunity and civil rights matters. This office is also responsible for the development, design and redesign of major automated systems throughout the OIG. OMS is responsible for and coordinates the OIG's strategic planning function and the development and implementation of performance measures required by the Government Performance and Results Act; public affairs; interagency activities; OIG reporting requirements and publications; and responses to Congressional inquiries.

Section S8G.20 *The Office of Management Services*—(Functions):

B. The Deputy Assistant Inspector General for Management Services (S8G).

Delete item 2 in its entirety.

Renumber:

''3.'' To ''2.''

Amend item 2 to change the last two words of the first sentence from ''OIG Hotline'' to ''SSA Hotline.''

Add:

3. Manages and coordinates the OIG's strategic planning function and the development and implementation of performance measures required by the Government Performance and Results Act; pubic affairs; interagency activities; OIG reporting requirements and publications; and responses to Congressional inquires.

Section S8H.00 *The Office of the Counsel to the Inspector General*—(Mission):

Amend the second sentence to read as follows:

''The OCIG provides advice on a variety of legal issues concerning relevant regulatory and procedural information and reviews documents and other materials to ensure legal sufficiency and compliance with regulatory requirements.''

Section S8H.10 *The Office of the Counsel to the Inspector General*—(Organization):

Reletter:

''B.'' to ''C.''

Establish;

B. Deputy Counsel to the Inspector General (S8H).

Section S8H.20 *The Office of the Counsel to the Inspector General*—(Functions):

Reletter:

''B.'' to ''C.''

Establish:

B. The Deputy Counsel to the Inspector General assists the Counsel to the Inspector General in carrying out his/her responsibilities. Performs other duties as the Counsel to the Inspector General may prescribe.

C. The Immediate Office of the Counsel to the Inspector General (S8H).

Delete from item 6 ''and Freedom of Information.''

Delete existing Subchapter S8J, the Office of Operations.

Dated: April 3, 1998.

David C. Williams,

Inspector General for Social Security.

[FR Doc. 98–13651 Filed 5–21–98; 8:45 am]

BILLING CODE 4190–29–M

DEPARTMENT OF STATE

Bureau of Political-Military Affairs

[Public Notice 2822]

Determination Under the Arms Export Control Act

Pursuant to Section 654(c) of the Foreign Assistance Act of 1961, as amended, notice is hereby given that the Acting Under Secretary of State for Arms Control and International Security Affairs and Director, U.S. Arms Control and Disarmament Agency has made a determination pursuant to Section 81 of the Arms Export Control Act and has concluded that publication of the determination would be harmful to the national security of the United States.

Dated: May 8, 1998.

Eric D. Newsom,

Acting Assistant Secretary of State for Political-Military Affairs.

[FR Doc. 98–13666 Filed 5–21–98; 8:45 am]

BILLING CODE 4710–25–M

DEPARTMENT OF STATE

[Public Notice #2823]

Shipping Coordinating Committee; Meeting

The Shipping Coordinating Committee will hold a meeting on June 12, 1998 from 10:00 am to 1:00 pm to obtain public comment on issues to be addressed at the June 29th–July 2, 1998 United Nations Educational, Scientific and Cultural Organization (UNESCO) meeting of governmental experts on the draft Convention on Underwater Cultural Heritage.

The meeting will be held at the Department of Commerce located at 14th and Constitution NW, Washington, DC 20230, Room 5430. Interested members of public are invited to attend, up to the capacity of the room.

For further information, please contact Mr. Robert Blumberg, Office of Oceans Affairs, telephone (202) 647–4971 or Mr. Ashley Roach, Office of the Legal Adviser, telephone (202) 647–1646.

Dated: May 15, 1998.

Stephen M. Miller,

Executive Secretary, Shipping Coordinating Committee.

[FR Doc. 98–13643 Filed 5–21–98; 8:45 am]

BILLING CODE 4710–09–M

TENNESSEE VALLEY AUTHORITY

Paperwork Reduction Act of 1995, as Amended by Public Law 104–13; Proposed Collection, Comment Request

AGENCY: Tennessee Valley Authority.

ACTION: Proposed Collection; comment request.

SUMMARY: The proposed information collection described below will be submitted to the Office of Management and Budget (OMB) for review, as required by the Paperwork Reduction Act of 1995 (44 U.S.C. Chapter 35, as amended). The Tennessee Valley Authority is soliciting public comments on this proposed collection as provided by 5 CFR 1320.8(d)(1). Requests for information, including copies of the information collection proposed and supporting documentation, should be directed to the Agency Clearance Officer: Wilma H. McCauley, Tennessee Valley Authority, 1101 Market Street (WR 4Q), Chattanooga, Tennessee 37402–2801; (423) 751–2523. Comments should be sent to the Agency Clearance Officer no later than July 21, 1998.

SUPPLEMENTARY INFORMATION:

Type of Request: Regular submission.

Title of Information Collection: Power Distributor Monthly & Annual Reports to TVA.

Frequency of Use: Monthly and Annual.

Type of Affected Public: Business or Local Government.

Small Businesses or Organizations Affected: Yes.

Federal Budget Functional Category Code: 271.

Estimated Number of Annual Responses: 2,067.

Estimated Total Annual Burden Hours: 3,816.

Estimated Average Burden Hours Per Response: 1.8 hours.

Need For and Use of Information: This information collection supplies TVA with financial and accounting information to help ensure that electric power produced by TVA is sold to consumers at rates which are as low as feasible.

William S. Moore,

Senior Manager, Administrative Services.

[FR Doc. 98–13660 Filed 5–21–98; 8:45 am]

BILLING CODE 8120–08–P

DEPARTMENT OF TRANSPORTATION

Office of the Secretary

Reports, Forms and Recordkeeping Requirements Agency Information Collection Activity Under OMB Review

AGENCY: Office of the Secretary, DOT.

ACTION: Notice.

SUMMARY: In compliance with the Paperwork Reduction Act of 1995 (44 U.S.C. 3501 *et seq.*), this notice announces that the Information Collection Requests (ICRs) abstracted below have been forwarded to the Office of Management and Budget (OMB) for review and approval. The ICRs describe the nature of the information collections and their expected burden. The **Federal Register** Notice with a 60-day comment period soliciting comments on the following information collections was published on February 19, 1998 [63 FR 8517–8522].

DATES: Comments must be submitted on or before June 22, 1998.

FOR FURTHER INFORMATION CONTACT: Michael Robinson, NHTSA Information Collection Clearance Officer at (202) 366–9456.

SUPPLEMENTARY INFORMATION:

National Highway Traffic Safety Administration (NHTSA)

(1) Title: 49 CFR Part 573, Defect and Noncompliance Reports.

OMB Control Number: 2127–0004.

Type Request: Extension of a currently approved collection.

Form(s): NA.

Affected Public: Business or other for-profit.

Abstract: NHTSA's statute at 49 U.S.C. 30112, and 30116–30121 requires the manufacturers of motor vehicles and motor vehicle equipment to recall and remedy their products that do not comply with applicable safety standards or contain a defect related to motor vehicle safety. The manufacturer must notify the Secretary of Transportation (through NHTSA), owners, purchasers and dealers of its determination, and must remedy the defect or noncompliance. The notification must be furnished within a reasonable time after a determination is made with respect to defect or failure to comply. The manufacturer of each motor vehicle or item of replacement equipment presented for remedy shall make the remedy without charge. If a manufacturer fails to notify owners or purchasers within the period specified, the court may hold it liable under a civil penalty with respect to such failure.

The Secretary may hold hearings in which any interested person may make

oral or written views on questions of whether a manufacturer has reasonably met its obligations to notify and remedy a defect or failure to comply, or the Secretary may place specific actions on the manufacturer to comply. The manufacturer shall furnish the Secretary with a true copy of all notices, bulletins, and other communications to the manufacturer's dealers, owners and purchasers regarding any defect or noncompliance in the manufacturer's vehicle or item of equipment. These statutes shall not create or affect any warranty obligations under State and Federal law. To implement this authority, NHTSA promulgated 49 CFR Part 573, Defect and Noncompliance Reports. This regulation sets out the following requirements: (1) Manufacturers are to include specific information in reports that must be filed with NHTSA within five working days of a determination of defect or noncompliance, pursuant to 49 U.S.C. 30118 and 30119; (2) Manufacturers are to submit quarterly reports to the agency on the progress of recall campaigns; (3) Manufacturers are to furnish copies to the agency of notices, bulletins, and other communications to dealers, owners, or purchasers regarding any defect or noncompliance, and; (4) Manufacturers are to retain records of owners or purchasers of their products that have been involved in a recall campaign.

Estimated Annual Burden: 6,300 hours.

(2) Title: Consumer Complaint/Recall Audit Information.

OMB Control Number: 2127–0008.

Type Request: Extension of a currently approved collection.

Form(s): HS Form 350 and 350C.

Affected Public: Individuals or households.

Abstract: Chapter 301 of Title 49 of the United States Code (formerly the National Traffic and Motor Vehicle Safety Act, as amended (the Act), the Secretary of Transportation is authorized to require manufacturers of motor vehicles and items of motor vehicle equipment to conduct owner notification and remedy, i.e., a recall campaign, when it has been determined that a safety defect exists in the performance, construction, components, or materials in motor vehicles and motor vehicle equipment. To make this determination, the National Highway Traffic Safety Administration (NHTSA) solicits information from vehicle owners which is used to identify and evaluate possible safety-related defects and provide the necessary evidence of the existence of such a defect. Under the Authority of Chapter 301 of Title 49 of the United States Code, the Secretary of Transportation is authorized to require manufacturers of motor vehicle and items of motor vehicle equipment which do not comply with the applicable motor vehicle safety standards or contains a defect that relates to motor vehicle safety to notify each owner that their vehicle contains a safety defect or noncompliance. Also, the manufacturer of each such motor vehicle or item of replacement equipment presented for remedy pursuant to such notification shall cause such defect or noncompliance to be remedied without charge. In the case of a motor vehicle presented for remedy pursuant to such notification, the manufacturer shall cause the vehicle to be remedied by whichever of the following means he elects: (1) By repairing such vehicle; (2) by replacing such motor vehicle without charge; or (3) by refunding the purchase price less depreciation. To ensure these objectives are being met, NHTSA audits recalls conducted by manufacturer. These audits are performed on a randomly selected number of vehicle owners for verification and validation purposes.

Estimated Annual Burden: 36,380 hours.

(3) Title: 49 CFR Part 537—Automotive Fuel Economy Reports.

OMB Control Number: 2127–0019.

Type Request: Extension of a currently approved collection.

Affected Public: Business or other for-profit.

Abstract: 49 United States Code (U.S.C.) 32907(a) requires a manufacturer report to the Secretary of Transportation on whether the manufacturer will comply with an applicable average fuel economy standard under 49 U.S.C. 32902 of this title for the model year for which the report is made; the actions the manufacturer has taken or intends to take to comply with the standard; and other information the Secretary requires by regulation. To start this statutory requirement, the agency issued a regulation specifying the required content of the Automotive Fuel Economy Reports.

Estimated Annual Burden: 3,300 hours.

(4) Title: Consolidated Labeling Requirements for Motor Vehicles (Except the VIN).

OMB Control Number: 2127–0512.

Type Request: Extension of a currently approved collection.

Affected Public: Business or other for-profit.

Abstract: 49 U.S.C. 3011 authorizes the issuance of Federal Motor Vehicle Safety Standards (FMVSS) and regulations. The agency, in prescribing a FMVSS or regulation is to consider available relevant motor vehicle safety data, and consult with other agencies as it deems appropriate. Further, the statute mandates that in issuing any FMVSS or regulation, the agency consider whether the standard or regulation is ''reasonable, practicable and appropriate for the particular type of motor vehicle or item of motor vehicle equipment for which it is prescribed,'' and whether such a standard will contribute to carrying out the purpose of the Act. The Secretary is authorized to revoke such rules and regulations as he deems necessary to carry out this subchapter. Using this authority, the agency issued the following FMVSS and regulations, specifying labeling requirements to aid the agency in achieving many of its safety goals. FMVSS 105, 205, 209, and 567 are the standards the agency issued. Through FMVSS 105, this standard, under section 5.4 requiring labeling, each vehicle shall have a brake fluid warning statement in letters at least one-eighth of an inch high on the master cylinder reservoirs and located so as to be visible by direct view. FMVSS 205 requires manufacturer's distinctive trademark; manufacturer's DOT code number; Mode of glazing (alpha-numerical designation) and Type of glazing (there are currently 13 items of glazing ranging from plastic windows to bullet resistant windshields). In addition to requirements which apply to all glazing, certain specialty items such as standee windows in buses, roof openings and interior partitions made of plastic require that the manufacturer affix a removable label to each item. The label specifies cleaning instructions which will minimize the loss of transparency. Other information may be provided by the manufacturer but is not required. FMVSS 209-Seat belt Assemblies requires safety belts to be labeled with the year of manufacture, the; model and the name or trademark of the manufacturer (S4.5(j). Additionally, replacement safety belts that for specific models of motor vehicles must have labels or accompanying instruction sheets to specify the applicable vehicle models and seating positions (S4.5(k)). All other replacement belts are required to be accompanied by an installation instruction sheet (S4.1(k)). Seat belt assemblies installed as original equipment in new motor vehicles need not be required to be labeled with position model information. This information is only useful if the assembly is removed with the intention

of using the assembly as a replacement in another vehicle; this is not a common practice. 49 U.S.C. 30111 requires each manufacturer or distributor of motor vehicle to furnish to the dealer or distributor of the vehicle a certification that the vehicle meets all applicable FMVSS. This certification is required by that provision to be in the form of a label permanently affixed to the vehicle. Under 49 U.S.C. 32504, vehicle manufacturers are directed to make a similar certification with regard to bumper standards. To implement this requirement, NHTSA issued 49 CFR Part 567. The agency's regulations establish form and content requirement for the certification labels.

Estimated Annual Burden: 71,095 hours.

(5) Title: 49 CFR 571.116, Motor Vehicle Brake Fluids.

OMB Control Number: 2127–0521.

Type Request: Extension of a currently approved collection.

Affected Public: Business or other for-profit.

Abstract: 49 U.S.C. 309111, 30112 and 30117 of the National Traffic and Motor Vehicle Safety Act of 1966, authorize the issuance of Federal Motor Vehicle Safety Standards (FMVSS). The agency in prescribing a FMVSS is to consider available relevant motor vehicle safety data and to consult with appropriate agencies and obtain safety comments/suggestions from the responsible counties, States, agencies, safety commissions, public and other safety related authorities. Further the Act mandates that in issuing any FMVSS the agency consider whether the standards will contribute to carry out the purpose of the Act. The Secretary is authorized to revoke such rules and regulations as he/she deems necessary to carry out this Act. FMVSS No. 116 Motor Vehicle Brake Fluids, specific performance and design requirements for motor vehicle brake fluids and hydraulic system mineral oils. Section 5.2.2 specific labeling requirements for manufacturers and packagers of brake fluids as well as packagers of hydraulic system mineral oils. The information on the label of a container of motor vehicle brake fluid or hydraulic system mineral oil is necessary to insure the following: the contents of the container are clearly stated; these fluids are used for their intended purpose only; and the containers are properly disposed of when empty. Improper use or storage of these fluids could have dire consequences for the operations of vehicles or equipment in which they area used. This labeling information is used by motor vehicle owners, operators, and vehicle service facilities to aid in the proper selection of brake fluids and hydraulic system mineral oils for use in motor vehicles and hydraulic equipment, respectively.

Estimated Annual Burden: 7,680 hours.

(6) Title: Drug Offender's License Suspension Certification.

OMB Control Number: 2127–0566.

Type Request: Extension of a currently approved collection.

Affected Public: Local, State or Tribal Government.

Abstract: Section 33 of the Department of Transportation (DOT) and Related Agencies Appropriations Act for FY 1991 amends 23 U.S.C. 104, and requires the withholding of certain Federal-aid highway funds from States that do not enact legislation requiring the revocation or suspension of an individual's driver's license upon conviction for any violation of the Controlled Substances Act or any drug offense. This notice proposes the violation of the Controlled Substances Act or any drug offense. This notice proposes the manner in which States certify that they are not subject to this withholding, and disposition of funds that are withheld.

Estimated Annual Burden: 260 hours.

(7) Title: Voluntary Child Safety Seat Registration Form.

OMB Control Number: 2127–0576.

Type Request: Extension of a currently approved collection.

Affected Public: Individuals or households.

Abstract: Chapter 301 of Title 49 of the United States provides that if either NHTSA or a manufacturer determines that motor vehicles or items of motor vehicle equipment contain a defect that relates to motor vehicle safety or fail to comply with an applicable Federal Motor Vehicle Safety Standard, the manufacturer must notify owners and purchasers of the defect or noncompliance and must provide a remedy without charge. Pursuant to 49 CFR Part 577 Defects and noncompliance notification for equipment items, including child safety seats, must be sent by first class mail to the most recent purchaser known to the manufacturer. In the absence of a registration system, man owners of child safety seats are not notified of safety defects and noncompliance, since the manufacturer is not aware of their identities.

Estimated Annual Burden: 26 hours.

ADDRESSES: Send comments, within 30 days, to the Office of Information and Regulatory Affairs, Office of Management and Budget, 725–17th Street, NW., Washington, DC 20503, Attention DOT Desk Officer. Comments are invited on: whether the proposed collection of information is necessary for the proper performance of the functions of the Department, including whether the information will have practical utility; the accuracy of the Department's estimate of the burden of the proposed information collection; ways to enhance the quality, utility and clarity of the information to be collected; and ways to minimize the burden of the collection of information on respondents, including the use of automated collection techniques or other forms of information technology.

A comment to OMB is best assured of having its full effect if OMB receives it within 30 days of publication.

Issued in Washington, DC, on May 13, 1998.

Phillip A. Leach,

Clearance Officer, United States Department of Transportation.

[FR Doc. 98–13699 Filed 5–21–98; 8:45 am]

BILLING CODE 4910–62–P

DEPARTMENT OF TRANSPORTATION

Office of the Secretary

[Docket No. OST–96–1472]

Privacy Act of 1974; Notice to Amend System of Records to Include a New Routine Use

AGENCY: United States Coast Guard, DOT.

ACTION: Notice to amend system of records to include a new routine use.

SUMMARY: The Department of Transportation, on behalf of the United States Coast Guard, proposes to alter a system of records subject to the Privacy Act of 1974. The records system is the Military Pay and Personnel System, DOT/CG–623. The system will be altered to include, as a Routine Use, the provision of information to duly recognized Coast Guard auxiliary organizations and personnel whose purpose is to provide morale and welfare information to members or their dependents.

EFFECTIVE DATE: June 29, 1998.

ADDRESS: Interested individuals may comment on this publication by writing to Ms. Vanester M.Williams, Privacy Act Coordinator, U.S. Department of Transportation, Office of the Chief Information Officer, S–80, 400 7th Street, SW., Washington, DC 20590.

FOR FURTHER INFORMATION CONTACT: Inquiries or comments concerning this

proposed altered system should be directed to Commandant (G-WR–3), ATTN: Mr. David M. Swatloski, U.S. Coast Guard Headquarters, 2100 Second Street, SW., Washington, DC 20593–0001. If no comments are received, the proposed change will become effective on the above-mentioned date. If comments are received, the comments will be considered and where adopted, the document will be republished with the change.

SUPPLEMENTARY INFORMATION: DOT systems of records notices subject to the Privacy Act of 1974 (5 U.S.C. 552a) as amended, have been published in the **Federal Register** and are available from the above mentioned address. The specific change to the record system being amended is highlighted in *italics* below in the notice, as amended, which is being published in its entirety.

DOT/CG–623

SECURITY CLASSIFICATION:

Sensitive.

SYSTEM NAME:

Military Pay and Personnel System.

SYSTEM LOCATION:

Department of Transportation (DOT).

a. U.S. Coast Guard (CG): Department of Transportation Computer Center, 400 7th Street, SW., Washington, DC 20590–0001.

b. U.S. Coast Guard Pay and Personnel Center, 444 S.E., Quincy Street, Topeka, KS 66683–3591

c. U.S. Coast Guard: 2100 2nd Street, SW., Washington, DC 20593–0001

d. Decentralized data segments are located at the unit maintaining the individual's pay and personnel record and permanent duty unit.

CATEGORIES OF INDIVIDUALS COVERED BY THE SYSTEM:

a. All Coast Guard military personnel, active duty and reserve.

b. Retired reserve Coast Guard military personnel waiting for pay at age 60.

c. Active duty National Oceanic and Atmospheric Administration [NOAA] officers.

d. Personnel separated from service in all the preceding categories.

CATEGORIES OF RECORDS IN THE SYSTEM:

All categories of records are electronic and/or paper, and may include identifying information, such as name[s], date of birth, home residence, mailing address, Social Security number, payroll information, and home telephone number. Records reflect:

a. Work experience, educational level achieved, and specialized education or training obtained in and outside of military service.

b. Military duty assignments, ranks held, pay and allowances, personnel actions such as promotions, demotions, or separations.

c. Enrollment or declination of enrollment in insurance programs.

d. Performance evaluation.

e. The individual's desires for future assignments, training requested, and notations by assignment officers.

f. Information for determinations of waivers and remissions of indebtedness to the U.S. Government.

g. Information for the purpose of validating legal requirements for garnishment of wages.

AUTHORITY FOR MAINTENANCE OF SYSTEM:

Title 37 U.S.C. as implemented in GAO Manual for Guidance of Federal Agencies, Title 2 GAO, Title 6 GAO and Title 14 U.S.C. 92(i).

PURPOSE:

This system, as described in the Summary, will be altered to include, as a Routine Use, the provision of information to duly recognized United States Coast Guard auxiliary organizations and personnel whose purpose is to provide morale and welfare information to members or their dependents.

ROUTINE USE OF RECORDS MAINTAINED IN THE SYSTEM, INCLUDING CATEGORIES OF USERS AND THE PURPOSES OF SUCH USES:

a. To the Department of Treasury for the purpose of disbursement of salary, U.S. Savings Bonds, allotments, or travel claim payments.

b. To government agencies to disclose earnings and tax information.

c. To the Department of Defense and Veterans Administration for determinations of benefit eligibility for military members and their dependents.

d. To contractors to manage payment and collection of benefit claims.

e. To the Department of Defense for manpower and readiness planning.

f. To the Comptroller General for the purpose of processing waivers and remissions.

g. To contractors for the purpose of system enhancement, maintenance, and operations.

h. To federal, state, and local agencies for determination of eligibility for benefits connected with the Federal Housing Administration programs.

i. To provide an official of another federal agency information needed in the performance of official duties to reconcile or reconstruct data files in support of functions for which the records were collected and maintained.

j. To an individual's spouse, or person responsible for the care of the individual concerned when the individual to whom the record pertains is mentally incompetent, critically ill or under other legal disability for the purpose of assuring the individual is receiving benefits or compensation they are entitled to receive.

k. To a requesting government agency, organization, or individual the home address and other relevant information on those individuals who, it is reasonably believed, might have contracted an illness, been exposed to, or suffered from a health hazard while a member of government service.

l. To businesses for the purpose of electronic fund transfers or allotted pay transactions authorized by the individual concerned.

m. To credit agencies and financial institutions for the purpose of processing credit arrangements authorized by the individual concerned.

n. To other government agencies for the purpose of earnings garnishment.

o. To prepare the Officer Register and Reserve Officer Register which is provided to all Coast Guard officers and the Department of Defense.

p. To other federal agencies and collection agencies for the collection of indebtedness and outstanding travel advances to the federal government.

q. The home mailing addresses and telephone numbers of members and their dependent's to duly appointed Family Ombudsman and personnel within the Coast Guard for the purpose of providing entitlement information to members or their dependents.

r. The home mailing addresses and telephone numbers of members and their dependent's to Coast Guard auxiliary organizations officially recognized by the Commandant whose purpose is to provide family support programs which enhance the morale and welfare of active duty Coast Guard members and their dependent's.

See Prefatory Statement of General Routine Uses; items 3 and 5 do not apply.

DISCLOSURE TO CONSUMER AGENCIES: *None.*

POLICIES AND PRACTICES FOR STORING, RETRIEVING, ACCESSING, RETAINING, AND DISPOSING OF RECORDS IN THE SYSTEM:

STORAGE:

The storage is on computer disks, magnetic tape microfilm, and paper forms in file folders.

RETRIEVABILITY:

Retrieval from the system is by name or social security number and can be accessed by employees in pay and

personnel offices and other pay and personnel employees located elsewhere who have a need for the record in the performance of their duties.

SAFEGUARDS:

Computers provide privacy and access limitations by requiring a user name and password match. Access to decentralized segments are similarly controlled. Only those personnel with a need to have access to the system are given user names and passwords. The magnetic tape backups have limited access in that users must justify the need and obtain tape numbers and volume identifiers from a central source before they are provided data tapes. Paper record and microfilm records are in limited access areas in locking storage cabinets.

RETENTION AND DISPOSAL:

Leave and Earnings Statements, and pay records are microfilmed and retained on site four years, then archived at the Federal Record Center, and destroyed when 50 years old. The official copy of the personnel record is maintained in the Official Officer Service Records, DOT/CG 626 for active duty officers, the Enlisted Personnel Record System, DOT/CG 629 for active duty enlisted personnel or the Official Coast Guard Reserve Service Record, OST/CG 576 for inactive duty reservists. Duplicate magnetic copies of the pay and personnel record are retained at an off site facility for a useful life of seven years. Paper records for waivers and remissions are retained on site six years three months after the determination and then destroyed. Paper records to determine legal sufficiency for garnishment are retained on site six years three months after the member separates from the service or the garnishment is terminated and then destroyed.

SYSTEM MANAGER(S) AND ADDRESS:

a. All information on Coast Guard members other than b, c, and d, below:

(1) For active duty members of the Coast Guard: Chief, Office of Personnel, Department of Transportation, U.S. Coast Guard Headquarters, 2100 2nd Street, SW, Washington, DC 20593–0001.

(2) For Coast Guard inactive duty reserve members and retired Coast Guard reservists awaiting pay at age 60: Chief, Office of Readiness and Reserve, Department of Transportation, U.S. Coast Guard Headquarters, 2100 2nd Street, SW, Washington, DC 20593–0001.

b. For Coast Guard Waivers and Remissions: Chief, Personnel Services Division (G–PS), Office of Personnel, U.S. Coast Guard Headquarters, 2100 2nd Street, SW, Washington, DC 20590–0001.

c. For records used to determine legal sufficiency for garnishment of wages and pay records: Commanding Officer (LGL), U.S. Coast Guard Pay and Personnel Center, 444 S.E. Quincy Street, Topeka, KS 66683–3591.

For data added to the decentralized data segment the commanding officer, officer-in-charge of the unit handling the individual's pay and personnel record, or Chief, Administrative Services Division for individuals whose records are handled by Coast Guard Headquarters.

e. For NOAA members: Commissioned Personnel Center, National Oceanic and Atmospheric Administration, 1315 East-West Highway, Room 12100, Silver Spring, MD 20910–3282.

NOTIFICATION PROCEDURE:

Inquiries should be directed to:

a. For all information on Coast Guard members other than b., c., and d. below: Department of Transportation, U.S. Coast Guard Headquarters (G–SII), 2100 2nd Street, SW, Washington, DC 20593–0001.

b. For records used to determine legal sufficiency for garnishment of wages and pay records: Commanding Officer, U.S. Coast Guard Pay and Personnel Center, 444 S.E. Quincy Street, Topeka, KS 66683–3591.

For data added to the decentralized data segment: The commanding officer or officer-in-charge of the unit handling the individual's pay and personnel record, or Chief, Administrative Services Division for individuals whose records are handled by Coast Guard Headquarters. Addresses for the units handling the individual's pay and personnel record are available from the individual's commanding officer.

d. For all information on NOAA members: Commissioned Personnel Center, National Oceanic and Atmospheric Administration, 1315 East-West Highway, Room 12100, Silver Spring, MD 20910–3282.

RECORD ACCESS PROCEDURES:

Contact the addressee under notification procedures and specify the exact information you desire. Requests must include the full name and social security number of the individual concerned. Prior written notification of personal visits is required to ensure that the records will be available at the time of visit. Photographic proof of identity will be required prior to release of records. A military identification card, drivers license, or similar document will be considered suitable identification.

CONTESTING RECORD PROCEDURES:

Contact the addressee under notification procedures and specify the exact information or items you are contesting and provide any documentation that justifies your claim. Correspondence contesting records must include the full name and Social Security Number of the individual concerned.

RECORD SOURCE CATEGORIES:

a. The individual's record from the following systems of records:

(1) Official Officer Service Records, DOT/CG 626

(2) Enlisted Personnel Record System, DOT/CG 629

(3) Official Coast Guard Reserve Service Record, DOT/CG 676.

Information is obtained from the individual, Coast Guard personnel officials, National Oceanic and Atmospheric Administration personnel officials, and the Department of Defense.

EXEMPTIONS CLAIMED FOR THE SYSTEM:

None.

Dated: May 18, 1998.

Eugene K. Taylor, Jr.,

Office of the Chief Information Officer, Department of Transportation.

[FR Doc. 98–13700 Filed 5–21–98; 8:45 am]

BILLING CODE 4910–62–P

DEPARTMENT OF TRANSPORTATION

Federal Aviation Administration

Notice of Intent To Rule on Application To Impose and Use the Revenue From a Passenger Facility Charge (PFC) at the Phoenix Sky Harbor International Airport, Phoenix, Arizona

AGENCY: Federal Aviation Administration (FAA), DOT.

ACTION: Notice of intent to rule on application.

SUMMARY: The FAA proposes to rule and invites public comment on the application to impose and use the revenue from a PFC at Phoenix Sky Harbor International Airport under the provisions of the Aviation Safety and Capacity Expansion Act of 1990 (Title IX of the Omnibus Budget Reconciliation Act of 1990) (Pub. L. 101–508 as recodified by Title 49 U.S.C. 40117(c)(3)) and Part 158 of the Federal Aviation Regulations (14 CFR, Part 158).

DATES: Comments must be received on or before June 22, 1998.

ADDRESSES: Comments on this application may be mailed or delivered in triplicate to the FAA at the following address: Federal Aviation Administration Airports Division, P.O. Box 92007, Worldway Postal Center, Los Angeles, CA 90009.

In addition, one copy of any comments submitted to the FAA must be mailed or delivered to Mr. Neilson A. Bertholf, Jr., Aviation Director, City of Phoenix, 3400 Sky Harbor Blvd., Phoenix, AZ 85034–4420.

Air carriers and foreign air carriers may submit copies of written comments previously provided to the city of Phoenix under section 158.23 of FAR Part 158.

FOR FURTHER INFORMATION CONTACT: Mr. John P. Milligan, Supervisor, Standards Section, Airports Division, 15000 Aviation Blvd., Lawndale, CA 90261, Telephone: (310) 725–3621. The application may be reviewed in person at this same location.

SUPPLEMENTARY INFORMATION: The FAA proposes to rule and invites public comment on the application to impose and use the revenue from a PFC at the Phoenix Sky Harbor International Airport under the provisions of the Aviation Safety and Capacity Expansion Act of 1990 (Title IX of the Omnibus Budget Reconciliation Act of 1990) (Pub. L. 101–508 as recodified by Title 49 U.S.C. 40117 (c)(3)) and Part 158 of the Federal Aviation Regulations (14 CFR Part 158).

On April 30, 1998, the FAA determined that the application to impose and use the revenue from a PFC submitted by the city of Phoenix was substantially complete within the requirements of section 158.25 of Part 158. The FAA will approve or disapprove the application, in whole or in part, no later than July 30, 1998.

The following is a brief overview of application No. 98–05–C–00–PHX.

Level of the Proposed PFC: $3.00.

Proposed Charge Effective Date: October 1, 1998.

Proposed Charge Expiration Date: March 1, 2002.

Total Estimated PFC Revenue: $193,445,920.

Brief description of the proposed projects:

Construct Aircraft Rescue Firefighting Facility (ARFF); Reconstruct Runways 8L/26R and 8R/26L in Concrete; Expand Terminal 4 Facilities; Construct New Taxiway from Taxiway G to the South; Reconstruct Taxiway C in Concrete; Upgrade Aircraft Rescue Firefighting Facility #19; Procure New ARFF Vehicle; Reconstruct Terminal 2 Ramp; Construct Midfield, North/South Taxiway T; Upgrade Airfield Guidance Sign System; Reconstruct Taxiway S; Construct Terminal 4 Holding Apron; Upgrade Airfield Security System.

Class or classes of air carriers which the public agency has requested not be required to collect PFCs: ATCO, Air Taxi/Commercial Operators: CAC, Commuters or Small Certificated Air Carriers with less than 7,500 enplanements each annually: CRAC, Large Certificated Route Air Carriers providing non-scheduled service with less than 7,500 enplanements each annually.

Any person may inspect the application in person at the FAA office listed above under **FOR FURTHER INFORMATION CONTACT**. In addition, any person may, upon request, inspect the application, notice, and other documents germane to the application, in person at the city of Phoenix Aviation Department.

Issued in Hawthorne, California, on May 1, 1998.

Herman C. Bliss,

Manager, Airports Division, Western-Pacific Region.

[FR Doc. 98–13749 Filed 5–21–98; 8:45 am]

BILLING CODE 4910–13–M

DEPARTMENT OF TRANSPORTATION

Federal Aviation Administration

Notice of Intent to Rule on Application (98–03–C–00–HTS) to impose and use the revenue from a passenger facility charge (PFC) at Tri-State Airport, Huntington, West Virginia

AGENCY: Federal Aviation Administration (FAA), DOT.

ACTION: Notice of Intent to Rule on Application.

SUMMARY: The FAA proposes to rule and invites public comment on the application to impose and use the revenue from a PFC at Tri-State Airport under the provisions of the Aviation Safety and Capacity Expansion Act of 1990 (Title IX of the Omnibus Budget Reconciliation Act of 1990) Pub. L. 101–508) and Part 158 of the Federal Aviation Regulations (14 CFR Part 158).

DATES: Comments must be received on or before June 22, 1998.

ADDRESSES: Comments on this application may be mailed or delivered in triplicate to the FAA at the following address:

Mr. Elonza Turner, Beckley Airports Field Office, Main Terminal building, 176 Airport Circle, Beaver, West Virginia 25813–9350.

In addition, one copy of any comments submitted to the FAA must be mailed or delivered to Mr. Larry G. Salyers, Airport Director of the Tri-State Airport Authority at the following address:

Tri-State Airport Authority, 1449 Airport Road, Unit 1, Box, Huntington, West Virginia 26505.

Air carriers and foreign air carriers may submit copies of written comments previously provided to the Tri-State Airport Authority under section 158.23 of Part 158.

FOR FURTHER INFORMATION CONTACT: Mr. Elonza Turner, Beckley Airports Field Office, Main Terminal Building 176 Airport Circle, Beaver, West Virginia 25813–9350 (Tel. 304–252–6216). The application may be reviewed in person at this same location.

SUPPLEMENTARY INFORMATION: The FAA proposes to rule and invites public comment on the application to impose and use the revenue from a PFC at Tri-State Airport under the provisions of the Aviation Safety and Capacity Expansion Act of 1990 (Title IX of the Omnibus Budget Reconciliation Act of 1990) (Pub. L. 101–508) and Part 158 of the Federal Aviation Regulations (14 CFR Part 158).

On April 10, 1998, the FAA determined that the application to impose and use the revenue from a PFC submitted by the Tri-State Airport Authority was substantially complete within the requirements of section 158.25 of Part 158. The FAA will approve or disapprove the application, in whole or in part, no later than July 8, 1998.

The following is a brief overview of the application.

Application number: 98–03–C–00–HTS.

Level of the proposed PFC: $3.00.

Proposed charge effective date: July 1, 1998.

Proposed charge expiration date: August 1, 2000.

Total estimated PFC revenue: $365,138.

Brief description of proposed projects: The PFC funds will be utilized to fund the local share of the following proposed AIP project.

—Design Snow Removal Equipment Building
—Acquire Aircraft Deicing Truck
—Acquire 4-Wheel Drive Pick-up With Snow Plow
—Acquire Security Vehicle
—Acquire Self Propelled Passenger Access Lift
—Construct Snow Equipment Building
—Conduct Drainage/Deicing study
—Reseal/Rehabilitate Airline Ramp

—Drainage Rehabilitation

Class or classes of air carriers which the public agency has requested not be required to collect PFCs: Non-Scheduled Part 135 and Part 121 charter operators.

Any person may inspect the application in person at the FAA office listed above under **FOR FURTHER INFORMATION CONTACT** and at the FAA regional Airports office located at:

Fitzgerald Federal Building, John F. Kennedy International Airport, Jamaica, New York, 11430.

In addition, any person may, upon request, inspect the application, notice and other documents germane to the application in person at the Tri-State Airport Authority.

Issued in Jamaica, New York on May 15, 1998.

Thomas Felix,

Manager, Planning & Programming Branch, Eastern Region.

[FR Doc. 98–13748 Filed 5–21–98; 8:45 am]

BILLING CODE 4910–13–M

DEPARTMENT OF TRANSPORTATION

Federal Railroad Administration

Amtrak Reform Council; Notice of First Meeting

AGENCY: Federal Railroad Administration (FRA), Department of Transportation (DOT).

ACTION: Notice of First Meeting of the Amtrak Reform Council.

SUMMARY: As provided in Section 203 of the Amtrak Reform and Accountability Act of 1997, the Federal Railroad Administration (FRA) gives notice of the first meeting of the Amtrak Reform Council (''ARC''). The purpose of the meeting is to begin to develop a work plan for the ARC, to establish certain administrative procedures, including a process for selection of a chair, and to begin to review Amtrak's current financial and operational structure.

DATES: The first meeting of the ARC is scheduled for 11:00 a.m. to 2:00 p.m. EST on Tuesday, May 26, 1998. Decisions regarding future meetings will be made at the first meeting and from time to time thereafter.

ADDRESSES: The first meeting of the ARC will be held in Room 283 in the Hall of States at 444 North Capitol Street, NW, Washington, DC. The meeting is open to the public on a first-come, first-served basis and is accessible to individuals with disabilities. Persons in need of special arrangements should contact the person whose name is listed below.

FOR FURTHER INFORMATION CONTACT: Arrigo Mongini, Deputy Associate Administrator for Railroad Development, FRA, RDV–2, Mail Stop 20, 400 Seventh Street, SW, Washington, DC 20590 (mailing address only) or by telephone at (202) 632–3286.

SUPPLEMENTARY INFORMATION: The ARC was created by the Amtrak Reform and Accountability Act of 1997 (ARAA) as an independent commission to evaluate Amtrak's performance and make recommendations to Amtrak for achieving further cost containment and productivity improvements, and financial reforms. In addition, the ARAA requires: that the ARC monitor cost savings resulting from work rules established under new agreements between Amtrak and its labor unions; that the ARC provide an annual report to Congress that includes an assessment of Amtrak's progress on the resolution of productivity issues; and that after two years the ARC begin to make findings on whether Amtrak can meet certain financial goals and, if not, to notify the President and the Congress.

The ARAA provides that the ARC consist of eleven members, including the Secretary of Transportation and ten others nominated by the President or Congressional leaders. Each member is to serve a 5 year term.

Issued in Washington, D.C. on May 19, 1998.

Donald M. Itzkoff,

Deputy Administrator.

[FR Doc. 98–13709 Filed 5–21–98; 8:45 am]

BILLING CODE 4910–06–P

DEPARTMENT OF TRANSPORTATION

Surface Transportation Board

[STB Finance Docket No. 33556 [1] et al.]

Railroad Operation, Acquisition, Construction, Etc: Canadian National Railway Co. et al.

AGENCY: Surface Transportation Board.

ACTION: Decision No. 3 in STB Finance Docket No. 32760 (Sub-No. 26) and Decision No. 3 in STB Finance Docket No. 33556; Denial of general waiver.

SUMMARY: The Surface Transportation Board (Board) is denying petitions for reconsideration in these proceedings of the requirement that parties submit copies of all textual materials on diskettes (disks) or compact discs (CDs). Parties may, however, seek individual waivers of the disk filing requirement.

FOR FURTHER INFORMATION CONTACT: Julia M. Farr, (202) 565–1613. [TDD for the hearing impaired: (202) 565–1695.]

SUPPLEMENTARY INFORMATION: On March 26, 1998, Joseph C. Szabo, for and on behalf of the United Transportation Union—Illinois Legislative Board (UTUIL), filed a petition for reconsideration of Decision No. 2 in the STB Finance Docket No. 33556 proceeding served and published in the **Federal Register** on March 13, 1998 (63 FR 12574).[2] On April 20, 1998, UTU Committees [3] filed a petition for reconsideration of Decision No. 1 in the STB Finance Docket No. 32760 (Sub-No. 26) proceeding (formerly Decision No. 12 in STB Finance Docket No. 32760 (Sub-No. 21)), which was served on March 31, 1998, and published in the **Federal Register** on April 3, 1998 (63 FR 16628).[4] The petitions are nearly identical and will be considered together. UTU Committees seek reconsideration of the requirement in these proceedings that all parties submit copies of their textual materials on 3.5 inch IBM-compatible disks or CDs.[5]

---

[1] These proceedings are not consolidated. A single decision is being issued for administrative convenience only. In addition, this oversight matter was recently assigned the Sub-No. 26 docket number and a new case title.

[2] In that decision the Board announced, *inter alia*, that, pursuant to 49 CFR 1180.4(b), Canadian National Railway Company (CNR), Grand Trunk Corporation, and Grand Trunk Western Railroad Incorporated (GTW), Illinois Central Corporation (IC Corp.), Illinois Central Railroad Company (ICR), Chicago, Central and Pacific Railroad Company, and Cedar River Railroad Company (collectively, applicants) had notified us of their intent to file an application seeking authority under 49 U.S.C. 11323–25 for the acquisition of control, by CNR, through its indirect wholly owned subsidiary Blackhawk Merger Sub, Inc., of IC Corp., and through it of ICR and its railroad affiliates, and for the resulting common control by CNR of GTW and its railroad affiliates and ICR and its railroad affiliates. The Board found this to be a major transaction as defined in 49 CFR part 1180.

[3] In what is now STB Finance Docket No. 32760 (Sub-No. 26), the petition for reconsideration was filed by UTU–IL, and by United Transportation Union-General Committee of Adjustment (GO–386), United Transportation Union-General Committee of Adjustment (GO–401), and United Transportation Union-General Committee of Adjustment (ALS). We will refer to the petitioners in both proceedings collectively as UTU Committees.

[4] In that decision, the Board instituted a proceeding as part of the 5-year oversight condition that it imposed in *Union Pacific Corporation, Union Pacific Railroad Company, and Missouri Pacific Railroad Company—Control and Merger—Southern Pacific Rail Corporation, Southern Pacific Transportation Company, St. Louis Southwestern Railway Company, SPCSL Corp., and The Denver and Rio Grande Western Railroad Company*, Finance Docket No. 32760 (*UP/SP Merger*), Decision No. 44 (STB served Aug. 12, 1996), to examine additional remedial conditions to the UP/SP merger as they pertain to rail service in the Houston, Texas/Gulf Coast region.

[5] In Decision No. 2 at 3 and Decision No. 1 at 3, we directed that:

[i]n addition to submitting an original and 25 copies of all paper documents filed with the Board, the parties shall also submit, on diskettes or

Applicants in STB Finance Docket No. 33556 filed a reply opposing the relief sought by UTU Committees.

We stated in Decision No. 2 and Decision No. 1 that the submission of computer data on disks and CDs was needed for the efficient review of filings by the Board and our staff. We found that the disk/CD requirement superseded for these proceedings the otherwise applicable electronic filing requirements in *Expedited Procedures for Processing Rail Rate Reasonableness, Exemption and Revocation Proceedings*, STB Ex Parte No. 527 (STB served Oct. 1, 1996 and Nov. 15, 1996), *aff'd sub nom. United Transp. Union—Ill. Legis. Bd.* v. *STB et al.*, 132 F.3d 71 (D.C. Cir. 1998) (Ex Parte No. 527) and codified at 49 CFR 1104.3(a). Those rules require parties to submit computer disks for pleadings of 20 or more pages and for spreadsheets.[6]

UTU Committees contend that mandating that all textual material be filed on disks constitutes material error. They argue that, by superseding the applicable disk rule at 49 CFR 1104.3(a), our disk/CD requirement in STB Finance Docket Nos. 32760 (Sub-No. 26) and 33556 precludes meaningful participation in those cases by railroad employees as well as the general public. They allege that many railway employees do not have access to computers, and they would not be able to provide copies of disks to the many parties likely to participate in the proceeding.[7] They argue, moreover, that the burdens on local labor units will prevent them from actively participating, which, they assert, would be a denial of due process.

UTU Committees also claim that the requirements of Decision No. 2 and Decision No. 1 are inconsistent with the Ex Parte No. 527 procedures because disks will contain more rather than less information than the paper filings, and they are required for all filings, not just lengthy ones. They also contend that there is no waiver provision for the Decision No. 2 and Decision No. 1 disk/CD requirement. UTU Committees ask that we reconsider the mandatory disk requirement and restore application of the section 1104.3 rule.[8]

Finally, UTU Committees argue that the Board may have always intended that there be an absolute disk requirement, and ''the 20-page rule may have been merely an interim scheme to promote such a result.'' It also claims that the real reason for the rule is to inhibit participation by employees and ''to curry favor with carriers * * *.''

In response to UTU Committee's petition, applicants in STB Finance Docket No. 33556 assert that the effort and expense needed to create a disk is minimal whether the submission is lengthy or less than 20 pages. Further, they assert that where a party does not have access to a word processor, it should file an individual request for a waiver.

Discussion and Conclusions

We will deny the petitions for reconsideration, but we will permit individual parties to seek a waiver of the disk/CD requirement. With this safeguard, we believe that the need to efficiently and expeditiously analyze the anticipated large number of filings outweighs the burden on parties of filing disks.

While the disk/CD requirement in these proceedings broadens the regulation issued in Ex Parte No. 527, we believe that its purpose and its procedures are compatible with the 20-page rule. The Board issued the 20-page rule to assist the agency in its ''task of reviewing and analyzing voluminous records.'' October 1 decision at 2–3. In the context of that rule, ''voluminous'' referred to the length of the filing. Nevertheless, in situations such as merger proceedings where the *number* of pleadings can also be described as voluminous and where decisions must be issued promptly, we believe that imposing the disk requirement for all paper filings will enable the Board and our staff to efficiently review case filings.[9] The 20-page rule is not an ''interim scheme,'' but the STB Finance Docket No. 33556 merger and the UP/SP Houston/Gulf Coast Oversight by their natures have made us more dependent on electronic media.[10] The use of disk/CDs in STB Finance Docket No. 33556 will help us reach a decision on the merits within the applicable statutory deadlines (*see* 49 U.S.C. 11325), and, in STB Finance Docket No. 32760 (Sub-No. 26), their use will assist us in issuing a decision as soon as possible after the record closes. Utilizing disks is consistent with the practice we have followed in other recent mergers where we ''encouraged'' or ''requested'' the filing of disks.[11]

We also believe that submitting a disk does not constitute a hardship, unless the party does not have access to a word processor or there is some other reason why filing would be difficult.[12] In those situations, consistent with Ex Parte No. 527, such parties may seek a waiver of the disk filing requirement.[13] UTU Committees contend that, while under 49 CFR 1110.9, any person may seek a waiver of a rule, the disk/CD requirement in this proceeding is not a ''rule'' and thus a waiver is not available. We note, however, that, under 49 CFR 1100.3, our rules are to be

compact discs, copies of all textual materials * * *. Data must be submitted on 3.5 inch IBM-compatible floppy diskettes or compact discs.

Parties were also directed to submit ''electronic workpapers, data bases, and spreadsheets'' on disks or CDs. We also stated that a copy of each disk or CD should be given to any other party upon request.

[6] Section 1104.3 reads in relevant part:

(a) * * * In addition to the paper copies required to be filed with the Board, 3 copies of:

(1) Textual submissions of 20 or more pages; and

(2) All electronic spreadsheets should be submitted on 3.5 inch, IBM compatible formatted diskettes or QIC–80 tapes. Textual materials must be in WordPerfect 5.1 format, and electronic spreadsheets must be in LOTUS 1–2–3 release 5 or earlier format. One copy of each such computer diskette or tape submitted to the Board should, if possible, be provided to any other party requesting a copy.

[7] We note that, under our Decision No. 2 and Decision No. 1 procedures, electronic copies are provided only upon request of another party, and under 49 CFR 1104.3, the requested disks are only provided to other parties ''if possible.''

[8] UTU Committees also request that, if the waiver provision is available, that the Board waive the disk/CD requirement and reinstate the 20-page disk rule.

[9] While STB Finance Docket No. 32760 (Sub-No. 26) is not a merger proceeding but a merger oversight case, we still anticipate a large number of filings, and we must issue a decision in as timely manner as possible.

[10] For these reasons, the assertion that the disk requirement was intended to prevent participation by employees or to win the favor of railroads is baseless.

[11] See *Union Pacific Corporation, Union Pacific Railroad Company, and Missouri Pacific Railroad Company—Control and Merger—Southern Pacific Rail Corporation, Southern Pacific Transportation Company, St. Louis Southwestern Railway Company, SPCSL Corp., and The Denver and Rio Grande Western Railroad Company*, Finance Docket No. 32760 (STB served Sept. 1, 1995); *CSX Corporation and CSX Transportation, Inc., Norfolk Southern Corporation and Norfolk Southern Railway Company—Control and Operating Leases/Agreements—Conrail Inc. and Consolidated Rail Corporation*, STB Finance Docket No. 33388 (STB served May 30, 1997); and *Burlington Northern Inc. and Burlington Northern Railroad Company—Control and Merger—Santa Fe Pacific Corporation and The Atchison, Topeka and Santa Fe Railway Company*, Finance Docket No. 32549 (STB served Aug. 5, 1994).

[12] In STB Finance Docket No. 32760 (Sub-No. 26), UTU Committees claim that not only railroad employees, but ''other public parties'' would be harmed by requiring disks. They contend that a majority of such parties did not file disks in response to the decision in *Review of Rail Access and Competition Issues*, STB Ex Parte No. 575 (STB served Mar. 20, 1998). We believe that the disk filing requirement is reasonable. No other party has objected to it. Moreover, as discussed *infra*, the ability to file a waiver request should ameliorate any harm.

[13] The Court in Ex Parte No. 527 stated that ''UTU complains that the waiver rule denies due process to the union and to rail employees who do not have the necessary computer equipment or expertise to submit a disk * * *. We do not doubt, therefore, that the availability of the waiver provision adequately protects a party for whom compliance with the rule would be burdensome.'' 132 F.3d at 75.

liberally construed ''to secure just, speedy, and inexpensive determination of the issues presented.'' Accordingly, any person may seek a waiver of the disk/CD requirement in these proceedings. Parties should file the waiver request with the paper version of its filing, and we can rule upon the waiver even after the filing date.[14]

Finally, we are not sure how UTU Committees' argument that disks can contain more information than paper filings relates to the issue of the hardship of filing disks. In any event, in Decisions No. 1 and 2, we required that ''copies of all textual materials'' are to be submitted on disks. These disks are the electronic version or counterpart of the textual paper filing. The paper copy remains the official record. Thus, for the reasons discussed above, we are denying the petitions for reconsideration.

Board decisions and notices are available on our website at ''WWW.STB.DOT.GOV.''

This action will not significantly affect either the quality of the human environment or the conservation of energy resources.

It is ordered:

1. UTU Committees' petitions for reconsideration are denied. Parties may individually seek a waiver from the disk/CD requirement.

2. This decision is effective on the service date.

Decided: May 14, 1998.

By the Board, Chairman Morgan and Vice Chairman Owen.

Vernon A. Williams,

Secretary.

[FR Doc. 98–13776 Filed 5–21–98; 8:45 am]

BILLING CODE 4915–00–P

[14] As noted, UTU Committees indicate that, if the waiver provision is available, it seeks to have us waive the disk/CD requirement. We are not sure whether this request is being made on behalf of UTU Committees, local units, or individual railroad employees, or some combination of the above. UTU Committees maintain that in many cases railway employees lack access to computers. In those instances where this is true, there would appear to be valid grounds for a waiver, but each situation is best addressed on its own merits.

DEPARTMENT OF TRANSPORTATION

Surface Transportation Board

[STB Finance Docket No. 32760 (Sub–No. 26 [1]) [2]]

Union Pacific Corporation, Union Pacific Railroad Company, and Missouri Pacific Railroad Company; Control and Merger; Southern Pacific Rail Corporation, Southern Pacific Transportation Company, St. Louis Southwestern Railway Company, SPCSL Corp., and the Denver and Rio Grande Western Railroad Company; Houston/Gulf Coast Oversight

AGENCY: Surface Transportation Board.

ACTION: Corrected Decision; Decision No. 1; Notice of Houston/Gulf Coast Oversight Proceeding. Requests for Additional Conditions to the UP/SP Merger for the Houston, Texas/Gulf Coast Area.

SUMMARY: Pursuant to a petition filed February 12, 1998, by the Texas Mexican Railway Company and the Kansas City Southern Railway Company (Tex Mex/KCS) and a request filed March 6, 1998, by the Greater Houston Partnership (GHP), the Board is instituting a proceeding as part of the 5-year oversight condition that it imposed in Union Pacific Corporation, Union Pacific Railroad Company, and Missouri Pacific Railroad Company—Control and Merger—Southern Pacific Rail Corporation, Southern Pacific Transportation Company, St. Louis Southwestern Railway Company, SCPSL Corp., and The Denver and Rio Grande Western Railroad Company, Finance Docket No. 32760 (UP/SP Merger), Decision No. 44 (STB served Aug. 12, 1996), to examine their requests, and others that may be made, for additional remedial conditions to the UP/SP merger as they pertain to rail service in the Houston, Texas/Gulf Coast region. The Board is establishing a procedural schedule (attached) for the submission of evidence, replies, and rebuttal. The Board requests that persons intending to participate in this oversight proceeding notify the agency of that intent. A separate service list will be issued based on the notices of intent to participate that the Board receives.

DATES: The proceeding will commence on June 8, 1998. On that date, all interested parties must file requests for new remedial conditions to the UP/SP merger regarding the Houston/Gulf Coast area, along with all supporting evidence. The Board will publish a notice of acceptance of requests for new conditions in the **Federal Register** by July 8, 1998. Notices of intent to participate in the oversight proceeding are due July 22, 1998. All comments, evidence, and argument opposing the requested new conditions are due August 10, 1998. Rebuttal in support of the requested conditions is due September 8, 1998. The full procedural schedule is set forth at the end of this decision.

ADDRESSES: An original plus 25 copies [3] of all documents, referring to STB Finance Docket No. 32760 (Sub-No. 26), must be sent to the Office of the Secretary, Case Control Unit, ATTN: STB Finance Docket No. 32760 (Sub-No. 26), Surface Transportation Board, 1925 K Street, N.W., Washington, DC 20423–0001.

Electronic Submissions. In addition to an original and 25 copies of all paper documents filed with the Board, the parties shall also submit, on 3.5 inch IBM-compatible diskettes or compact discs, copies all textual materials, electronic workpapers, data bases and spreadsheets used to develop quantitative evidence. Textual material must be in, or convertible by and into, WordPerfect 7.0. Electronic spreadsheets must be in, or convertible by and into, Lotus 1–2–3 97 Edition, Excel Version 7.0, or Quattro Pro Version 7.0.

The data contained on the diskettes or compact discs submitted to the Board may be submitted under seal (to the extent that the corresponding paper copies are submitted under seal), and will be for the exclusive use of Board employees reviewing substantive and/or procedural matters in this proceeding. The flexibility provided by such computer data is necessary for efficient review of these materials by the Board

[1] This decision corrects the decision served March 31, 1998, and published in the **Federal Register** on April 3, 1998 (63 FD 16628) by designating the docket number for this, the Houston/Gulf Coast Oversight proceeding, as Finance Docket No. 32760 (Sub-No. 26), rather than (Sub-No. 21); designating this decision as Decision No. 1; and designating the short name of this proceeding as HOUSTON/GULF COAST OVERSIGHT. All other aspects of the corrected decision remain unchanged, including the procedural schedule.

[2] This decision embraces the proceeding in Finance Docket No. 32760, Union Pacific Corporation, Union Pacific Railroad Company, and Missouri Pacific Railroad Company—Control and Merger—Southern Pacific Rail Corporation, Southern Pacific Transportation Company, St. Louis Southwestern Railway Company, SPCSL Corp., and The Denver and Rio Grande Western Railroad Company.

[3] In order for a document to be considered a formal filing, the Board must receive an original plus 25 copies of the document, which must show that it has been properly served. As in the past, documents transmitted by facsimile (FAX) will not be considered formal filings and thus are not acceptable.

and its staff. The electronic submission requirements set forth in this decision supersede, for the purposes of this proceeding, the otherwise applicable electronic submission requirements set forth in our regulations. See 49 CFR 1104.3(a), as amended in Expedited Procedures for Processing Rail Rate Reasonableness, Exemption and Revocation Proceedings, STB Ex Parte No. 527, 61 FR 52710, 711 (Oct. 8, 1996), 61 FR 58490, 58491 (Nov. 15, 1996).[4]

FOR FURTHER INFORMATION CONTACT: Joseph H. Dettmar, (202) 565–1600. [TDD for the hearing impaired: (202) 565–1695.]

SUPPLEMENTARY INFORMATION: In UP/SP Merger, Decision No. 44, served August 12, 1996, the Board approved the common control and merger of the rail carriers controlled by Union Pacific Corporation (Union Pacific Railroad Company and Missouri Pacific Railroad Company) and the rail carriers controlled by Southern Pacific Rail Corporation (Southern Pacific Transportation Company, St. Louis Southwestern Railway Company, SPCSL Corp., and the Denver and Rio Grande Western Railroad Company) (collectively UP/SP), subject to various conditions. Common control was consummated on September 11, 1996. The Board imposed a 5-year oversight condition to examine whether the conditions imposed on the merger effectively addressed the competitive concerns they were intended to remedy, and retained jurisdiction to impose, as necessary, additional remedial conditions if the Board determined that the conditions already imposed were shown to be insufficient. In its initial oversight proceeding, the Board concluded that, while it was still too early to tell, there was no evidence at the time that the merger, with the conditions that the agency had imposed, had caused any adverse competitive consequences.[5] Nevertheless, the Board indicated that its oversight would be ongoing, and that it would continue vigilant monitoring.[6]

UP/SP has experienced serious service difficulties since the merger, and the Board has issued a series of orders under 49 U.S.C. 11123, effective through August 2, 1998, to mitigate a rail service crisis in the western United States caused, in large measure, by severely congested UP/SP lines in the Houston/Gulf Coast region.[7] In acting to relieve some of the congestion, the Board made substantial temporary changes to the way in which service is provided in and around Houston.[8] The Board found that, although merger implementation issues were involved, a key factor in bringing about the service emergency was the inadequate rail facilities and infrastructure in the region, and, as such, also ordered UP/SP, BNSF, and other involved railroads to submit to the Board their plans to remedy these inadequacies.[9]

Recognizing the limitations on its authority under the emergency service provisions of the law, the Board rejected proposals offered by certain shipper, carrier, and governmental interests in the Service Order No. 1518 proceeding to force UP/SP to transfer some of its lines to other rail carriers and effect a permanent alteration of the competitive situation in the Houston region; it adopted instead only those measures designed to facilitate short-term solutions to the crisis that did not further aggravate congestion in the area or create additional service disruptions. The Board declared, however, that interested persons could present proposals for longer-term solutions to the service situation—including those seeking structural industry changes based on perceived competitive inadequacies—in formal proceedings outside of section 11123, particularly in the UP/SP merger oversight process.[10] Tex Mex/KCS has now requested that we invoke our oversight jurisdiction over the merger for the purpose of considering such proposals, including the transfer to it of various UP/SP lines and yards in Texas.[11] GHP has also requested the Board's intervention to provide for Houston's long-term rail service needs, including the establishment of a neutral switching operation.

That the service emergency in the Houston/Gulf Coast region remains ongoing is well known.[12] Given these circumstances, the Board will invoke its oversight jurisdiction over the UP/SP merger to consider new conditions to the merger of the kind proposed here, and others that may be made. We note that no party as yet has seriously suggested that SP's inadequate infrastructure would not have produced severe service problems in the Houston/Gulf Coast area even if there had been no merger. Nonetheless, the Board believes that, given the gravity of the service situation, it should thoroughly explore anew the legitimacy and viability of longer-term proposals for new conditions to the merger as they pertain to service and competition in that region.

UP/SP and BNSF argue that Tex Mex/KCS' request for conditions that have been previously rejected, without any new evidentiary justification, is insufficient grounds for the Board to begin a new oversight proceeding. We disagree. Our 5-year oversight of the UP/SP merger is not a static process, but a continuing one, so that the Board's prior rejection of Tex Mex/KCS' or any other party's requested conditions—whether in the Board's approval of the merger or in a subsequent oversight proceeding—does not preclude their fresh consideration now. Through our oversight condition, we have retained jurisdiction to monitor the competitive consequences of this merger; to re-examine whether our imposed conditions have effectively addressed the consequences they were intended to remedy; and to impose additional

[4] A copy of each diskette or compact disc submitted to the Board should be provided to any other party upon request.

[5] Union Pacific Corporation, Union Pacific Railroad Company and Missouri Pacific Railroad Company—Control and Merger—Southern Pacific Rail Corporation, Southern Pacific Transportation Company, St. Louis Southwestern Railway Company, SPCSL Corp., and The Denver and Rio Grande Western Railroad Company, Finance Docket No. 32760 (Sub-No. 21), Decision No. 10 (STB served Oct. 27, 1997) (UP/SP Oversight).

[6] UP/SP Oversight, Decision No. 10, at 2–3.

[7] STB Service Order No. 1518, *Joint Petition for Service Order* (Service Order No. 1518) (STB served Oct. 31 and Dec. 4, 1997, and Feb. 17 and 25, 1998).

[8] The Board directed UP/SP to release shippers switched by the Houston Belt & Terminal Railway Company (HB&T) or the Port Terminal Railroad Association (PTRA) from their contracts so that they could immediately route traffic over the Burlington Northern and Santa Fe Railway Company (BNSF) or Tex Mex, in addition to UP/SP. The agency also directed UP/SP to permit BNSF and Tex Mex to modify their operations over UP/SP lines to minimize congestion over UP/SP's ''Sunset Line,'' to move traffic around Houston rather than going through it, and to have full access to UP/SP's Spring, TX dispatching facility as neutral observers. More generally, the Board required UP/SP to cooperate with other railroads and to accept assistance from other railroads able to handle UP/SP traffic.

UP/SP and BNSF recently have agreed to make other changes designed to improve service. In particular, the carriers have agreed to joint ownership of the Sunset Line between Avondale (New Orleans), LA and Houston; joint dispatching in the Houston area; and overhead trackage rights for UP/SP over the BNSF line between Beaumont and Navasota, TX.

[9] Service Order No. 1518, Feb. 17, 1998 decision, at 5–7; Feb. 25, 1998 decision, at 5. The railroads' plans are due May 1, 1998; replies are due June 1.

[10] Service Order No. 1518, Feb. 17, 1998 decision, at 8; see also Feb. 25, 1998 decision, at 4.

[11] The Railroad Commission of Texas (RCT) has previously announced its intent to seek similar relief. See Service Order No. 1518, Feb. 17, 1998 decision, at 8.

[12] In its progress report of March 9, 1998, UP/SP announced that it would take drastic action in 30 days—including the refusal of new business and the transfer of existing business to its competitors—if the steps it has taken to deal with the emergency are not successful. On March 24, 1998, the carrier announced an embargo of a significant portion of its southbound traffic destined for the Laredo, TX gateway to clear a backlog of 5,500 cars waiting to cross into Mexico.

remedial conditions if those previously afforded prove insufficient, including, if necessary, divestiture of certain of the merged carriers' property.

The virtual shutdown of rail service in the Houston/Gulf Coast area that occurred after the UP/SP merger—and which, after many months, has yet to be normalized—is unprecedented. In our judgment, those circumstances alone are sufficient for the Board to commence this proceeding now. Clearly, our 5-year oversight jurisdiction permits us to examine—and, if necessary, re-examine at any time during this period—whether there is any relationship between the market power gained by UP/SP through the merger and the failure of service that has occurred here, and, if so, whether the situation should be addressed through additional remedial conditions. UP/SP Merger, Decision No. 44, at 100.

We caution, however, that we will not impose conditions requiring UP/SP to divest property that would substantially change the configuration and operations of its existing network in the region in the absence of the type of presentation and evidence required for ''inconsistent applications'' in a merger proceeding; *i.e.*, parties must present probative evidence that discloses ''the full effects of their proposals.'' UP/SP Merger, Decision No. 44, at 157. Divestiture is only available ''when no other less intrusive remedy would suffice,'' and we will impose it only upon sufficient evidentiary justification. *Id.*

The Board will confine this proceeding under its continuing oversight jurisdiction to examining requests for new conditions to the merger relating to rail service in the Houston/Gulf Coast area. As we have noted, the service crisis in this region, and its significant impact on the regional economy, clearly warrant our discrete treatment of these matters now. As a result, the procedures set forth here will be separate from those in the more general oversight proceeding that, pursuant to UP/SP Oversight, Decision No. 10, will begin July 1, 1998.[13]

As set forth in the attached schedule, parties that wish to request new remedial conditions to the UP/SP merger as they pertain to the Houston/Gulf Coast region must file them, along with their supporting evidence, by June 8, 1998.[14] The Board will publish a notice in the **Federal Register** accepting such requests by July 8, 1998. Any person who intends to participate actively in this facet of oversight as a ''party of record'' (POR) must notify us of this intent by July 22, 1998. In order to be designated a POR, a person must satisfy the filing requirements discussed above in the **ADDRESSES** section. We will then compile and issue a final service list.

Copies of decisions, orders, and notices will be served only on those persons designated as POR, MOC (Members of Congress), and GOV (Governors) on the official service list. Copies of filings must be served on all persons who are designated as POR. We note that Members of the United States Congress and Governors who are designated MOC and GOV are not parties of record and they need not be served with copies of filings; however, those who are designated as a POR must be served with copies of filings. All other interested persons are encouraged to make advance arrangements with the Board's copy contractor, DC News & Data, Inc. (DC News), to receive copies of Board decisions, orders, and notices served in this proceeding. DC News will handle the collection of charges and the mailing and/or faxing of decisions to persons who request this service. The telephone number for DC News is: (202) 289–4357.

A copy of this decision is being served on all persons designated as POR, MOC, or GOV on the service list in Finance Docket No. 32760 (Sub-No. 21). This decision will serve as notice that persons who were parties of record in the previous oversight proceeding (leading to Decision No. 10) will not automatically be placed on the service list as parties of record for this facet of oversight unless they notify us of their intent to participate further.

Finally, while the requested remedial conditions (and those reasonably anticipated from other parties) could, if imposed, result in a transfer of ownership of certain UP/SP rail property or changes in the way that such properties are operated, they appear unlikely to produce the kind of significant operational changes that, under 49 CFR 1105.6(b)(4), require the filing of a preliminary draft environmental assessment (PDEA).

This action will not significantly affect either the quality of the human environment or the conservation of energy resources.

Decided: March 30, 1998.

By the Board, Chairman Morgan and Vice Chairman Owen.

Vernon A. Williams,

Secretary.

Procedural Schedule

June 8, 1998
Requests for new remedial conditions (with supporting evidence) filed.

July 8, 1998
Board notice of acceptance of requests for new conditions published in the **Federal Register**.

July 22, 1998
Notice of intent to participate in proceeding due.

August 10, 1998
All comments, evidence, and argument opposing requests for new remedial conditions to the merger due. Comments by U.S. Department of Justice and U.S. Department of Transportation due.

September 8, 1998
Rebuttal evidence and argument in support of requests for new conditions due.

The necessity of briefing, oral argument, and voting conference will be determined after the Board's review of the pleadings.

[FR Doc. 98–13775 Filed 5–21–98; 8:45 am]

BILLING CODE 4910–00–P

[13] In Decision No. 10, at 18–19, the Board provided that general oversight would commence July 1 upon the filing by UP/SP and BNSF of their quarterly merger progress reports accompanied by comprehensive summary presentations. We provided that, as part of that proceeding, UP/SP and BNSF must make their 100% traffic tapes available by July 15, 1998; that comments of interested parties concerning oversight issues are due August 14, 1998; and that replies are due September 1, 1998. The general oversight proceeding will continue as planned.

[14] Tex Mex/KCS stated that it would file its supporting evidence 45 days after its petition. Petition at 5. If it does so, it need not file its evidence anew on June 8th, although it may supplement its filing as appropriate. We decline, however, petitioner's request (Petition at 11 n.6) to incorporate by reference its pleadings in Finance Docket Nos. 33507, 33461, 33462, and 33463 (titles omitted). In those proceedings, Tex Mex/KCS has complained that, after the merger, UP/SP (either singly or jointly with BNSF) unlawfully acquired control of HB&T in violation of 49 U.S.C. 11323, and has petitioned that a series of exemptions the carriers filed to restructure HB&T's operations leading to that control should be voided and/or revoked. We will proceed to consider the discrete matters in those cases—including Tex Mex/KCS' petition for consolidation and motion to compel discovery, and UP/SP's motion to dismiss—separately from our consideration in this oversight proceeding of requests by Tex Mex/KCS and others for new remedial conditions to the merger.

DEPARTMENT OF TRANSPORTATION

Surface Transportation Board

[STB Docket No. AB–167 (Sub–No. 1183X)]

Consolidated Rail Corporation; Abandonment Exemption; in Philadelphia County, PA

Consolidated Rail Corporation (Conrail) has filed a notice of exemption under 49 CFR 1152 Subpart F—*Exempt Abandonments* to abandon a 0.42-mile portion of the Berks Street Industrial Track between milepost 2.98± and milepost 3.40±, in the City of

Philadelphia, Philadelphia County, PA. The line traverses United States Postal Service Zip Code 19140.

Conrail has certified that: (1) No local traffic has moved over the line for at least 2 years; (2) there is no overhead traffic moving over the line; (3) no formal complaint filed by a user of rail service on the line (or by a state or local government entity acting on behalf of such user) regarding cessation of service over the line either is pending with the Surface Transportation Board (Board) or with any U.S. District Court or has been decided in favor of complainant within the 2-year period; and (4) the requirements at 49 CFR 1105.7 (environmental reports), 49 CFR 1105.8 (historic reports), 49 CFR 1105.11 (transmittal letter), 49 CFR 1105.12 (newspaper publication), and 49 CFR 1152.50(d)(1) (notice to governmental agencies) have been met.

As a condition to this exemption, any employee adversely affected by the abandonment shall be protected under *Oregon Short Line R. Co.—Abandonment— Goshen,* 360 I.C.C. 91 (1979). To address whether this condition adequately protects affected employees, a petition for partial revocation under 49 U.S.C. 10502(d) must be filed. Provided no formal expression of intent to file an offer of financial assistance (OFA) has been received, this exemption will be effective on June 21, 1998, unless stayed pending reconsideration. Petitions to stay that do not involve environmental issues,[1] formal expressions of intent to file an OFA under 49 CFR 1152.27(c)(2),[2] and trail use/rail banking requests under 49 CFR 1152.29 must be filed by June 1, 1998. Petitions to reopen or requests for public use conditions under 49 CFR 1152.28 must be filed by June 11, 1998, with: Surface Transportation Board, Office of the Secretary, Case Control Unit, 1925 K Street, NW, Washington, DC 20423.

A copy of any petition filed with the Board should be sent to applicant's representative: John J. Paylor, Associate General Counsel, Consolidated Rail Corporation, 2001 Market Street—16A, Philadelphia, PA 19101–1416.

If the verified notice contains false or misleading information, the exemption is void *ab initio*.

Conrail has filed an environmental report which addresses the abandonment's effects, if any, on the environment and historic resources. The Section of Environmental Analysis (SEA) will issue an environmental assessment (EA) by May 27, 1998. Interested persons may obtain a copy of the EA by writing to SEA (Room 500, Surface Transportation Board, Washington, DC 20423) or by calling SEA, at (202) 565–1545. Comments on environmental and historic preservation matters must be filed within 15 days after the EA becomes available to the public.

Environmental, historic preservation, public use, or trail use/rail banking conditions will be imposed, where appropriate, in a subsequent decision.

Pursuant to the provisions of 49 CFR 1152.29(e)(2), Conrail shall file a notice of consummation with the Board to signify that it has exercised the authority granted and fully abandoned the line. If consummation has not been effected by Conrail's filing of a notice of consummation by May 22, 1999, and there are no legal or regulatory barriers to consummation, the authority to abandon will automatically expire.

Board decisions and notices are available on our website at ''WWW.STB.DOT.GOV.''

Decided: May 15, 1998.

By the Board, David M. Konschnik, Director, Office of Proceedings.

Vernon A. Williams,

Secretary.

[FR Doc. 98–13774 Filed 5–21–98; 8:45 am]

BILLING CODE 4915–00–P

[1] The Board will grant a stay if an informed decision on environmental issues (whether raised by a party or by the Board's Section of Environmental Analysis in its independent investigation) cannot be made before the exemption's effective date. See *Exemption of Out-of-Service Rail Lines,* 5 I.C.C.2d 377 (1989). Any request for a stay should be filed as soon as possible so that the Board may take appropriate action before the exemption's effective date.

[2] Each offer of financial assistance must be accompanied by the filing fee, which currently is set at $1000. See 49 CFR 1002.2(f)(25).

DEPARTMENT OF TRANSPORTATION

Surface Transportation Board

[STB Docket No. AB–468 (Sub-No. 3X)]

Paducah & Louisville Railway, Inc.; Abandonment Exemption; in Muhlenberg County, KY

On May 5, 1998, Paducah & Louisville Railway, Inc. (P&L) filed with the Surface Transportation Board (Board) a petition under 49 U.S.C. 10502 for exemption from the provisions of 49 U.S.C. 10903 to abandon: (1) 6.70 miles of rail line between milepost J–126.6 at Central City, KY (JK Jct.), and milepost J–133.3 at Greenville, KY; and (2) 6.14 miles of branch line trackage known as the Beech Creek Lead, between Greenville and Pond Creek, KY, in Muhlenberg County, KY. The lines traverse U.S. Postal Service Zip Codes 42330, 42337, 42345 and 42367. The lines include the stations of JK Jct. at milepost J–126.7 and Pond Creek at milepost J–133.1.

The lines do not contain federally granted rights-of-way. Any documentation in the railroad's possession will be made available promptly to those requesting it. The interest of railroad employees will be protected by the conditions set forth in *Oregon Short Line R. Co.—Abandonment—Goshen,* 360 I.C.C. 91 (1979).

By issuance of this notice, the Board is instituting an exemption proceeding pursuant to 49 U.S.C. 10502(b). A final decision will be issued by August 21, 1998.

Any offer of financial assistance (OFA) under 49 CFR 1152.27(b)(2) will be due no later than 10 days after service of a decision granting the petition for exemption. Each OFA must be accompanied by a $1,000 filing fee. See 49 CFR 1002.2(f)(25).

All interested persons should be aware that, following abandonment of rail service and salvage of the lines, the lines may be suitable for other public use, including interim trail use. Any request for a public use condition under 49 CFR 1152.28 or for trail use/rail banking under 49 CFR 1152.29 will be due no later than June 11, 1998. Each trail use request must be accompanied by a $150 filing fee. See 49 CFR 1002.2(f)(27).

All filings in response to this notice must refer to STB Docket No. AB–468 (Sub-No. 3X) and must be sent to: (1) Surface Transportation Board, Office of the Secretary, Case Control Unit, 1925 K Street, NW., Washington, DC 20423–0001, and (2) J. Thomas Garrett, 1500 Kentucky Avenue, Paducah, KY 42003. Replies to the P&L petition are due on or before June 11, 1998.

Persons seeking further information concerning abandonment procedures may contact the Board's Office of Public Services at (202) 565–1592 or refer to the full abandonment or discontinuance regulations at 49 CFR part 1152. Questions concerning environmental issues may be directed to the Board's Section of Environmental Analysis (SEA) at (202) 565–1545. [TDD for the hearing impaired is available at (202) 565–1695.]

An environmental assessment (EA) (or environmental impact statement (EIS), if necessary) prepared by SEA will be served upon all parties of record and upon any agencies or other persons who commented during its preparation. Other interested persons may contact SEA to obtain a copy of the EA (or EIS).

EAs in these abandonment proceedings normally will be available within 60 days of the filing of the petition. The deadline for submission of comments on the EA will generally be within 30 days of its service.

Board decisions and notices are available on our website at WWW.STB.DOT.GOV.''

Decided: May 14, 1998.

By the Board, David M. Konschnik, Director, Office of Proceedings.

Vernon A. Williams,

Secretary.

[FR Doc. 98–13594 Filed 5–21–98; 8:45 am]

BILLING CODE 4915–00–P

DEPARTMENT OF THE TREASURY

Customs Service

Proposed Collection; Comment Request; Declaration of Ultimate Consignee That Articles Were Exported for Temporary Scientific or Educational Purposes

ACTION: Notice and request for comments.

SUMMARY: As part of its continuing effort to reduce paperwork and respondent burden, Customs invites the general public and other Federal agencies to comment on an information collection requirement concerning Declaration of Ultimate Consignee That Articles Were Exported for Temporary Scientific or Educational Purposes. This request for comment is being made pursuant to the Paperwork Reduction Act of 1995 (Pub. L. 104–13; 44 U.S.C. 3505(c)(2)).

DATES: Written comments should be received on or before July 21, 1998, to be assured of consideration.

ADDRESSES: Direct all written comments to U.S. Customs Service, Information Services Group, Room 3.2C, Attn.: J. Edgar Nichols, 1300 Pennsylvania Avenue, NW, Washington, D.C. 20229.

FOR FURTHER INFORMATION CONTACT: Requests for additional information should be directed to U.S. Customs Service, Attn.: J. Edgar Nichols, Room 3.2C, 1300 Pennsylvania Avenue NW, Washington, D.C. 20229, Tel. (202) 927–1426.

SUPPLEMENTARY INFORMATION: Customs invites the general public and other Federal agencies to comment on proposed and/or continuing information collections pursuant to the Paperwork Reduction Act of 1995 (Pub. L. 104–13; 44 U.S.C. 3505(c)(2)). The comments should address: (1) Whether the collection of information is necessary for the proper performance of the functions of the agency, including whether the information shall have practical utility; (b) the accuracy of the agency's estimates of the burden of the collection of information; (c) ways to enhance the quality, utility, and clarity of the information to be collected; (d) ways to minimize the burden including the use of automated collection techniques or the use of other forms of information technology; and (e) estimates of capital or start-up costs and costs of operations, maintenance, and purchase of services to provide information. The comments that are submitted will be summarized and included in the Customs request for Office of Management and Budget (OMB) approval. All comments will become a matter of public record. In this document Customs is soliciting comments concerning the following information collection:

Title: Declaration of Ultimate Consignee That Articles Were Exported for Temporary Scientific or Educational Purposes.

OMB Number: 1515–0104.

Form Number: N/A.

Abstract: The ''Declaration of Ultimate Consignee that Articles were Exported for Temporary Scientific or Educational Purposes'' is used to provide duty free entry under conditions when articles are temporarily exported solely for scientific or educational purposes.

Current Actions: There are no changes to the information collection. This submission is being submitted to extend the expiration date.

Type of Review: Extension (without change).

Affected Public: Businesses, individuals, institutions.

Estimated Number of Respondents: 55.

Estimated Time Per Respondent: 30 minutes.

Estimated Total Annual Burden Hours: 27.

Estimated Total Annualized Cost on the Public: N/A.

Dated: May 18, 1998.

J. Edgar Nichols,

Team Leader, Information Services Group.

[FR Doc. 98–13716 Filed 5–21–98; 8:45 am]

BILLING CODE 4820–02–P

DEPARTMENT OF THE TREASURY

Customs Service

Proposed Collection; Comment Request; Importation Bond Structure

ACTION: Notice and request for comments.

SUMMARY: As part of its continuing effort to reduce paperwork and respondent burden, Customs invites the general public and other Federal agencies to comment on an information collection requirement concerning Importation Bond Structure. This request for comment is being made pursuant to the Paperwork Reduction Act of 1995 (Public Law 104–13; 44 U.S.C. 3505(c)(2)).

DATES: Written comments should be received on or before July 21, 1998, to be assured of consideration.

ADDRESSES: Direct all written comments to U.S. Customs Service, Information Services Group, Room 3.2C, Attn.: J. Edgar Nichols, 1300 Pennsylvania Avenue, NW, Washington, D.C. 20229.

FOR FURTHER INFORMATION CONTACT: Requests for additional information should be directed to U.S. Customs Service, Attn.: J. Edgar Nichols, Room 3.2C, 1300 Pennsylvania Avenue NW, Washington, D.C. 20229, Tel. (202) 927–1426.

SUPPLEMENTARY INFORMATION: Customs invites the general public and other Federal agencies to comment on proposed and/or continuing information collections pursuant to the Paperwork Reduction Act of 1995 (Public Law 104–13; 44 U.S.C. 3505(c)(2)). The comments should address: (1) Whether the collection of information is necessary for the proper performance of the functions of the agency, including whether the information shall have practical utility; (b) the accuracy of the agency's estimates of the burden of the collection of information; (c) ways to enhance the quality, utility, and clarity of the information to be collected; (d) ways to minimize the burden including the use of automated collection techniques or the use of other forms of information technology; and (e) estimates of capital or start-up costs and costs of operations, maintenance, and purchase of services to provide information. The comments that are submitted will be summarized and included in the Customs request for Office of Management and Budget (OMB) approval. All comments will become a matter of public record. In this document Customs is soliciting comments concerning the following information collection:

Title: Importation Bond Structure.

OMB Number: 1515–0144.

Form Number: N/A.

Abstract: The bond is used to assure that duties, taxes, charges, penalties, and reimbursable expenses owed to the Government are paid; to facilitate the movement of merchandise through Customs; and to provide legal recourse

for the Government for noncompliance with Customs laws and regulations and the laws and regulations of other agencies which are enforced by Customs.

Current Actions: There are no changes to the information collection. This submission is being submitted to extend the expiration date.

Type of Review: Extension (without change).

Affected Public: Business, Individuals, Institutions.

Estimated Number of Respondents: 590,250.

Estimated Time Per Respondent: 15 minutes.

Estimated Total Annual Burden Hours: 147,563.

Estimated Total Annualized Cost on the Public: N/A.

Dated: May 18, 1998.

J. Edgar Nichols,

Team Leader, Information Services Group.

[FR Doc. 98–13717 Filed 5–21–98; 8:45 am]

BILLING CODE 4820–02–P

DEPARTMENT OF THE TREASURY

Customs Service

Proposed Collection; Comment Request; Declaration by the Person Who Performed the Processing of Goods Abroad

ACTION: Notice and request for comments.

SUMMARY: As part of its continuing effort to reduce paperwork and respondent burden, Customs invites the general public and other Federal agencies to comment on an information collection requirement concerning Declaration by the Person Who Performed the Processing of Goods Abroad. This request for comment is being made pursuant to the Paperwork Reduction Act of 1995 (Public Law 104–13; 44 U.S.C. 3505(c)(2)).

DATES: Written comments should be received on or before July 21, 1998, to be assured of consideration.

ADDRESSES: Direct all written comments to U.S. Customs Service, Information Services Group, Room 3.2C, Attn.: J. Edgar Nichols, 1300 Pennsylvania Avenue, NW, Washington, D.C. 20229.

FOR FURTHER INFORMATION CONTACT: Requests for additional information should be directed to U.S. Customs Service, Attn.: J. Edgar Nichols, Room 3.2C, 1300 Pennsylvania Avenue NW, Washington, D.C. 20229, Tel. (202) 927–1426.

SUPPLEMENTARY INFORMATION: Customs invites the general public and other Federal agencies to comment on proposed and/or continuing information collections pursuant to the Paperwork Reduction Act of 1995 (Public Law 104–13; 44 U.S.C. 3505(c)(2)). The comments should address: (1) whether the collection of information is necessary for the proper performance of the functions of the agency, including whether the information shall have practical utility; (b) the accuracy of the agency's estimates of the burden of the collection of information; (c) ways to enhance the quality, utility, and clarity of the information to be collected; (d) ways to minimize the burden including the use of automated collection techniques or the use of other forms of information technology; and (e) estimates of capital or start-up costs and costs of operations, maintenance, and purchase of services to provide information. The comments that are submitted will be summarized and included in the Customs request for Office of Management and Budget (OMB) approval. All comments will become a matter of public record. In this document Customs is soliciting comments concerning the following information collection:

Title: Declaration by the Person Who Performed the Processing of Goods Abroad.

OMB Number: 1515–0110.

Form Number: N/A.

Abstract: This declaration, prepared by the foreign processor, submitted by the filer with each entry, provides details on the processing performed abroad and is necessary to assist Customs in determining whether the declared value of the processing is accurate.

Current Actions: There are no changes to the information collection. This submission is being submitted to extend the expiration date.

Type of Review: Extension (without change).

Affected Public: Businesses, Individuals, Institutions.

Estimated Number of Respondents: 7,500.

Estimated Time Per Respondent: 15 minutes.

Estimated Total Annual Burden Hours: 1,880.

Estimated Total Annualized Cost on the Public: N/A.

Dated: May 18, 1998.

J. Edgar Nichols,

Team Leader, Information Services Group.

[FR Doc. 98–13718 Filed 5–21–98; 8:45 am]

BILLING CODE 4820–02–P

DEPARTMENT OF THE TREASURY

Customs Service

Proposed Collection; Comment Request; U.S./Israel Free Trade Agreement

ACTION: Notice and request for comments.

SUMMARY: As part of its continuing effort to reduce paperwork and respondent burden, Customs invites the general public and other Federal agencies to comment on an information collection requirement concerning the U.S./Israel Free Trade Agreement Importation Bond Structure. This request for comment is being made pursuant to the Paperwork Reduction Act of 1995 (Public Law 104–13; 44 U.S.C. 3505(c)(2)).

DATES: Written comments should be received on or before July 21, 1998 to be assured of consideration.

ADDRESSES: Direct all written comments to U.S. Customs Service, Information Services Group, Room 3.2C, Attn.: J. Edgar Nichols, 1300 Pennsylvania Avenue, NW, Washington, D.C. 20229.

FOR FURTHER INFORMATION CONTACT: Requests for additional information should be directed to U.S. Customs Service, Attn.: J. Edgar Nichols, Room 3.2C, 1300 Pennsylvania Avenue NW, Washington, D.C. 20229, Tel. (202) 927–1426.

SUPPLEMENTARY INFORMATION: Customs invites the general public and other Federal agencies to comment on proposed and/or continuing information collections pursuant to the Paperwork Reduction Act of 1995 (Public Law 104–13; 44 U.S.C. 3505(c)(2)). The comments should address: (1) whether the collection of information is necessary for the proper performance of the functions of the agency, including whether the information shall have practical utility; (b) the accuracy of the agency's estimates of the burden of the collection of information; (c) ways to enhance the quality, utility, and clarity of the information to be collected; (d) ways to minimize the burden including the use of automated collection techniques or the use of other forms of information technology; and (e) estimates of capital or start-up costs and costs of operations, maintenance, and purchase of services to provide information. The comments that are submitted will be summarized and included in the Customs request for Office of Management and Budget (OMB) approval. All comments will become a matter of public record. In this document Customs is soliciting

comments concerning the following information collection:

Title: U.S./Israel Free Trade Agreement.

OMB Number: 1515–0192.

Form Number: N/A.

Abstract: This collection is used to ensure conformance with the provisions of the U.S./Israel Free Trade Agreement for duty free entry status.

Current Actions: There are no changes to the information collection. This submission is being submitted to extend the expiration date.

Type of Review: Extension (without change).

Affected Public: Businesses, Individuals, Institutions.

Estimated Number of Respondents: 34,500.

Estimated Time Per Respondent: 10 minutes.

Estimated Total Annual Burden Hours: 7,505.

Estimated Total Annualized Cost on the Public: N/A.

Dated: May 18, 1998.

J. Edgar Nichols,

Team Leader, Information Services Group.

[FR Doc. 98–13719 Filed 5–21–98; 8:45 am]

BILLING CODE 4820–02–P

DEPARTMENT OF THE TREASURY

Customs Service

Public Meetings in New Orleans and Houston on Vessel Entrance and Clearance Procedures

AGENCY: U.S. Customs Service, Department of the Treasury.

ACTION: Notice of public meetings.

SUMMARY: The United States Customs Service will be holding two public meetings regarding a recent policy determination regarding the entrance and clearance requirements for vessels and aircraft servicing offshore operations beyond the territorial waters of the United States. One meeting will be held in New Orleans, Louisiana, and the other will be held in Houston, Texas. This document announces the dates, times and other particulars of the meetings. Questions which one wishes to have addressed at the meetings may be communicated in writing to Customs Headquarters prior to the meetings.

DATES: The meetings will be held at the following dates and times: *For the Houston meeting:* June 15, 1998, from 1:00 p.m. until 4:00 p.m. *For New Orleans meeting:* June 17, 1998, from 1:00 p.m. until 4:00 p.m. *For submitted written comments to be addressed at meetings:* Comments must be received no later than the close of business June 1, 1998.

ADDRESSES: The meetings will be held at the following locations: *For the Houston meeting:* Port of Houston Authority Main Office Bldg., 111 East Loop North, First Floor Training Room, Houston, Texas. *For the New Orleans meeting:* New Orleans Customshouse, 423 Canal Street, Room 223, New Orleans, Louisiana. *Written comments should be submitted to:* Office of Field Operations, Trade Compliance, Attn: William Scopa, U.S. Customs Service, 1300 Pennsylvania Avenue, Washington, D.C. 20229, or faxed to the attention of William Scopa at (202) 927–1356.

FOR FURTHER INFORMATION CONTACT: *Regarding questions about attending the Houston meeting:* please call (281) 985–6700. *Regarding questions about attending the New Orleans meeting:* please call (504) 670–2391. *For information regarding the entrance and clearance requirements: for operational or policy concerns:* contact William Scopa at (202) 927–3112; *for regulatory issues:* contact Larry Burton at (202) 927–1287.

SUPPLEMENTARY INFORMATION:

Background

Recently, there has been concern regarding uniform Customs enforcement of the report of arrival requirements set forth in 19 U.S.C. 1433 for any vessel which has received merchandise while outside of the territorial seas; the formal entry requirements set forth in 19 U.S.C. 1434 for any vessel which has delivered or received merchandise while outside the territorial seas; and the corresponding clearance statute, 46 U.S.C. App. 91. The concern is also applicable, through 19 U.S.C. 1644, to enforcement of the report of arrival requirements, formal entry requirements and clearance requirements for aircraft receiving and delivering merchandise while outside the territorial seas. A policy determination by the Customs Service regarding its interpretation of these statutory requirements has had a substantial impact on both Customs and the trade.

Much of the concern resulted from an interpretation by the Customs Service which exempted vessels and aircraft transporting vessel supplies, bunkers, parts, equipment and crew, out beyond the territorial sea from entrance and clearance requirements. This interpretation applied not only to such transactions involving the delivery or receipt of the mentioned items to fixed-site oil rigs, but to non-fixed vessels as well.

Customs reexamined the pertinent statutes and determined that the exemptions for the delivery or receipt of vessel supplies, bunkers, parts, equipment and crew to non-fixed vessels located beyond the territorial sea cannot be sustained. It became necessary to immediately implement the suspension of this exemption. The pertinent statutes are clear and unambiguous and it would not be proper for Customs to delay their uniform enforcement.

Customs still, however, holds that vessels or aircraft delivering or receiving goods or passengers to or from fixed-site rigs are not subject to entrance and clearance requirements unless unentered foreign goods are involved in the transportation. Such an interpretation is consistent with the Outer Continental Shelf Lands Act.

Customs recognizes the fact that there has been an increase in commerce involving vessels and aircraft supplying necessary goods and services to numerous domestic and foreign commercial operations just beyond our territorial waters, especially in the Gulf of Mexico. Customs is contemplating providing for less burdensome entry and clearance procedures for vessels and aircraft engaged in these types of activities within the boundaries of the law.

Before beginning such procedures, Customs believes it would be beneficial both to the government and to private entities to hold public meetings on this issue to allow all interested parties an opportunity to be heard. The public forums will provide Customs with the opportunity to fully explain the extent of the recent policy determination.

Since the impact of the Customs policy is most heavily felt by ports in the Gulf of Mexico, public meetings will be held at the ports of New Orleans, Louisiana, and Houston, Texas.

At the meetings, personnel from Customs Headquarters will be available to answer questions regarding the applicability of the laws and to discuss the possibility of modifying vessel and aircraft entrance and clearance procedures. Questions relating to the entrance and clearance requirements under the new policy may be sent to Customs prior to the meetings. Such questions should be sent to Customs at the address or fax number set forth at the beginning of this document, and must be received no later than the close of business on June 1, 1998, in order to be addressed at the meetings.

Space at the meetings will be limited. Attendance will be accommodated on a first-come basis.

Dated: May 19, 1998.

Robert S. Trotter,

Assistant Commissioner. Office of Field Operations.

[FR Doc. 98–13715 Filed 5–21–98; 8:45 am]

BILLING CODE 4820–02–P

DEPARTMENT OF THE TREASURY

United States Mint

Dollar Coin Design Advisory Committee; Notice of Meeting

May 18, 1998.

SUMMARY: The Dollar Coin Design Advisory Committee (DCDAC) will meet Monday and Tuesday June 8–9, 1998. The Committee will recommend to the Secretary of the Treasury a design concept for the obverse (''heads'') of the new $1 coin. This meeting will be open to the public; however, due to limited space, seating at the meeting will be on a first-come basis.

Purpose

The purpose of this meeting is for the Committee to consider design concepts for the obverse of the new $1 coin and to determine a single such design concept to recommend to the Secretary of the Treasury. As an element of the agenda, the Committee will entertain presentations from the public the afternoon of Monday, June 8. In addition to public presentations, the Committee will receive an orientation briefing, nominate design concepts, and recommend a single design concept to the Secretary.

Dates, Times and Places of the Dollar Coin Design Advisory Committee Meeting

June 8, 1998, 11:00 a.m. to 5:15 p.m.
Federal Reserve Bank of Philadelphia, Auditorium, 10 Independence Mall (entrance on 7th Street), Philadelphia, PA 19106

June 9, 1998, 8 a.m. to 2:00 p.m.
Federal Reserve Bank of Philadelphia, Auditorium, 10 Independence Mall (entrance on 7th Street), Philadelphia, PA 19106

Members of the public wishing to schedule an oral presentation at the meeting must contact Michael White, in writing by mail, email, or fax, by no later than 12:00 noon Eastern Time on June 1, 1998 (see below). All mail submissions must be received by the established deadline in order to be considered timely. The request must identify the name of the individual who will make the presentation and the organization they represent, and include an outline of the merits, background, and historical significance of the concept that will be advocated. Presentations will be limited to five (5) minutes each, and will generally be reviewed on a first-come basis. Presenters will be notified by no later than June 5, 1998, if they have been selected for presentation. An additional thirty (30) minutes will be set aside during the first day of the meeting for unscheduled presentations.

Members of the public who have not been selected in advance for presentation may sign up on the first day of the meeting on June 8, 1998, between the hours of 11:00 a.m. and 12:00 noon, in the back of the meeting room. Requests for an unscheduled presentation will be reviewed on a first-come basis.

Any member of the public wishing to submit a design concept should do so via the Internet by accessing the Mint's web site (*http://www.usmint.gov*) and e-mailing the Mint by June 1, 1998. Alternatively, if no Internet access is available, design concepts may be submitted in writing to Michael White (see below); mail must be received no later than June 1, 1998 A summary of suggested concepts that comply with the parameters listed below will be compiled and presented to Committee members prior to the meeting.

As stated in the Committee Charter, the Committee will recommend to the Secretary an obverse design concept that comports with the following parameters: (a) The design shall maintain a dignity befitting the Nation's coinage, (b) the design shall have broad appeal to the citizenry of the Nation and shall avoid subjects or symbols that are likely to offend, (c) the design should not include any inscriptions beyond those required by statute, and (d) the design concept shall not depict a living person. In addition, the Secretary has determined that the obverse design should be a representation of one or more women.

FOR FURTHER INFORMATION CONTACT: Michael White, United States Mint, Dollar Coin Design Advisory Committee, 633 3rd Street N.W., Room 715, Washington, DC 20220, Voice: (202) 874–7565 (for additional information only; requests to make a presentation or propose a design concept must be in writing), Fax: (202) 874–4083, Web site: http://www.usmint.gov.

Philip Diehl,

Director, The United States Mint.

[FR Doc. 98–13669 Filed 5–21–98; 8:45 am]

BILLING CODE 4810–37–P

DEPARTMENT OF THE TREASURY

Office of Thrift Supervision

[AC–21: OTS No. 15152]

Ben Franklin Bank of Illinois, Arlington Heights, IL; Approval of Conversion Application

Notice is hereby given that on May 14, 1998, the Director, Corporate Activities, Office of Thrift Supervision, or her designee, acting pursuant to delegated authority, approved the application of Ben Franklin Bank of Illinois, Arlington Heights, Illinois, to covert to the stock form of organization. Copies of the application are available for inspection at the Dissemination Branch, Office of Thrift Supervision, 1700 G Street, NW, Washington, DC 20552, and the Central Regional Office, Office of Thrift Supervision, 200 West Madison Street, Suite 1300, Chicago, Illinois 60606.

Dated: May 18, 1998.

By the Office of Thrift Supervision.

Nadine Y. Washington,

Corporate Secretary.

[FR Doc. 98–13697 Filed 5–21–98; 8:45 am]

BILLING CODE 6720–01–M

DEPARTMENT OF THE TREASURY

Office of Thrift Supervision

[AC–20: OTS No. 15189]

Carnegie Savings Bank, Carnegie, PA; Approval of Conversion Application

Notice is hereby given that on May 14, 1998, the Director, Corporate Activities, Office of Thrift Supervision, or her designee, acting pursuant to delegated authority, approved the application of Carnegie Savings Bank, Carnegie, Pennsylvania, to convert to the stock form of organization. Copies of the application are available for inspection at the Dissemination Branch, Office of Thrift Supervision, 1700 G Street, NW, Washington, DC 20552, and the Northeast Regional Office, Office of Thrift Supervision, 10 Exchange Place, 18th Floor, Jersey City, New Jersey 07302.

Dated: May 18, 1998.

By the Office of Thrift Supervision.

Nadine Y. Washington.

Corporate Secretary.

[FR Doc. 98–13696 Filed 5–21–98; 8:45 am]

BILLING CODE 6720–01–M

DEPARTMENT OF THE TREASURY

Office of Thrift Supervision

[AC–19; OTS Nos. H–2311 and 03606]

Homestead Mutual Holding Company, Ponchatoula, LA; Approval of Conversion Application

Notice is hereby given that on May 14, 1998, the Director, Corporate Activities, Office of Thrift Supervision, or her designee, acting pursuant to delegated authority, approved the application of Homestead Mutual Holding Company, Ponchatoula, Louisiana, to convert to the stock form of organization. Copies of the application are available for inspection at the Dissemination Branch, Office of Thrift Supervision, 1700 G Street, NW, Washington, DC 20552, and the Midwest Regional Office, Office of Thrift Supervision, 122 W. John Carpenter Freeway, Suite 600, Irving, Texas 75039–2010.

Dated: May 18, 1998.

By the Office of Thrift Supervision.

Nadine Y. Washington,

Corporate Secretary.

[FR Doc. 98–13695 Filed 5–21–98; 8:45 am]

BILLING CODE 6720–01–M

UNITED STATES INFORMATION AGENCY

Culturally Significant Objects Imported for Exhibition Determinations

Notice is hereby given of the following determinations: Pursuant to the authority vested in me by the Act of October 19, 1965 (79 Stat. 985, 22 U.S.C. 2459), Executive Order 12047 of March 27, 1978 (43 FR 13359, March 29, 1978), and Delegation Order No. 85–5 of June 27, 1985 (50 FR 27393, July 2, 1985), I hereby determine that the objects on the list specified below, to be included in the exhibit, ''Letters in Gold: Ottoman Calligraphy from the Sakip Sabanci Collection, Istanbul (See list [1]), imported from abroad for the temporary exhibition without profit within the United States, are of cultural significance. These objects are imported pursuant to a loan agreement with the foreign lenders. I also determine that the exhibition or display of the listed exhibit objects at the Metropolitan Museum of Art, New York, New York, from on or about September 10, 1998, to on or about December 13, 1998, and at the Los Angeles County Museum of Art, Los Angeles, California, from on or about February 25, 1999, to on or about May 17, 1999, is in the national interest. Public Notice of these determinations is ordered to be published in the **Federal Register.**

Dated: May 13, 1998.

Les Jin,

General Counsel.

[FR Doc. 98–13767 Filed 5–21–98; 8:45 am]

BILLING CODE 8230–01–M

[1] A copy of this list may be obtained by contacting Ms. Jacqueline Caldwell, Assistant General Counsel, at 202/619–6982, and the address is Room 700, U.S. Information Agency, 301 4th Street, SW, Washington, DC 20547–0001.

UNITED STATES INFORMATION AGENCY

Culturally Significant Objects Imported for Exhibition Determinations

Notice is hereby given of the following determinations: Pursuant to the authority vested in me by the Act of October 19, 1965 (79 Stat. 985, 22 U.S.C. 2459), Executive Order 12047 of March 27, 1978 (43 FR 13359, March 29, 1978), and Delegation Order No. 85–5 of June 27, 1985 (50 FR 27393, July 2, 1985), I hereby determine that the objects on the list specified below, to be included in the exhibit, ''Manet, Monet, and the Gare Saint-Lazare'' (See list [1]), imported from abroad for the temporary exhibition without profit within the United States, are of cultural significance. These objects are imported pursuant to a loan agreement with the foreign lenders. I also determine that the exhibition or display of the listed exhibit objects at the National Gallery of Art, Washington, DC, from on or about June 14, 1998, to on or about September 20, 1998, is in the national interest. Public Notice of these determinations is ordered to be published in the **Federal Register**.

Dated: May 18, 1998.

Les Jin,

General Counsel.

[FR Doc. 98–13768 Filed 5–21–98; 8:45 am]

BILLING CODE 8230–01–M

[1] A copy of this list may be obtained by contacting Ms. Jacqueline Caldwell, Assistant General Counsel, at 202/619–6982, and the address is Room 700, U.S. Information Agency, 301 4th Street, SW., Washington, DC 20547–0001.

UNITED STATES INSTITUTES OF PEACE

Sunshine Act Meeting

AGENCY: United States Institute of Peace.

DATE/TIME: Thursday—June 4, 1998 (4:00 p.m.–9:00 p.m.), Friday—June 5, 1998 (9:00 a.m.–6:00 p.m.), Saturday—June 6, 1998 (9:00 a.m.–12:00 noon).

LOCATION: Airlie Conference Center, Airlie, Virginia.

STATUS: Open Session—Portions may be closed pursuant to Subsection (c) of Section 552(b) of Title 5, United States Code, as provided in subsection 1706(h)(3) of the United States Institute of Peace Act, Public Law 98–525.

AGENDA: June 1998 Board Meeting; Approval of Minutes of the Eighty-Fourth Meeting (March 19, 1998) of the Board of Directors; Chairman's Report; President's Report; Review and Discussion of Individual Grants and Fellowships; Review Essay Finalists and Select Winners; Committee Reports; Plans for Rule of Law; Approve Solicited Grant Topics; Review Indemnification and Insurance; Other General Issues.

CONTACT: Dr. Sheryl Brown, Director, Office of Communications, Telephone: (202) 457–1700.

Dated: May 20, 1998.

Charles E. Nelson,

Vice President for Management and Finance, United States Institute of Peace.

[FR Doc. 98–13864 Filed 5–20–98; 12:56 pm]

BILLING CODE 6820–AR–M

Corrections

Federal Register

Vol. 63, No. 99

Friday, May 22, 1998

This section of the FEDERAL REGISTER contains editorial corrections of previously published Presidential, Rule, Proposed Rule, and Notice documents. These corrections are prepared by the Office of the Federal Register. Agency prepared corrections are issued as signed documents and appear in the appropriate document categories elsewhere in the issue.

DEPARTMENT OF THE INTERIOR

Minerals Management Service

30 CFR Parts 202, 216, and 250

RIN 1010–AC23

Royalties on Gas, Gas Analysis Reports, Oil and Gas Production Measurement, Surface Commingling, and Security

Correction

In rule document 98–13275 appearing on page 27677, in the issue of Wednesday, May 20, 1998, make the following correction:

On page 27677, in the second column, in the **EFFECTIVE DATES:** section, in the third line, ''May 12, 1998'' should read ''June 29, 1998''.

BILLING CODE 1505–01–D

NUCLEAR REGULATORY COMMISSION

Advisory Committee on Reactor Safeguards; Meeting Notice

Correction

In notice document 98–12977 beginning on page 27105, in the issue of Friday, May 15, 1998, the subject heading is corrected to read as set forth above.

BILLING CODE 1505–01–D

federal register

Friday
May 22, 1998

Part II

Federal Communications Commission

47 CFR Part 1

Telecommunications Act of 1996, Section 255, Implementation: Access to Telecommunications Services and Equipment, and Customer Premises Equipment by Persons With Disabilities; Proposed Rule

FEDERAL COMMUNICATIONS COMMISSION

47 CFR PART 1

[WT Docket No. 96–198; FCC 98–55]

Implementation of Section 255 of the Telecommunications Act of 1996: Access to Telecommunications Services, Telecommunications Equipment, and Customer Premises Equipment by Persons With Disabilities

AGENCY: Federal Communications Commission.

ACTION: Notice of proposed rulemaking.

SUMMARY: This Notice of Proposed Rulemaking (NPRM) is an important step in the Commission's effort to increase the accessibility of telecommunications services and equipment to Americans with disabilities. The NPRM proposes a framework for implementing section 255 of the Communications Act of 1934 (Act), which requires telecommunications equipment manufacturers and service providers to ensure that their equipment and services are accessible to persons with disabilities, to the extent it is readily achievable to do so. In addition, if accessibility is not readily achievable, section 255 requires manufacturers and service providers to ensure compatibility with existing peripheral devices or specialized customer premises equipment commonly used by individuals with disabilities to achieve access, to the extent it is readily achievable to do so. The NPRM first explores the Commission's legal authority to establish rules implementing section 255. The NPRM then seeks comment on the interpretation of specific statutory terms that are relevant to the proceeding. Finally, the NPRM seeks comment on proposals to implement and enforce the requirement that telecommunications equipment and services be made accessible to the extent readily achievable. The actions proposed in the NPRM are needed to ensure that people with disabilities are not left behind in the telecommunications revolution and consequently isolated from contemporary life.

DATES: Comments are due on or before June 30, 1998, and reply comments are due on or before August 14, 1998. Written comments by the public on the proposed information collections are due on or before June 30, 1998. Written comments must be submitted by OMB on the proposed information collections on or before July 21, 1998.

ADDRESSES: Federal Communications Commission, Office of the Secretary, Room 222, Washington, D.C. 20554. In addition to filing comments with the Secretary, a copy of any comments on the information collections contained in the NPRM should be submitted to Judy Boley, Federal Communications Commission, Room 234, 1919 M Street, N.W., Washington, DC 20554, or via the Internet to jboley@fcc.gov, and to Timothy Fain, OMB Desk Officer, 10236 NEOB, 725–17th Street, N.W., Washington, D.C. 20503, or via the internet to fain__t@a1.eop.gov.

FOR FURTHER INFORMATION CONTACT: John Spencer, Mindy Littell, or Susan Kimmel, 202–418–1310. For additional information concerning the information collections contained in the NPRM, contact Judy Boley at 202–418–0214, or via the Internet at jboley@fcc.gov.

SUPPLEMENTARY INFORMATION: This is a synopsis of the NPRM in WT Docket No. 98–198, FCC 98–55, adopted April 2, 1998, and released April 20, 1998. The complete text of the NPRM is available for inspection and copying during normal business hours in the FCC Reference Center (Room 239), 1919 M Street, N.W., Washington, D.C., and also may be purchased from the Commission's copy contractor, International Transcription Services (ITS, Inc.), (202) 857–3800, 1231 20th Street, N.W., Washington, D.C. 20036. Alternative formats of the full text of the NPRM are available to persons with disabilities in the following forms: computer diskette, large print, audio cassette, and Braille, by contacting Martha Contee at (202) 418–0260, TTY (202) 418–2555, or at mcontee@fcc.gov, or Ruth Dancey at (202) 418–0305, TTY (202) 418–2970, or at rdancey@fcc.gov. The full text of the NPRM can also be downloaded at http://www.fcc.gov/dtf/section255.html.

All relevant and timely comments will be considered by the Commission before final action is taken in this proceeding. To file formally in this proceeding, participants must file an original and five copies of all comments, reply comments, and supporting comments. If participants want each Commissioner to receive a personal copy of their comments, an original and nine copies must be filed. Comments and reply comments will be available for public inspection during regular business hours in the Commission's Reference Center and through ITS, Inc., the Commission's duplicating contractor.

For purposes of this proceeding, the Commission waives those provisions of the rules that require formal comments to be filed on paper, and encourages parties to file comments electronically. Electronically filed comments that conform to the guidelines specified in this summary will be considered part of the record in this proceeding and accorded the same treatment as comments filed on paper pursuant to Commission rules. To file electronic comments in this proceeding, parties may use the electronic filing interface available on the Commission's World Wide Web site at: <http://dettifoss.fcc.gov:8080/cgi-bin/ws.exe/beta/ecfs/upload.hts>. Further information on the process of submitting comments electronically is available at that location and at: <http://www.fcc.gov/e-file/>.

Paperwork Reduction Act

The NPRM contains a proposed information collection. The Commission, as part of its continuing effort to reduce paperwork burdens, invites the general public and OMB to comment on the information collections contained in the NPRM, as required by the Paperwork Reduction Act of 1995, Public Law No. 104–13. Public comments are due on or before June 30, 1998. Written comments must be submitted by OMB on the proposed information collections on or before July 21, 1998. Comments should address: (1) Whether the proposed collection of information is necessary for the proper performance of the functions of the Commission, including whether the information shall have practical utility; (2) the accuracy of the Commission's burden estimates; (3) ways to enhance the quality, utility, and clarity of the information collected; and (4) ways to minimize the burden of the collection of information on the respondents, including the use of automated collection techniques or other forms of information technology.

OMB Approval Number:

Title: Implementation of Section 255 of the Telecommunications Act of 1996: Access to Telecommunications Services, Telecommunications Equipment, and Customer Premises Equipment by Persons with Disabilities, Notice of Proposed Rulemaking, WT Docket No. 96–198.

Form No.:

Type of Review: New Collection.

Respondents: Complainants, Telecommunications Equipment Manufacturers, and Telecommunications Service Providers.

Number of Respondents: 1,000 prospective complainants annually will report accessibility problems or file complaints using the Commission's ''fast-track'' problem resolution method,

and may be asked to provide the Commission with further information later in the process. This should take approximately 2 hours per response, for a total annual burden of about 2,000 hours. There will be no estimated annual cost. Approximately 1,000 equipment manufacturers and service providers annually are expected to be involved in resolving these complaints. It is estimated that these steps will take approximately 6.50 hours per respondent for a total annual burden of 6,500 hours. The estimated annual cost is $720,000. Additionally, 78,830 telecommunications equipment manufacturers and service providers annually are expected to provide a list of contacts for disability access complaints. And it is possible that 78,830 telecommunications equipment manufacturers and service providers will have equipment or services which will receive a seal or other imprimatur from a consumer or industry group that identifies the service or equipment as in compliance with section 255. Satisfying these burdens will likely take slightly more than 1 hour per respondent for a total annual burden of 78,830 hours, and no annual cost.

Total Number of Respondents: 79,830.

Total Annual Burden: 87,330 hours.

Total Annual Cost: $720,000.

Frequency of Response: Occasional.

Needs and Uses: The information filed as part of a complaint, if the proposal made by the Commission in the NPRM is adopted, will be reviewed by the Commission and by the pertinent entity to develop a solution to the problem. The information filed by the consumer after a complaint is resolved, if the proposal made by the Commission in the NPRM is adopted, will be used by the Commission to verify that the complainant is satisfied that either the impediment to accessibility no longer exists or that a practical solution could not be reached. Any demonstrations made by manufacturers and service providers that accessibility was considered in the equipment or service design process will be used by the Commission to evaluate compliance with the intent of section 255. The interim and final reports submitted by these entities will be used by the Commission to track the progress of resolution of complaints. Rebuttals to assertions of resource availability will help determine whether a particular accessibility measure is a readily achievable solution to an accessibility problem. The list of contacts who are responsible for telecommunications access complaints in each company will be used to speed the complaint process and to increase the likelihood of settlement between parties before the complaint reaches the Commission. The seal or imprimatur from a consumer or industry group that identifies a service or equipment as in compliance with section 255 will be used to inform consumers about the accessibility of particular products or services and will serve as an incentive for compliance by manufacturers and service providers.

Synopsis of Notice of Proposed Rulemaking

1. The Commission adopts this NPRM as an important step in opening the telecommunications revolution to the 54 million Americans with disabilities. Section 255 of the of the Communications Act (section 255), as added by the Telecommunications Act of 1996 (1996 Act)[1] mandates that telecommunications equipment manufacturers and service providers must ensure that their equipment and services are accessible to persons with disabilities, to the extent that it is readily achievable to do so.[2] This goal has become increasingly important as the ability to utilize the benefits of telecommunications technology has become more critical to fully participating in American society. Congress gave the Commission two specific responsibilities: (1) to exercise exclusive jurisdiction with respect to any complaint filed under section 255, and (2) to coordinate with the Architectural and Transportation Barriers Compliance Board (Access Board) in developing guidelines for accessibility of telecommunications equipment and customer premises equipment (CPE).

2. This proceeding was initiated by Notice of Inquiry (NOI) adopted on September 16, 1996 (61 FR 50465). Additionally, in February 1998, the Access Board issued accessibility guidelines *(Access Board Order)* with respect to equipment (63 FR 5608, February 3, 1998). The NPRM is the next step in establishing a record on which to base the Commission's final rules implementing section 255.

3. The NPRM first explores the Commission's legal authority under section 255, and tentatively concludes that the Commission has authority to establish rules to implement section 255. The NPRM also considers other issues related to Commission jurisdiction, including the relationship between the Commission's authority under section 255 and the guidelines established by the Access Board.

4. The NPRM then seeks comment on the interpretation of specific statutory terms that are used in section 255. Many of the terms are defined elsewhere in the Act, and the Commission seeks comment on its tentative view that it is bound by these definitions in the context of section 255. Other terms have been incorporated from the Americans with Disabilities Act.[3] The Commission seeks comment on how these terms can be made workable in the context of telecommunications services and equipment. In particular, the NPRM addresses certain aspects of the term ''readily achievable,'' contained in section 255. The Commission proposes to adopt the ADA definition, but also proposes to establish specific factors to define ''readily achievable'' in the telecommunications context.

5. Finally, the NPRM sets forth proposals to implement and enforce the requirement of section 255 that telecommunications offerings must be accessible to the extent readily achievable. The NPRM also contains proposals based on the requirement that, if accessibility is not readily achievable, manufacturers and service providers must ensure compatibility with existing peripheral devices or specialized customer premises equipment commonly used by individuals with disabilities to achieve access, to the extent it is readily achievable to do so. The centerpiece of these proposals is a ''fast-track'' process designed to resolve many accessibility problems informally, providing consumers with quick solutions and freeing manufacturers and service providers from the burden of more structured complaint resolution procedures. In cases where fast-track solutions are not possible, however, or where there appears to be an underlying failure to comply with section 255, the Commission would pursue remedies through more conventional processes. In both cases, in assessing whether service providers and equipment manufacturers have met their accessibility obligations under section 255, the Commission would look favorably upon demonstrations by companies that they considered accessibility throughout their development of telecommunications services and equipment.

I. Statutory Authority

6. The NPRM considers the scope of the Commission's rulemaking authority and finds that, in section 255, Congress enacted broad principles that require

[1] Public Law 104–104, 110 Stat. 56 (1996).

[2] 47 U.S.C. 255.

[3] Public Law 101–336, 104 Stat. 327 (1990) (codified at 42 U.S.C. 12101–12213) (ADA).

interpretation and implementation in order to ensure an efficient, orderly, and uniform regime governing access to telecommunications services and equipment. As a result, the Commission tentatively concludes that this regime can best be implemented if it adopts specific guidance concerning the requirements of section 255, which will enable the Commission to carry out its enforcement obligations under the Act effectively and efficiently.

7. Additionally, the Commission finds that the language of section 255 indicates that Congress intended to confer upon the Commission broad substantive authority to implement the requirement that telecommunications equipment and services be accessible, and gives the Commission exclusive authority to enforce that mandate. The Commission views the Access Board's equipment guidelines as a starting point for the implementation of section 255 and stresses the importance of striving to interpret section 255 in a way that ensures that telecommunications services and equipment will be treated consistently. The Commission seeks comment on its tentative conclusion that, while it has discretion regarding use of the Access Board's guidelines in developing its comprehensive implementation scheme, the Commission proposes to accord the guidelines substantial weight in developing regulations and in developing a broader structure for implementation.

8. The Commission determines that if Congress had intended to permit complaints under section 255 only against common carriers, and not manufacturers, the statute would say so explicitly. The Commission seeks comment on whether there is any basis for concluding that damages, pursuant to sections 207 and 208 of the Act or otherwise, are available with respect to entities other than common carriers. In addition, the Commission affirms that section 255 forecloses civil actions for damages brought under section 207. The exclusive jurisdiction established in the statute for Commission consideration of complaints, in combination with the preclusion of private rights of action, does not allow for private litigation. The Commission seeks comment on this conclusion.

II. Statutory Definitions

A. Scope of Statutory Coverage

(1) ''Telecommunications'' and ''Telecommunications Service''

9. Section 255 applies to ''manufacturer[s] of telecommunications equipment or customer premises equipment'' and ''provider[s] of telecommunications service,'' and section 251(a)(2) applies only to ''telecommunications carrier[s'] * * * network features, functions, or capabilities.''[4] The Commission tentatively concludes that, to the extent these phrases are broadly grounded in the Act, they require no further definition, and the Commission need only elucidate their application in the context of section 255. To the extent specific terms arise solely in connection with section 255, however, the Commission will consider whether further definition or clarification is appropriate. The Commission notes that the use of the term ''telecommunications'' in the statute may have the effect of excluding from the coverage of section 255 a number of services that might be desired by consumers. Only those services which are considered to be ''telecommunications services'' are subject to regulation under Title II of the Act. ''Information services,'' such as voice mail and electronic mail, are excluded from regulation.

10. Many services are considered telecommunications services and, therefore, are clearly subject to the requirements of section 255. The Commission recognizes, however, that there are some important and widely used services which, under the Commission's interpretation, fall outside the scope of section 255 because they are considered information services. Given the broad objectives Congress sought to accomplish by its enactment of section 255, the Commission seeks comment on whether Congress intended section 255 to apply to a broader range of services.

(2) ''Provider of Telecommunications Service''

11. Because the Act does not define ''provider of telecommunications service,'' the NPRM proposes some clarifications regarding aspects of this phrase as used in section 255. With respect to section 255, the Commission believes that Congress intended to use the term ''provider'' broadly, to include entities that supply or furnish telecommunications services, as well as entities that make available such services. The Commission therefore proposes that all entities offering telecommunications services to the public should be separately subject to section 255, without regard to accessibility measures taken by the service provider who originates the offering. For example, the statute does not exclude resellers from the definition of telecommunications service provider. The NPRM seeks comment on this proposal.

12. Additionally, the NPRM proposes to subject a provider of telecommunications service to the requirements established in sections 255(c) and 255(d) only to the extent that it is providing telecommunications services. The Commission seeks comment on whether this proposal is practical if a provider is using the same facilities to offer telecommunications services and services not meeting the statutory definition.

(3) ''Manufacturer of Telecommunications Equipment or Customer Premises Equipment''

13. Section 255(b) of the Act provides that ''[a] manufacturer of telecommunications equipment or customer premises equipment shall ensure that the equipment is designed, developed, and fabricated to be accessible to and usable by persons with disabilities, if readily achievable.''[5]

(a) *Equipment.* 14. The NPRM finds that section 255 does not distinguish between or set out separate accessibility requirements for telecommunications equipment and customer premises equipment (CPE). The Commission tentatively concludes that these terms encompass all equipment used in the provision of telecommunications service, whether collocated with a user or found elsewhere in a telecommunications system. The Commission further tentatively concludes that section 255 applies to all such equipment the same requirement of functional accessibility. In short, to the extent end users must interact with equipment to use telecommunications services, section 255 applies. The NPRM invites comment on this view.

15. The NPRM seeks comment on possible approaches to resolving practical difficulties presented when inaccessibility may be due to multiple elements of a telecommunications system.

16. The Commission next proposes that section 255 apply to multi-use equipment only to the extent the equipment serves a telecommunications function. The NPRM solicits comment on this proposal, and in particular on practical aspects of its application. What, for example, is the obligation of a manufacturer who produces equipment apparently intended for a non-telecommunications application, but that finds use in connection with a

[4] 47 U.S.C. 255, 251(a)(2).

[5] 47 U.S.C. 255(b).

telecommunications service subject to section 255?

17. Regarding software products, the NPRM notes that the definition of telecommunications equipment includes ''software integral to such equipment (including upgrades).'' [6] Given that the focus of section 255 should be on functionality, the Commission tentatively views software as simply one method of controlling telecommunications functions. The NPRM thus proposes to treat software integral to telecommunications equipment the same as equipment or telecommunications services, and seeks comment on this proposal.

18. On the other hand, the Commission notes that the statutory definition of CPE does not include a corresponding explicit reference to software. Where a CPE manufacturer markets products that include software, the Commission sees no reason to treat the bundled software differently from any other component of the equipment. Where software to be used with CPE is marketed separately from the CPE, however, the Commission believes that the software itself would not be subject to section 255, and that it could not even be considered to fall within the statutory definition of CPE. Further, the Commission believes that software manufacturers would not be directly subject to section 255 for software bundled with the CPE of other manufacturers. The NPRM seeks comment on these issues, and in particular on the practical aspects of applying this distinction.

(b) Manufacturer. 19. The NPRM tentatively concludes that section 255 should be construed to apply to all manufacturers offering equipment for use in the United States, regardless of their location or national affiliation. The Commission seeks comment on this proposal.

20. Regarding the question of how section 255 should apply to manufacturers involved in the production of multiple-source equipment, the NPRM proposes to adopt the ''final assembler'' approach taken by the Access Board guidelines. The Commission seeks comment on this proposal.

21. The NPRM also tentatively concludes that the term ''manufacturer'' generally would not include post-manufacturing distribution entities such as wholesalers and retailers. Where the manufacturing and distributing entities are affiliated, however, or where the distributing entities provide customer support services commonly offered by manufacturers of equipment subject to section 255, the Commission tentatively finds that it may be desirable either to treat the distributor as a ''manufacturer'' or to assign to the final assembler responsibility for the distributor's accessibility efforts. The Commission seeks comment on the types of arrangements between manufacturers and distributors that could present these situations, including private brand arrangements, and seeks comment on effective ways of dealing with them.

(4) ''Network Features, Functions, or Capabilities''

22. Section 251(a)(2) of the Act requires that a telecommunications carrier not install network features, functions, or capabilities that do not comply with the guidelines and standards established pursuant to section 255. The Act does not expressly define ''network features, functions, and capabilities,'' but it does provide examples as part of its definition of ''network element.'' [7] The Commission recently explored this area from the standpoint of interconnection in some detail in the *Local Competition Order* (61 FR 45476, August 29, 1996). The NPRM therefore tentatively concludes that the phrase ''network features, functions, or capabilities'' does not require further interpretation in this proceeding.

23. The NOI sought comment on the relationship between the duty of carriers under section 251(a)(2) and the duty of equipment manufacturers and service providers under section 255. Based on the limited comments received on this issue, the NPRM tentatively concludes that section 251(a)(2) governs carriers' configuration of their network capabilities. It does not make them guarantors of the decisions of service providers regarding how to assemble services from network capabilities, and it does not impose requirements regarding accessibility characteristics of the underlying components.

24. The Commission invites further comment on these views, on specific situations that might bring section 251(a)(2) into play, and on recommended approaches to address likely problems. The Commission also seeks comment regarding the relationship between the enforcement procedures established by section 252 for interconnection agreements and the Commission's exclusive enforcement authority under section 255. Additionally, the Commission seeks comment regard how responsibility for any guidelines or standards for accessibility and compatibility of equipment or services to be adopted in this proceeding should be apportioned between (1) the underlying manufacturer or provider of a network element; and (2) the carrier that incorporates that element into its network to provide a feature, function, or capability.

B. Nature of Statutory Requirements

25. Other essential terms used in section 255 are not native to the Act, but have their roots in the ADA and other disability law. For these terms, the Commission takes special note of the expertise and recommendations of the Access Board. However, the Commission tentatively concludes that it is bound to interpret section 255 in light of the broader purposes of the 1996 Act and of the Communications Act itself.

(1) ''Disability''

26. Section 255(a)(1) of the Act provides that ''[t]he term 'disability' has the meaning given to it by section 3(2)(A) of the [ADA].'' The ADA defines ''disability'' as: [8]

- A physical or mental impairment that substantially limits one or more of the major life activities of an individual;
- A record of such an impairment; or
- Being regarded as having such an impairment.

The NPRM proposes to follow what the Commission considers to be the mandate of section 255 by using without modification or enhancement the ADA definition of ''disability.'' In order to provide guidance for equipment manufacturers and service providers seeking to increase accessibility of their offerings, however, the NPRM also proposes to use the Access Board's list of categories of common disabilities that should be considered in analyzing equipment and service offerings under section 255. The Commission notes that it does not view the list as either exhaustive or final. The Commission seeks comment on these proposals, and invites suggestions for additional ways of making the definition of ''disability'' useful to industry and consumers.

(2) ''Accessible to and Usable by''

27. Section 255 requires that equipment and telecommunications services be ''accessible to and usable by individuals with disabilities, if readily achievable.'' The Access Board guidelines define ''usability'' as meaning ''that individuals with disabilities have access to the full functionality and documentation for the

[6] 47 U.S.C. 153(45).

[7] 47 U.S.C. 153(29).

[8] 42 U.S.C. 12102(a)(2).

product, including instructions, product information (including accessible feature information), documentation, and technical support functionally equivalent to that provided to individuals without disabilities,'' and define ''accessibility'' as compliance with sections 1193.31 through 1193.43 of the Access Board's rules. The Commission proposes to adopt the Access Board's definition of ''usability'' as part of the Commission's definition of ''accessible to and usable by.'' The Commission tentatively concludes that there is no reason to distinguish the two terms for purposes of section 255, and will use the term ''accessibility'' in the broad sense to refer to the ability of persons with disabilities to actually use the equipment or service by virtue of its inherent capabilities and functions.

28. The Access Board guidelines define equipment accessibility as including a list of functions. In addition, section 1193.37 of the Access Board's rules calls for a pass-through of ''cross-manufacturer, non-proprietary, industry-standard codes, translation protocols, formats or other information necessary to provide telecommunications in an accessible format.'' The Commission believes the Access Board's definition of accessibility and the related Appendix materials in the Access Board's order provide an appropriate basis for evaluating accessibility obligations under section 255, and proposes to adopt them as part of the definition of ''accessible to and usable by.'' The Commission also proposes that such an evaluation should include not only use of the equipment itself, but also support services akin to what is provided to consumers generally to help them use equipment. The NPRM seeks comment on this proposal and on how the Commission might apply the Access Board's mandate that CPE ''pass through'' accessibility information. Further, the Commission invites comment on criteria that would constitute service accessibility.

29. The NPRM next reiterates the Commission position, as stated in the NOI, that section 255 reaches only those aspects of accessibility to telecommunications over which equipment manufacturers and service providers subject to the Commission's authority have direct control, such as the design of equipment or the manner in which a telecommunications service is delivered to users. The Commission seeks comment on this position. Similarly, if a person with a disability is able to use CPE such as a screen-reading terminal, but finds that a telecommunications service is not usable because the terminal cannot generate a screen display from the data provided through the service, this would also present an issue of inaccessibility, but the cause of the inaccessibility might be the service, or the equipment, or both. The Commission also seeks comment on what accessibility obstacles are encountered by persons with disabilities that are attributable to telecommunications service or equipment characteristics. To the extent that service accessibility is determined by network equipment, including integral software, how should the Commission distinguish between accessibility obstacles attributable to network equipment, and those attributable to service providers?

(3) ''Compatible With''

(a) ''Peripheral devices or specialized CPE''. 30. Where accessibility is not readily achievable, section 255(d) requires that telecommunications offerings be compatible with ''existing peripheral devices or specialized [CPE] commonly used by individuals with disabilities to achieve access, if readily achievable.''[9] The Access Board defines ''peripheral devices'' as ''[d]evices employed in connection with telecommunications equipment or customer premises equipment to translate, enhance, or otherwise transform telecommunications into a form accessible to individuals with disabilities.'' It defines specialized CPE as ''[e]quipment, employed on the premises of a person (other than a carrier) to originate, route, or terminate telecommunications, which is commonly used by individuals with disabilities to achieve access.'' The Board further explains its definitions as follows:

> [T]he term peripheral devices commonly refers to audio amplifiers, ring signal lights, some TTY's, refreshable Braille translators, text-to-speech synthesizers and similar devices. These devices must be connected to a telephone or other customer premises equipment to enable an individual with a disability to originate, route, or terminate telecommunications. Peripheral devices cannot perform these functions on their own. Specialized [CPE] should be considered a subset of [CPE], and . . . manufacturers of specialized [CPE] should make their products accessible to all individuals with disabilities, including the disability represented by their target market, where readily achievable.

31. The NPRM seeks comment on these definitions, but tentatively concludes that it is not necessary to distinguish between peripheral devices and specialized CPE. The NPRM further tentatively concludes that the reference in section 255(d) to equipment and devices ''commonly used * * * to achieve access'' identifies products with a specific telecommunications functionality. In contrast, devices such as hearing aids, which have a broad application outside the telecommunications context, may be used in conjunction with peripheral equipment or specialized CPE, but are not themselves considered specialized CPE or peripheral devices under the Act. The NPRM seeks comment on this issue.

(b) ''Commonly used''. 32. The NPRM next considers criteria for determining when equipment subject to section 255 is ''commonly used.'' In light of the specific definitions set out in the Access Board guidelines, the NPRM seeks further comment with regard to when devices and CPE should be considered ''commonly used,'' as described in the statute. The NPRM also seeks comment regarding whether and to what extent the cost of CPE or peripheral devices should be considered in determining whether the CPE or peripheral device may be deemed to be commonly used by persons with disabilities. The Commission's tentative view is that the CPE or peripheral device must be affordable and widely available in order to be considered ''commonly used'' by persons with disabilities. The Commission also notes that a listing of such ''commonly used'' components could be a valuable source of information to apprise persons with disabilities of the available technologies, and the Commission seeks comment regarding whether and how a listing could be maintained.

(c) Compatibility. 33. Several commenters note that ensuring compatibility requires coordination among, *e.g.*, manufacturers of specialized customer premises equipment, network equipment and CPE manufacturers, and service providers. The Access Board lists five criteria for determining compatibility, subject to applicability: (1) External access to all information and control mechanisms; (2) connection point for external audio processing devices; (3) compatibility of controls with prosthetics; (4) TTY connectability; and (5) TTY signal compatibility. The NPRM proposes to adopt these five criteria. The Commission recognizes, however, that these criteria might need to be broadened to account for likely technological advances in both telecommunications and accessibility products, either now or in the future, as developments warrant. The NPRM seeks

[9] 47 U.S.C. 255(d).

comment on this proposal, and on these views.

(d) Other matters. 34. Finally, the NPRM requests commenters to address how the definition of ''readily achievable'' should apply to the obligations of manufacturers and service providers to provide compatibility pursuant to section 255(d). Specifically, the NPRM seeks comment regarding the extent to which the same factors that are used to determine whether accessibility is readily achievable can or should also be used to determine whether compatibility is readily achievable. Commenters are also asked to address how the goal of compatibility can be met without hampering competition or the development of new technologies.

(4) ''Readily Achievable''

(a) General. 35. Section 255 requires accessibility to the extent it is 'readily achievable.' Section 255(a)(2) provides that ''[t]he term ''readily achievable'' has the meaning given to it by section 301(9) of [the ADA],'' which states: [10]

The term ''readily achievable'' means easily accomplishable and able to be carried out without much difficulty or expense. In determining whether an action is readily achievable, factors to be considered include—

(A) the nature and cost of the action needed under [the ADA];

(B) the overall financial resources of the facility or facilities involved in the action; the number of persons employed at such facility; the effect on expenses and resources, or the impact otherwise of such action upon the operation of the facility;

(C) the overall financial resources of the covered entity; the overall size of the business of a covered entity with respect to the number of its employees; the number, type, and location of its facilities; and

(D) the type of operation or operations of the covered entity, including the composition, structure, and functions of the workforce of such entity; the geographic separateness, administrative or fiscal relationship of the facility or facilities in question to the covered entity.

The NPRM tentatively concludes that ''readily achievable,'' as defined by the ADA and incorporated by section 255, simply means ''easily accomplishable and able to be carried out without much difficulty or expense.'' The Commission believes that this broad definition is applicable to telecommunications equipment and services.

36. It is also the Commission's tentative view that the four factors set out with the ADA definition of ''readily achievable'' should be construed as the ADA describes them: factors to be considered in applying the definition in the ADA setting. Given the differences between architectural barriers and telecommunications barriers, it is the Commission's tentative view that the ADA factors should guide, though not constrain, the development of factors that more meaningfully reflect pertinent issues and considerations relevant to telecommunications equipment and services. The Commission intends that any factors developed in this rulemaking will be applied appropriately to the facts of particular cases, and will not operate so as to inadvertently impede efforts to arrive at reasonable judgments in each case. The Commission seeks comment on these tentative conclusions.

(b) Telecommunications factors. 37. The Commission believes a useful framework for analyzing whether a particular telecommunications accessibility feature is ''readily achievable'' involves looking at three areas: (1) Is the feature feasible? (2) What would be the expense of providing the feature? (3) Given its expense, is the feature practical? The Commission seeks comment on these proposed factors. The Commission especially seeks comment on the practical implications of various options: their effect on the development and marketing of accessibility features, on the pace of innovation, and on the administrative costs associated with implementation and enforcement measures.

38. A difficult aspect of determining whether a particular accessibility feature is readily achievable involves determining whether it is practical, given the expenses involved. In determining the practicality of providing a particular accessibility feature, the Commission believes it is appropriate to consider the resources available to the provider to meet the expenses associated with accessibility, the potential market for the product or service, the degree to which the provider would recover the incremental cost of the accessibility feature, as well as issues regarding product life cycles. Because the ultimate determination of whether it is readily achievable to make a particular product offering accessible to users with a particular disability may be complex and will depend on the particular circumstances of the case, the nature and extent of section 255 obligations will generally have to be evaluated and refined on a case-by-case basis, as the Commission resolves complaints of non-compliance. The Commission seeks comment on this general approach, as well as on the following specific elements of practicality.

(i) Resources

39. The NPRM examines various ways to consider the resources of firms of varying characteristics, in a manner which would not distort competitive incentives, including the relationship between parent and subsidiary corporations, and tentatively finds most compelling the view that the financial resources of the organization that has legal responsibility for, and control over, a telecommunications product (service or equipment) should be presumed to be available to make that product accessible in compliance with section 255. The NPRM therefore proposes to establish a presumption that the resources reasonably available to achieve accessibility are those of the entity legally responsible for the equipment or service that is subject to the requirements of section 255. The NPRM also proposes, however, that this presumption may be rebutted in a complaint proceeding or other enforcement proceeding in two different respects:

- On the one hand, the assets and revenues of another entity (*e.g.*, parent or affiliate) that is not legally responsible for the equipment or service involved may still be treated as available for purposes of achieving accessibility under section 255, if it is demonstrated that those assets and revenues are generally available to the entity that does have legal responsibility for the equipment or service.
- On the other hand, the general presumption can also be rebutted by a respondent showing that the sub-unit (*e.g.*, corporate division or department) actually responsible for the product or service in question does not have access to the full resources of the corporation or equivalent organization of which it is a part.

40. The Commission tentatively concludes that this presumption may potentially serve as an effective guard against evasive practices. In any event, the NPRM proposes that the Commission will determine what resources are reasonably available on a case-by-case basis in the context of complaint proceedings or other enforcement proceedings, because the variety of organizational forms and other circumstances make development of quantitative standards by the Commission impracticable. The NPRM seeks comment on these proposals.

(ii) Market Considerations

41. The NPRM discusses the scope of the accessibility requirement in terms of how the provision of either conflicting accommodations for different

[10] 42 U.S.C. 12181(9).

disabilities, or accommodations that would address multiple disabilities but would make the offering technically or economically impracticable, should be viewed under the ''readily achievable'' standard. The NPRM also seeks comment on how to incorporate market considerations into an evaluation of whether particular accessibility features are practicable. Additionally, the NPRM invites comment on how accessibility reductions should be treated.

(iii) Cost Recovery

42. The Commission also believes it is appropriate to consider the extent to which an equipment manufacturer or service provider is likely to recover the costs of increased accessibility. The Commission explains that this is not to say that the equipment manufacturer or service provider must be able to fully recover the incremental cost of the accessibility feature in order for accessibility to be readily achievable. Rather, the Commission merely finds that cost recovery is a factor that a company should weigh in making its determination of what is readily achievable. The NPRM further seeks comment on the extent that service providers and manufacturers should consider affordability of accessible products when making cost recovery assessments.

(iv) Timing

43. Several comments address accessibility obligations over the course of a product life cycle, especially as it relates to improved accessibility technology. The Commission phrases the timing question broadly, by asking how product life cycles should be taken into account in making ''readily achievable'' determinations. Given that section 255 has been in effect since February 1996, and in light of the Commission's tentative conclusion that timing issues should be considered as an element of ''readily achievable,'' the Commission believes that a general ''grace period'' for compliance is not warranted. The NPRM, however, seeks comment on this view.

III. Implementation Processes

44. The NPRM next proposes measures that will put section 255 into action, ensuring manufacturers and service providers are in compliance with the requirement that their products must be accessible, to the extent readily achievable, and providing relief for consumers when there are compliance problems. The Commission's proposals rest on two principles: (1) Responsiveness to consumers; and (2) efficient allocation of resources. The NPRM therefore proposes to streamline the process for addressing accessibility issues as much as possible, freeing consumers and industry alike to apply their resources to solving access problems, rather than subjecting them to burdensome procedural requirements. The Commission has made every effort to fashion proposals that will reduce administrative burdens for all who might be involved in the complaint process, and invites suggestions for still further improvements.

45. Thus, the NPRM proposes a two-phase program for dealing with consumer issues arising under section 255. In the first phase, consumer inquiries and complaints will be referred to the manufacturer or service provider concerned, who will have a short period of time to solve the complainant's access problem and informally report to the Commission the results of its efforts. Matters or disputes that remain unresolved may proceed to a second-phase dispute resolution process.

A. Fast-Track Problem-Solving Phase

46. An important part of the Commission's proposal is an informal, ''fast-track'' process designed to solve access problems quickly and efficiently. If the proposed framework is adopted, this process would function as follows:

- The process would be initiated by the submission of a complaint.
- Upon receipt of a complaint, the Commission would promptly forward the complaint to the manufacturer or service provider (or both) whose offerings are the subject of the complaint, and set a deadline for a report of action taken to resolve the complaint.
- During the period prescribed, or during an extension period granted for good cause, the manufacturer or provider would attempt to solve the complainant's problem regarding the accessibility or compatibility of the provider's service or equipment. During this time, the Commission staff would be available to both the complainant and the respondent to provide information and informal assistance upon request.
- By the end of the fast-track phase, the respondent would be expected to informally report to the Commission the results of its efforts to solve the problem that is the subject of the complaint.
- The Commission would evaluate the respondent's report. The matter would be closed if it appeared that the complainant's access problem had been solved and there was no underlying compliance problem, or if the matter was outside the scope of section 255.
- On the other hand, the matter would proceed to a second phase of dispute resolution processes if the problem remained unsolved and there was a question of whether an accessibility solution was readily achievable, or if it appeared there was an underlying problem regarding the respondent's compliance with its section 255 accessibility obligations.

47. The Commission believes that the proposed fast-track process will frequently permit complainants and respondents to resolve disputes before requiring any use of additional Commission processes. In addition, the burden on all parties is intended to be minimal under the Commission's proposal, and the process encourages the rapid, informal solution of access problems. The Commission seeks comment on the general outline and on the more specific aspects of this fast-track process.

(1) Initial Contact With Commission

48. The NPRM first proposes to encourage any consumer who has not directly contacted the manufacturer or service provider before contacting the Commission to do so, and the Commission will provide contact information for that purpose. Consumers would also be invited to contact the Commission again if the problem is not resolved satisfactorily. The Commission seeks comment on this proposal.

49. Further, because section 255 complaints will involve offerings overseen by various Commission bureaus and offices, and because consumers may be unfamiliar with these organizational differences, the Commission anticipates establishing a central Commission contact point for all section 255 inquiries and complaints. The NPRM seeks comment on measures the Commission should take to ensure that persons with disabilities are made aware of their opportunity to address inquiries and complaints to a central contact point at the Commission.

50. The NPRM proposes that persons with disabilities may submit their complaints by any accessible means, including, for example, letter, Braille, facsimile, electronic mail, internet, TTY, audio cassette, or telephone call. The NPRM also proposes, however, to make available a complaint form, but not to require its use for the initiation of a section 255 complaint. In whatever form a complaint is received, however, the Commission will need to ascertain at least the following information before it can proceed:

- Complainant contact information: Name, mailing address, and preferred

contact method (letter, telephone number, TTY number, facsimile number, or electronic mail address).

- Identification of the equipment or service complained of, and the name (and, if known, the address) of its manufacturer or provider.
- A description of how the equipment or service is inaccessible to persons with a particular disability or combination of disabilities.

The Commission seeks comment on what additional information, if any, would tend to provide a clearer description of the difficulty complained of, without requiring excessive or irrelevant information. In any event, the Commission would retain discretion to request from complainants additional information that would help it to rapidly address the request.

(2) Provider Contact

51. The Commission's fast-track proposal envisions initially referring complaints to the manufacturer or service provider (or both, as appropriate). This will necessitate obtaining a list of contact points for each manufacturer and service provider subject to section 255. The NPRM solicits comment on a range of questions pertinent to the establishment and maintenance of such a list of contacts and on whether to require firms to provide accessibility contact information directly to consumers and, if so, how. The Commission seeks comment on these matters and also on whether the process should include a notification to the complainant that the complaint has been referred and, if so, what information the notification should include.

(3) Solution Period; Report

52. Upon receipt of a complaint, the Commission would promptly forward it to the manufacturer or service provider (or both) whose offerings are the subject of the complaint, and set a deadline for a report of action taken to resolve the complaint. The NPRM seeks comment on appropriate customer service standards for complaint forwarding. The NPRM also seeks comment on whether the Commission should forward complaints as submitted, regardless of format, or whether it should forward ''translations'' or transcripts of complaints submitted in formats such as Braille.

53. The NPRM next proposes an action report deadline of five business days from the date the complaint is forwarded, as a reasonable balance between providing sufficient time for respondents to study the complaint, gather relevant information, identify possible accessibility solutions, and, most importantly, work with the complainant to solve the access problem if possible, and providing accessibility as soon as practicably possible. The NPRM invites comment on this proposal.

54. The NPRM also proposes that a provider may file an interim report and a request for additional time in situations where a period of five business days (for example) may be enough time for a provider to assess a problem and begin to resolve it, but may not be long enough to complete the resolution. The Commission seeks comment on this proposal and also on how to provide a mechanism for either party (or the Commission) to terminate the fast-track phase and proceed to traditional dispute resolution processes, where it appears the fast-track process is not leading to a mutually satisfactory resolution.

55. By the end of the fast-track process, the manufacturer or service provider is expected to report informally to the Commission regarding whether the complainant has been provided the access sought, and if not, why it has not. To put the circumstances of the particular accessibility complaint in context, it might also be appropriate for the respondent to report generally its procedures for ensuring product accessibility. In order to provide flexibility in this process, the Commission proposes that such reports may be submitted by telephone call, electronic mail, facsimile or hard-copy letter. The Commission seeks comment on this proposal.

56. Finally, to ensure the integrity of the fast-track process by encouraging a sharing of information between complainant and respondent, the NPRM proposes to require that respondents provide copies of their reports to complainants. To avoid formalizing and stifling the process, however, the NPRM also seeks comment not only on this proposal, but on how to satisfy this requirement in the case of telephonic or other oral reports.

(4) Commission Evaluation

57. At the end of the fast-track process, the NPRM proposes that the Commission would consider both (1) the success of the respondent in providing an appropriate access solution, if possible; and (2) whether there appeared to be an underlying compliance problem, regardless of whether the particular complainant had been satisfied. That review would determine whether further action was required, as follows:

- If it appeared that the complainant's access problem had been satisfactorily solved (or that accessibility was not readily achievable) and there was no indication of an underlying problem of compliance with section 255, the matter would be closed by the Commission.
- If it appeared that the complaint did not involve matters subject to section 255, the matter would be closed.
- If it appeared that the complainant's access problem had been satisfactorily resolved but there was an indication of an underlying compliance problem, the Commission would undertake further dispute resolution efforts to determine the nature and magnitude of the problem, and take appropriate action.
- If it appeared that the access problem had otherwise not been satisfactorily resolved, or if the respondent failed to submit a timely resolution report, the Commission would initiate further resolution processes.

58. The NPRM also proposes that the Commission's evaluation of a resolution report not necessarily be limited to the respondent's initial report, but might also include additional information requested from the respondent or the complainant, discussions with accessibility experts from industry, disability groups, or the Access Board, or review of prior or other pending complaints involving the respondent. Further, to the extent a respondent's report asserted that accessibility was not readily achievable, the claim would be evaluated using the same factors that would be used during a phase-two dispute resolution proceeding. The Commission seeks comment on these proposals.

59. The NPRM proposes that the Commission would communicate its determination to both the complainant and the respondent in writing. If the Commission concluded that no further action was warranted because the matter lies outside the scope of section 255, further information may be supplied that would assist the consumer in seeking relief through other possible avenues. If the determination was to proceed to dispute resolution proceedings, pertinent information relating to initiating those processes would be noted. The Commission seeks comment on this aspect of the fast-track proposal.

60. Finally, the NPRM notes that if the Commission's fast-track determination was that the matter should be closed, information would be provided to assist a complainant who disagreed with that determination and wished to pursue the complaint to phase-two dispute resolution. The Commission proposes

not to require any particular method for complainants to communicate their desire to continue to further stages of dispute resolution, but to leave the method to the complainant's discretion, in the same manner as the complaint filing above. The NPRM seeks comment on these proposals.

B. Use of Traditional Dispute Resolution Processes

(1) Informal Dispute Resolution Process

61. For those section 255 complaints that are not resolved under fast-track procedures, the NPRM proposes to resolve most of these complaints pursuant to informal, investigative procedures, which the Commission considers to be more efficient and flexible than formal procedures. To accommodate special circumstances, however, the NPRM also proposes to establish formal adjudicatory procedures, to be employed only where the complainant requests such resolution and the Commission consents. Finally, the Commission also proposes to allow use of alternative dispute resolution procedures in cases in which the Commission and all parties agree that such procedures are appropriate. The NPRM seeks comment on this general procedural framework, and on other specific issues discussed in the full text of the NPRM.

62. The NPRM seeks comment on the Commission's proposal not to impose a standing requirement for complaints under section 255, whether by virtue of being a person with a disability, being a customer of the entity that is the subject of the complaint, or otherwise. The NPRM also proposes not to establish any time limit for the filing of a complaint under section 255. The Commission seeks comment on these proposals, on the relationship of section 415 of the Act to the Commission's complaint authority in section 255, and on the need for regulatory parity between equipment manufacturers and service providers.

63. In order to avoid confusion regarding when a respondent must answer a complaint in the dispute resolution phase, and to provide an efficient transition from the phase-one fast-track process to the phase-two dispute resolution process, the NPRM proposes to specify the due date in the Commission's written notice initiating the dispute resolution phase. Given the likely complexity of many section 255 complaints, the Commission proposes generally to allow 30 days for a respondent to answer a complaint, computed from the date of the written notice. The Commission would, however, retain the discretion to specify a shorter or longer response date based upon the nature of the complaint and the totality of the circumstances. The NPRM also proposes to require that a respondent must serve a copy of the answer on the complainant and on any other entity it implicates in its answer. The NPRM additionally proposes a reply period of 15 calendar days for the person who filed the original pleading to respond to answers, subject to Commission adjustment in specific cases. The NPRM seeks comment on these proposals.

64. In the interest of ensuring that the dispute resolution processes for section 255 are as accessible as possible, the NPRM proposes not to require any particular format for submissions from complainants or respondents. Because telephonic and other non-permanent oral presentations would not provide an appropriate record for decision making, however, the Commission proposes to require that submissions be in a permanent format. The Commission seeks comment on these proposals, and on any other related issues.

65. Commission consideration of section 255 complaints may often involve evaluation of information which may be considered proprietary business data, including a company's resources available to achieve accessibility. The Commission is sensitive to the need to protect the confidentiality of such information, and does not want to discourage its submission where relevant to the decision-making process. The Commission's rules already provide confidentiality for proprietary information in certain cases. (See, e.g., 47 CFR 0.457(d), 0.457(g), 0.459, and 1.731.) The Commission seeks comment on whether, in the particular context of section 255, existing rules and procedures for review of confidentiality requests strike the best balance between reasonable expectations of confidentiality and open decision-making.

(2) Formal Dispute Resolution Process

66. While the Commission anticipates that most complaints not resolved under fast-track procedures will be adjudicated pursuant to the informal procedures previously discussed, the NPRM proposes to reserve the right to apply a more formal, adjudicatory mechanism in which complainants accept the primary burden of pursuing relevant facts, with attendant rights (such as the right of discovery) and obligations. The NPRM is not proposing specific language for section 255 adjudicatory process rules, but proposes to model them on the common carrier formal complaint procedures set out in §§ 1.720 through 1.736 of the Commission's Rules, modified somewhat to take into account the inherent differences between traditional common carrier complaint issues and accessibility issues under section 255, as specified in the full text of the NPRM. The Commission seeks comment on these variations.

67. The NPRM also does not propose to require a filing fee for informal resolution of complaints, or for formal resolution of complaints directed at equipment manufacturers and service providers that are not common carriers. Under the Act, however, the Commission is required to impose a filing fee for formal complaints directed against common carriers, unless it can be demonstrated that waiving the fee would be in the public interest. The NPRM seeks comment on the circumstances under which the Commission should waive or lower this fee, and on other fee-related questions as indicated in the full text of the NPRM.

68. The NPRM finds that section 255 complaints need not be resolved within the five-month deadline established in section 208(b) of the Act. The NPRM finds that, because section 255 establishes Commission authority to prescribe complaint procedures, separate from authority conferred under section 208, any time limits for resolving complaints under section 208 do not apply.

(3) Alternative Dispute Resolution Process

69. The NPRM proposes to make available alternative dispute resolution (ADR) procedures such as arbitration, conciliation, facilitation, mediation, settlement negotiation, and other consensual methods of dispute resolution for resolving section 255 complaints not resolved under the fast-track process. The Commission tentatively concludes that ADR could be an effective tool for dealing with conflicts arising under section 255, while avoiding the expense and the delay of adversarial proceedings. The Commission seeks comment on these views generally, and on related questions as detailed in the full text of the NPRM.

70. Apart from their role in an ADR process, there may be other ways in which neutral parties with special expertise in accessibility matters could help the Commission resolve complaints. Outside experts and committees can perform a valuable consultative function, helping businesses and consumers to develop

accessibility solutions as telecommunications products and services are being developed. The NPRM invites comment on the role that such parties could serve to help speed resolution of complaints.

71. Other groups with accessibility expertise may well develop out of the process by which section 255 is being implemented and as accessibility efforts become more widespread. The Commission might rely on outside experts to gather and evaluate data needed to resolve accessibility questions. The Commission seeks comment on the utility of relying on such experts and on what provisions might be made to accomplish this objective.

(4) Defenses to Complaints

72. In response to an accessibility complaint or an investigation conducted on the Commission's initiative without a prior complaint, the Commission tentatively finds that it seems likely that the most common defenses mounted by a manufacturer or service provider would involve a claim that: (1) The product in question lies beyond the scope of section 255; (2) the product in question is in fact accessible; or (3) accessibility is not readily achievable. The first two defenses are relatively straightforward, but claims of the third kind are likely to present formidable difficulties. The Commission believes it would be useful to set out for comment some tentative views on use of a ''readily achievable'' defense.

73. To the extent an offering subject to section 255 is not accessible, it is incumbent upon an offeror making a ''readily achievable'' defense to establish facts to support the claim. In addition to the factors used to determine whether an accessibility action is readily achievable, it is also appropriate to give some weight to evidence that a respondent made good faith efforts to comply with section 255 by taking actions that would tend to increase the accessibility of its product offerings, both generally and with respect to the particular product that is the subject of the complaint. Examples of the sorts of measures that would be credited by the Commission are set out in the Access Board guidelines and in the Appendix to the Access Board Order. The NPRM notes, however, that the Board's guidelines should not be viewed as a ''laundry list'' of requirements all firms subject to section 255 must adopt. Rather, each firm should consider the guidelines in light of its situation and the degree to which its products have or lack accessibility features, and then adopt those features that will help it provide the accessibility section 255 requires.

74. The Commission seeks comment on these and other accessibility measures that might be suitable for equipment manufacturers. Further, while the Access Board's focus was limited to equipment manufacturers, the measures it describes generally have analogs applicable to service providers. The Commission therefore specifically seeks comment on measures suitable for service providers. In addition, the Commission seeks comment on whether firms subject to section 255 should be required to provide information regarding how consumers can contact them with respect to accessibility issues, and whether such notice should also include information involving how to contact the Commission in case of accessibility problems, and if so, what information should be required and how it should be provided.

C. Penalties for Non-Compliance

75. Section 255, on its face, makes no special provision for penalties for manufacturers or service providers found to violate its requirements. Given the importance of the accessibility mandate, the Commission believes that it should employ the full range of penalties available under the Act in enforcing section 255. The Commission believes that the Act provides for the following sanctions, which the Commission proposes to apply, as appropriate, given the nature and circumstances of a violation:

- Section 503(b) of the Act provides a system of forfeitures for willful or repeated ''failure to comply with any of the provisions of [the] Act or of any rule, regulation, or order issued by the Commission under [the] Act * * *.''
- At the end of an adjudication, the Commission would usually issue an order setting out its findings and directing prospective corrective measures. It is conceivable these orders might be the result of settlements with respondents, in the nature of consent decrees, if circumstances warrant. In any event, violation of a section 255 order could result in the imposition of a section 503(b) forfeiture.
- Section 312 of the Act provides for the revocation of a station license or construction permit, for the willful or repeated violation of or failure to observe any provision of the Act.
- Section 312 of the Act also provides for the issuance of a cease and desist order directed to a station licensee or construction permit holder, for the willful or repeated violation of or failure to observe any provision of the Act. The Commission believes Sections 4(i) and 208 of the Act provide a basis for such an order with respect to non-licensees.
- Sections 207 and 208 of the Act provide for the award of damages for violations by common carriers and, arguably, others.
- The Commission seeks comment on whether there is a basis for ordering the retrofit of accessibility features into products that were developed without such features, when including them was readily achievable.

The Commission invites comment about these and other possible remedies to enforce section 255 of the Act.

D. Additional Implementation Measures

76. The NPRM notes that other existing Commission processes (and associated forms) may provide efficient vehicles for requirements that may be developed in this proceeding, such as information collection, or for providing notice to firms dealing with the Commission that they may be subject to section 255. The NPRM seeks comment on whether such existing processes might provide additional options for fostering product accessibility. Further, given that sections 207 and 208 of the Act provide an alternate vehicle for submitting complaints that section 255 has been violated, in the case of common carriers, the NPRM seeks comment on whether to modify the existing common carrier complaint rules with respect to section 255 complaints so as to incorporate the kinds of processes the NPRM has proposed for complaints filed under section 255.

77. Finally, the Commission believes there are other measures the Commission itself might take, or might encourage others to take, to foster increased accessibility of telecommunications products. These include:

- Establishment of a clearinghouse for current information regarding telecommunications disabilities issues.
- Publication of information regarding the performance of manufacturers and service providers in providing accessible products, perhaps based on statistics generated through the fast-track and dispute resolution processes.
- Expansion of the information provided on the Internet at the Commission's Disabilities Issues Task Force Web site (http://www.fcc.gov/dtf).
- Efforts by consumer and industry groups to establish ongoing informational and educational programs, product and service certification, standards-setting, and other measures aimed at bridging the gap between disabilities needs and telecommunications solutions.

• Development of peer review processes to complement the proposed implementation measures.

The Commission particularly invites comment regarding the practical aspects of implementing these or other similar implementation measures.

IV. Interim Treatment of Complaints

78. As noted earlier, section 255 became effective upon enactment on February 8, 1996. Until the Commission adopts procedural rules in this proceeding, complaints alleging violations of section 255 may be filed pursuant to Section 1.41 of the Commission's Rules (47 CFR 141) and other general procedural rules (47 CFR 1.45–1.52). Complaints against common carriers may also be filed pursuant to the common carrier complaint rules set out in Part 1, Subpart E of the Commission's Rules (See 47 CFR 1.711, 1.716–1.718, 1.720–1.736).

79. Because the Commission has existing complaint processes in place which enable it to address complaints on a case-by-case basis, the NPRM declines to establish interim rules. Furthermore, the NPRM does not find it necessary to establish specific interim procedures.

80. Although the Commission recognizes that the proposals set forth in the NPRM have no binding effect until formally adopted, they may serve as guidance to parties concerning factors the Commission would likely consider in a complaint proceeding. The Commission urges potential complainants and defendants to take particular note of interpretations of key terminology and the emphasis on accessibility analysis throughout the design process. In addition, the Access Board guidelines and the related Appendix materials may be instructive to affected entities in determining their obligations under section 255 during this interim period.

V. Administrative Matters

A. Ex Parte Presentations

81. The NPRM is a ''permit-but-disclose'' notice and comment rulemaking proceeding. *Ex parte* presentations are permitted, provided they are disclosed as provided in Commission rules. See generally 47 CFR 1.1202 , 1.1203, 1.1206(a).

B. Initial Regulatory Flexibility Analysis

82. As required by section 603 of the Regulatory Flexibility Act, the Commission has prepared the following Initial Regulatory Flexibility Analysis (IRFA) of the expected impact on small entities of the proposals suggested in this document. Written public comments are requested on the IRFA. These comments must be filed in accordance with the same filing deadlines as comments on the rest of the NPRM but they must have a separate and distinct heading designating them as responses to the IRFA. The Commission's Office of Public Affairs, Reference Operations Division, shall send a copy of the NPRM, including the IRFA, to the Chief Counsel for Advocacy of the Small Business Administration in accordance with paragraph 603(a) of the Regulatory Flexibility Act. Public Law 96–354, 94 Stat. 1164, 5 U.S.C. 601 *et seq.* (1981).

(1) Need for, and Objectives of, Proposed Action

83. This rulemaking proceeding was initiated to propose means of implementing and enforcing section 255 of the Act, as added by the Telecommunications Act of 1996. This section is intended to ensure that telecommunications equipment and services will be accessible to persons with disabilities, if such accessibility is readily achievable. If accessibility is not readily achievable, then the telecommunications equipment and services are to be made compatible with specialized customer premises equipment or peripheral devices to the extent that so doing is readily achievable.

84. Given the fundamental role that telecommunications has come to play in today's world, the provisions of section 255 represent the most significant governmental action for people with disabilities since the passage of the Americans with Disabilities Act of 1990. Public Law 101–336, 104 Stat. 327 (1990) (codified at 42 U.S.C. 12102(2)(A), 12181(9)) (ADA). Inability to use telecommunications equipment and services can be life-threatening in emergency situations, can severely limit educational and employment opportunities, and can otherwise interfere with full participation in business, family, social, and other activities. The Commission must do all it can to ensure that people with disabilities are not left behind in the telecommunications revolution and consequently isolated from contemporary life.

85. The Commission sets forth proposals to implement and enforce the requirement of section 255 that telecommunications offerings be accessible to the extent readily achievable. The centerpiece of these is a ''fast-track'' process designed to resolve many accessibility complaints informally, providing consumers quick solutions and freeing manufacturers and service providers from the burden of more structured complaint resolution procedures. In cases where fast-track solutions are not possible, however, or where there appears to be an underlying noncompliance with section 255, the Commission would pursue remedies through more conventional processes. In both cases, in assessing whether service providers and equipment manufacturers have met their accessibility obligations under section 255, the Commission would look favorably upon demonstrations by companies that they considered accessibility throughout the development of telecommunications products.

(2) Legal Basis

86. The proposed action is authorized under sections 1, 4(i), 10, 201, 202, 207, 208, 255, 303(b), 303(g), 303(j), 303(r) and 403 of the Communications Act, 47 U.S.C. 151, 154(i), 160, 201, 202, 207, 208, 255, 303(b), 303(g), 303(j), 303(r), 403.

(3) Description and Number of Small Entities Involved

87.The NPRM will apply to manufacturers of telecommunications equipment and customer premises equipment (CPE). In addition, telecommunications service providers of many types will be affected, including wireline common carriers and commercial mobile radio service (CMRS) providers. To the extent that software is integral to a telecommunication function, software developers or manufacturers may also be affected.

88. Commenters are requested to provide information regarding how many entities (overall) and how many small entities would be affected by the proposed rules in the NPRM. It should be noted that the resources of the regulated entity are taken into account in the determination of whether accessibility of a given product or service is readily achievable. Thus, there is an inherent consideration of the financial burden on the entity in its obligation to provide accessibility: if not readily achievable, the legal obligation is removed. However, all regulated entities are required to assess whether providing accessibility is readily achievable. Thus, an important issue for RFA purposes is not the absolute cost of providing accessibility, but, rather, the extent to which the cost of performing an assessment as to whether an accessibility feature is readily achievable is unduly burdensome on small entities.

89. The RFA directs agencies to provide a description of and, where feasible, an estimate of the number of small entities that may be affected by the proposed rules, if adopted. The RFA generally defines the term ''small entity'' as having the same meaning as the terms ''small business,'' ''small organization,'' and ''small governmental jurisdiction.'' In addition, the term ''small business'' has the same meaning as the term ''small business concern'' under the Small Business Act. A small business concern is one which: (1) Is independently owned and operated; (2) is not dominant in its field of operation; and (3) satisfies any additional criteria established by the Small Business Administration (SBA).[11] A small organization is generally ''any not-for-profit enterprise which is independently owned and operated and is not dominant in its field.''[12] Nationwide, as of 1992, there were approximately 275,801 small organizations.[13] The Commission further describes and estimates the number of small entity licensees and other covered entities that may be affected by the proposed rules, if adopted.

a. *Equipment manufacturers.* 90. The following chart contains estimated numbers of domestic entities that may be affected by this rulemaking. The data from which this chart was developed includes firm counts that reflect product lines not involved in telecommunications, as defined by the 1996 Act, and also includes overlapping firm counts and firms deliberately commingled to avoid disclosing the value of individual firms' equipment shipments for the reporting period.

Product class/ code	Product description	Estimated firm count	Comments
36611	Switching and switchboard equipment.	84	Includes central office switching equipment, PBX equipment, cellular mobile switching equipment.
36613	Carrier line equipment and modems	89	Includes repeaters, multiplex equipment, channel banks, subscriber loop and carrier line equipment, and modems.
36614	Other telephone and telegraph equipment.	215	Includes single line, ISDN, key and public pay telephone sets, cordless handsets, data communications equipment, video conferencing equipment, voice and call message processing equipment, call distributors, facsimile equipment.
36631	Communications systems and equipment.	346	Includes mobile cellular equipment, conventional and trunked system equipment, SONET-standard equipment.
36632	Broadcast, studio, and related electronic equipment.	172	Includes cable equipment possibly used to provide telephone service, such as subscriber equipment.
35715	Personal computers and workstations.	89	Includes personal computers with CPE capabilities.
35716	Portable computers	35	Typically with attached display.
35771	Computer peripheral equipment, not elsewhere classified.	259	Excludes common storage, scanning, and other peripherals itemized in census source document. Intended to include peripherals used for telecommunication function, and specialized CPE used in conjunction with computers. Includes keyboards, manual input devices such as mouses and scanners, voice recognition equipment (88 firms).
36798	Printed circuit assemblies	648	Includes communications printed board assemblies (211 firms) and ''other electronics,'' including office equipment and point of sales (182 firms) that would commonly involve telecommunications functions.
35751	Computer terminals	57	Includes remote batch terminals, displays, etc. For distributed computer systems involved in telecommunications, remote terminals and other components are probably essential to ensuring accessible telecommunications capabilities.
35772	Parts and subassemblies for computer peripherals and input/output equipment.	72	Includes funds transfer devices and point of sale terminals (29 firms).

b. Software. 91. Due to the convergence between telecommunications equipment, telecommunications services and the software used to control and regulate each, software developers and producers may be viewed as regulated entities under section 255. This is particularly true of software that is used to make traditional telecommunications devices operate with CPE designed for specific disabilities. The Commission seeks comment on the impact of its proposed rules on the small businesses within this industrial category.

c. Telecommunications service entities. (i) Introduction. 92. Commenters are requested to provide information regarding how many providers of telecommunications services, existing and potential, will be considered small businesses. The SBA has defined a small business for Radiotelephone Communications (SIC 4812) and Telephone Communications, Except Radiotelephone (SIC 4813), to be small entities when they have fewer than 1,500 employees.

93. The Commission seeks comment as to whether this definition is appropriate in this context. Additionally, the Commission requests each commenter to identify whether it is a small business under this definition. If the commenter is a subsidiary of another entity, this information should be provided for both the subsidiary and the parent corporation or entity.

94. The United States Bureau of the Census reports that, at the end of 1992, there were 3,497 firms engaged in providing telephone services, for at least one year. This number contains a variety of different categories of carriers, including local exchange carriers, interexchange carriers, competitive access providers, cellular carriers, other mobile service carriers, operator service providers, pay telephone providers, personal communications services (PCS) providers, covered specialized mobile

[11] Small Business Act, 15 U.S.C. 632 (1996).

[12] 5 U.S.C. 601(4).

[13] 1992 Economic Census, U.S. Bureau of the Census, Table 6 (special tabulation of data under contract to Office of Advocacy of the U.S. Small Business Administration).

radio providers, and resellers. It seems certain that some of those 3,497 telephone service firms may not qualify as small entities or small incumbent local exchange carriers (LECs) because they are not ''independently owned and operated.'' For example, a PCS provider that is affiliated with an interexchange carrier (IXC) having more than 1,500 employees would not meet the definition of a small business. The Commission tentatively concludes that fewer than 3,497 telephone service firms are small entity telephone service firms or small incumbent local exchange carriers.

95. According to the Telecommunications Industry Revenue: Telecommunications Relay Service Fund Worksheet Data (*TRS Worksheet*), there are 3,459 interstate carriers.[14] These carriers include, *inter alia*, local exchange carriers, wireline carriers and service providers, interexchange carriers, competitive access providers, operator service providers, pay telephone providers, providers of telephone toll service, providers of telephone exchange service, and resellers.

(ii) Wireline Carriers and Service Providers. 96. The SBA has developed a definition of small entities for telephone communications companies except radiotelephone (wireless) companies. The Census Bureau reports that, there were 2,321 such telephone companies in operation for at least one year at the end of 1992.[15] According to the SBA definition, as noted, a small business telephone company other than a radiotelephone company is one employing fewer than 1,500 persons. All but 26 of the 2,321 non-radiotelephone companies listed by the Census Bureau were reported to have fewer than 1,000 employees.

97. Thus, even if all 26 of those companies had more than 1,500 employees, there would still be 2,295 non-radiotelephone companies that might qualify as small entities or small incumbent LECs. The Commission does not have information regarding the number of carriers that are not independently owned and operated, and thus is unable at this time to estimate with greater precision the number of wireline carriers and service providers that would qualify as small business concerns under the SBA definition. Consequently, the Commission estimates that there are fewer than 2,295 small telephone communications companies other than radiotelephone companies.

(A) Incumbent Local Exchange Carriers. 98. Neither the Commission nor SBA has developed a definition for small providers of local exchange services. The closest applicable definition under the SBA rules is for telephone communications companies other than radiotelephone (wireless) companies. The most reliable source of information regarding the number of LECs nationwide of which the Commission is aware appears to be the data that the Commission collects annually in connection with the *TRS Worksheet.* According to the Commission's most recent data, 1,376 companies reported that they were engaged in the provision of local exchange services. Although it seems certain that some of these carriers are not independently owned and operated, or have more than 1,500 employees, the Commission is unable at this time to estimate with greater precision the number of LECs that would qualify as small business concerns under the SBA definition. Consequently, the Commission estimates that there are fewer than 1,376 small incumbent LECs.

99. Because the small incumbent LECs subject to these rules are either dominant in their field of operations or are not independently owned and operated, they are excluded (consistent with the Commission's prior practice) from the definition of ''small entity'' and ''small business concerns.'' Accordingly, the Commission's use of the terms ''small entities'' and ''small businesses'' does not encompass small incumbent LECs. Out of an abundance of caution, however, for regulatory flexibility analysis purposes, the Commission will consider small incumbent LECs within this analysis and use the term ''small incumbent LECs'' to refer to any incumbent LEC that arguably might be defined by SBA as a ''small business concern.''

(B) Interexchange Carriers. 100. Neither the Commission nor SBA has developed a definition of small entities specifically applicable to providers of interexchange services. The closest applicable definition under the SBA rules is for telephone communications companies except radiotelephone (wireless) companies. The most reliable source of information regarding the number of IXCs nationwide is the data that the Commission collects annually in connection with the *TRS Worksheet.* According to the Commission's most recent data, 149 companies reported that they were engaged in the provision of interexchange services. The Commission does not have information on the number of carriers that are not independently owned and operated, nor have more than 1,500 employees, and thus the Commission is unable at this time to estimate with greater precision the number of IXCs that would qualify as small business concerns under the SBA definition. Consequently, the Commission estimates that there are fewer than 149 small entity IXCs.

(C) Competitive Access Providers and Competitive Local Exchange Carriers. 101. Neither the Commission nor SBA has developed a definition of small entities specifically applicable to providers of competitive access services (CAPs) and competitive local exchange carriers (CLECs). The closest applicable definition under the SBA rules is for telephone communications companies except radiotelephone (wireless) companies. The most reliable source of information regarding the number of CAPs and CLECs nationwide is the data that the Commission collects annually in connection with the *TRS Worksheet.* According to the Commission's most recent data, 119 companies reported that they were engaged in the provision of competitive access services. The Commission does not have information on the number of carriers that are not independently owned and operated, nor have more than 1,500 employees, and thus is unable at this time to estimate with greater precision the number of CAPs that would qualify as small business concerns under the SBA definition. Consequently, the Commission estimates that there are fewer than 119 small CAPs.

(D) Operator Service Providers. 102. Neither the Commission nor SBA has developed a definition of small entities specifically applicable to providers of operator services. The closest applicable definition under the SBA rules is for telephone communications companies except radiotelephone (wireless) companies. The most reliable source of information regarding the number of operator service providers nationwide is the data that the Commission collects annually in connection with the *TRS Worksheet.* According to the Commission's most recent data, 27 companies reported that they were engaged in the provision of operator services. The Commission does not have information on the number of carriers that are not independently owned and operated, nor have more than 1,500 employees, and thus is unable at this time to estimate with greater precision the number of operator service

[14] Federal Communications Commission, Common Carrier Bureau, Industry Analysis Division, Carrier Locator: Interstate Service Providers, Figure 1 (Types of Interstate Service Providers) (Nov. 1997) (*TRS Data*).

[15] U.S. Department of Commerce, Bureau of the Census, 1992 Census of Transportation, Communications, and Utilities: Establishment and Firm Size, at Firm Size 1–123 (1995) (1992 Census).

providers that would qualify as small business concerns under the SBA definition. Consequently, the Commission estimates that there are fewer than 27 small operator service providers.

(E) Pay Telephone Providers. 103. Neither the Commission nor SBA has developed a definition of small entities specifically applicable to pay telephone providers. The closest applicable definition under SBA rules is for telephone communications companies except radiotelephone (wireless) companies. The most reliable source of information regarding the number of pay telephone providers nationwide is the data that the Commission collects annually in connection with the *TRS Worksheet.* According to the Commission's most recent data, 533 companies reported that they were engaged in the provision of pay telephone services. The Commission does not have information on the number of carriers that are not independently owned and operated, nor have more than 1,500 employees, and thus is unable at this time to estimate with greater precision the number of pay telephone providers that would qualify as small business concerns under SBA definition. Consequently, the Commission estimates that there are fewer than 533 small pay telephone providers.

(F) Resellers (Including Debit Card Providers). 104. Neither the Commission nor SBA has developed a definition of small entities specifically applicable to resellers. The closest applicable SBA definition for a reseller is a telephone communications company except radiotelephone (wireless) companies. However, the most reliable source of information regarding the number of resellers nationwide is the data that the Commission collects annually in connection with the *TRS Worksheet.* According to the Commission's most recent data, 345 companies reported that they were engaged in the resale of telephone service. The Commission does not have information on the number of carriers that are not independently owned and operated, nor have more than 1,500 employees, and thus the Commission is unable at this time to estimate with greater precision the number of resellers that would qualify as small entities or small incumbent LEC concerns under the SBA definition. Consequently, the Commission estimates that there are fewer than 345 small entity resellers.

(iii) International Service Providers. 105. The Commission has not developed a definition of small entities applicable to licensees in the international services. Therefore, the applicable definition of small entity is the definition under the SBA rules applicable to Communications Services, Not Elsewhere Classified (NEC) (13 CFR 120.21). This definition provides that a small entity is expressed as one with $11.0 million or less in annual receipts. According to the Census Bureau, there were a total of 848 communications services, NEC, in operation in 1992, and a total of 775 had annual receipts of less than $9.999 million. The Census report does not provide more precise data. Many of these services do not have specified uses and it is uncertain, at this point in time, if they will ultimately provide telecommunications services.

(A) International Public Fixed Radio (Public and Control Stations). 106. There are 15 licensees in this service. The Commission does not request or collect annual revenue information, and thus is unable to estimate the number of international public fixed radio licensees that would constitute a small business under the SBA definition.

(B) Fixed Satellite Transmit/Receive Earth Stations. 107. There are approximately 4,200 earth station authorizations, a portion of which are Fixed Satellite Transmit/Receive Earth Stations. The Commission does not request or collect annual revenue information, and thus is unable to estimate the number of the earth stations that would constitute a small business under the SBA definition.

(C) Fixed Satellite Small Transmit/Receive Earth Stations. 108. There are 4,200 earth station authorizations, a portion of which are Fixed Satellite Small Transmit/Receive Earth Stations. The Commission does not request or collect annual revenue information, and thus is unable to estimate the number of fixed satellite transmit/receive earth stations may constitute a small business under the SBA definition.

(D) Fixed Satellite Very Small Aperture Terminal (VSAT) Systems. 109. These stations operate on a primary basis, and frequency coordination with terrestrial microwave systems is not required. Thus, a single ''blanket'' application may be filed for a specified number of small antennas and one or more hub stations. The Commission has processed 377 applications. The Commission does not request or collect annual revenue information, and thus is unable to estimate of the number of VSAT systems that would constitute a small business under the SBA definition.

(E) Mobile Satellite Earth Stations. 110. There are two licensees. The Commission does not request or collect annual revenue information, and thus is unable to estimate whether either of these licensees would constitute a small business under the SBA definition.

(F) Space Stations (Geostationary). 111. Commission records reveal that there are 37 space station licensees. The Commission does not request or collect annual revenue information, and thus is unable to estimate of the number of geostationary space stations that would constitute a small business under the SBA definition.

(G) Space Stations (Non-Geostationary). 112. There are six Non-Geostationary Space Station licensees, of which only one system is operational. The Commission does not request or collect annual revenue information, and thus is unable to estimate of the number of non-geostationary space stations that would constitute a small business under the SBA definition.

(iv) Wireless Telecommunications Service Providers. 113. The Commission has not yet developed a definition of small entities with respect to the provision of CMRS services. Therefore, for entities not falling within other established SBA categories (*i.e.*, Radiotelephone Communications or Telephone Communications, Except Radiotelephone), the applicable definition of small entity is the definition under the SBA rules applicable to the ''Communications Services, Not Elsewhere Classified'' category. This definition provides that a small entity is one with $11.0 million or less in annual receipts (13 CFR 120.21). The Census Bureau estimates indicate that of the 848 firms in the ''Communications Services, Not Elsewhere Classified'' category, 775 are small businesses. It is not possible to predict which of these would be small entities (in absolute terms or by percentage) or to classify the number of small entities by particular forms of service.

(A) Cellular Radio Telephone Service. 114. The Commission has not developed a definition of small entities applicable to cellular licensees. Therefore, the applicable definition of small entity is the definition under the SBA rules applicable to radiotelephone companies. This definition provides that a small entity is a radiotelephone company employing no more than 1,500 persons. The size data provided by SBA does not enable the Commission to make a meaningful estimate of the number of cellular providers which are small entities because it combines all radiotelephone companies with 500 or more employees.

115. The Commission therefore has used the 1992 Census of Transportation, Communications, and Utilities,

conducted by the Bureau of the Census, which is the most recent information available. That census shows that only 12 radiotelephone firms out of a total of 1,178 such firms which operated during 1992 had 1,000 or more employees. Therefore, even if all 12 of these large firms were cellular telephone companies, all of the remainder were small businesses under the SBA definition. The Commission assumes that, for purposes of its evaluations and conclusions in this IRFA, all of the current cellular licensees are small entities, as that term is defined by SBA. In addition, although there are 1,758 cellular licenses, the Commission does not know the number of cellular licensees, since a cellular licensee may own several licenses.

(B) Broadband Personal Communications Service. 116. The broadband PCS spectrum is divided into six frequency blocks designated A through F. Pursuant to Section 24.720(b) of the Commission's Rules, the Commission has defined ''small entity'' for Block C and Block F licensees as firms that had average gross revenues of less than $40 million in the three previous calendar years. This regulation defining ''small entity'' in the context of broadband PCS auctions has been approved by SBA.

117. The Commission has auctioned broadband PCS licenses in all of its spectrum blocks A through F. The Commission does not have sufficient data to determine how many small businesses under the Commission's definition bid successfully for licenses in Blocks A and B. As of now, there are 89 non-defaulting winning bidders that qualify as small entities in the Block C auction and 93 non-defaulting winning bidders that qualify as small entities in the D, E, and F Block auctions. Based on this information, the Commission concludes that the number of broadband PCS licensees that would be affected by the proposals in the NPRM includes the 182 non-defaulting winning bidders that qualify as small entities in the C, D, E, and F Block broadband PCS auctions. Note that the number of successful bidders is not necessarily equivalent to the number of licensees, yet it is the best indicator that is currently available.

(C) Specialized Mobile Radio. 118. Pursuant to Section 90.814(b)(1) of the Commission's Rules, the Commission has defined ''small entity'' for geographic area 800 MHz and 900 MHz Specialized Mobile Radio (SMR) licenses as firms that had average gross revenues of less than $15 million in the three previous calendar years. This regulation defining ''small entity'' in the context of 800 MHz and 900 MHz SMR has been approved by SBA.

119. The proposals set forth in the NPRM may apply to SMR providers in the 800 MHz and 900 MHz bands. The Commission does not know how many firms provide 800 MHz or 900 MHz geographic area SMR service, or how many of these providers have annual revenues of less than $15 million.

120. The Commission recently held auctions for geographic area licenses in the 900 MHz SMR band. There were 60 winning bidders who qualified as small entities under the Commission's definition in the 900 MHz auction. Based on this information, the Commission concludes that the number of geographic area SMR licensees affected by the proposals set forth in the NPRM includes these 60 small entities.

121. Based on the auctions held for 800 MHz geographic area SMR licenses, there were 10 small entities currently holding 38 of the 524 licenses for the upper 200 channels of this service. However, the Commission has not yet determined how many licenses will be awarded for the lower 230 channels in the 800 MHz geographic area SMR auction. There is no basis to estimate, moreover, how many small entities within the SBA definition will win these licenses. Given the facts that nearly all radiotelephone companies have fewer than 1,000 employees and that no reliable estimate of the number of prospective 800 MHz SMR licensees can be made, the Commission assumes, for purposes of its evaluations and conclusions in this IRFA, that all of the licenses will be awarded to small entities, as that term is defined by SBA.

(D) 220 MHz Service.

122. Licensees for 220 MHz services that meet the definition of CMRS may be providers of telecommunications service. The Commission has classified providers of 220 MHz service into Phase I and Phase II licensees. There are approximately 3,800 non-nationwide Phase I licensees and 4 nationwide licensees currently authorized to operate in the 220 MHz band. The Commission has estimated that there are approximately 900 potential Phase II licensees. These licenses were scheduled to be auctioned in May 1998, but the auction has been delayed pending resolution of petitions for reconsideration.

123. At this time, however, there is no basis upon which to estimate definitively the number of 220 MHz service licensees, either current or potential, that are small businesses. To estimate the number of such entities that are small businesses, the Commission applies the definition of a small entity under SBA rules applicable to radiotelephone companies. This definition provides that a small entity is a radiotelephone company employing no more than 1,500 persons. However, the size data provided by the SBA do not allow the Commission to make a meaningful estimate of the number of 220 MHz providers that are small entities because they combine all radiotelephone companies with 500 or more employees.

124. The Commission therefore uses the 1992 Census of Transportation, Communications, and Utilities, conducted by the Bureau of the Census, which is the most recent information available. Data from the Census Bureau's 1992 study indicate that only 12 out of a total 1,178 radiotelephone firms which operated during 1992 had 1,000 or more employees—and these may or may not be small entities, depending on whether they employed more or less than 1,500 employees. But 1,166 radiotelephone firms had fewer than 1,000 employees and, therefore, under the SBA definition, are small entities. However, the Commission does not know how many of these 1,166 firms are likely to be involved in the provision of 220 MHz service.

(E) Mobile Satellite Services (MSS). 125. Mobile Satellite Services or Mobile Satellite Earth Stations are intended to be used while in motion or during halts at unspecified points. These stations operate as part of a network that includes a fixed hub or stations. The stations that are capable of transmitting while a platform is moving are included under Section 20.7(c) of the Commission's Rules as mobile services within the meaning of sections 3(27) and 332 of the Act. Those MSS services are treated as CMRS if they connect to the Public Switched Network (PSN) and also satisfy other criteria of section 332. Facilities provided through a transportable platform that cannot move when the communications service is offered are excluded from 47 CFR 20.7(c).

126. The MSS networks may provide a variety of land, maritime and aeronautical voice and data services. There are eight mobile satellite licensees. At this time, the Commission is unable to make a precise estimate of the number of small businesses that are mobile satellite earth station licensees and could be considered CMRS providers of telecommunications service.

(F) Paging. 127. Private and Common Carrier Paging. The Commission has proposed a two-tier definition of small businesses in the context of auctioning licenses in the Common Carrier Paging

and exclusive Private Carrier Paging services. Under the proposal, a small business will be defined as either (1) an entity that, together with its affiliates and controlling principals, has average gross revenues for the three preceding years of not more than $3 million; or (2) an entity that, together with affiliates and controlling principals, has average gross revenues for the three preceding calendar years of not more than $15 million. Because the SBA has not yet approved this definition for paging services, the Commission will utilize the SBA's definition applicable to radiotelephone companies, *i.e.*, an entity employing no more than 1,500 persons. At present, there are approximately 24,000 Private Paging licenses and 74,000 Common Carrier Paging licenses. According to the most recent Telecommunications Industry Revenue data, 364 carriers reported that they were engaged in the provision of either paging or other mobile services, which are placed together in the data. The Commission does not have data specifying the number of these carriers that are not independently owned and operated or have more than 1,500 employees, and thus is unable at this time to estimate with greater precision the number of paging carriers that would qualify as small business concerns under the SBA's definition. Consequently, the Commission estimates that there are fewer than 364 small paging carriers that may be affected by the proposed rules, if adopted. The Commission estimates that the majority of private and common carrier paging providers would qualify as small entities under the SBA definition.

(G) Narrowband PCS. 128. The Commission has auctioned nationwide and regional licenses for narrowband PCS. The Commission does not have sufficient information to determine whether any of these licensees are small businesses within the SBA-approved definition. At present, there have been no auctions held for the MTA and Basic Trading Area (BTA) narrowband PCS licenses. The Commission anticipates a total of 561 MTA licenses and 2,958 BTA licenses will be awarded in the auctions. Those auctions, however, have not yet been scheduled. Given that nearly all radiotelephone companies have fewer than 1,500 employees and that no reliable estimate of the number of prospective MTA and BTA narrowband licensees can be made, the Commission assumes that all of the licenses will be awarded to small entities, as that term is defined by the SBA.

(H) Air-Ground Radiotelephone Service. 129. The Commission has not adopted a definition of small business specific to the Air-Ground Radiotelephone Service, which is defined in Section 22.99 of the Commission's rules. Accordingly, the Commission will use the SBA definition applicable to radiotelephone companies, *i.e.*, an entity employing no more than 1,500 persons. There are approximately 100 licensees in the Air-Ground Radiotelephone Service, and the Commission estimates that almost all of them qualify as small under the SBA definition.

(I) Local Multipoint Distribution Service (LMDS). 130. LMDS licensees may use spectrum for any number of services. It is anticipated that the greatest intensity of use will be for either radio telephone or pay television services. SBA has developed definitions applicable to each of these services, however, because pay television is not a telecommunications service subject to section 255, it is not relevant to this IRFA.

131. The Commission has not developed a definition of small entities applicable to LMDS licensees, which is a new service. In the LMDS Order (62 FR 16514, Apr. 7, 1997) the Commission adopted criteria for defining small businesses for determining bidding credits in the auction, but the Commission believes these criteria are applicable for evaluating the burdens imposed by section 255. The Commission defines a small business as an entity that, together with affiliates and controlling principals, has average gross revenues not exceeding $40 million for the three preceding years. Additionally, small entities are those which together with affiliates and controlling principals, have average gross revenues for the three preceding years of more than $40 million but not more than $75 million.

132. Upon completion of the auction 93 of the 104 bidder qualified as small entities, smaller businesses, or very small businesses. These 93 bidders won 664 of the 864 licenses. The Commission estimates that all of these 93 bidders would qualify as small under the SBA definitions, but the Commission cannot yet determine what percentage would be offering telecommunications services.

(J) Rural Radiotelephone Service. 133. The Commission has not adopted a definition of small entity specific to the Rural Radiotelephone Service. A significant subset of the Rural Radiotelephone Service is the Basic Exchange Telephone Radio Systems (BETRS). The Commission will use the SBA's definition applicable to radiotelephone companies, i.e., an entity employing no more than 1,500 persons. There are approximately 1,000 licensees in the Rural Radiotelephone Service, and the Commission estimates that almost all of them qualify as small entities under the SBA's definition.

(K) Wireless Communications Services. 134. This service can be used for fixed, mobile, radiolocation and digital audio broadcasting satellite uses. The Commission defined small business for the wireless communications services (WCS) auction as an entity with average gross revenues of $40 million for each of the three preceding years, and a very small business as an entity with average gross revenues of $15 million for each of the three preceding years. The Commission auctioned geographic area licenses in the WCS service. In the auction, there were seven winning bidders that qualified as very small business entities, and one that qualified as a small business entity. The Commissin concludes that the number of geographic area WCS licensees affected includes these eight entities.

(L) 39 GHz Band. 135. The Commission has not developed a definition of small entities applicable to 39 GHz band licensees. Therefore, the applicable definition of small entity is the definition under the SBA rules applicable to radiotelephone companies. This definition provides that a small entity is a radiotelephone company employing no more than 1,500 persons. Since the Regulatory Flexibility Act amendments were not in effect until the record in this proceeding was closed, the Commission was unable to request information regarding the potential number of small businesses interested in the 39 GHz frequency band and is unable at this time to determine the precise number of potential applicants which are small businesses.

136. The size data provided by SBA does not enable the Commission to make a meaningful estimate of the number of cellular providers which are small entities because it combines all radiotelephone companies with 500 or more employees.[16] The Commission therefore has used the 1992 Census of Transportation, Communications, and Utilities, conducted by the Bureau of the Census, which is the most recent information available. That census shows that only 12 radiotelephone firms out of a total of 1,178 such firms which operated during 1992 had 1,000 or more

[16] U.S. Small Business Administration 1992 Economic Census Employment Report, Bureau of the Census, U.S. Department of Commerce, SIC 4812 (radiotelephone communications industry data adopted by the SBA Office of Advocacy).

employees. Therefore, a majority of 39 GHz entities providing radiotelephone services could be small businesses under the SBA definition.

137. However, in the 39 GHz Band NPRM and Order, 61 FR 02452, Jan. 26, 1996, the Commission proposed to define a small business as an entity that, together with affiliates and attributable investors, has average gross revenues for the three preceding years of less than $40 million. The Commission has not yet received approval by the SBA for this definition. The Commission assumes, for purposes of its evaluations, that nearly all of the 39 GHz licensees will be small entities, as that term is defined by the SBA.

(4) Reporting, Recordkeeping, and Other Compliance Requirements

138. As the Commission has noted, the objective of section 255 is for persons with disabilities to have increased access to telecommunications. Both equipment manufacturers and telecommunications service providers are obligated to provide accessibility for persons with any one or more of different disabilities to the extent that it is readily achievable for them to do so. So, in the broadest sense, compliance consists of the on-going, disciplined, and systematic effort to provide the greatest level of accessibility. Much of the NPRM deals with behaviors which demonstrate that such effort and would be looked upon favorably in the event of a filed complaint.

139. The only actual recordkeeping requirement that the Commission proposes is for each covered entity to provide a point of contact for referral of consumer problems. This person would represent the covered entity during the ''fast-track problem-solving'' phase which would precede the filing of any form of complaint. In the NPRM, the Commission suggests and seeks comment on a one-week period in which the manufacturer or service provider should resolve the customer's problem. Although the Commission wishes to encourage speedy responses, it recognizes that there may be circumstances which call for an extension of the time period. In such instances, the Commission reserves the discretion to grant requests. The Commission seeks comment on whether the one-week time period, and whether the informal means of requesting extensions would be disproportionately burdensome on small businesses.

140. Despite the lack of any formal recordkeeping requirement, in order to respond to ''fast-track'' inquiries, companies may chose to keep records at their own discretion on the way the company has chosen to implement its own disability initiatives. This self-imposed recordkeeping will enable them to respond in a more timely fashion. Likewise the Commission seeks comment on whether this implicit burden needs to be recognized, and, if so, whether there is a disproportionate impact on small businesses.

141. An additional recordkeeping requirement for which the Commission seeks comment would be to have equipment manufacturers acknowledge their section 255 obligations on the same form used for filing for equipment authorization with the Office of Engineering and Technology. (See 47 CFR 2.901–2.1093.) Similarly, the Commission seeks comment on which of the filings for telecommunications service providers would provide a comparable opportunity to indicate awareness of their own section 255 obligations. Another option, beyond the scope of section 255 and thus requiring a separate rulemaking, might be to design a consolidated form to be used by service providers for reporting all required information to the Commission and including awareness of entities' section 255 obligations as one small part. Although the Commission perceives the section 255 reporting burden to be minimal, as in checking off a box on a form required for other purposes, the Commission requests comment on how such requirements can be modified to reduce the burden on small entities and still meet the objectives of this proceeding.

(5) Steps Taken To Minimize Significant Economic Impact on Small Entities, and Significant Alternatives Considered

142. In the Notice of Inquiry, the Commission sought comment on three possible approaches for implementing and enforcing the provisions of section 255: (1) Rely on case-by-case determinations; (2) issue guidelines or a policy statement; or (3) promulgate rules setting forth procedural or performance requirements intended to promote accessibility.[17]

143. The NPRM principally proposes procedural requirements as a practical, common sense means to ensure that consumers with disabilities have access to telecommunications services and equipment.

144. The use of case-by-case determinations exclusively, in lieu of any rules, was considered but tentatively discarded in the NPRM because it was believed that in a rapidly changing market with unpredictable technological breakthroughs, the slow development of case law would not be sufficient to guide covered entities to an understanding of their accessibility obligations.

145. The issuance of guidelines or a policy statement was also considered but tentatively discarded, because of the Commission's view that a greater degree of regulatory and administrative certainty will best serve the interests of both consumers and businesses (including covered entities) that must comply with section 255. Guidelines or a policy statement might serve the purpose of informing case-by-case determinations in complaint proceedings and lending some predictability of outcomes in these proceedings. Moreover, the Commission tentatively decided that, in order for accessibility to be addressed in a pro-active manner, equipment manufacturers and service providers should have clear expressions of the demands section 255 places on their operations before the beginning of the design process. The Commission tentatively concluded, however, that the potential drawbacks of exclusive reliance on case-by-case determinations as a means of implementing section 255 would not be sufficiently diminished by the adoption of guidelines or a policy statement.

146. Also considered and tentatively rejected by the Commission was the option of promulgating specific performance requirements. Such an approach—under which the Commission would attempt to establish an array of specific parameters for features and functions across a broad range of telecommunications services and equipment—was viewed as potentially burdensome to covered entities, as well as being fraught with other potential problems. For example, rapid changes in technology could make Commission performance requirements obsolete in rapid fashion. This would make it necessary for the Commission to frequently revise its performance requirements in order to attempt to keep pace with these technological changes. These frequent revisions would impose burdens on covered entities and potentially cause confusion in the telecommunications marketplace. In addition, the Commission tentatively has decided that the promulgation of rules governing the design process, would impose burdens on covered entities whose resources would be better

[17] Implementation of Section 255 of the Telecommunications Act of 1996: Access to Telecommunications Services, Telecommunications Equipment, and Customer Premises Equipment by Persons with Disabilities, WT Docket No. 96–198, Notice of Inquiry, 11 FCC Rcd 19152, 19163 (para. 7) (1996) (*Notice of Inquiry*).

spent in achieving and improving accessibility.

147. As a result of the Commission's tentative decision to rely primarily on procedural rules, it has taken several steps to minimize burdens on all regulated entities. First, the Commission has sought to provide incentives to industry for early and on-going consideration of accessibility issues. In particular, the Commission will look favorably upon efforts to implement the Access Board's guidelines such as formalizing self-assessment, external outreach, internal management, and user information and support to address accessibility issues. Second, the Commission has attempted to unravel the statutory terminology to give guidance on the interpretation of key language within the telecommunications context. For example, ''readily achievable'' is explored in great depth to explicate feasibility, expense, and practicality elements. Third, the Commission has intended to fashion efficient, consumer-friendly means of dealing with problems. By instituting a pre-complaint process in a fast-track, problem-solving phase, the Commission is attempting to implement the objectives of the statute in a cooperative, as opposed to adversarial, manner. The Commission welcomes comments on the extent to which the tentative approach it has adopted in the NPRM is likely to further the goals of section 255 without creating an unfair economic impact on small entities.

148. The Commission believes it has reduced burdens wherever possible. For burdens imposed by achieving accessibility, the structure of the statute inherently acknowledges varying degrees of economic impact. The ''readily achievable'' standard is proportional, not absolute, thereby adjusting the burden of providing accessible features to be commensurate with the resources of the covered entity.

149. For burdens associated with enforcement, the innovation of the ''fast-track'' problem solving phase is an outgrowth of the desire to find immediate, practical solutions to consumers' problems in obtaining accessible or compatible equipment and services. It is anticipated that the pre-complaint process will significantly reduce the number of complaints, thus minimizing the burden on all covered entities of providing a legal defense. Furthermore, the range of choices for resolving complaints is designed to reduce costs to the opposing parties. Encouraging the use of streamlined informal complaints or alternative dispute resolution processes is primarily to benefit individual plaintiffs who may be persons with disabilities with limited financial resources, but should similarly enable covered entities to defend at lesser cost.

150. To minimize any negative impact, however, the Commission seeks comment on the nature of incentives for small entities, which will redound to their benefit. The Commission will continue to examine alternatives in the future with the objectives of eliminating unnecessary regulations and minimizing significant economic impact on small entities. The Commission seeks comment on significant alternatives interested parties believe it should adopt.

(6) Federal Rules Which Overlap, Duplicate, or Conflict With These Rules

151. Section 255(e) directs the Access Board to develop equipment accessibility guidelines ''in conjunction with'' the Commission, and to periodically review and update the guidelines. The Commission views these guidelines as a starting point for the implementation of section 255, but because they do not cover telecommunications services, the Commission must necessarily adapt these guidelines in its comprehensive implementation scheme. As such, it is the Commission's tentative view that the proposed rules do not overlap, duplicate, or conflict with the Access Board Final Rule, 36 CFR Part 1193.

VI. Ordering Clauses

152. Accordingly, it is ordered, pursuant to sections 1, 4(i), 8(d), 8(g), 201, 202, 207, 208, 251(a)(2), 255, 303(r), 307, 312, 403 and 503(b) of the Communications Act, 47 U.S.C. 151, 154(i), 158(d), 158(g), 201, 202, 207, 208, 251(a)(2), 255, 303(r), 307, 312, 403, 503(b), that notice is hereby given of the proposed regulatory changes described in the NPRM, and that comment is sought on these proposals.

153. It is further ordered that the Commission's Office of Public Affairs, Reference Operations Division, shall send a copy of this NPRM, including the Initial Regulatory Flexibility Analysis, to the Chief Counsel for Advocacy of the Small Business Administration.

List of Subjects in 47 CFR Part 1

Administrative practice and procedure, Individuals with disabilities, Reporting and recordkeeping requirements, Telecommunications.

Federal Communications Commission.

Magalie Roman Salas,

Secretary.

[FR Doc. 98–13806 Filed 5–21–98; 8:45 am]

BILLING CODE 6712–01–P

Reader Aids

Federal Register

Vol. 63, No. 99

Friday, May 22, 1998

CUSTOMER SERVICE AND INFORMATION

Federal Register/Code of Federal Regulations

General Information, indexes and other finding aids	**202–523–5227**
Laws	**523–5227**

Presidential Documents

Executive orders and proclamations	**523–5227**
The United States Government Manual	**523–5227**

Other Services

Electronic and on-line services (voice)	**523–4534**
Privacy Act Compilation	**523–3187**
Public Laws Update Service (numbers, dates, etc.)	**523–6641**
TTY for the deaf-and-hard-of-hearing	**523–5229**

ELECTRONIC RESEARCH

World Wide Web

Full text of the daily Federal Register, CFR and other publications:

http://www.access.gpo.gov/nara

Federal Register information and research tools, including Public Inspection List, indexes, and links to GPO Access:

http://www.nara.gov/fedreg

E-mail

PENS (Public Law Electronic Notification Service) is an E-mail service that delivers information about recently enacted Public Laws. To subscribe, send E-mail to

listproc@lucky.fed.gov

with the text message:

subscribe publaws-l <firstname> <lastname>

Use listproc@lucky.fed.gov only to subscribe or unsubscribe to PENS. We cannot respond to specific inquiries at that address.

Reference questions. Send questions and comments about the Federal Register system to:

info@fedreg.nara.gov

The Federal Register staff cannot interpret specific documents or regulations.

FEDERAL REGISTER PAGES AND DATES, MAY

24097–24382 1
24383–24738 4
24739–24910 5
24911–25152 6
25153–25386 7
25387–25746 8
25747–26062 11
26063–26420 12
26421–26710 13
26711–26954 14
26955–27192 15
27193–27438 18
27439–27662 19
27663–27814 20
27815–28216 21
28217–28474 22

CFR PARTS AFFECTED DURING MAY

At the end of each month, the Office of the Federal Register publishes separately a List of CFR Sections Affected (LSA), which lists parts and sections affected by documents published since the revision date of each title.

3 CFR

Proclamations:
7088 24383
7089 25145
7090 25147
7091 25149
7092 25151
7093 26415
7094 26711
7095 27191
7096 27763
7097 27813

Executive Orders:
9080 26709
10692 26709
12377 26709
13081 24385
13082 26709
13083 27651
13084 27655

Administrative Orders:
Notices:
Notice of May 18, 1998 27661
Presidential Determinations:
No. 98–21 of April 28, 1998 26419
No. 98–22 of May 13, 1998 27765

5 CFR

351 26421
630 26421
1605 24380

Proposed Rules:
351 26531

7 CFR

301 .....25153, 25747, 25748, 27439
723 26713
979 25387
982 27815
1205 27818
3017 27667

Proposed Rules:
1 24467
59 27502
210 .....24686, 25569, 27162
220 .....24686, 25569, 27162
271 .....24985, 26250
273 27511
274 27511
278 .....24985, 26250
279 .....24985, 26250
958 26999
1160 28292
1710 24995
1714 24995
3015 28294
3016 28294
3019 28294

8 CFR

3 .....27441, 27823
213 27193
236 27441
240 27823
245 27823
274a 27823
299 27823

9 CFR

Proposed Rules:
93 26099
130 24473

10 CFR

11 25156
25 25156
60 26955
72 26955
73 26955
74 26955
75 26955
430 25996
1703 27667

Proposed Rules:
70 27870

12 CFR

Ch. III 25157
Ch. VII 24097
330 25750
703 24103
704 24103
960 27668
1720 26063

Proposed Rules:
922 26532
931 26532
933 26532
934 26532
935 25718
938 25718
941 26532
970 25718

13 CFR

120 24739

Proposed Rules:
120 .....24753, 27219

14 CFR

11 25572
21 26422
27 26422
36 26063
39 .....24210, 24387, 24389, 24740, 24742, 24911, 24913, 24914, 24915, 25158, 25389, 26063, 26425, 26426, 26427, 26429, 26439, 26714, 26964, 26966, 26968, 27195, 27197, 27450, 27452, 27455, 27465,

27674, 27676, 27834, 28217, 28218
71 .....24389, 24390, 24744, 24745, 26445, 26446, 26447, 26448, 26449, 26450, 26451, 26969, 26970, 26971, 26972, 26973, 26974, 26975, 26976, 26977, 26978, 27199, 27474, 27476, 27477, 27478, 27479, 27480
91.....26684
95.....27205
97 .....25160, 25161, 28220, 28222, 28224
135.....25572
207.....28225
208.....28225
212.....28225
380.....28225
Proposed Rules:
39 .....24136, 24138, 24756, 24758, 24760, 24762, 25179, 25180, 25182, 25781, 25787, 26100, 26102, 26104, 26106, 26107, 26109, 26111, 26112, 26742, 27001, 27002, 27011, 27514, 27516, 27685, 27687, 27688, 27690, 27692, 27694, 27696, 27870, 27872, 28294, 28299
71 .....24140, 24500, 24764, 24995, 27012, 27013, 27014, 27015, 27160, 27519
91.....27876
108.....26706
150.....27876

15 CFR

270.....24917
902.....27481, 27485
911.....24917
921.....26716

16 CFR

260.....24240
Proposed Rules:
Ch. I 24996
1615.....27877, 27885
1616.....27877, 27885

17 CFR

4.....24390
Proposed Rules:
1.....24142
34.....26114
35.....26114
423.....25417

18 CFR

Proposed Rules:
161.....27526
385.....27529

19 CFR

101.....24746
191.....27489
351.....24391
354.....24391
Proposed Rules:
123.....27533

20 CFR

404.....24927
416.....24927

21 CFR

3.....26690
5.....26690, 27207
10.....26690
16.....26690
25.....26690
50.....26690
56.....26690
58.....26690
71.....26690
101.....26717, 26978
165.....25764
178.....27835
184.....24416
200.....26690
201.....26690, 27836
207.....26690
210.....26690
211.....26690
310.....26690
312.....26690
314.....26690
315.....28301
369.....26690
430.....26066
431.....26066
432.....26066
433.....26066
436.....26066
440.....26066
441.....26066
442.....26066
443.....26066
444.....26066
446.....26066
448.....26066
449.....26066
450.....26066
452.....26066
453.....26066
455.....26066
460.....26066
510 .....24105, 25163, 26981, 27844
520.....26981
522 .....24106, 24420, 26981
524.....26981
529.....24105, 25163
556.....24106
558 .....24420, 26719, 27844
601.....28301
800.....26690
801.....24934
803.....26069
804.....26069
812.....26690
1240.....26077
Proposed Rules:
3.....26694
5.....26694
10.....26694
16.....26694
25.....26694
50.....26694
56.....26694
58.....26694
71.....26694
100.....27502
101 .....24253, 24593, 27016
120.....24253
165.....25789
200.....26694
201.....26694
207.....26694, 26744
210.....26694
211.....26694
310.....26694
312.....26694
314.....26694
334.....27886
369.....26694
429.....26694
430.....26127
431.....26127
432.....26127
433.....26127
436.....26127
440.....26127
441.....26127
442.....26127
443.....26127
444.....26127
446.....26127
449.....26127
450.....26127
452.....26127
453.....26127
455.....26127
460.....26127
800.....26694
803.....26129
804.....26129
807.....26744
812.....26694
874.....25794
1271.....26744

22 CFR

41.....24107

23 CFR

Proposed Rules:
658.....27228

24 CFR

982.....27434
3280.....26386
Proposed Rules:
6.....26022
180.....26022
200.....26702
203.....24736
207.....26702
570.....26022
888.....24846
3280.....26392

26 CFR

Proposed Rules:
1 .....24765, 25796, 27534

27 CFR

Proposed Rules:
4.....27017

28 CFR

2 .....25769, 25770, 25771
51.....24108

29 CFR

4044.....26982
4231.....24421
Proposed Rules:
Ch. XVII 27698
1910.....24501
2700.....25183

30 CFR

100.....26719
202 .....26362, 27677, 28453
203.....24747
216 .....26362, 27677, 28453
250 .....26362, 27677, 28453
918.....25391
920.....26451
Proposed Rules:
56.....26756
57.....26756
62.....26756
70.....26756
71.....26756
218.....25187
250.....25187
256.....25187
917.....27229, 27698
934.....25428

31 CFR

285.....25136
515.....27348, 27349
537.....27846
Proposed Rules:
103.....27230
208.....26561

32 CFR

199.....27677
323.....25772
507.....27208
701.....25773
706.....24747
2101.....25736

33 CFR

100 .....24109, 24425, 27454
117 .....24426, 26983, 27679
165 .....24109, 24425, 25164, 27680, 27852
207.....24427
Proposed Rules:
Ch. I 26756
20.....27700
100.....25187
117.....27240, 27241
165 .....25189, 27019, 27243, 27893

36 CFR

223.....24110
Proposed Rules:
211.....27245

37 CFR

260.....25394
Proposed Rules:
201.....26756
256.....26756

38 CFR

21.....26455, 27853
Proposed Rules:
20.....27534
21.....27701

39 CFR

241.....25166

40 CFR

9.....26719
51.....24429
52 .....24114, 24115, 24434, 24435, 24748, 24935, 25167, 25415, 25773, 26455, 26460, 26462, 26720, 27489, 27492
60.....24436, 27854
61.....27854
62.....24841, 27494
63 .....24116, 24436, 24749,

26078, 26463, 27212
76 24116
80 24117
81 ....24445, 24748
82 ....26983, 28251
85 24429
86 24446
148 24596
156 25168
180 ....24118, 24119, 24450, 24451, 24452, 24936, 24939, 24941, 24949, 24955, 25775, 26082, 26089, 26097, 26466, 26472, 26473, 26481, 26986, 28253, 28258
194 27354
261 ....24976, 24963
268 24596
271 24453
279 24963
281 24453
300 ....25169, 27855
302 24596
721 24120

Proposed Rules:

22 25006
51 25902
52 ....25191, 25796, 26561, 26562, 26564, 27541, 27895, 27897
59 25006
60 24515
62 27542
63 ....24515, 24765, 26561, 27247
72 28032
75 28032
76 25902
81 27247
89 28309
96 25092
131 26565
141 ....25430, 26137, 27020
142 ....25430, 27020
194 27901
258 25430
260 25430
261 ....25006, 25430, 25796
264 25430
265 25430
266 25430
270 25430
279 ....25006, 25430
300 28317

41 CFR

Ch. 301 26488
101-35 27682

42 CFR

60 25777
409 26252
410 ....26252, 26318
411 26252
412 26318
413 ....26252, 26318
415 26318
422 25360
424 26252
483 26252
485 26318
489 26252
493 722

Proposed Rules:

405 ....25576, 26565
412 ....25576, 26565
413 ....25576, 26565, 27251

44 CFR

64 27496
65 ....27856, 28261, 28265, 28267, 28268
67 ....28273, 28280
206 24969

Proposed Rules:

67 ....28323, 28331
206 ....24143, 25010

45 CFR

1215 26488
2507 26488

Proposed Rules:

46 27794
142 25272

46 CFR

Proposed Rules:

Ch. I 26756
1 26566
5 27700
10 26566

47 CFR

0 ....24121, 25778
1 ....24121, 24126, 26992
43 24120
54 27857
63 24120
64 24120
68 25170
69 ....26495, 26497
73 ....24454, 24970, 26992, 26993, 27212, 27498, 27857, 27858, 27859
101 ....26502, 27625

Proposed Rules:

Ch. 1 ....26758, 27021
0 26758
1 ....26758, 28456
13 26758
22 ....26138, 26758
24 26758
26 26758
27 26758
28 26758
54 ....27542, 28339
61 25811
64 26138
73 ....24517, 24518, 27544, 27902
76 ....24145, 27545
80 26758
87 26758
90 26758
95 26758
97 26758
101 26758

48 CFR

225 28284
232 27682
252 ....27682, 28284
401 26993
402 26993
403 26993
407 26993
408 26993
409 26993
411 26993
416 26993
419 26993
422 26993
424 26993
425 26993
426 26996
432 26993
434 26993
436 26993
452 26993
970 25779
1816 28285
1842 27859
1853 27859
2802 26738
2846 26738
5243 24129
5252 24129

Proposed Rules:

1 25382
4 25382
12 25382
14 25382
19 25382
26 25382
27 25382
32 25382
41 25382
52 25382
204 25438
208 25438
213 25438
216 25438
217 25438
219 25438
223 25438
225 25438
237 25438
242 25438
246 25438
247 25438
253 25438
1609 27902

49 CFR

223 24630
232 ....24130, 27212
239 24630
365 28286
372 28286
373 28286
374 28286
375 27126
377 ....27126, 28286
393 24454
553 26508
1152 28287
1155 28287

Proposed Rules:

195 27903
393 26759
544 24519
575 27911
1146 27253

50 CFR

17 ....25177, 26517
23 26739
229 27860
285 27862
600 ....24212, 24970, 26250, 27213
622 ....27485, 27499
648 ....25415, 27481, 27866
660 ....24970, 24973, 26250
679 ....24984, 27869

Proposed Rules:

17 ....26764, 27255, 28343
20 ....27548, 28343
217 24148
300 24751
600 ....24522, 26570
622 24522
648 ....25442, 27256, 27550
654 26765
660 27035

REMINDERS

The items in this list were editorially compiled as an aid to Federal Register users. Inclusion or exclusion from this list has no legal significance.

RULES GOING INTO EFFECT MAY 22, 1998

AGRICULTURE DEPARTMENT

Agricultural Marketing Service

Cherries (tart) grown in—

Michigan et al.; published 4-22-98

DEFENSE DEPARTMENT

Acquisition regulations:

Domestic source restrictions waiver; published 5-22-98

ENVIRONMENTAL PROTECTION AGENCY

Air quality implementation plans; approval and promulgation; various States:

Illinois; published 3-23-98

Ohio; published 3-23-98

Pesticides; tolerances in food, animal feeds, and raw agricultural commodities:

Bacillus thuringiensis subspecies tolworthi Cry9C protein and genetic material necessary for production in corn; published 5-22-98

Hydroxyethylidine diphosphonic acid; published 5-22-98

INTERIOR DEPARTMENT

Fish and Wildlife Service

Endangered and threatened species:

Pallid manzanita; published 4-22-98

NATIONAL AERONAUTICS AND SPACE ADMINISTRATION

Acquisition regulations:

Technical performance incentive guidance; published 5-22-98

TRANSPORTATION DEPARTMENT

Coast Guard

Ports and waterways:

Hudson River, NY; safety zone; published 5-21-98

TRANSPORTATION DEPARTMENT

Federal Aviation Administration

Airworthiness directives:

Avions Pierre Robin; published 4-24-98

McDonnell Douglas; published 4-17-98

TRANSPORTATION DEPARTMENT

Federal Highway Administration

Motor carrier safety standards:

Technical corrections; published 5-22-98

COMMENTS DUE NEXT WEEK

AGRICULTURE DEPARTMENT

Agricultural Marketing Service

Cherries (tart) grown in—

Michigan et al.; comments due by 5-26-98; published 4-23-98

AGRICULTURE DEPARTMENT

Animal and Plant Health Inspection Service

Interstate transportation of animals and animal products (quarantine):

Brucellosis in cattle and bison—

State and area classifications; comments due by 5-26-98; published 3-25-98

AGRICULTURE DEPARTMENT

Grain Inspection, Packers and Stockyards Administration

Fees:

Official inspection and weighing services; comments due by 5-26-98; published 3-27-98

Official/unofficial weighing services; comments due by 5-29-98; published 3-30-98

ARCHITECTURAL AND TRANSPORTATION BARRIERS COMPLIANCE BOARD

Americans with Disabilities Act; implementation:

Accessibility guidelines for transportation vehicles—

Over-the-road buses; comments due by 5-26-98; published 3-25-98

DEFENSE DEPARTMENT

Acquisition regulations:

Comprehensive subcontracting plans; comments due by 5-26-98; published 3-26-98

Defense contracts; list of firms not eligible; comments due by 5-26-98; published 3-27-98

Spanish laws and insurance compliance; comments due by 5-26-98; published 3-27-98

ENERGY DEPARTMENT

Sales regulation:

Strategic petroleum reserve; standard sales provisions; comments due by 5-26-98; published 4-8-98

ENVIRONMENTAL PROTECTION AGENCY

Air pollutants, hazardous; national emission standards:

Portland cement manufacturing industry; comments due by 5-26-98; published 3-24-98

Air pollution; hazardous; national emission standards:

Aerospace manufacturing and rework facilities; comments due by 5-26-98; published 3-27-98

Air programs:

Fuels and fuel additives—

Diesel fuel sulfur requirement; Alaska exemption petition; comments due by 5-28-98; published 4-28-98

Air programs; approval and promulgation; State plans for designated facilitiesand pollutants:

Missouri; comments due by 5-26-98; published 4-24-98

Air quality implementation plans; approval and promulgation; various States:

Connecticut; comments due by 5-26-98; published 4-24-98

Georgia; comments due by 5-29-98; published 4-29-98

Wisconsin; comments due by 5-28-98; published 4-28-98

Air quality planning purposes; designation of areas:

Iowa; comments due by 5-26-98; published 4-23-98

Clean Air Act:

Clean fuel fleet program; State implementation plans; comments due by 5-26-98; published 4-23-98

Federal and State operating permits programs; draft rules and accompanying information availability; comments due by 5-26-98; published 4-28-98

CleanAir Act:

Clean fuel fleet program; State implementation plans; comments due by 5-26-98; published 4-23-98

Hazardous waste program authorizations:

New Mexico; comments due by 5-28-98; published 4-28-98

Pesticides; tolerances in food, animal feeds, and raw agricultural commodities:

Imidacloprid; comments due by 5-26-98; published 3-25-98

Superfund program:

National oil and hazardous substances contingency plan—

National priorities list update; comments due by 5-26-98; published 4-24-98

National priorities list update; comments due by 5-28-98; published 4-28-98

Toxic substances:

Testing requirements—

Diethanolamine; comments due by 5-29-98; published 3-30-98

Ethylene glycol; comments due by 5-29-98; published 3-30-98

Hydrogen fluoride; comments due by 5-26-98; published 3-27-98

Maleic anhydride; comments due by 5-26-98; published 3-27-98

Phthalic anhydride; comments due by 5-26-98; published 3-27-98

FEDERAL COMMUNICATIONS COMMISSION

Common carrier services:

Alternative incentive based regulation; policies and rules; reclassification of Comsat Corp. as nondominant carrier; comments due by 5-26-98; published 5-11-98

Universal service support; forward-looking economic cost mechanism; comments due by 5-26-98; published 5-22-98

FEDERAL LABOR RELATIONS AUTHORITY

Negotiability petitions processing; miscellaneous and general requirements; comments due by 5-29-98; published 4-20-98

FEDERAL RESERVE SYSTEM

Equal credit opportunity (Regulation B):

Technological revisions; comments due by 5-29-98; published 3-12-98

Home mortgage disclosure (Regulation C):

Preapprovals reporting, refinancing and home improvement loans reporting, purchased loans, temporary financing, and other issues; regulatory review; comments due by 5-29-98; published 3-12-98

FEDERAL TRADE COMMISSION

Industry guides:

Decorative wall paneling industry; comments due by 5-26-98; published 3-27-98

HEALTH AND HUMAN SERVICES DEPARTMENT

Food and Drug Administration

Color additives:

D&C Violet No. 2; comments due by 5-26-98; published 4-23-98

Food additives:

Polymers—

Poly(p-oxyphenylene p-oxyphenylene p-carboxyphenylene; comments due by 5-26-98; published 4-24-98

Food for human consumption:

Beverages—

Juice and juice products safety; preliminary regulatory impact analysis and initial regulatory flexibility analysis; comments due by 5-26-98; published 5-1-98

Food labeling—

Fruit and vegetable juice products; warning and notice statements; comments due by 5-26-98; published 4-24-98

Fruit and vegetable juice products; warning and notice statements; correction; comments due by 5-26-98; published 5-15-98

Sugars and sweets products category; candies reference amounts and serving sizes; comments due by 5-26-98; published 3-25-98

GRAS or prior sanctioned ingredients:

Egg white lysozyme; comments due by 5-27-98; published 3-13-98

Human drugs:

Ophthalmic products (OTC)—

Ophthalmic vasoconstrictor products; warning revision and addition; comments due by 5-26-98; published 2-23-98

HEALTH AND HUMAN SERVICES DEPARTMENT

Health Care Financing Administration

Medicare programs:

Medicare overpayment liability; ≥Without fault≥ and waiver of recovery from an individual; comments due by 5-26-98; published 3-25-98

HEALTH AND HUMAN SERVICES DEPARTMENT

Health Resources and Services Administration

National practitioner data bank:

Self-queries; charge; comments due by 5-26-98; published 3-24-98

HEALTH AND HUMAN SERVICES DEPARTMENT

Inspector General Office, Health and Human Services Department

Health care programs; fraud and abuse:

Health Insurance Portability and Accountability Act—

Civil monetary penalties; inflation adjustment; comments due by 5-26-98; published 3-25-98

INTERIOR DEPARTMENT

Fish and Wildlife Service

Endangered and threatened species:

Colorado butterfly plant; comments due by 5-26-98; published 3-24-98

Cowhead Lake tui chub; comments due by 5-29-98; published 3-30-98

La Graciosa thistle, etc. (four plants from South Central Coastal, CA); comments due by 5-29-98; published 3-30-98

Mariana fruit bat; comments due by 5-26-98; published 3-26-98

Purple amole; comments due by 5-29-98; published 3-30-98

Riparian brush rabbit, etc.; comments due by 5-28-98; published 4-13-98

Santa Cruz tarplant; comments due by 5-29-98; published 3-30-98

Migratory bird hunting:

Baiting and baited areas; comments due by 5-26-98; published 3-25-98

INTERIOR DEPARTMENT

Surface Mining Reclamation and Enforcement Office

Permanent program and abandoned mine land reclamation plan submissions:

Alabama; comments due by 5-29-98; published 4-29-98

Ohio; comments due by 5-29-98; published 4-29-98

LABOR DEPARTMENT

Mine Safety and Health Administration

Coal mine safety and health:

Underground coal mines—

Self-rescue devices; use and location requirements; comments due by 5-29-98; published 4-22-98

NUCLEAR REGULATORY COMMISSION

Production and utilization facilities; domestic licensing:

Nuclear power plants—

Criteria for Safety Systems for Nuclear Power Generating Stations; comments due by 5-26-98; published 4-23-98

Rulemaking petitions:

Prairie Island Coalition; comments due by 5-26-98; published 3-12-98

SECURITIES AND EXCHANGE COMMISSION

Securities:

Derivative securities; listing and trading of new products by self-regulatory organizations; comments due by 5-29-98; published 4-29-98

SMALL BUSINESS ADMINISTRATION

Business loan policy:

Disaster loans; criteria and eligibility; comments due by 5-26-98; published 4-23-98

TRANSPORTATION DEPARTMENT

Coast Guard

Boating safety:

Recreational boating—

Education; Federal requirements; comments due by 5-29-98; published 3-20-98

Personal flotation devices; Federal requirements; comments due by 5-29-98; published 3-20-98

Regattas and marine parades:

Around Alone Sailboat Race; comments due by 5-29-98; published 3-30-98

TRANSPORTATION DEPARTMENT

Americans with Disabilities Act; implementation:

Accessibility guidelines for transportation vehicles—

Over-the-road buses; comments due by 5-26-98; published 3-25-98

Accessibility guidelines—

Transportation for individuals with disabilities; over-the-road buses; comments due by 5-26-98; published 3-25-98

TRANSPORTATION DEPARTMENT

Federal Aviation Administration

Airworthiness directives:

de Havilland; comments due by 5-27-98; published 4-27-98

Aerospatiale; comments due by 5-26-98; published 4-23-98

Airbus; comments due by 5-27-98; published 4-27-98

Bell; comments due by 5-26-98; published 3-24-98

Boeing; comments due by 5-26-98; published 3-27-98

Empresa Brasileira de Aeronautica S.A.; comments due by 5-27-98; published 4-27-98

Fokker; comments due by 5-26-98; published 4-23-98

Gulfstream; comments due by 5-27-98; published 4-27-98

Mitsubishi Heavy Industries, Ltd.; comments due by 5-26-98; published 4-9-98

Pratt & Whitney; comments due by 5-26-98; published 3-24-98

Airworthiness standards:

Special conditions—

Turbomeca S.A. model Arriel 2S1 turboshaft engine; comments due by 5-29-98; published 4-29-98

Class E airspace; comments due by 5-26-98; published 4-10-98

TREASURY DEPARTMENT

Customs Service

Trademarks, trade names, and copyrights:

Gray market imports and other trademarked goods; comments due by 5-26-98; published 3-26-98

TREASURY DEPARTMENT

Fiscal Service

Federal claims collection:

Administrative offset; comments due by 5-28-98; published 4-28-98

TREASURY DEPARTMENT

Thrift Supervision Office

Savings associations:

Prior notice of appointment or employment of directors and senior executive officers; requirements; comments due by 5-29-98; published 3-27-98