7–20–98
Vol. 63 No. 138
Pages 38737–39014

federal register

Monday
July 20, 1998

Now Available Online via

GPO Access

Free online access to the official editions of the *Federal Register, the Code of Federal Regulations* and other Federal Register publications is available on *GPO Access*, a service of the U.S. Government Printing Office at:

http://www.access.gpo.gov/nara/index.html

For additional information on ***GPO Access*** products, services and access methods, see page II or contact the *GPO Access* User Support Team via:

★ Phone: toll-free: 1-888-293-6498

★ Email: gpoaccess@gpo.gov

Attention: Federal Agencies

Plain Language Tools Are Now Available

The Office of the Federal Register offers Plain Language Tools on its Website to help you comply with the President's Memorandum of June 1, 1998—Plain Language in Government Writing (63 FR 31883, June 10, 1998). Our address is: http://www.nara.gov/fedreg

For more in-depth guidance on the elements of plain language, read ''Writing User-Friendly Documents'' on the National Partnership for Reinventing Government (NPR) Website at: http://www.plainlanguage.gov

The **FEDERAL REGISTER** is published daily, Monday through Friday, except official holidays, by the Office of the Federal Register, National Archives and Records Administration, Washington, DC 20408, under the Federal Register Act (44 U.S.C. Ch. 15) and the regulations of the Administrative Committee of the Federal Register (1 CFR Ch. I). The Superintendent of Documents, U.S. Government Printing Office, Washington, DC 20402 is the exclusive distributor of the official edition.

The **Federal Register** provides a uniform system for making available to the public regulations and legal notices issued by Federal agencies. These include Presidential proclamations and Executive Orders, Federal agency documents having general applicability and legal effect, documents required to be published by act of Congress, and other Federal agency documents of public interest.

Documents are on file for public inspection in the Office of the Federal Register the day before they are published, unless the issuing agency requests earlier filing. For a list of documents currently on file for public inspection, see http://www.nara.gov/fedreg.

The seal of the National Archives and Records Administration authenticates the Federal Register as the official serial publication established under the Federal Register Act. Under 44 U.S.C. 1507, the contents of the **Federal Register** shall be judicially noticed.

The **Federal Register** is published in paper and on 24x microfiche. It is also available online at no charge as one of the databases on GPO Access, a service of the U.S. Government Printing Office.

The online edition of the **Federal Register** is issued under the authority of the Administrative Committee of the Federal Register as the official legal equivalent of the paper and microfiche editions (44 U.S.C. 4101 and 1 CFR 5.10). It is updated by 6 a.m. each day the **Federal Register** is published and it includes both text and graphics from Volume 59, Number 1 (January 2, 1994) forward.

GPO Access users can choose to retrieve online **Federal Register** documents as TEXT (ASCII text, graphics omitted), PDF (Adobe Portable Document Format, including full text and all graphics), or SUMMARY (abbreviated text) files. Users should carefully check retrieved material to ensure that documents were properly downloaded.

On the World Wide Web, connect to the **Federal Register** at http://www.access.gpo.gov/nara. Those without World Wide Web access can also connect with a local WAIS client, by Telnet to swais.access.gpo.gov, or by dialing (202) 512-1661 with a computer and modem. When using Telnet or modem, type swais, then log in as guest with no password.

For more information about GPO Access, contact the GPO Access User Support Team by E-mail at gpoaccess@gpo.gov; by fax at (202) 512–1262; or call (202) 512–1530 or 1–888–293–6498 (toll free) between 7 a.m. and 5 p.m. Eastern time, Monday–Friday, except Federal holidays.

The annual subscription price for the **Federal Register** paper edition is $555, or $607 for a combined **Federal Register,** Federal Register Index and List of CFR Sections Affected (LSA) subscription; the microfiche edition of the **Federal Register** including the Federal Register Index and LSA is $220. Six month subscriptions are available for one-half the annual rate. The charge for individual copies in paper form is $8.00 for each issue, or $8.00 for each group of pages as actually bound; or $1.50 for each issue in microfiche form. All prices include regular domestic postage and handling. International customers please add 25% for foreign handling. Remit check or money order, made payable to the Superintendent of Documents, or charge to your GPO Deposit Account, VISA, MasterCard or Discover. Mail to: New Orders, Superintendent of Documents, P.O. Box 371954, Pittsburgh, PA 15250–7954.

There are no restrictions on the republication of material appearing in the **Federal Register.**

How To Cite This Publication: Use the volume number and the page number. Example: 63 FR 12345.

SUBSCRIPTIONS AND COPIES

PUBLIC	
Subscriptions:	
Paper or fiche	**202–512–1800**
Assistance with public subscriptions	**512–1806**
General online information	**202–512–1530; 1–888–293–6498**
Single copies/back copies:	
Paper or fiche	**512–1800**
Assistance with public single copies	**512–1803**
FEDERAL AGENCIES	
Subscriptions:	
Paper or fiche	**523–5243**
Assistance with Federal agency subscriptions	**523–5243**

Printed on recycled paper containing 100% post consumer waste

Contents

Federal Register

Vol. 63, No. 138

Monday, July 20, 1998

Administration on Aging
See Aging Administration

Agency for International Development
RULES
Commodities and services financed by USAID; source, origin and nationality; miscellaneous amendments, 38751–38752

Aging Administration
NOTICES
Grants and cooperative agreements; availability, etc.:
National Resource and Education Center on Women and Retirement, 38837

Agriculture Department
See Animal and Plant Health Inspection Service
See Federal Crop Insurance Corporation
See Food and Nutrition Service
See Forest Service

Animal and Plant Health Inspection Service
NOTICES
Environmental statements; availability, etc.:
Nonregulated status determinations—
Monsanto Co.; genetically engineered potato lines, 38805–38806

Centers for Disease Control and Prevention
NOTICES
Meetings:
National Immunization Program; immunization registry networks technical vision, 38837

Coast Guard
RULES
Ports and waterways safety:
San Francisco Bay, CA; safety and security zone, 38753–38755
Regattas and marine parades:
Cross River Swim Paducah Summerfest, OH, 38752–38753

Commerce Department
See National Oceanic and Atmospheric Administration
See Patent and Trademark Office
NOTICES
Agency information collection activities:
Submission for OMB review; comment request, 38807–38808

Committee for the Implementation of Textile Agreements
NOTICES
Cotton, wool, and man-made textiles:
Oman, 38810
Sri Lanka, 38810–38811

Corporation for National and Community Service
NOTICES
Grants and cooperative agreements; availability, etc.:
AmeriCorps Promise Fellowships, 38811–38814
National service programs; proposed criteria, 38814–38815

Defense Department
See Uniformed Services University of the Health Sciences
NOTICES
Defense items produced in United Kingdom; waiver of procurement limitations, 38815–38816

Drug Enforcement Administration
NOTICES
Agency information collection activities:
Proposed collection; comment request, 38847–38853

Education Department
RULES
Postsecondary education:
William D. Ford Federal direct student loan program, 39009–39013
NOTICES
Agency information collection activities:
Submission for OMB review; comment request, 38816–38817

Energy Department
See Energy Efficiency and Renewable Energy Office
See Federal Energy Regulatory Commission
NOTICES
Meetings:
Environmental Management Site-Specific Advisory Board—
Nevada Test Site, 38817–38818
Oak Ridge Reservation, 38818
Rocky Flats, 38818–38819

Energy Efficiency and Renewable Energy Office
RULES
Consumer products; energy conservation program:
Water heating standards; design options
Correction, 38737–38741

Environmental Protection Agency
RULES
Air quality implementation plans; approval and promulgation; various States:
Missouri, 38755–38756
Water programs:
Pollutants analysis test procedures; guidelines
CFR correction, 38881
PROPOSED RULES
Air pollution control; new motor vehicles and engines:
Light-duty vehicles and trucks—
Heavy-duty engines for original equipment manufacturers and for aftermarket conversion manufacturers, 38767–38774
NOTICES
Agency information collection activities:
Submission for OMB review; comment request, 38827–38828
Meetings:
National Drinking Water Advisory Council, 38828

Federal Aviation Administration
RULES
Airworthiness directives:
Bell, 38742–38743

NOTICES
Passenger facility charges; applications, etc.:
Blue Grass Airport, KY, 38871
Kenton County Airport, KY, et al., 38871–38874

Federal Communications Commission
RULES
Practice and procedure:
Regulatory fees (1998 FY); assessment and collection
Correction, 38881
Radio stations; table of assignments:
Florida, 38757
Florida et al., 38756–38757
PROPOSED RULES
Common carrier services:
Access charges—
Incumbent local exchange carriers subject to rate-of-return regulation; access charge reform, 38774–38783
Radio stations; table of assignments:
Alabama et al., 38787–38788
Guam, 38785–38786
Kentucky, 38786
Michigan, 38785
Montana, 38786
Nebraska, 38784
Nevada, 38784
Wyoming, 38787, 38784–38785

Federal Crop Insurance Corporation
PROPOSED RULES
Crop insurance regulations:
Fresh market tomatoes, 38761–38762

Federal Emergency Management Agency
NOTICES
Disaster and emergency areas:
Florida, 38828–38829
Iowa, 38829–38830
Maine, 38830
Massachusetts, 38830
Micronesia, 38830–38831
New Hampshire, 38831
New Mexico, 38831–38832
New York, 38832
Ohio, 38832–38833
Republic of Marshall Islands, 38833
South Dakota, 38833
Vermont, 38833–38834
West Virginia, 38834

Federal Energy Regulatory Commission
RULES
Electric utilities (Federal Power Act):
Open access same-time information system and standards of conduct, 38883–39007
NOTICES
Meetings:
Equitrans, L.P.; settlement conference, 38826
Restricted service lists:
New England Power Co., 38827
Applications, hearings, determinations, etc.:
Cameron Gas & Electric Co., 38819
Carnegie Interstate Pipeline Co., 38819
CNG Transmission Corp., 38819–38820
Conoco, Inc., 38820
Eastern Shore Natural Gas Co., 38821
East Tennessee Natural Gas Co., 38820–38821
Granite State Gas Transmission, Inc., 38821
Gulf States Transmission Corp., 38821–38822
Midwestern Gas Transmission Co., 38822
New England Power Pool, 38822
NorAm Gas Transmission Co., 38822–38823
Northern Border Pipeline Co., 38823
Northern Natural Gas Co., 38823–38824
Northwest Pipeline Corp., 38824
Overthrust Pipeline Co., 38824–38825
PJM Interconnection, L.L.C., 38825
Public Service Electric & Gas Co., 38825
South Georgia Natural Gas Co., 38825–38826
Tennessee Gas Pipeline Co., 38826
Tuscarora Gas Transmission Co., 38826

Federal Highway Administration
PROPOSED RULES
Motor carrier safety standards:
Commercial motor vehicles—
Out-of-service criteria, 38791–38795
Safety fitness procedures—
Rating methodology, 38788–38791

Federal Labor Relations Authority
NOTICES
Senior Executive Service:
Performance Review Board; membership, 38834

Federal Maritime Commission
NOTICES
Complaints filed:
Panalpina, Inc., 38835

Federal Reserve System
NOTICES
Banks and bank holding companies:
Change in bank control, 38835
Formations, acquisitions, and mergers, 38835–38836
Permissible nonbanking activities, 38836

Federal Trade Commission
RULES
Appliances, consumer; energy consumption and water use information in labeling and advertising:
Lamp product distribution without individual packaging or labeling; disclosure of labeling on bulk shipping cartons, 38743–38746

Fish and Wildlife Service
PROPOSED RULES
Endangered and threatened species:
Parish's alkali grass, 38803–38804
NOTICES
Meetings:
Aquatic Nuisance Species Task Force, 38842

Food and Drug Administration
RULES
Animal drugs, feeds, and related products:
Bacitracin methylene disalicylate, 38750–38751
Flunixin meglumine, 38749–38750
Food additives:
Adjuvant, production aids, and sanitizers—
Aluminum borate, 38747–38749
Food for human consumption:
Chlorine dioxide, 38746–38747

PROPOSED RULES
Human drugs:
Cold, cough, allergy, bronchodilator, and antiasthmatic products (OTC)—
Labeling warnings and directions for topical/inhalant antitussive drug products containing camphor and/or menthol; final monograph, 38762–38765
NOTICES
Meetings:
Medical Devices Advisory Committee, 38838

Food and Nutrition Service
NOTICES
Agency information collection activities:
Proposed collection; comment request, 38806–38807

Forest Service
NOTICES
Agency information collection activities:
Proposed collection; comment request, 38807

Health and Human Services Department
See Aging Administration
See Centers for Disease Control and Prevention
See Food and Drug Administration
See Health Care Financing Administration
See National Institutes of Health
NOTICES
Organization, functions, and authority delegations:
Technical amendments, 38836–38837

Health Care Financing Administration
NOTICES
Agency information collection activities:
Proposed collection; comment request, 38838–38839
Submission for OMB review; comment request, 38839–38840

Interior Department
See Fish and Wildlife Service
See Land Management Bureau
See Minerals Management Service
See National Park Service
See Surface Mining Reclamation and Enforcement Office

International Development Cooperation Agency
See Agency for International Development
See Overseas Private Investment Corporation

Justice Department
See Drug Enforcement Administration
PROPOSED RULES
Criminal intelligence sharing systems; policy clarification, 38765–38766

Labor Department
See Pension and Welfare Benefits Administration

Land Management Bureau
NOTICES
Resource Management Plans, etc.:
Yuma District Resource Management Plan; wild horse and burro herds, 38842

Minerals Management Service
NOTICES
Agency information collection activities:
Submission for OMB review; comment request, 38843

National Credit Union Administration
NOTICES
Agency information collection activities:
Submission for OMB review; comment request, 38860–38861

National Highway Traffic Safety Administration
PROPOSED RULES
Motor vehicle safety standards:
Lamps, reflective devices, and associated equipment—
Stop lamp illumination; maximum time required to reach 90 percent illumination, 38797–38799
Motorized bicycles—
Whizzer Motorbike Co.; petition denied, 38802–38803
Occupant crash protection—
Air bag on-off switch location in new vehicles, 38795–38797
Steering control rearward displacement; rulemaking terminated, 38799–38802
NOTICES
Motor vehicle defect proceedings; petitions, etc.:
Lucas, Edward J., 38874–38875
Motor vehicle safety standards:
Nonconforming vehicles—
Importation eligibility; determinations, 38875–38878

National Institutes of Health
NOTICES
Inventions, Government-owned; availability for licensing, 38840–38842

National Oceanic and Atmospheric Administration
RULES
Fishery conservation and management:
Alaska; fisheries of Exclusive Economic Zone—
Gulf of Alaska groundfish, 38760
Northern rockfish, 38759
Pacific Ocean perch, 38758–38759
NOTICES
Meetings:
Atlantic Highly Migratory Species and Billfish Advisory Panels, 38808

National Park Service
NOTICES
Concession contract negotiations:
Grand Canyon National Park, CO; overnight accommodations, etc.
Correction, 38843
Director's orders; availability, etc.:
Wilderness preservation and management; Reference Manual update, 38843–38844
Environmental statements; notice of intent:
Carlsbad Caverns National Park, NM, 38844–38845
Meetings:
Delta Region Preservation Commission, 38845
National Register of Historic Places:
Pending nominations, 38845–38846

Nuclear Regulatory Commission
NOTICES
Agency information collection activities:
Submission for OMB review; comment request, 38861–38862
Reports and guidance documents; availability, etc.:
Final status decommissioning surveys; design and analysis; statistical methodology, 38864–38865
Potassium iodide (KI) assessment; protective action during severe reactor accidents, 38865

Applications, hearings, determinations, etc.:
Florida Power & Light Co., 38862–38863
Indiana Michigan Power Co., 38863–38864
Tennessee Valley Authority, 38864

Overseas Private Investment Corporation
NOTICES
Agency information collection activities:
Submission for OMB review; comment request, 38847

Patent and Trademark Office
NOTICES
Agency information collection activities:
Proposed collection; comment request, 38810

Pension and Welfare Benefits Administration
NOTICES
Employee benefit plans; prohibited transaction exemptions:
Collection Bureau Services, 38853–38854
Pacific Income Advisers, Inc., 38854–38860

Public Health Service
See Centers for Disease Control and Prevention
See Food and Drug Administration
See National Institutes of Health

Research and Special Programs Administration
RULES
Pipeline safety:
Voluntary specifications and standards, etc.; periodic updates
Correction, 38758
Effective date confirmation and removal of amendment, 38757–38758

Securities and Exchange Commission
NOTICES
Agency information collection activities:
Submission for OMB review; comment request, 38865
Meetings; Sunshine Act, 38865–38866
Self-regulatory organizations; proposed rule changes:
Chicago Stock Exchange, Inc., 38866–38868
Municipal Securities Rulemaking Board, 38868–38869

Small Business Administration
RULES
Small business size standards:
Nonmanufacturer rule; waivers—
Towers, telegraph apparatus, turbines, cellular handsets and telephones, automobile motor vehicles, motor trucks, and radiotelephones, 38742
NOTICES
Meetings:
Unguaranteed portions of loans; multi-lender securitizations, 38869–38870
Meetings; district and regional advisory councils:
Honolulu, 38870
Wisconsin, 38870

Surface Mining Reclamation and Enforcement Office
RULES
Permanent program and abandoned mine land reclamation plan submissions:
Louisiana; correction, 38881

Surface Transportation Board
NOTICES
Rail carriers:
Cost of capital; railroad industry's 1997 decision, 38878
Railroad services abandonment:
Roaring Fork Railroad Holding Authority, 38878–38879
Union Pacific Railroad Co., 38879–38880

Textile Agreements Implementation Committee
See Committee for the Implementation of Textile Agreements

Transportation Department
See Coast Guard
See Federal Aviation Administration
See Federal Highway Administration
See National Highway Traffic Safety Administration
See Research and Special Programs Administration
See Surface Transportation Board
NOTICES
Air carriers:
Notification requirements; ownership and operations; proposed substantial change or reorganization due to bankruptcy, 38870
Aviation proceedings:
Agreements filed; weekly receipts, 38870
Certificates of public convenience and necessity and foreign air carrier permits; weekly applications, 38870–38871

Uniformed Services University of the Health Sciences
NOTICES
Meetings; Sunshine Act, 38816

United States Enrichment Corporation
NOTICES
Meetings; Sunshine Act, 38880

Separate Parts In This Issue

Part II
Department of Energy, Federal Energy Regulatory Commission, 38883–39007

Part III
Department of Education, 39009–39013

Reader Aids
Consult the Reader Aids section at the end of this issue for phone numbers, online resources, finding aids, reminders, and notice of recently enacted public laws.

CFR PARTS AFFECTED IN THIS ISSUE

A cumulative list of the parts affected this month can be found in the Reader Aids section at the end of this issue.

7 CFR
Proposed Rules:
457.....38761

10 CFR
430.....38737

13 CFR
121.....38742

14 CFR
39.....

16 CFR
305.....38743

18 CFR
37.....38883

21 CFR
173.....38746
178.....38747
522.....38749
556.....38749
558.....38750
Proposed Rules:
341.....38762

22 CFR
228.....38751

28 CFR
Proposed Rules:
23.....38765

30 CFR
918.....38881

33 CFR
100.....38752
165.....38753

34 CFR
685.....39009

40 CFR
52.....38755
136.....38756
Proposed Rules:
86.....38767

47 CFR
1.....38881
73 (2 documents) 38756
38757
Proposed Rules:
69.....38774
73 (9 documents) 38784,
38785, 38786, 38787

49 CFR
190 (2 documents) 38757,
38757
191.....38757
192 (2 documents) 38757,
38757
193.....38757
195.....38757
199.....38757
Proposed Rules:
385.....38788
395.....38791
396.....38791
571 (4 documents) 38795,
38797, 38799, 38802

50 CFR
679 (3 documents) 38758,
38759, 38760
Proposed Rules:
17.....38803

Rules and Regulations

Federal Register
Vol. 63, No. 138
Monday, July 20, 1998

This section of the FEDERAL REGISTER contains regulatory documents having general applicability and legal effect, most of which are keyed to and codified in the Code of Federal Regulations, which is published under 50 titles pursuant to 44 U.S.C. 1510.

The Code of Federal Regulations is sold by the Superintendent of Documents. Prices of new books are listed in the first FEDERAL REGISTER issue of each week.

DEPARTMENT OF ENERGY

Office of Energy Efficiency and Renewable Energy

10 CFR Part 430

[Docket No. EE–RM–94–230]

RIN 1904–AA52

Energy Conservation Program for Consumer Products: Test Procedure for Water Heaters; Correction

AGENCY: Office of Energy Efficiency and Renewable Energy, DOE.

ACTION: Final rule; correction.

SUMMARY: This correction notice amends the Final Rule on test procedures for water heaters. The Department of Energy (the Department or DOE) is amending Section 4.3 (Water Inlet and Outlet Configuration) to include Figures 1–7 as referenced in the Final Rule published May 11, 1998. (63 FR 25996) (FR Doc. 98–12296). Soon after publication of the Final Rule, the Gas Appliance Manufacturer's Association noted that these figures were missing.

EFFECTIVE DATE: This rule is effective June 10, 1998.

FOR FURTHER INFORMATION CONTACT: Mr. Terrence L. Logee, U.S. Department of Energy, Office of Energy Efficiency and Renewable Energy, Mail Station EE–43, Forrestal Building, 1000 Independence Avenue, SW, Washington, DC 20585–0121, (202) 586–1689, or Eugene Margolis, Esq., U.S. Department of Energy, Office of General Counsel, Mail Station GC–72, Forrestal Building, 1000 Independence Avenue, SW, Washington, DC 20585–0103, (202) 586–9507.

Correction

In Rule FR Doc. 98–12296, beginning on page 25996, in the issue of Monday, May 11, 1998, the following correction should be made:

PART 430—[CORRECTED]

Figures 1–7 should be added immediately after Appendix E to Subpart B of Part 430, Section 4.3, Water Inlet and Outlet Configuration, on page 26010, third column.

Appendix E to Subpart B of Part 430—Uniform Test Method for Measuring the Energy Consumption of Water Heaters

* * * * *

4.3 * * *

BILLING CODE 6450–01–P

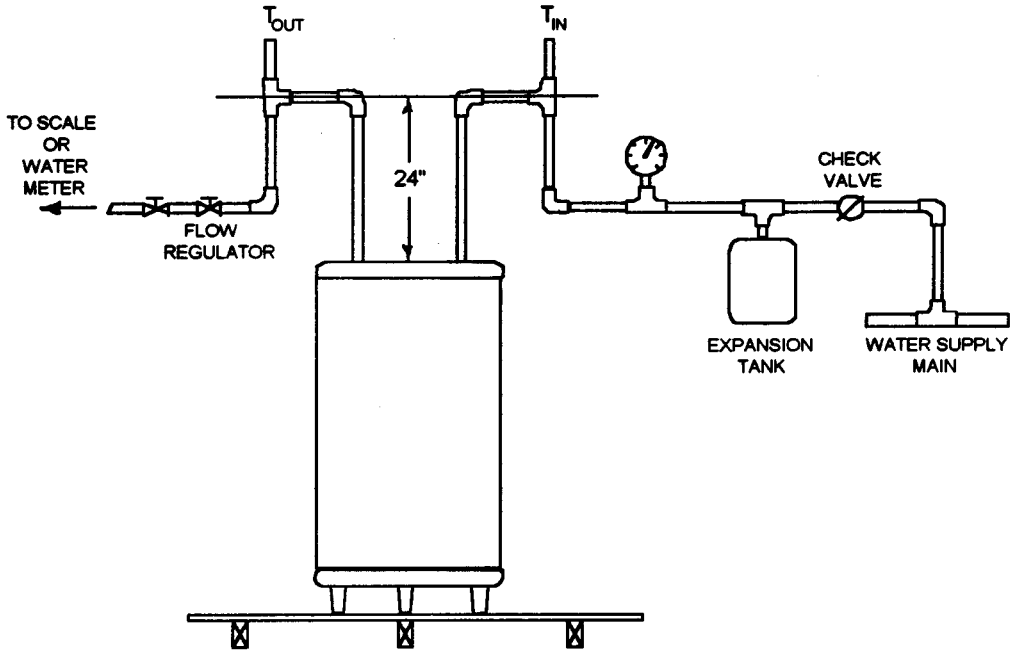

Figure 1.

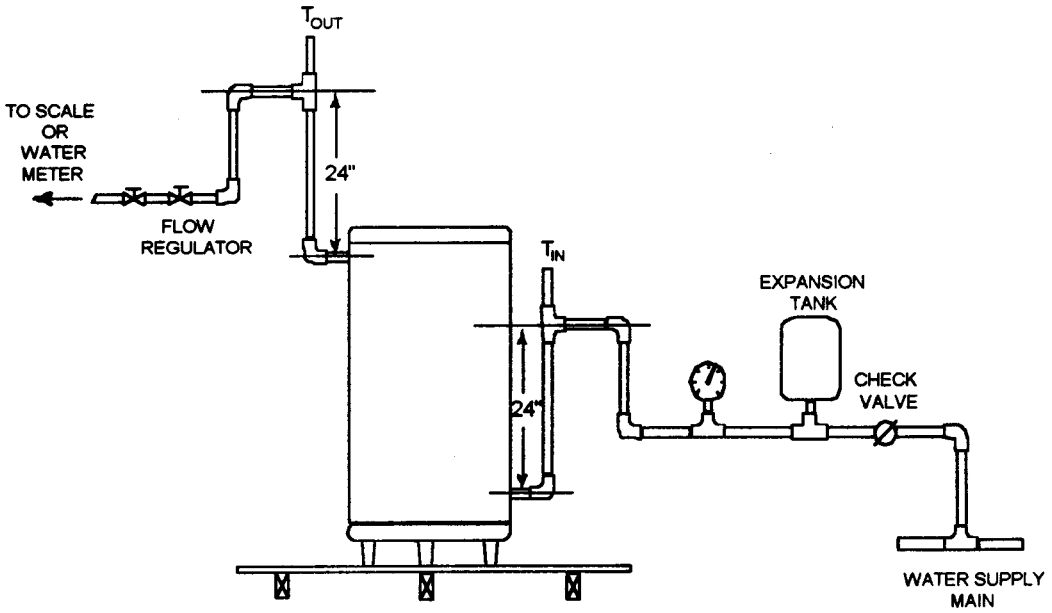

Figure 2.

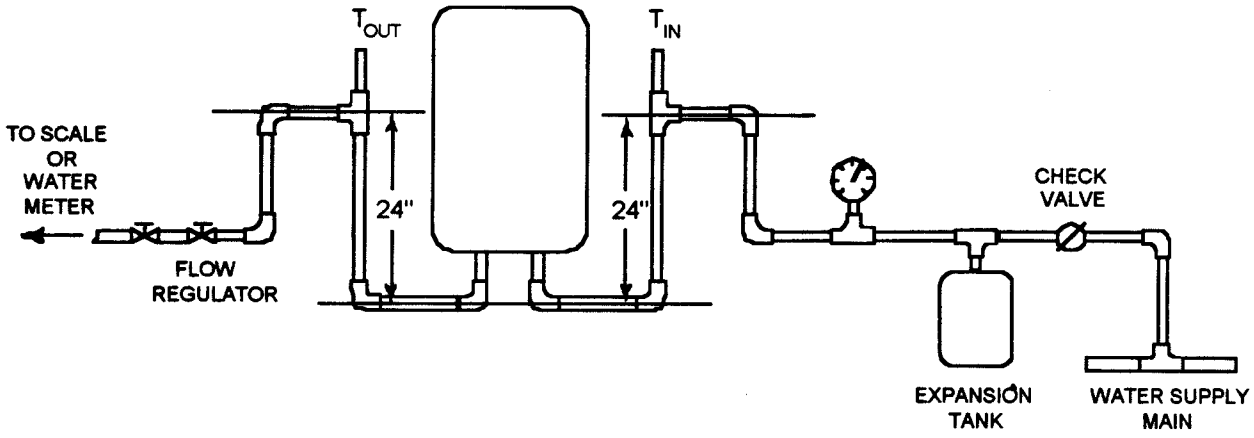

Figure 3.

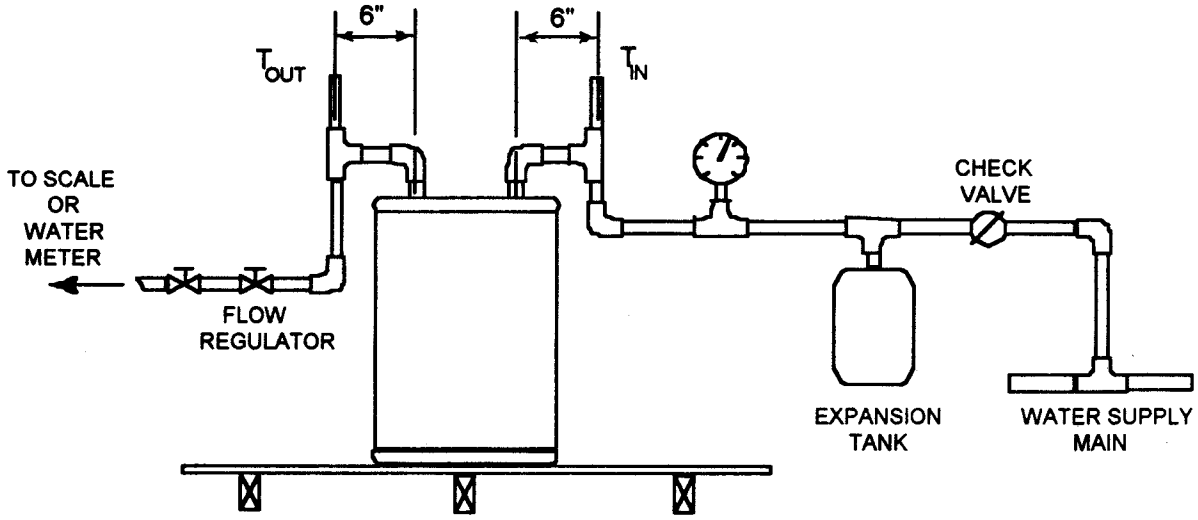

Figure 4.

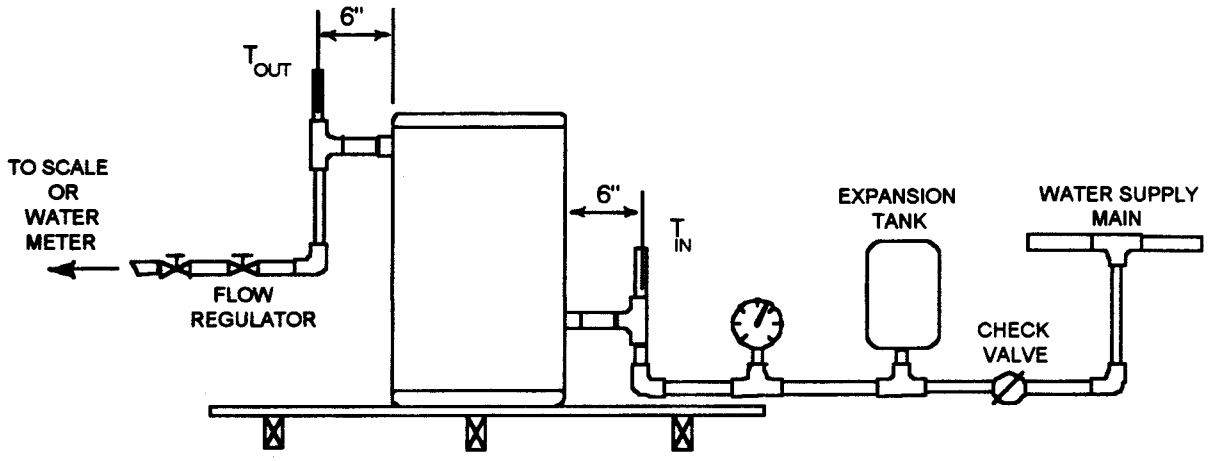

Figure 5.

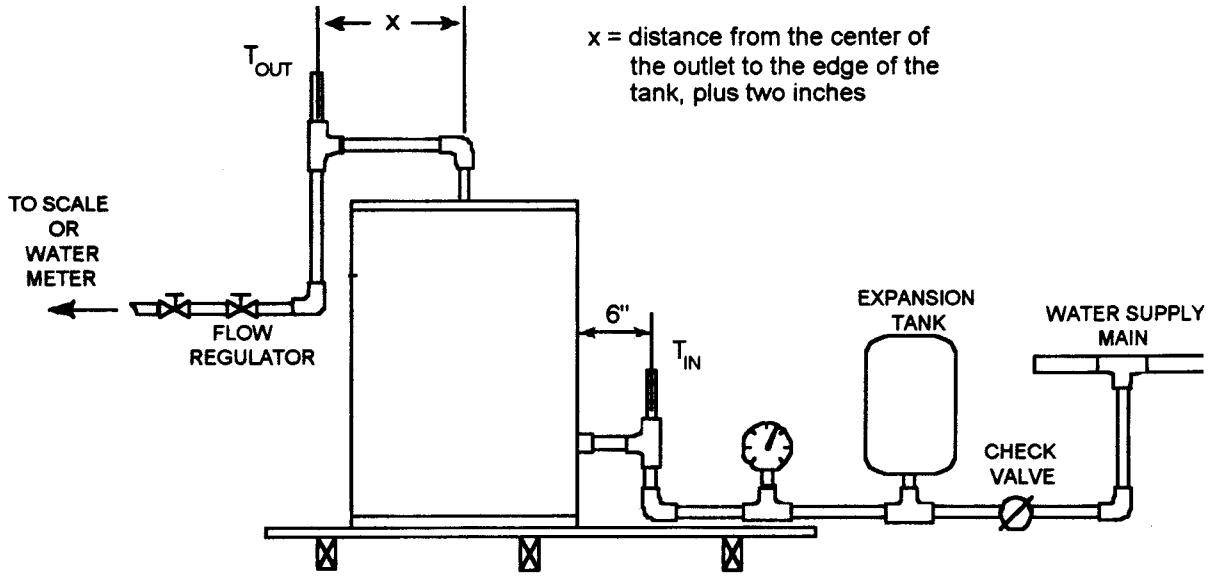

Figure 6.

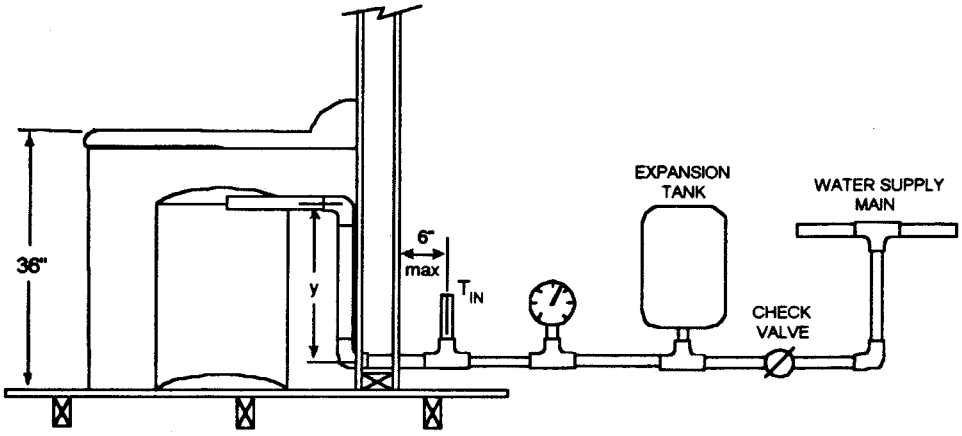

(a)

y = 24 inches or the maximum distance permitted given the water heaters construction, whichever is less

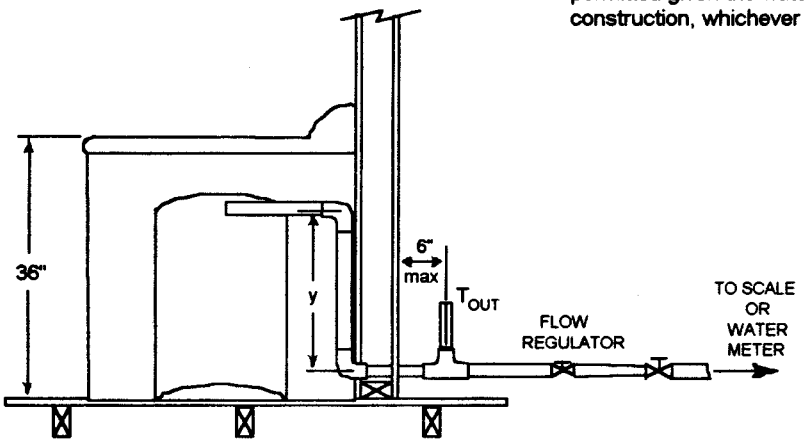

(b)

Figure 7.

* * * * *

Issued in Washington, DC, July 13, 1998.

Dan Reicher,

Assistant Secretary, Energy Efficiency and Renewable Energy.

[FR Doc. 98–19290 Filed 7–17–98; 8:45 am]

BILLING CODE 6450–01–C

SMALL BUSINESS ADMINISTRATION

13 CFR Part 121

Small Business Size Standards; Waiver of the Nonmanufacturer Rule

AGENCY: Small Business Administration.

ACTION: Notice to waive the Nonmanufacturer Rule for Towers, Telegraph Apparatus, Turbines, Cellular Handsets and Telephones, Automobile Motor Vehicles, Motor Trucks, and Radiotelephones.

SUMMARY: This notice advises the public that the Small Business Administration (SBA) is establishing a waiver of the Nonmanufacturer Rule for Towers, Telegraph Apparatus, Turbines, Cellular Handsets and Telephones, Automobile Motor Vehicles, Motor Trucks, and Radiotelephones. The basis for a waiver is that no small business manufacturers are available to participate in the Federal market for these products. The effect of a waiver will allow otherwise qualified nonmanufacturers to supply the products of any domestic manufacturer on a Federal contract set-aside for small businesses or awarded through the SBA 8(a) Program.

EFFECTIVE DATE: July 20, 1998.

ADDRESSES: David Wm. Loines, Procurement Analyst, U.S. Small Business Administration, 409 3rd Street S.W., Washington, DC 20416, Tel: (202) 205–6475.

FOR FURTHER INFORMATION CONTACT: David Wm. Loines, (202) 205–6475.

SUPPLEMENTARY INFORMATION: Public Law 100–656, enacted on November 15, 1988, incorporated into the Small Business Act the previously existing regulation that recipients of Federal contracts set-aside for small businesses or the SBA 8(a) Program procurement must provide the product of a small business manufacturer or processor if the recipient is other than the actual manufacturer or processor. This requirement is commonly referred to as the Nonmanufacturer Rule. The SBA regulations imposing this requirement are found at 13 CFR 121.406(b). Section 303(h) of the law provides for waiver of this requirement by SBA for any ''class of products'' for which there are no small business manufacturers or processors in the Federal market. To be considered available to participate in the Federal market on these classes of products, a small business manufacturer must have submitted a proposal for a contract solicitation or received a contract from the Federal Government within the last 24 months. The SBA defines ''class of products'' based on two coding systems. The first is the Office of Management and Budget Standard Industrial Classification Manual. The second is the Product and Service Code (PSC) established by the Federal Procurement Data System.

The SBA was asked to issue a waiver for Towers, Telegraph Apparatus, Turbines, Cellular Handsets and Telephones, Automobile Motor Vehicles, Motor Trucks, and Radiotelephones because of an apparent lack of any small business manufacturers or processors for them within the Federal market. The SBA searched its Procurement Marketing and Access Network (PRO-net) for small business participants and found none. We then published a notice in the **Federal Register** on April 23, 1998 (vol. 63, no. 78, p. 20139), of our intent to grant a waiver for these classes of products unless new information was found. The proposed waiver covered Towers, Telegraph Apparatus, Turbines, Cellular Handsets and Telephones, Automobile Motor Vehicles, Motor Trucks, and Radiotelephones. The notice described the legal provisions for a waiver, how SBA defines the market, and asked for small business participants of these classes of products.

After the 15-day comment period, no small businesses were identified for Towers, Telegraph Apparatus, Turbines, Cellular Handsets and Telephones, Automobile Motor Vehicles, Motor Trucks, and Radiotelephones. This waiver is being granted pursuant to statutory authority under section 303(h) of Public Law 100–656 for Towers, Telegraph Apparatus, Turbines, Cellular Handsets and Telephones, Automobile Motor Vehicles, Motor Trucks, and Radiotelephones. The waiver will last indefinitely but is subject to both an annual review and a review upon receipt of information that the conditions required for a waiver no longer exist. If such information is found, the waiver may be terminated.

Judith A. Roussel,

Associate Administrator for Government Contracting.

[FR Doc. 98–19236 Filed 7–17–98; 8:45 am]

BILLING CODE 8025–01–U

DEPARTMENT OF TRANSPORTATION

Federal Aviation Administration

14 CFR Part 39

[Docket No. 97–SW–58–AD; Amendment 39–10421; AD 98–07–03]

RIN 2120–AA64

Airworthiness Directives; Bell Helicopter Textron, Inc. Model 412 Helicopters and Agusta S.p.A Model AB 412 Helicopters; Correction

AGENCY: Federal Aviation Administration, DOT.

ACTION: Final rule; correction.

SUMMARY: This document corrects a technical bulletin date in airworthiness directive (AD) 98–07–03 that was incorrectly published in the **Federal Register** on March 24, 1998 (63 FR 14026). This AD is applicable to Bell Helicopter Textron, Inc. Model 412 helicopters and Agusta S.p.A Model AB 412 helicopters and requires a temporary reduction of the never-exceed velocity (Vne) limitation until an inspection of the tail rotor yoke (yoke) assembly for fatigue damage and installation of a redesigned yoke flapping stop are accomplished. Recurring periodic and special inspections to detect occurrences of yoke overload are also required.

DATES: Effective April 8, 1998.

The incorporation by reference of certain publications listed in the regulations was previously approved by the Director of the Federal Register as of April 8, 1998 (63 FR 14026, March 24, 1998).

FOR FURTHER INFORMATION CONTACT: Mr. Shep Blackman, Aerospace Engineer, FAA, Rotorcraft Directorate, Rotorcraft Standards Staff, 2601 Meacham Blvd., Fort Worth, Texas 76137, telephone (817) 222–5296, fax (817) 222–5961.

SUPPLEMENTARY INFORMATION: Airworthiness Directive (AD) 98–07–03, amendment 39–10421, applicable to Bell Helicopter, Textron, Inc. Model 412 Helicopters and Agusta S.p.A Model AB 412 helicopters was published in the **Federal Register** on March 24, 1998 (63 FR 14026). That AD requires a temporary reduction of the Vne limitation until an inspection of the yoke assembly for fatigue damage and installation of a redesigned yoke flapping stop are accomplished. Recurring periodic and special inspections to detect occurrences of yoke overload are also required.

As published, the Agusta Technical Bulletin date given in the Supplementary Information and in paragraphs (c)(1) and (g) is incorrect.

Since no other part of the regulatory information has been changed, the final rule is not being republished.

The effective date of the AD remains April 8, 1998.

In rule FR Doc. 98–7414 published on March 24, 1998 (63 FR 14026), make the following corrections:

§ 39.13 [Corrected]

(1) On page 14027, in the first column under Supplementary Information, change ''December 2, 1996'' to ''April 17, 1997.''

(2) On page 14028, in paragraphs (c)(1), (d), and (g), change ''December 2, 1996'' to ''April 17, 1997.''

Issued in Fort Worth, Texas, on July 10, 1998.

Larry M. Kelly,

Acting Manager, Rotorcraft Directorate, Aircraft Certification Service.

[FR Doc. 98–19178 Filed 7–17–98; 8:45 am]

BILLING CODE 4910–13–P

FEDERAL TRADE COMMISSION

16 CFR Part 305

Rule Concerning Disclosures Regarding Energy Consumption and Water Use of Certain Home Appliances and Other Products Required Under the Energy Policy and Conservation Act (''Appliance Labeling Rule'')

AGENCY: Federal Trade Commission.

ACTION: Final rule.

SUMMARY: The Federal Trade Commission (''Commission'') amends the package labeling requirements for lamp products under the Commission's Appliance Labeling Rule (''Rule'') in response to a petition from Osram Sylvania, Ltd. (''Petitioner''). The Petitioner requests that it be allowed to distribute to consumers, through retailers, lamp products without individual packaging or labeling, where the bulk shipping cartons include the disclosures currently required by the Rule and where retailers display the lamp products for sale to consumers in the bulk shipping cartons. The interpretative amendment the Commission adopts clarifies that manufacturers and private labelers of lamp products that are not packaged for individual retail sale may meet the labeling disclosure requirements of the Rule by making the disclosures on labeling on the bulk shipping carton, where the bulk shipping carton is used to display the lamps for retail sale.

EFFECTIVE DATE: July 20, 1998.

FOR FURTHER INFORMATION CONTACT: Kent C. Howerton, Attorney, Federal Trade Commission, Bureau of Consumer Protection, Division of Enforcement, Sixth St. and Pennsylvania Ave., NW, Room S–4302, Washington, D.C. 20580, (202) 326–3013 (voice), (202) 326–3259 (fax).

SUPPLEMENTARY INFORMATION:

I. Introduction

Petitioner, Osram Sylvania, Ltd., a manufacturer of lamp products, requests the Commission's authorization to market certain general service non-reflector incandescent light bulbs in bulk-pack shipping cartons that are labeled with the disclosures required by the Rule, instead of packaging and labeling the light bulbs for individual retail sale to consumers, where the light bulbs will be displayed for retail sale in the bulk-pack shipping cartons, under specific, limited conditions. The Petitioner's request, the Commission's analysis, and the interpretative amendment to the Rule adopted by the Commission are described below.

II. Overview of Rule's Labeling Requirements

On May 13, 1994, the Commission promulgated labeling requirements for various types of light bulbs and other lamp products as amendments to the Appliance Labeling Rule [1] in response to amendments the Energy Policy Act of 1992 (''EPACT'') [2] made to the Energy Policy and Conservation Act (''EPCA'').[3] As amended, EPCA directed the Commission to prescribe rules requiring that the labeling of specific lamp products indicate conspicuously on the packaging of the lamps, in a manner prescribed by the Commission, such information as the Commission deemed necessary to enable consumers ''to select the most energy efficient lamps which meet their requirements.'' Congress gave the Commission the discretion to determine what specific disclosures were necessary, and where and how they should be made. The covered lamp products include: general service fluorescent lamps, general service (both non-reflector and reflector) incandescent lamps, and medium screw base compact fluorescent lamps.

To provide consumers with the information they need to select the most energy efficient lamps that meet their requirements, the Commission adopted labeling provisions, under section 305.11(e)(1)(i) of the Rule, 16 CFR 305.11(e)(1)(i), that require that the principal display panel on package labels of general service incandescent light bulbs (both non-reflector and reflector) and medium screw base compact fluorescent lamps disclose clearly and conspicuously light output (in lumens), energy used (in watts), and life (in hours).[4] The labeling provisions also mandate that the principal display panel disclose the number of lamps included in the package (if more than one), and the design voltage of each lamp included in the package (if other than 120 volts). For multi-filament incandescent light bulbs, section 305.11(e)(1)(vii), 16 CFR 305.11(e)(1)(vii), requires that the principal display panel disclose clearly and conspicuously the bulb's light output and energy used at each of the bulb's levels of light output, and the bulb's life measured on the basis of the filament that fails first. Section 305.11(e)(1)(ii), 16 CFR 305.11(e)(1)(ii), specifies how the disclosures must appear on the label.

Labels for incandescent spot lights, flood lights, and down lights and for general service fluorescent lamps must include a capital letter ''E'' printed within a circle and followed by an asterisk referring to a specific statement that the encircled ''E'' means the lamp meets federal minimum efficiency standards. The encircled ''E'' must be disclosed clearly and conspicuously in color-contrasting ink, and in a typeface at least as large as either the manufacturer's name or logo or another logo disclosed on the label, whichever is larger. If the required statement is not disclosed on the principal display panel, the asterisk must be followed by the statement: ''*See [Back, Top, Side]

[1] Final rule [and Statement of Basis and Purpose] (''SBP''), 59 FR 25176 (1994) (codified at 16 CFR Part 305 (1997)). The lamp labeling requirements became effective May 15, 1995.

[2] Pub. L. No. 102–486, 106 Stat. 2776, 2817–2832 (Oct. 24, 1992) (codified at 42 U.S.C. 6201, 6291–6309).

[3] 42 U.S.C. 6291 *et seq.*

[4] Section 305.11(e)(1)(iii), 16 CFR 305.11(e)(1)(iii), requires that the light output, wattage and life disclosures for general service incandescent lamps and medium base compact fluorescent lamps be measured at 120 volts, regardless of the lamp's design voltage. If a lamp's design voltage is 125 volts or 130 volts, section 305.11(e)(1)(iii) requires that the disclosures each be followed by the phrase ''at 120 volts.'' It allows manufacturers and private labelers of 125 or 130 design voltage lamps to add disclosures of light output, wattage, and life at the lamp's design voltage if those disclosures are each followed by the phrase ''at (125/130) volts,'' and if all panels of the package that contain a claimed light output, wattage, or life clearly and conspicuously identify the lamp as ''(125 volt/130 volt).'' If the disclosures on the principal display panel of the package are for operation at 125 or 130 volts, and if the disclosures at 120 volts are made on a separate panel, the principal display panel must clearly and conspicuously disclose the following statement: ''This product is designed for (125/130) volts. When used on the normal line voltage of 120 volts, the light output and energy efficiency are noticeably reduced. See (side/back) panel for 120 volt ratings.''

panel for details.'' 16 CFR 305.11(e)(2)–(2)(i).[5]

Section 305.11(e)(1)(vi), 16 CFR 305.11(e)(1)(vi), requires that the principal display panel for each of these lamp products also clearly and conspicuously disclose the following Advisory Disclosure:

To save energy costs, find the bulbs with the (beam spread and) light output you need, then choose the one with the lowest watts.[6]

Section 305.11(e)(4), 16 CFR 305.11(e)(4), requires that cartons in which lamp products covered by the Rule are shipped in the United States or imported into the United States disclose clearly and conspicuously: ''These lamps comply with Federal energy labeling requirements.''

Last, section 305.4(a)(1), 16 CFR 305.4(a)(1), prohibits manufacturers and private labelers from distributing covered lamp products that are not labeled in accordance with the Rule's requirements; and section 305.4(a)(2), 16 CFR 305.4(a)(2), prohibits retailers and others from removing the labels or rendering them illegible.

III. Osram Sylvania's Petition

The Petitioner requests the Commission's authorization to market single-wattage 40, 60, 75, and 100 watt general service non-reflector incandescent light bulbs in bulk-pack shipping cartons that are labeled with the disclosures required by the Rule, instead of packaging and labeling the light bulbs for individual retail sale to consumers, where the light bulbs will be displayed for retail sale in the bulk-pack shipping cartons. In connection with its request, the Petitioner proposes the following conditions:

- Individual light bulbs would be etched with brand name identification, voltage, and wattage (which the Petitioner describes as current industry practice).
- Outer cartons would display the labeling disclosures that the Rule requires on the principal display panel of product packages. The Petitioner states, for example, that the cartons could be printed so that the required disclosures of light output, energy used, and life for all four wattages occupy a large area on every side of the outer carton to ensure that the required disclosures are visible no matter how the cartons are mixed or displayed.
- The authorization for these bulk-pack shipments would be limited to general service non-reflector incandescent light bulbs with a design voltage of 120 volts.
- The authorization would be limited to unusual or rare events such as ''store openings'' or ''manager specials.''

IV. Analysis and Amendment

Except for general service fluorescent lamp products (which were being distributed for retail sale to consumers in bulk packaging),[7] at the time of the original rulemaking proceeding all other light bulbs and other lamp products under discussion were being sold in individual retail-sale packages containing one or more lamps. As a result, the discussion of labeling requirements assumed that covered light bulbs and other lamp products would be packaged and labeled in retail-sale packaging units. The Rule, however, does not define the terms ''label,'' ''principal display panel,'' or ''package,'' as they are used in the Rule, and, except for general service fluorescent lamps, the Rule does not specify how manufacturers and private labelers of lamp products sold to consumers without retail-sale packaging must make the required labeling disclosures.

In considering the Petition, the Commission has determined that making the disclosures required by the Rule on the labels of the bulk shipping carton, where the bulk shipping carton is used to display the lamps for retail sale (''bulk shipping/retail display carton''), is acceptable. Making the required labeling disclosures on these bulk shipping/retail display cartons satisfies the statutory mandate that package labeling disclose ''such information as the Commission deems necessary to enable consumers to select the most energy efficient lamps which meet their requirements,'' and it is consistent with the Rule's labeling requirements. Where the bulk shipping/retail display carton is used to display these lamps for retail sale, labeling the carton with the required disclosures will ensure that: (1) The disclosures are made prior to purchase; (2) the disclosures enable consumers to select the most energy efficient lamps that meet their requirements; and (3) the disclosures are made in a manner and form that allow consumers to compare competing lamp products in making their purchase selections. For purposes of making the required labeling disclosures, therefore, the Commission interprets the terms ''label,'' ''principal display panel,'' and ''package'' in the Rule to include the shipping carton/retail display carton for lamp products that are not packaged for individual retail sale.

The Petitioner requested a limited, conditional authorization to make the required disclosures on bulk shipping cartons only for single-wattage, general service non-reflector incandescent light bulbs with a design voltage of 120 volts. The Commission, however, has determined that labeling the bulk shipping/retail display carton for lamp products that are not packaged for individual retail sale, under the circumstances described above, will provide consumers with the prepurchase information required by the Rule. This alternative to individual, retail-sale package labeling, therefore, is acceptable for all general service fluorescent lamps, medium screw base compact fluorescent lamps, and general service (both non-reflector and reflector) incandescent light bulbs covered by the Rule.

The Petitioner also suggested that certain conditions might be necessary to ensure that the labeling on the bulk shipping/retail display carton meets the requirements of the Rule. The Commission has determined that it is not necessary to impose the following conditions that were suggested by the Petitioner:

- *Marking individual lamps*—Some kind of marking or other identification on each individual bulb or tube enables consumers to select the specific bulb or tube they desire from the bulk carton. Marking or otherwise identifying each lamp with wattage and voltage is especially important for incandescent light bulbs because it is unsafe to use an incandescent light bulb with a higher wattage than the rating of the fixture in which it is used.[8] Manufacturers and private labelers, however, currently voluntarily mark incandescent light bulbs and other types of lamp products with wattage and design voltage information so that consumers can use them safely. The Commission believes that the marketplace provides incentives for manufacturers and private labelers to continue marking this information on lamp products, so it is unnecessary for the Commission to require such marking on lamp products marketed through bulk shipping/retail display cartons.[9]

[5] Manufacturers and private labelers that do not individually package, or put labels on, their general service fluorescent lamp products may meet the labeling disclosure requirements by permanently marking the lamp clearly and conspicuously with the encircled ''E.'' See SBP, 59 FR at 25198.

[6] The reference to beam spread is required only on labels of incandescent spot lights, flood lights, and down lights.

[7] The Rule already authorizes the use of an alternative to disclosures on individual package labeling for general service fluorescent lamps. See note 5, supra.

[8] SBP, 59 FR at 25185.

[9] See Repeal of rule [Statement of Basis and Purpose for repeal of the Light Bulb Rule, 16 CFR Part 409], 61 FR 33308, at 33311–12 (1996). In comments supporting the repeal of the Light Bulb Rule, which had required product marking, General Electric Co. stated that manufacturers would continue marking individual light bulbs with wattage and design voltage as a sound business practice that reduces liability and gives consumers important information, and the National Electrical Manufacturers Association stated that an international safety standard issued by the International Electrotechnical Commission requires

• *Making disclosures on all sides of the carton*—When lamps that are not packaged for individual retail sale are distributed to retailers in these bulk shipping/retail display cartons, the bulk shipping/retail display cartons will constitute the required labeling. The Rule already prohibits retailers from removing the required labels or rendering them illegible. Retailers, therefore, will be required to display these bulk-packaged lamp products for retail sale to consumers in the bulk shipping/retail display carton with the required labeling disclosures visible to consumers at the point of retail sale. It is unnecessary, therefore, for the Commission to require that the disclosures be made on labeling on multiple sides of the bulk shipping/retail display carton. Of course, manufacturers may choose to make the disclosures on all sides of the carton to facilitate display by the retailer.

• *Limiting use to unusual or rare sales events*—Because labeling on the bulk shipping/retail display cartons will contain the disclosures required by the Rule (to provide consumers with prepurchase information they need) and the cartons must be displayed at the point of retail sale with the required disclosures clearly visible to consumers prior to purchase, it is unnecessary to limit use of this labeling approach to unusual or rare sales events.

For the reasons explained above, the Commission adopts an interpretative amendment to the Rule to clarify that manufacturers and private labelers of all types of covered lamp products may meet the Rule's labeling disclosure requirements by making the required disclosures on the bulk shipping carton, where the lamps are not packaged or labeled for individual retail sale and where the lamps are displayed for retail sale in the bulk shipping/retail display carton.[10] The Rule continues to require that individual retail-sale packages of lamps be labeled with the disclosures required by the Rule, regardless of whether they are packaged in bulk shipping/retail display cartons that also contain the required labeling disclosures.

V. Exemption From Notice and Comment Requirements

The amendment the Commission adopts today interprets and clarifies the Rule by stating that, for any covered lamp product that is not packaged and labeled for individual retail sale, manufacturers and private labelers may meet the labeling requirements of the Rule by making the required disclosures on the labels of the bulk shipping/retail display carton, where the bulk shipping/retail display carton is used to display the lamps for retail sale. The information that will be provided to consumers, and the time at which it will be provided to them, is the same as that currently required by the Rule. This interpretative amendment does not create any new obligations, but only clarifies how the Commission interprets the terms ''principal display panel,'' ''label,'' and ''package'' for lamp products that are shipped in bulk shipping/retail display cartons without individual retail-sale packaging, where the lamps are displayed for retail sale in the bulk shipping/retail display cartons.[11] For these reasons, the Commission has determined that the amendment constitutes an interpretative rule, for which notice and public comment are not required under section 553(b)(A) of the Administrative Procedure Act (''APA''), 5 U.S.C. 553(b)(A). The amendment is effective today. Because the amendment is merely an interpretative rule, section 553(d)(2) of the APA, 5 U.S.C. 553(d)(2), which requires publication or service of a substantive rule not less than 30 days before its effective date, does not apply.

VI. Regulatory Flexibility Act

Because this amendment is an interpretative rule that is not covered by the notice and comment provisions of section 553(b) of the APA, the Regulatory Flexibility Act (''RFA''), 5 U.S.C. 601 *et seq.*, does not apply. Nevertheless, the Commission has considered the potential effect of the amendment on small entities. The Rule requires that manufacturers and other lamp product sellers: (1) disclose specific information in labels and catalogs; (2) submit annual reports to the Commission for certain lamp products;[12] and (3) substantiate the required disclosures and maintain records of that substantiating data. In promulgating these disclosure requirements, the Commission certified that the lamp labeling requirements in the Appliance Labeling Rule would not have ''a significant economic impact on a substantial number of small entities.'' The interpretative amendment adopted today does not impose any new obligations on sellers, large or small. The Commission has concluded that the impact of the amendment on small businesses as well as other entities within the affected industry, if any, will be minimal. Accordingly, this notice does not contain a regulatory analysis under section 604 of the RFA, 5 U.S.C. 604.

VII. Paperwork Reduction Act

The Paperwork Reduction Act (''PRA''), 44 U.S.C. 3501 *et seq.*, requires government agencies, before promulgating rules or other regulations that require ''collections of information'' (i.e., recordkeeping, reporting, or third-party disclosure requirements), to obtain approval from the Office of Management and Budget (''OMB''), 44 U.S.C. 3502. The Commission currently has OMB clearance for the Rule's information collection requirements (OMB No. 3084–0069). This interpretative amendment does not create any new information collection requirements.

List of Subjects in 16 CFR Part 305

Advertising, Consumer protection, Energy conservation, Household appliances, Labeling, Lamp products, Penalties, Reporting and recordkeeping requirements.

Authority: 42 U.S.C. 6294.

Text of Amendments

In consideration of the foregoing, the Commission amends title 16, chapter I, subchapter C of the Code of Federal Regulations, as follows:

PART 305—RULE CONCERNING DISCLOSURES REGARDING ENERGY CONSUMPTION AND WATER USE OF CERTAIN HOME APPLIANCE AND OTHER PRODUCTS REQUIRED UNDER THE ENERGY POLICY AND CONSERVATION ACT (''APPLIANCE LABELING RULE'')

1. The authority for part 305 continues to read as follows:

Authority: 42 U.S.C. 6294.

§ 305.11 [Amended]

2. Section 305.11(e) is amended by revising paragraph (e)(2), redesignating paragraphs (e)(3) and (e)(4) as paragraphs (e)(4) and (e)(5), and adding a new paragraph (e)(3) to read as follows:

* * * * *

(e) * * *

(2) Any covered product that is a general service fluorescent lamp or an incandescent reflector lamp shall be labeled clearly and conspicuously with a capital letter ''E'' printed within a circle and followed by an asterisk. The

marking wattage and voltage on general service incandescent light bulbs.

[10] As they currently must do under the Rule, manufacturers and private labelers also will have to disclose, clearly and conspicuously, on all cartons in which the lamps are shipped in the United States or imported into the United States, that: ''These lamps comply with Federal energy labeling requirements.''

[11] The interpretations of the terms ''principal display panel,'' ''label,'' and ''package'' in this Rule, are consistent with the requirements of, and the definitions of these terms in, the Fair Packaging and Labeling Act (''FPLA''), 15 U.S.C. 1541 *et seq.*, and in the Commission's Regulations under section 4 of the FPLA, 16 CFR Part 500.

[12] These reporting requirements currently have been stayed by the Commission.

label shall also clearly and conspicuously disclose, either in close proximity to that asterisk or elsewhere on the label, the following statement:

*[The encircled ''E''] means this bulb meets Federal minimum efficiency standards.

(i) If the statement is not disclosed on the principal display panel, the asterisk shall be followed by the following statement:

See [Back,Top, Side] panel for details.

(ii) For purposes of this paragraph (e), the encircled capital letter ''E'' shall be clearly and conspicuously disclosed in color-contrasting ink on the label of any covered product that is a general service fluorescent lamp and will be deemed ''conspicuous,'' in terms of size, if it appears in typeface at least as large as either the manufacturer's name or logo or another logo disclosed on the label, such as the ''UL'' or ''ETL'' logos, whichever is larger.

(3)(i) A manufacturer or private labeler who distributes general service fluorescent lamps, compact fluorescent lamps, or general service incandescent lamps (including incandescent reflector lamps) without labels attached to the lamps or without labels on individual retail-sale packaging for one or more lamps may meet the disclosure requirements of paragraphs (e)(1) and (e)(2) of this section by making the required disclosures, in the manner and form required by those paragraphs, on the bulk shipping cartons that are to be used to display the lamps for retail sale.

(ii) Instead of labeling any covered product that is a general service fluorescent lamp with the encircled ''E'' and with the statement described in paragraph (e)(2) of this section, a manufacturer or private labeler who would not otherwise put a label on such a lamp may meet the disclosure requirements of that paragraph by permanently marking the lamp clearly and conspicuously with the encircled ''E''.

* * * * *

By direction of the Commission, Commissioner Thompson dissenting.

Donald S. Clark,

Secretary.

[FR Doc. 98–19212 Filed 7–17–98; 8:45 am]

BILLING CODE 6750–01–P

DEPARTMENT OF HEALTH AND HUMAN SERVICES

Food and Drug Administration

21 CFR Part 173

[Docket No. 94F–0040]

Secondary Direct Food Additives Permitted in Food for Human Consumption

AGENCY: Food and Drug Administration, HHS.

ACTION: Final rule.

SUMMARY: The Food and Drug Administration (FDA) is amending the food additive regulations to provide for the safe use of chlorine dioxide as an antimicrobial agent in water used to wash certain fruits and vegetables. This action is in response to a petition filed by the National Food Processors Association.

DATES: The regulation is effective July 20, 1998; written objections and requests for a hearing by August 19, 1998.

ADDRESSES: Submit written objections to the Dockets Management Branch (HFA–305), Food and Drug Administration, 5630 Fishers Lane, rm. 1061, Rockville, MD 20852.

FOR FURTHER INFORMATION CONTACT: Robert L. Martin, Center for Food Safety and Applied Nutrition (HFS–217), Food and Drug Administration, 200 C St. SW., Washington, DC 20204–0001, 202–418–3074.

SUPPLEMENTARY INFORMATION: In a notice published in the **Federal Register** of March 24, 1994 (59 FR 13970), FDA announced that a food additive petition (FAP 4A4415) had been filed by the National Food Processors Association, 1401 New York Ave. NW., Washington, DC 20005. The petition proposed that the food additive regulations be amended to provide for the safe use of chlorine dioxide to disinfect waters in contact with fresh fruits and vegetables intended for human consumption. In its evaluation of the petition, the agency has concluded that the water is not disinfected, but the microbial contamination of the water is reduced.

An antimicrobial added to water used to wash fruits and vegetables may be subject to regulation as a food additive under section 409 of the Federal Food, Drug, and Cosmetic Act (the act) (21 U.S.C. 348), or may be subject to regulation as a pesticide chemical under section 408 of the act (21 U.S.C. 346a), depending upon the status of the fruit or vegetable which is washed with the antimicrobial solution. FDA regulates antimicrobials added to water used in food and for food processing.[1] An antimicrobial substance added to water used to wash fruits and vegetables that are not raw agricultural commodities[2] is an antimicrobial ''used in food and for food processing.'' EPA regulates, as pesticides under FIFRA (7 U.S.C. 136(u)) and as pesticide chemicals under section 201(q) of the act, antimicrobial substances directed against microbes in water used to wash raw agricultural commodities.

The petition proposed the use of chlorine dioxide in water for contact with fresh fruits and vegetables, regardless of whether such fruits and vegetables are raw agricultural commodities or processed food. This proposed use would include uses subject to EPA regulatory authority, as well as FDA jurisdiction. Because FDA can act only to approve those uses subject to its jurisdiction, the approval set out in this final rule is limited to the use of chlorine dioxide in water used to wash fruits and vegetables that are not raw agricultural commodities. Any person who wishes to request an approval for the use of chlorine dioxide in water used to wash raw agricultural commodities should consult with EPA to ascertain whether a FIFRA pesticide registration and a section 408 of the act tolerance or exemption from the requirement for such tolerance would be required by EPA.

FDA has evaluated data in the petition and other relevant material. Based on this information, the agency concludes that the proposed use of chlorine dioxide to reduce the microbial contamination of water used to wash fruits and vegetables, other than raw agricultural commodities, is safe and that the additive will achieve its intended technical effect. FDA has also considered the safety of chlorine dioxide breakdown products, i.e., chlorite and chlorate, and concludes

[1] This is consistent with the memorandum of understanding (MOU) between FDA and the Environmental Protection Agency (EPA) on the jurisdiction over substances in drinking water (44 FR 42775, July 20, 1979). Moreover, an antimicrobial that is added to water used in food and for food processing is an antimicrobial that is used in or on a ''processed food.'' The use of an antimicrobial in or on processed food is subject to FDA's regulatory authority as a food additive under section 409 of the act. Such use is not a pesticide use because pests that are in or on processed food are excepted from the definition of fungus in 7 U.S.C. 136(k) and from the definition of pest in 40 CFR 152.5. Therefore, such an antimicrobial is neither a ''pesticide'' under the Federal Insecticide, Fungicide, and Rodenticide Act (FIFRA) (7 U.S.C. 136(u)) nor a ''pesticide chemical'' under section 201(q) of the act (21 U.S.C. 321(q)).

[2] Such nonraw agricultural commodities include, for example, those that are cut, peeled, sliced, chopped, ground, irradiated, or cooked.

that residues of these compounds would be removed from the treated produce if the treatment with chlorine dioxide is followed by a potable water rinse or by blanching, cooking or canning. Therefore, the agency is including in the regulation the requirement that treatment of fruits and vegetables with chlorine dioxide shall be followed by a potable water rinse or by blanching, cooking or canning. Based on the agency's conclusions concerning this proposed use, the regulations in 21 CFR 173.300 should be amended as set forth below.

In accordance with § 171.1(h) (21 CFR 171.1(h)), the petition and the documents that FDA considered and relied upon in reaching its decision to approve the petition are available for inspection at the Center for Food Safety and Applied Nutrition by appointment with the information contact person listed above. As provided in § 171.1(h), the agency will delete from the documents any materials that are not available for public disclosure before making the documents available for inspection.

In the notice of filing, FDA gave interested parties an opportunity to submit comments on the petitioner's environmental assessment. FDA received no comments in response to that notice. The agency has carefully considered the potential environmental effects of this action. FDA has concluded that the action will not have a significant impact on the human environment, and that an environmental impact statement is not required. The agency's finding of no significant impact and the evidence supporting that finding, contained in an environmental assessment, may be seen in the Dockets Management Branch (address above) between 9 a.m. and 4 p.m., Monday through Friday.

Any person who will be adversely affected by this regulation may at any time on or before August 19, 1998, file with the Dockets Management Branch (address above) written objections thereto. Each objection shall be separately numbered, and each numbered objection shall specify with particularity the provisions of the regulation to which objection is made and the grounds for the objection. Each numbered objection on which a hearing is requested shall specifically so state. Failure to request a hearing for any particular objection shall constitute a waiver of the right to a hearing on that objection. Each numbered objection for which a hearing is requested shall include a detailed description and analysis of the specific factual information intended to be presented in support of the objection in the event that a hearing is held. Failure to include such a description and analysis for any particular objection shall constitute a waiver of the right to a hearing on the objection. Three copies of all documents shall be submitted and shall be identified with the docket number found in brackets in the heading of this document. Any objections received in response to the regulation may be seen in the Dockets Management Branch between 9 a.m. and 4 p.m., Monday through Friday.

This final rule contains no collections of information. Therefore, clearance of the Office of Management and Budget under the Paperwork Reduction Act of 1995 is not required.

List of Subjects in 21 CFR Part 173

Food additives.

Therefore, under the Federal Food, Drug, and Cosmetic Act and under authority delegated to the Commissioner of Food and Drugs, 21 CFR part 173 is amended as follows:

PART 173—SECONDARY DIRECT FOOD ADDITIVES PERMITTED IN FOOD FOR HUMAN CONSUMPTION

1. The authority citation for 21 CFR part 173 continues to read as follows:

Authority: 21 U.S.C. 321, 342, 348.

2. Section 173.300 is amended by revising paragraph (b) to read as follows:

§ 173.300 Chlorine dioxide.

* * * * *

(b)(1) The additive may be used as an antimicrobial agent in water used in poultry processing in an amount not to exceed 3 parts per million (ppm) residual chlorine dioxide as determined by Method 4500–ClO_2 E, referenced in paragraph (a) of this section, or an equivalent method.

(2) The additive may be used as an antimicrobial agent in water used to wash fruits and vegetables that are not raw agricultural commodities in an amount not to exceed 3 ppm residual chlorine dioxide as determined by Method 4500–ClO_2 E, referenced in paragraph (a) of this section, or an equivalent method. Treatment of the fruits and vegetables with chlorine dioxide shall be followed by a potable water rinse or by blanching, cooking, or canning.

Dated: July 9, 1998.

William K. Hubbard,

Associate Commissioner for Policy Coordination.

[FR Doc. 98–19314 Filed 7–17–98; 8:45 am]

BILLING CODE 4160–01–F

DEPARTMENT OF HEALTH AND HUMAN SERVICES

Food and Drug Administration

21 CFR Part 178

[Docket No. 97F–0405]

Indirect Food Additives: Adjuvants, Production Aids, and Sanitizers

AGENCY: Food and Drug Administration, HHS.

ACTION: Final rule.

SUMMARY: The Food and Drug Administration (FDA) is amending the food additive regulations to provide for the safe use of aluminum borate as an antistatic agent and/or antifogging agent for olefin polymers intended for use as packaging materials in contact with food. This action is in response to a petition filed by Shikoku Chemical Corp.

DATES: The regulation is effective July 20, 1998; written objections and requests for a hearing by August 19, 1998.

ADDRESSES: Submit written objections to the Dockets Management Branch (HFA–305), Food and Drug Administration, 5630 Fishers Lane, rm. 1061, Rockville, MD 20852.

FOR FURTHER INFORMATION CONTACT: Vir D. Anand, Center for Food Safety and Applied Nutrition (HFS–215), Food and Drug Administration, 200 C St. SW., Washington, DC 20204, 202–418–3081.

SUPPLEMENTARY INFORMATION: In a notice published in the **Federal Register** of September 25, 1997 (62 FR 50387), FDA announced that a food additive petition (FAP 7B4559) had been filed by Shikoku Chemical Corp., c/o SRS International Corp., suite 1000, 1625 K St. NW., Washington, DC 20006–1604. The petition proposed to amend the food additive regulations in § 178.3130 *Antistatic and/or antifogging agents in food-packaging materials* (21 CFR 178.3130) to provide for the safe use of aluminum borate as an antistatic and/or antifogging agent for olefin polymers complying with 21 CFR 177.1520(c) as packaging materials intended for use in contact with food.

FDA has evaluated data in the petition and other relevant material. Based on this information, the agency concludes that the proposed use of the additive is safe, that the additive will achieve its intended technical effect, and therefore, that the regulations in § 178.3130 should be amended as set forth below.

In accordance with § 171.1(h) (21 CFR 171.1(h)), the petition and the

documents that FDA considered and relied upon in reaching its decision to approve the petition are available for inspection at the Center for Food Safety and Applied Nutrition by appointment with the information contact person listed above. As provided in § 171.1(h), the agency will delete from the documents any materials that are not available for public disclosure before making the documents available for inspection.

The agency has previously considered the environmental effects of this rule as announced in the notice of filing for FAP 7B4559 (62 FR 50387, September 25, 1997). FDA has concluded that the action is of a type that does not individually or cumulatively have a significant effect on the human environment, and therefore, neither an environmental assessment nor an environmental impact statement is required.

Any person who will be adversely affected by this regulation may at any time on or before August 19, 1998, file with the Dockets Management Branch (address above) written objections thereto. Each objection shall be separately numbered, and each numbered objection shall specify with particularity the provisions of the regulation to which objection is made and the grounds for the objection. Each numbered objection on which a hearing is requested shall specifically so state. Failure to request a hearing for any particular objection shall constitute a waiver of the right to a hearing on that objection. Each numbered objection for which a hearing is requested shall include a detailed description and analysis of the specific factual information intended to be presented in support of the objection in the event that a hearing is held. Failure to include such a description and analysis for any particular objection shall constitute a waiver of the right to a hearing on the objection. Three copies of all documents shall be submitted and shall be identified with the docket number found in brackets in the heading of this document. Any objections received in response to the regulation may be seen in the Dockets Management Branch between 9 a.m. and 4 p.m., Monday through Friday.

This final rule contains no collections of information. Therefore, clearance by the Office of Management and Budget under the Paperwork Reduction Act of 1995 is not required.

List of Subjects in 21 CFR Part 178

Food additives, Food packaging.

Therefore, under the Federal Food, Drug, and Cosmetic Act and under authority delegated to the Commissioner of Food and Drugs and redelegated to the Director, Center for Food Safety and Applied Nutrition, 21 CFR part 178 is amended as follows:

PART 178—INDIRECT FOOD ADDITIVES: ADJUVANTS, PRODUCTION AIDS, AND SANITIZERS

1. The authority citation for 21 CFR part 178 continues to read as follows:

Authority: 21 U.S.C. 321, 342, 348, 379e.

2. Section 178.3130 is amended in the table in paragraph (b) by alphabetically adding an entry under the headings ''List of substances'' and ''Limitations'' to read as follows:

§ 178.3130 Antistatic and/or antifogging agents in food-packaging materials.

* * * * *

(b) * * *

ist of substances

List of substances	Limitations
* * *	* * * *
Aluminum Borate ($(9Al_2O_3)\bullet 2(B_2O_3)$, CAS Reg. No. 11121–16–7) produced by reaction between aluminum oxide and/or aluminum hydroxide with boric acid and/or metaboric acid at temperatures in excess of 1000 °C	For use only: 1. At levels not to exceed 1 percent by weight of polypropylene films complying with § 177.1520(c) of this chapter, item 1.1, of polyethylene films complying with § 177.1520(c) of this chapter, items 2.1 and 2.2 and having a density greater than 0.94 gram per cubic centimeter, and of polyolefin copolymer films complying with § 177.1520(c) of this chapter, items 3.1(a), 3.1(b), 3.2(a), and 3.2(b). The finished polymers may be used in contact with all food types identified in Table 1 of § 176.170(c) of this chapter, under conditions of use A through H as described in Table 2 of § 176.170(c) of this chapter. The thickness of the films shall not exceed 0.005 inch. 2. At levels not to exceed 2 percent by weight of polypropylene films complying with § 177.1520(c) of this chapter, item 1.1, of polyethylene films complying with § 177.1520(c) of this chapter, items 2.1 and 2.2 and having a density greater than 0.94 gram per cubic centimeter, and of polyolefin copolymer films complying with § 177.1520(c) of this chapter, items 3.1(a), 3.1(b), 3.2(a), and 3.2(b). The finished polymers may be used in contact with all food types identified in Table 1 of § 176.170(c) of this chapter under conditions of use B through H as described in Table 2 of § 176.170(c) of this chapter. The thickness of the films shall not exceed 0.005 inch.
* * *	* * * *

Dated: June 24, 1998.

L. Robert Lake,

Director, Office of Policy, Planning and Strategic Initiatives, Center for Food Safety and Applied Nutrition.

[FR Doc. 98–19174 Filed 7–17–98; 8:45 am]

BILLING CODE 4160–01–F

DEPARTMENT OF HEALTH AND HUMAN SERVICES

Food and Drug Administration

21 CFR Parts 522 and 556

Implantation or Injectable Dosage Form New Animal Drugs; Flunixin Meglumine

AGENCY: Food and Drug Administration, HHS.

ACTION: Final rule.

SUMMARY: The Food and Drug Administration (FDA) is amending the animal drug regulations to reflect approval of a supplemental new animal drug application (NADA) filed by Schering-Plough Animal Health Corp. The supplemental NADA provides for veterinary prescription use of flunixin meglumine solution, intravenously, for control of pyrexia associated with bovine respiratory disease and endotoxemia, and control of inflammation in endotoxemia, in beef and nonlactating dairy cattle.

EFFECTIVE DATE: July 20, 1998.

FOR FURTHER INFORMATION CONTACT: Estella Z. Jones, Center for Veterinary Medicine (HFV–135), Food and Drug Administration, 7500 Standish Pl., Rockville, MD 20855, 301–594–1643.

SUPPLEMENTARY INFORMATION: Schering-Plough Animal Health Corp., 1095 Morris Ave., P.O. Box 3182, Union, NJ 07083–1982, is sponsor of NADA 101–479 Banamine® (flunixin meglumine) Injectable Solution that provides for veterinary prescription use of flunixin meglumine, intravenously or intramuscularly, for alleviation of inflammation and pain associated with musculoskeletal disorders, and alleviation of visceral pain associated with colic in the horse. The sponsor filed a supplemental NADA that provides for veterinary prescription use of flunixin meglumine solution, intravenously, for control of pyrexia associated with bovine respiratory disease and endotoxemia, and control of inflammation in endotoxemia, in beef cattle and nonlactating dairy cattle. The supplemental NADA is approved as of May 6, 1998, and the regulations are amended in 21 CFR 522.970 by revising paragraph (b), by redesignating existing paragraph (c) as (d), by revising newly redesignated paragraph (d), and by adding paragraph (c) to reflect the approval. The basis for approval is discussed in the freedom of information summary.

In addition, a tolerance for residues of flunixin meglumine in edible tissues of cattle has not been previously established. Section 556.286 is added to provide tolerances for flunixin meglumine residues in cattle liver (target tissue) and in cattle muscle.

Also, in addition to codifying a tolerance for flunixin residues in cattle tissues, FDA is amending the regulation to codify the acceptable daily intake (ADI) for total residues of flunixin. The ADI is the amount of total drug residue that can be consumed by humans every day. Previously, FDA had codified safe concentrations which represent the ADI corrected for consumption. The safe concentrations were confusing because few individuals understood the relationship between safe concentrations, a value representing total residues, and tolerance, the part of the drug residue in a given tissue that is detected by an analytical method. To eliminate this confusion, FDA is codifying the ADI.

Under section 512(c)(2)(F)(iii) of the Federal Food, Drug, and Cosmetic Act (21 U.S.C. 360b(c)(2)(F)(iii)), this supplemental approval for beef cattle and nonlactating dairy cattle qualifies for 3 years of marketing exclusivity beginning May 6, 1998, because the supplemental application contains substantial evidence of the effectiveness of the drug involved, any studies of animal safety or, in the case of food-producing animals, human food safety studies (other than bioequivalence or residue studies) required for approval and conducted or sponsored by the applicant. Three years marketing exclusivity is limited to use of the drug for the control of pyrexia associated with bovine respiratory disease and endotoxemia, and control of inflammation in endotoxemia, in beef cattle and nonlactating dairy cattle.

In accordance with the freedom of information provisions of 21 CFR part 20 and 514.11(e)(2)(ii), a summary of safety and effectiveness data and information submitted to support approval of this application may be seen in the Dockets Management Branch (HFA–305), Food and Drug Administration, 5630 Fishers Lane, rm. 1061, Rockville, MD 20852, between 9 a.m. and 4 p.m., Monday through Friday.

The agency has carefully considered the potential environmental effects of this action. FDA has concluded that the action will not have a significant impact on the human environment, and that an environmental impact statement is not required. The agency's finding of no significant impact and the evidence supporting that finding, contained in an environmental assessment, may be seen in the Dockets Management Branch (address above) between 9 a.m. and 4 p.m., Monday through Friday.

List of Subjects

21 CFR Part 522

Animal drugs.

21 CFR Part 556

Animal drugs, Foods.

Therefore, under the Federal Food, Drug, and Cosmetic Act and under authority delegated to the Commissioner of Food and Drugs and redelegated to the Center for Veterinary Medicine, 21 CFR parts 522 and 556 are amended as follows:

PART 522—IMPLANTATION OR INJECTABLE DOSAGE FORM NEW ANIMAL DRUGS

1. The authority citation for 21 CFR part 522 continues to read as follows:

Authority: 21 U.S.C. 360b.

2. Section 522.970 is amended by revising paragraph (b), by redesignating paragraph (c) as (d), by revising newly redesignated paragraph (d), and by adding paragraph (c) to read as follows:

§ 522.970 Flunixin meglumine solution.

* * * * *

(b) *Sponsors.* See 000061 in § 510.600(c) of this chapter for use as in paragraph (d) of this section. See 000856 and 059130 for use as in paragraph (d)(1) of this section only.

(c) *Related tolerances.* See § 556.286 of this chapter.

(d) *Conditions of use*—(1) *Horses*—(i) *Amount.* 0.5 milligram of flunixin per pound of body weight (1 milliliter per 100 pounds) per day.

(ii) *Indications for use.* For alleviation of inflammation and pain associated with musculoskeletal disorders, and alleviation of visceral pain associated with colic.

(iii) *Limitations.* For musculoskeletal disorders, administer intravenously or intramuscularly for up to 5 days. For colic, administer a single dose intravenously—treatment may be repeated when signs of colic recur. Caution: The effect of this drug on pregnancy has not been determined. Not for use in horses intended for food. Federal law restricts this drug to use by or on the order of a licensed veterinarian.

(2) *Beef cattle and nonlactating dairy cattle*—(i) *Amount.* 1.1 to 2.2 milligrams per kilogram of body weight (0.5 to 1 milligram per pound, 1 to 2 milliliters per 100 pounds), once a day as a single dose or divided into 2 doses administered at 12-hour intervals for up to 3 days.

(ii) *Indications for use.* For control of pyrexia associated with bovine respiratory disease and endotoxemia. Also indicated for control of inflammation in endotoxemia.

(iii) *Limitations.* Do not slaughter for food use within 4 days of last treatment. Not for use in lactating or dry dairy cows. A withdrawal period has not been established for use in preruminating calves. Do not use in calves to be processed for veal. Do not use in bulls intended for breeding as reproductive effects in this class of cattle have not been studied. Federal law restricts this drug to use by or on the order of a licensed veterinarian.

PART 556—TOLERANCES FOR RESIDUES OF NEW ANIMAL DRUGS IN FOOD

3. The authority citation for 21 CFR part 556 continues to read as follows:

Authority: 21 U.S.C. 342, 360b, 371.

4. Section 556.286 is added to subpart B to read as follows:

§ 556.286 Flunixin meglumine.

(a) *Acceptable daily intake (ADI).* The ADI for total residues of flunixin is 0.72 micrograms per kilogram of body weight per day.

(b) *Tolerances.* For residues of parent flunixin free acid of 0.125 part per million (ppm) in cattle liver (target tissue) and 0.025 ppm in cattle muscle are established.

Dated: July 9, 1998.

Stephen F. Sundlof,

Director, Center for Veterinary Medicine.

[FR Doc. 98–19176 Filed 7–17–98; 8:45 am]

BILLING CODE 4160–01–F

DEPARTMENT OF HEALTH AND HUMAN SERVICES

Food and Drug Administration

21 CFR Part 558

New Animal Drugs For Use In Animal Feeds; Bacitracin Methylene Disalicylate and Zoalene

AGENCY: Food and Drug Administration, HHS.

ACTION: Final rule.

SUMMARY: The Food and Drug Administration (FDA) is amending the animal drug regulations to reflect approval of a new animal drug application (NADA) filed by Alpharma Inc. The NADA provides for using approved bacitracin methylene disalicylate and zoalene Type A medicated articles to make Type C medicated turkey feeds.

EFFECTIVE DATE: July 20, 1998.

FOR FURTHER INFORMATION CONTACT: Charles J. Andres, Center for Veterinary Medicine (HFV–128), Food and Drug Administration, 7500 Standish Pl., Rockville, MD 20855, 301–594–1600.

SUPPLEMENTARY INFORMATION: Alpharma Inc., One Executive Dr., P.O. Box 1399, Fort Lee, NJ 07024, is sponsor of NADA 141–085 which provides for combining approved BMD® (10, 25, 30, 40, 50, 60, or 75 gram per pound (g/lb) bacitracin methylene disalicylate), and Zoamix® (113.5 g/lb zoalene) Type A medicated articles to make Type C medicated feeds for growing turkeys containing 4 to 50 g per ton (g/t) bacitracin methylene disalicylate and 113.5 to 170.3 g/t zoalene. The Type C medicated turkey feed is used for prevention and control of coccidiosis, and for increased rate of weight gain and improved feed efficiency. The NADA is approved as of June 3, 1998, and the regulations are amended in 21 CFR 558.76(d)(3) by adding paragraph (d)(3)(xv), and in 21 CFR 558.680(c), in the table, in item (iii) by adding an entry to reflect the approval. The basis for approval is discussed in the freedom of information summary.

In accordance with the freedom of information provisions of 21 CFR part 20 and 514.11(e)(2)(ii), a summary of safety and effectiveness data and information submitted to support approval of this application may be seen in the Dockets Management Branch (HFA–305), Food and Drug Administration, 5630 Fishers Lane, rm. 1061, Rockville, MD 20852, between 9 a.m. and 4 p.m., Monday through Friday.

FDA has determined under 21 CFR 25.33(a)(2) that this action is of a type that does not individually or cumulatively have a significant effect on the human environment. Therefore, neither an environmental assessment nor an environmental impact statement is required.

List of Subjects in 21 CFR Part 558

Animal drugs, Animal feeds.

Therefore, under the Federal Food, Drug, and Cosmetic Act and under authority delegated to the Commissioner of Food and Drugs and redelegated to the Center for Veterinary Medicine, 21 CFR part 558 is amended as follows:

PART 558—NEW ANIMAL DRUGS FOR USE IN ANIMAL FEEDS

1. The authority citation for 21 CFR part 558 continues to read as follows:

Authority: 21 U.S.C. 360b, 371.

2. Section 558.76 is amended by adding paragraph (d)(3)(xv) to read as follows:

§ 558.76 Bacitracin methylene disalicylate.

* * * * *

(d) * * *

(3) * * *

(xv) Zoalene alone or in combination as in § 558.680.

3. Section 558.680 is amended in the table in paragraph (c)(1) in item (iii) by alphabetically adding an entry for ''Bacitracin methylene disalicylate 4–50'' to read as follows:

§ 558.680 Zoalene.

* * * * *

(c) * * *

(1) * * *

Zoalene in grams/ton	Combination in grams/ton	Indications for use	Limitations
* *	*	* *	* *
(iii) 113.5–170.3 (0.0125–0.01875%)			

Zoalene in grams/ton	Combination in grams/ton	Indications for use	Limitations
	Bacitracin methylene disalicylate 4–50.	Turkeys; prevention and control of coccidiosis, and increased rate of weight gain and improved feed efficiency.	For turkeys grown for meat purposes only, not to be fed to laying birds, feed continuously as sole ration until 14 to 16 weeks of age.
* *	*	* *	* *

* * * * *

Dated: July 9, 1998.

Stephen F. Sundlof,

Director, Center for Veterinary Medicine.

[FR Doc. 98–19177 Filed 7–17–98; 8:45 am]

BILLING CODE 4160–01–F

INTERNATIONAL DEVELOPMENT COOPERATION AGENCY

Agency for International Development

22 CFR Part 228

RIN 0412–AA37

Rules on Source, Origin and Nationality for Commodities and Services Financed by USAID: Miscellaneous Amendments

AGENCY: United States Agency for International Development (USAID), IDCA.

ACTION: Final rule.

SUMMARY: USAID is amending its regulation on source, origin and nationality for commodities and services financed by USAID by revising two rules, one on system determinations for commodities and one on ocean transportation eligibility, and by clarifying waiver provisions.

The final rule amends the coverage on systems determinations to allow components of a commodity system to be shipped to a cooperating country without first being shipped to and assembled in an eligible country. This should reduce the cost of these transactions by reducing unnecessary shipments. The rules on eligibility of transshipments are amended to require that suppliers obtain a determination from USAID that direct service on U.S. a flag vessel is not available before transshipment from a U.S. flag to a non-U.S. flag vessel will be eligible for USAID financing. This will ensure compliance with Cargo Preference requirements that direct U.S. flag service be used when available.

DATES: Effective September 18, 1998.

FOR FURTHER INFORMATION CONTACT: Kathleen O'Hara, Office of Procurement, Policy Division (M/OP/P) USAID, Washington, DC 20523–. Telephone: (202) 712–4759, facsimile: (202) 216–3395, e-mail address: kohara@usaid.gov.

SUPPLEMENTARY INFORMATION: The regulation at 22 CFR part 228 was published as a final rule September 15, 1996 (61 FR 53615). After operating under the regulation for a year a few areas have been identified that need some additional coverage or clarification. USAID published a proposed rule to amend 22 CFR part 228 on January 23, 1998 (63 FR 3506). The only comment received was from the American Maritime Congress which affirmed its support for the revisions to the ocean transportation eligibility policy. The rule is being amended as proposed.

List of Subjects in 22 CFR Part 228

Administrative practice and procedure, Commodity procurement, Grant programs—foreign relations.

Accordingly 22 CFR part 228 is amended as follows:

PART 228—[AMENDED]

1. The authority citation continues to read as follows:

Authority: Sec. 621, Pub. L. 87–195, 75 Stat. 445 (22 U.S.C. 2381), as amended; E.O. 12163, Sept. 29, 1979, 44 FR 56673; 3 CFR 1979 Comp., p. 435.

2. In § 228.11, paragraph (e) is revised as follows:

§ 228.11 Source and origin of commodities.

* * * * *

(e) *Systems determination.* When a system consisting of more than one produced commodity is procured as a single separately priced item, USAID may determine that the system itself shall be considered a produced commodity. When a determination is made to treat a system as a produced commodity, component commodities which originate from other than an authorized source country may be shipped directly to, and the system assembled in, the cooperating country, unless USAID specifically determines that assembly and shipment take place in an authorized source country. Transportation costs must still meet the requirements in subpart C of this part in order for them to be eligible for USAID financing. USAID, or the importer in the case of a Commodity Import Program, shall inform the supplier of any system determination.

* * * * *

3. Section 228.21 is amended by adding a sentence at the end of paragraph (a) and revising paragraph (c)(4) as follows:

§ 228.21 Ocean transportation.

(a) * * * USAID's policy on implementation of the Cargo Preference Act is in USAID's Automated Directives System, Chapter 315.

* * * * *

(c)* * *

(4) USAID will finance costs incurred on vessels under flag registry of any Geographic Code 935 country if the costs are part of the total cost on a through bill of lading that is paid to a carrier for initial carriage on a vessel which is eligible in accordance with paragraphs (c)(1), (2) or (3) of this section; provided that for shipments originating on a U.S. flag vessel with transshipment to a non-U.S. flag vessel, the supplier must obtain a determination that direct serve on a U.S. flag vessel is not available from USAID's Office of Procurement, Transportation Division, 1300 Pennsylvania Avenue NW., Washington, DC 20523–7900.

4. Section 228.51, paragraph (a) is amended by revising the introductory paragraph and paragraph (a)(1) as follows:

§ 228.51 Commodities.

(a) *Waiver criteria.* Any waiver must be based upon one of the criteria listed in this section. Waivers to Geographic Code 899 or Code 935 which are justified under paragraph (a)(2) or (3) of this section may only be authorized on a case-by-case basis. A waiver may be authorized when:

(1) A commodity required for assistance is of a type that is not produced in or available for purchase in

the United States; in addition, for waivers to any country or Geographic code beyond Code 941 and the cooperating country, the commodity is of a type that is not produced in or available for purchase in any country in Code 941 or the cooperating country.

* * * * *

5. Section 228.53 is amended by revising the introductory paragraph and paragraph (a) as follows:

§ 228.53 Suppliers of services—privately owned commercial suppliers and non-profit organizations.

Waiver criteria. Any waiver must be based upon one of the criteria listed in this section. Waivers to Geographic Code 899 or Code 935 which are justified under paragraph (b) or (c) of this section may only be authorized on a case-by-case basis. A waiver may be authorized when:

(a) Services required for assistance are of a type that are not available for purchase in the United States; in addition, for waivers to any country or Geographic Code beyond Code 941 and the cooperating country, the services are of a type that are not available for purchase in any country in Code 941 or the cooperating country.

* * * * *

Dated: May 26, 1998.

Marcus L. Stevenson,

Procurement Executive.

[FR Doc. 98–19253 Filed 7–17–98; 8:45 am]

BILLING CODE 6116–71–M

DEPARTMENT OF TRANSPORTATION

Coast Guard

33 CFR Part 100

[CGD08–98–040]

RIN 2115–AE46

Special Local Regulations; Cross River Swim Paducah Summerfest, Ohio River Mile 934.5 to 936.0, Paducah, KY

AGENCY: Coast Guard, DOT.

ACTION: Temporary final rule.

SUMMARY: Special local regulations are being adopted for the Cross River Swim Paducah Summerfest on the Ohio River. This event will be held on Sunday, July 19, 1998, between 1:30 p.m. and 3:30 p.m. on the riverfront in Paducah, KY. These regulations are needed to provide for the safety of life on navigable waters during the event.

DATES: These regulations become effective at 1:30 p.m. and terminate at 3:30 p.m. on July 19, 1998.

FOR FURTHER INFORMATION CONTACT: LTJG Tom Boyles, Coast Guard Marine Safety Office, Paducah, Kentucky at (502) 442–1621.

SUPPLEMENTARY INFORMATION:

Drafting Information: The drafters of this regulation are LTJG Tom Boyles, Project Officer, Coast Guard Marine Safety Office, Paducah, Kentucky and LTJG Michele Woodruff, Project Attorney, Eighth Coast Guard District Legal Office.

Regulatory History

In accordance with 5 U.S.C. 553, a notice of proposed rulemaking has not been published for this regulation and good cause exists for making it effective in less than 30 days from the date of publication in the **Federal Register**. Following normal rulemaking procedures would have been impractical. The application to hold the event was not received with sufficient time remaining to publish proposed rules in advance of the event or to provide for a delayed effect date.

Background and Purpose

The marine event requiring this regulation is the Cross River Swim Paducah Summerfest. Approximately twenty swimmers will participate in a race across the Ohio River. Various recreational boats will also be involved as each swimmer will be accompanied by a safety vessel. Spectators will be able to view the event from areas designated by the sponsor. This event is sponsored by the Paducah Summerfest.

Regulatory Evaluation

This rule is not a significant regulatory action under section 3(f) of Executive Order 12866 and does not require an assessment of potential costs and benefits under section 6(a)(3) of the order. It has been exempted from review by the Office of Management and Budget under that order. It is not significant under the regulatory policies and procedures of the Department of Transportation (DOT) (44 FR 11040; February 26, 1979). The Coast Guard expects the economic impact of this rule to be so minimal that a full Regulatory Evaluation under paragraph 10e of the regulatory policies and procedures of DOT is unnecessary, as this regulation will be in effect for approximately two hours in a limited area of the Ohio River.

Small Entities

Under the Regulatory Flexibility Act (5 U.S.C. 601 *et seq.*), the Coast Guard must consider whether this rule will have a significant economic impact on a substantial number of small entities. ''Small entities'' include small businesses, not-for-profit organizations that are independently owned and operated and are not dominant in their field, and governmental jurisdictions with populations of less than 50,000.

Therefore, the Coast Guard certifies under section 605(b) that this rule will not have a significant effect upon a substantial number of small entities, because the regulation is in effect for approximately eighteen hours in a limited part of the Ohio River.

Collection of Information

This rule contains no collection of information requirements under the Paperwork Reduction Act (44 U.S.C. 3501 *et seq.*).

Federalism Assessment

This action has been analyzed in accordance with the principles and criteria contained in Executive Order 12612, and it has been determined that the rulemaking does not have sufficient Federalism implications to warrant the preparation of a Federalism Assessment.

Environmental Assessment

The Coast Guard has considered the environmental impact of this action consistent with section 2–1, paragraph (34)(h), Commandant Instruction M16475.1C and has determined that this rule is categorically excluded from further environmental documentation.

List of Subject in 33 CFR Part 100

Marine safety, Navigation (water), Reporting and recordkeeping requirements. Waterways.

Temporary Regulation

In consideration of the foregoing, the Coast Guard amends Part 100 of Title 33, Code of Federal Regulations, as follows:

PART 100—[AMENDED]

1. The authority citation for Part 100 continues to read as follows:

Authority: 33 U.S.C. 1233; 49 CFR 1.46 and 33 CFR 100.35.

2. A temporary section 100.35–T08–040 is added to read as follows:

§ 100.35–T08–040 Special Local Regulation, Ohio River at Paducah, Kentucky.

(a) *Regulated Area:* Ohio River Miles 934.5 to 936.0.

(b) *Special Local Regulation:* All persons and/or vessels not registered with the sponsors as participants or official patrol vessels are considered spectators. The ''official patrol'' consists of any Coast Guard, public, state or local law enforcement and/or sponsor

provided vessels assigned to patrol the event.

(1) No spectators shall anchor, block, loiter in, or impede the through transit of participants or official patrol vessels in the regulated area during effective dates and times, unless cleared for such entry by or through an official patrol vessel.

(2) When hailed and/or signaled by an official patrol vessel, a spectator shall come to an immediate stop. Vessels shall comply with all directions given; failure to do so may result in a citation.

(3) The Patrol Commander is empowered to control the movement of all vessels in the regulated area. The Patrol Commander may terminate the event at any time it is deemed necessary for the protections of life and/or property and can be reached on VHF–FM Channel 16 by using the call sign ''PATCOM''

(c) Dates: This section is effective at 1:30 p.m. and terminates at 3:30 p.m. on July 19, 1998.

Dated: July 7, 1998.

Fred J. Plute,

Rear Admiral, U.S. Coast Guard Commander, Eighth Coast Guard District.

[FR Doc. 98–19180 Filed 7–17–98; 8:45 am]

BILLING CODE 4910–15–M

DEPARTMENT OF TRANSPORTATION

Coast Guard

33 CFR Part 165

[CGD11–98–005]

RIN 2115–AA97

Safety/Security Zone; San Francisco Bay, San Pablo Bay, Carquinez Strait, and Suisun Bay, CA

AGENCY: Coast Guard, DOT.

ACTION: Final rule.

SUMMARY: The Coast Guard is establishing a moving safety/security zone around vessels transporting foreign research reactor spent nuclear materials on the navigable waters of San Francisco Bay, San Pablo Bay, Carquinez Strait, and Suisun Bay, CA. The zone will extend 200 yards ahead and astern, and 100 yards to each side of each vessel carrying the nuclear materials, during transit from San Francisco Main Ship Channel buoys 7 and 8 to the Weapons Support Facility Seal Beach Detachment Concord on Suisun Bay. The zone will remain in effect while the transport vessels are moored at the Weapons Support Facility Seal Beach Detachment Concord until all nuclear materials cargo operations have been completed.

The purposes of this safety/security zone are three-fold: To ensure the safety of the participant transport vessels and crew, and of all other vessels and crew in the vicinity of the participant transport vessels; to protect the environment against potential harm; and to ensure the security of the participant transport vessels, and of the property of the United States Government contained on those vessels, against sabotage or other subversive and/or disruptive acts. No persons or vessels will be allowed to enter, operate, or anchor within this zone, except as may be authorized by Commander, Eleventh Coast Guard District, or his designated representative.

DATES: This rule becomes effective July 8, 1998.

FOR FURTHER INFORMATION CONTACT: Lieutenant Commander Mark Dix, U.S. Coast Guard Marine Safety Office San Francisco Bay, at (510) 437–3073.

SUPPLEMENTARY INFORMATION:

Regulatory History

On May 7, 1998, the Coast Guard published a notice of proposed rulemaking entitled Safety/Security Zone: San Francisco Bay, San Pablo Bay, Carquinez Strait, and Suisun Bay, CA in the **Federal Register** (63 FR 25189–25191). The comment period ended July 6, 1998. The Coast Guard received no comments on the proposal. No public hearing was requested, and none was held.

Good cause exists for making this rule effective prior to publication of this Final Rule in the **Federal Register** because the shipments of spent nuclear materials necessitating promulgation of this safety/security zone may begin immediately. Consequently, shipments of spent nuclear materials might occur prior to the effective date of this regulation if the regulation does not become effective until 30 days after publication of this Final Rule in the **Federal Register**, creating hazardous, unsafe navigation conditions and serious national security concerns during the shipments.

Background and Purpose

As part of a major national security objective to further the objectives of the 1968 Treaty On Non-Proliferation of Nuclear Weapons, the United States Department of Energy (DOE) will be receiving several shipments of foreign research reactor spent nuclear fuel at the Weapons Support Facility Seal Beach Detachment Concord in Concord, CA over a period of years. As such, DOE is responsible for the shipments necessitating promulgation of this safety/security zone.

The Coast Guard is establishing a temporary moving safety/security zone around any/all vessels transporting these foreign research reactor spent nuclear materials on behalf of DOE and the United States Government on the navigable waters of San Francisco Bay, San Pablo Bay, Carquinez Strait, and Suisun Bay, CA, and at the Weapons Support Facility Seal Beach Detachment.

The Coast Guard does not anticipate that maritime traffic will be significantly impacted by the promulgation of this safety/security zone because the transit of the transport vessel(s) is expected to be expeditious, and it has been scheduled on a day and time of historically light maritime traffic, so as to maximize safety and minimize any delay or inconvenience caused by the shipment. The purposes of this safety/security zone are three-fold: (1.) Pursuant to 33 CFR 165.23, to ensure the safety of the participant transport vessel(s) and crew, and of all other vessels and crew in the vicinity of the participant transport vessel(s) (2.) pursuant to 33 CFR 165.23, to protect the environment against potential harm; and, (3.) pursuant to 33 CFR 165.33, to ensure the security of the participant transport vessel(s), and of the property of the United States Government contained on those vessels, against sabotage or other subversive and/or disruptive acts. No persons or vessels will be allowed to enter, operate, or anchor within this moving zone during transport vessel transit, including any emergency mooring or anchoring, except as may be authorized by Commander, Eleventh Coast Guard District, or his designated representative.

Discussion

The safety/security zone will extend 200 yards ahead and astern, and 100 yards to each side of each vessel carrying the nuclear materials, during transit from San Francisco Main Ship Channel buoys 7 and 8 to the Weapons Support Facility Seal Beach Detachment Concord on Suisun Bay. Once each vessel carrying the nuclear materials is safely moored, the zone will close to encompass all waters within 100 yards of each vessel and will remain so until all nuclear materials cargo handling operations have been completed. No persons or vessels will be allowed to enter, operate, or anchor within this zone, except as may be authorized by Commander, Eleventh Coast Guard District, or his designated representative.

DOE anticipates that these shipments will take place at irregular intervals for an undetermined period of years. Thus, the actual dates and times that this safety/security zone will be activated are not known by the Coast Guard at this time. The Eleventh Coast Guard District Commander will cause notice of the activation of this safety/security zone to be made by all appropriate means to effect the widest publicity among the affected segments of the public, including publication in the **Federal Register** as practicable, in accordance with the provisions of 33 CFR 165.7(a); such means of announcement may include, but are not limited to, Broadcast Notice to Mariners. The Coast Guard will also issue a Broadcast Notice to Mariners notifying the public when nuclear materials cargo handling has been completed.

Discussion of Comments

No comments were received.

Regulatory Evaluation

This regulation is not a significant regulatory action under section 3(f) of Executive Order 12866 and does not require an assessment of potential costs and benefits under section 6(a)(3) of that order. It has been exempted from review by the Office of Management and Budget under that order. It is not significant under the regulatory policies and procedures of the Department of Transportation (DOT) (44 FR 11040; February 26, 1979). The Coast Guard expects the economic impact of this regulation to be so minimal that a full Regulatory Evaluation under paragraph 10e of the regulatory policies and procedures of DOT is unnecessary. Maritime traffic will not be significantly impacted because of the expeditious nature of the transit necessitating this safety/security zone, and the limited duration of the zone during transit and cargo operations.

Small Entities

Under the Regulatory Flexibility Act (5 U.S.C. 601 *et seq*), the Coast Guard must consider whether this regulation will have a significant economic impact on a substantial number of small entities. ''Small entities'' may include small businesses and not-for-profit organizations that are not dominant in their respective fields, and governmental jurisdictions with populations less than 50,000. For the same reasons set forth in the above Regulatory Evaluation, the Coast Guard certifies under 5 U.S.C. 605(b) that this regulation is not expected to have a significant economic impact on any substantial number of entities, regardless of their size.

Assistance For Small Entities

In accordance with 213(a) of the Small Business Regulatory Enforcement Fairness Act of 1996 (Pub. L. 104–121), the Coast Guard wants to assist small entities in understanding this regulation so that they can better evaluate its effects on them and participate in the rulemaking process. If your small business or organization is affected by this rule and you have questions concerning its provisions or options for compliance, please contact LCDR Mark Dix, Coast Guard Marine Safety Office San Francisco Bay, at (510) 437–3073.

Collection of Information

This regulation contains no collection of information requirements under the Paperwork Reduction Act of 1995 (44 U.S.C. 3501 *et seq*).

Federalism

The Coast Guard has analyzed this regulation under the principles and criteria contained in Executive Order 12612 and has determined that this regulation does not have sufficient Federalism implications to warrant the preparation of a Federalism Assessment.

Environmental Assessment

The Coast Guard has considered the environmental impact of this regulation and concluded that under Chapter 2.B.2. of Commandant Instruction M16475.1C, Figure 2–1, paragraph (34), it will have no significant environmental impact and it is categorically excluded from further environmental documentation. A Categorical Exclusion Determination and Environmental Analysis Checklist is on file in the rulemaking docket, and is available for inspection at the address referenced in the paragraph entitled **FOR FURTHER INFORMATION CONTACT.**

A copy of DOE's ''Final Environmental Impact Statement on a Proposed Nuclear Weapons Nonproliferation Policy Concerning Foreign Research Reactor Spent Nuclear Fuel'' has also been placed in the rulemaking docket and is available for inspection at the address shown above in the paragraph entitled **FOR FURTHER INFORMATION CONTACT.** To request your own copy of this document, contact: Charles Head, Program Manager, Office of Spent Nuclear Fuel Management (Em–67), U.S. Department of Energy, 1000 Independence Avenue, SW, Washington, DC 20585.

Unfunded Mandates

Under the Unfunded Mandates Reform Act of 1995 (Pub. L. 104–4), the Coast Guard must consider whether this rule will result in an annual expenditure by state, local, and tribal governments, in the aggregate of $100 million (adjusted annually for inflation). If so, the Act requires that a reasonable number of regulatory alternatives be considered, and that from those alternatives, the least costly, most cost-effective, or least burdensome alternative that achieves the objective of the rule be selected.

No state, local, or tribal government entities will be effected by this rule, so this rule will not result in annual or aggregate costs of $100 million or more. Therefore, the Coast Guard is exempt from any further regulatory requirements under the Unfunded Mandates Act.

List of Subjects in 33 CFR Part 165

Harbors, Marine safety, Navigation (water), Reporting and recordkeeping requirements, Safety measures, Waterways.

Regulation

In consideration of the foregoing, Subpart F of Part 165 of Title 33, Code of Federal Regulations, is amended as follows:

PART 165—[AMENDED]

1. The authority citation for part 165 continues to read as follows:

Authority: 33 U.S.C. 1231; 50 U.S.C. 191; CFR 1.05–1(g), 6.04–1, 6.04–6 and 160.5; 49 CFR 1.46.

2. A new § 165.1115 is added to read as follows:

§ 165.1115 Safety/Security Zone: San Francisco Bay, San Pablo Bay, Carquinez Strait, and Suisun Bay, CA.

(a) *Regulated area.* The following area is established as a moving safety/security zone:

(1) All waters 200 yards ahead and astern and 100 yards to each side of every vessel transporting nuclear materials on behalf of the United States Department of Energy while such vessels transit from a line drawn between San Francisco Main Ship Channel buoys 7 and 8 (LLNR 4190 & 4195, positions 37°46.9′N, 122°35.4′W & 37°46.5′N, 122°35.2′W, respectively) until safely moored at the Weapons Support Facility Seal Beach Detachment Concord on Suisun Bay (position 38°03.3′N, 122°02.5′W). All coordinates referenced use datum: NAD 1983.

(2) All waters within 100 yards of such vessels described in paragraph (a)(1) of this section while such vessels are conducting cargo operations at the Weapons Support Facility Seal Beach Detachment Concord.

(b) *Notification*. Commander, Eleventh Coast Guard District, will cause notice of the activation of this safety/security zone to be made by all appropriate means to effect the widest publicity among the affected segments of the public, including publication in the **Federal Register** as practicable, in accordance with the provisions of 33 CFR 165.7(a); such means of announcement may include, but are not limited to, Broadcast Notice to Mariners. The Coast Guard will issue a Broadcast Notice to Mariners notifying the public when nuclear materials cargo handling has been completed.

(c) *Effective Period*. The safety/security zone will be effective commencing at the time any vessel described in paragraph (a)(1) of this section enters the zone described in paragraph (a)(1) of this section and will remain in effect until all spent nuclear materials cargo handling operations have been completed at Weapons Support Facility Seal Beach Detachment Concord.

(d) *Regulations*. The general regulations governing safety and security zones contained in both 33 CFR 165.23 in 33 CFR 165.33 apply. Entry into, transit through, or anchoring within this moving safety/security zone is prohibited unless authorized by Commander, Eleventh Coast Guard District, or his designated representative.

Dated: July 7, 1998.

R.D. Sirois,

Captain, U.S. Coast Guard, Commander, Eleventh Coast Guard District Acting.

[FR Doc. 98–19179 Filed 7–17–98; 8:45 am]

BILLING CODE 4910–15–M

ENVIRONMENTAL PROTECTION AGENCY

40 CFR Part 52

[MO 050–1050; FRL–6124–7]

Approval and Promulgation of Implementation Plans; State of Missouri

AGENCY: Environmental Protection Agency (EPA).

ACTION: Final rule.

SUMMARY: The EPA is approving new Missouri rule 10 CSR 10–2.360, ''Emission Restrictions for Bakeries,'' as a revision to the Missouri State Implementation Plan (SIP). This rule restricts volatile organic compound (VOC) emissions from large commercial bakery operations in the Kansas City ozone maintenance area.

DATES: This rule is effective on August 19, 1998.

ADDRESSES: Copies of the documents relevant to this action are available for public inspection during normal business hours at the: Environmental Protection Agency, Air Planning and Development Branch, 726 Minnesota Avenue, Kansas City, Kansas 66101; and the EPA Air & Radiation Docket and Information Center, 401 M Street, SW., Washington, DC 20460.

FOR FURTHER INFORMATION CONTACT: Joshua A. Tapp at (913) 551–7606.

SUPPLEMENTARY INFORMATION: The Clean Air Act (CAA) requires states to apply reasonably available control technology (RACT) to sources of VOCs in ozone nonattainment areas to reduce such emissions. For the Kansas City area, the Act required RACT for sources not covered by a control techniques guideline emitting more than 100 tons per year. RACT is defined as the lowest emissions limit that a particular source is capable of meeting by the application of control technology that is both reasonably available, as well as technologically and economically feasible.

Kansas City is currently an ozone maintenance area. It was redesignated to attainment on June 23, 1992, with the assumption that all existing major sources had RACT controls. Recently, the Missouri Department of Natural Resources discovered a major, uncontrolled commercial bakery located in Kansas City with a potential to emit greater than 100 tons per year of VOCs. This source sector should have been addressed prior to redesignation. However, this rule now addresses such sources consistent with the EPA's Alternative Control Technology Document on commercial bakery emission controls. Specifically, Missouri's rule requires a minimum of 80 percent VOC destruction and contains provisions addressing compliance determinations and recordkeeping. Rules such as this will aid Kansas City in its efforts to maintain air quality to meet the national ambient air quality standards. For more background information, the reader is referred to the proposal for this rulemaking published on August 5, 1996, at 61 FR 40591.

On September 3, 1996, the EPA received one comment from the American Bakers Association (ABA). The ABA opposes the capture efficiency language contained in subsection (4)(C) of the rule. The ABA's position is that bakery ovens operate under negative pressure and, therefore, should not be subject to capture efficiency requirements. The ABA further comments that if the language addressing capture efficiency in subsection (4)(C) is not changed, at a minimum the language referencing section 20 of rule 10 CSR 10–6.030 as a compliance method should be deleted so that the rule is consistent with the St. Louis bakery rule.

The EPA's response to these comments is that, as written, the rule is consistent with the Clean Air Act in that it addresses emissions from major sources of VOCs in an ozone maintenance area. The rule contains enforceable limitations, the requirements for compliance are clear, and the methods for determining compliance have been provided. Therefore, because this rule meets the minimum SIP approval criteria under the ACT, the EPA is approving it as a revision to the Missouri SIP.

In addition, the EPA does not have authority to revise language contained in a state rule. Such concerns are more appropriately conveyed at the time that the state holds a public hearing on such rules. In any event, under the Missouri rule the Director may approve an alternative compliance method, including a method which accounts for operation of a source under negative pressure, as long as such method has been approved by the EPA. Therefore, the rule provides the Director with the flexibility to address the ABA's concerns on a case-by-case basis.

This response to comments is also documented in an addendum to the Technical Support Document for this rulemaking.

I. Final Action

In this document, the EPA takes final action to approve Missouri rule 10 CSR 10–2.360, submitted on March 13, 1996, as a revision to the Missouri SIP.

Nothing in this action should be construed as permitting or allowing or establishing a precedent for any future request for revision to any SIP. Each request for revision to the SIP shall be considered separately in light of specific technical, economic, and environmental factors, and in relation to relevant statutory and regulatory requirements.

II. Administrative Requirements

A. Executive Orders 12866 and 13045

The Office of Management and Budget has exempted this regulatory action from Executive Order 12866 review.

The final rule is not subject to Executive Order 13045, entitled ''Protection of Children from Environmental Health Risks and Safety Risks,'' because it is not an

''economically significant'' action under Executive Order 12866.

B. Regulatory Flexibility

The Regulatory Flexibility Act generally requires an agency to conduct a regulatory flexibility analysis of any rule subject to notice and comment rulemaking requirements, unless the agency certifies that the rule will not have a significant economic impact on a substantial number of small entities. Small entities include small businesses, small not-for-profit enterprises, and small governmental jurisdictions. This final rule will not have a significant impact on a substantial number of small entities.

SIP approvals under section 110 and subchapter I, Part D of the CAA do not create any new requirements but simply approve requirements that the state is already imposing. Therefore, because the Federal SIP approval does not create any new requirements, I certify that this action will not have a significant economic impact on a substantial number of small entities. Moreover, due to the nature of the Federal-state relationship under the CAA, preparation of flexibility analysis would constitute Federal inquiry into the economic reasonableness of state action. The CAA forbids the EPA to base its actions concerning SIPs on such grounds (*Union Electric Co.* v. *U.S. E.P.A.*), 427 U.S. 246, 256–66 (1976); 42 U.S.C. 7410(a)(2)).

C. Unfunded Mandates

Under section 202 of the Unfunded Mandates Reform Act of 1995 (''Unfunded Mandates Act''), signed into law on March 22, 1995, the EPA must prepare a budgetary impact statement to accompany any proposed or final rule that includes a Federal mandate that may result in estimated costs to state, local, or tribal governments in the aggregate; or to the private sector, of $100 million or more. Under section 205, the EPA must select the most cost-effective and least burdensome alternative that achieves the objectives of the rule and is consistent with statutory requirements. Section 203 requires the EPA to establish a plan for informing and advising any small governments that may be significantly or uniquely impacted by the rule.

The EPA has determined that the approval action promulgated does not include a Federal mandate that may result in estimated costs of $100 million or more to either state, local, or tribal governments in the aggregate, or to the private sector. This Federal action approves preexisting requirements under state or local law, and imposes no new requirements. Accordingly, no additional costs to state, local, or tribal governments, or to the private sector, result from this action.

D. Submission to Congress and the Comptroller General

The Congressional Review Act, 5 U.S.C. 801 *et seq.*, as added by the Small Business Regulatory Enforcement Fairness Act of 1996, generally provides that before a rule may take effect, the agency promulgating the rule must submit a rule report, which includes a copy of the rule, to each House of the Congress and to the Comptroller General of the United States. The EPA will submit a report containing this rule and other required information to the U.S. Senate, the U.S. House of Representatives, and the Comptroller General of the United States prior to publication of the rule in the **Federal Register**. This rule is not a ''major rule'' as defined by 5 U.S.C. 804(2).

E. Petitions for Judicial Review

Under section 307(b)(1) of the CAA, petitions for judicial review of this action must be filed in the United States Court of Appeals for the appropriate circuit by September 18, 1998. Filing a petition for reconsideration by the Administrator of this final rule does not affect the finality of this rule for the purposes of judicial review, nor does it extend the time within which a petition for judicial review may be filed, and shall not postpone the effectiveness of such rule or action. This action may not be challenged later in proceedings to enforce its requirements. (See section 307(b)(2).)

List of Subjects in 40 CFR Part 52

Environmental protection, Air pollution control, Hydrocarbons, Incorporation by reference, Intergovernmental relations, Ozone, Reporting and recordkeeping requirements, Volatile organic compounds.

Dated: June 29, 1998

Dennis Grams, P.E.,

Regional Administrator, Region VII.

Part 52, chapter I, title 40 of the Code of Federal Regulations is amended as follows:

PART 52—[AMENDED]

1. The authority citation for part 52 continues to read as follows:

Authority: 42 U.S.C. 7401 *et seq.*

Subpart AA—Missouri

2. Section 52.1320 is amended by adding paragraph (c)(107) to read as follows:

§ 52.1320 Identification of plan.

* * * * *

(c) * * *

(107) New regulation for control of volatile organic emissions from Kansas City commercial bakeries submitted by the Missouri Department of Natural Resources March 13, 1996.

(i) Incorporation by reference.

(A) Rule 10 CSR 10–2.360 entitled ''Control of Emissions from Bakery Ovens,'' effective December 30, 1995.

[FR Doc. 98–19134 Filed 7–17–98; 8:45 am]

BILLING CODE 6560–50–P

ENVIRONMENTAL PROTECTION AGENCY

40 CFR Part 136

Guidelines Establishing Test Procedures for the Analysis of Pollutants

CFR Correction

In Title 40 of the Code of Federal Regulations, parts 136 to 149, revised as of July 1, 1997, page 26, § 136.3(e) is corrected in Table II by correcting the entry in the fourth column ''Maximum holding time'' under ''metals'' for ''Mercury'' to read ''28 days''.

BILLING CODE 1505-01-D

FEDERAL COMMUNICATIONS COMMISSION

47 CFR Part 73

Radio Broadcasting Services; Various Locations

AGENCY: Federal Communications Commission.

ACTION: Final rule.

SUMMARY: The Commission, on its own motion, editorially amends the Table of FM Allotments to specify the actual classes of channels allotted to various communities. The changes in channel classifications have been authorized in response to applications filed by licensees and permittees operating on these channels. This action is taken pursuant to *Revision of Section 73.3573(a)(1) of the Commission's Rules Concerning the Lower Classification of an FM Allotment*, 4 FCC Rcd 2413 (1989), and the *Amendment of the Commission's Rules to permit FM*

Channel and Class Modifications [Upgrades] by Applications, 8 FCC Rcd 4735 (1993).

EFFECTIVE DATE: July 20, 1998.

FOR FURTHER INFORMATION CONTACT: Kathleen Scheuerle, Mass Media Bureau, (202) 418–2180.

SUPPLEMENTARY INFORMATION: This is a summary of the Commission's Report and Order, adopted July 1, 1998, and released July 10, 1998. The full text of this Commission decision is available for inspection and copying during normal business hours in the Commission's Reference Center (Room 239), 1919 M Street, NW., Washington, DC. The complete text of this decision may also be purchased from the Commission's copy contractors, International Transcription Service, Inc., 1231 20th Street, NW, Washington, DC. 20036, (202) 857–3800, facsimile (202) 857–3805.

List of Subjects in 47 CFR PART 73

Radio broadcasting.

Part 73 of title 47 of the Code of Federal Regulations is amended as follows:

47 CFR PART 73—[AMENDED]

1. The authority citation for part 73 continues to read as follows:

Authority: 47 U.S.C. 154, 303, 334 and 336.

§ 73.202 [Amended]

2. Section 73.202(b), the Table of FM Allotments under Florida, is amended by removing Channel 288A and adding Channel 288C2 at Apalachicola, by removing Channel 253C and adding Channel 253C1 at Crystal River, by removing Channel 249A and adding Channel 249C3 at Punta Rassa, and by removing Channel 245A and adding Channel 245C3 at Tavernier.

3. Section 73.202(b), the Table of FM Allotments under Georgia, is amended by removing Channel 286C3 and adding Channel 286C2 at Blackshear.

4. Section 73.202(b), the Table of FM Allotments under Idaho, is amended by removing Channel 252A and adding Channel 252C1 at McCall.

5. Section 73.202(b), the Table of FM Allotments under Kansas, is amended by removing Channel 277C1 and adding Channel 277C at Hays.

6. Section 73.202(b), the Table of FM Allotments under Louisiana, is amended by removing Channel 264A and adding Channel 264C3 at Natchitoches.

7. Section 73.202(b), the Table of FM Allotments under Missouri, is amended by removing Channel 259A and adding Channel 259C3 at Neosho.

8. Section 73.202(b), the Table of FM Allotments under New Mexico, is amended by removing Channel 268A and adding Channel 268C1 at Gallup.

9. Section 73.202(b), the Table of FM Allotments under Oregon, is amended by removing Channel 233A and adding Channel 233C at Canyon City.

10. Section 73.202(b), the Table of FM Allotments under Texas, is amended by removing Channel 238C and adding Channel 238C1 at Austin, and by removing Channel 238C and adding Channel 239C2 at Waco.

Federal Communications Commission.

John A. Karousos,

Chief, Allocations Branch, Policy and Rules Division, Mass Media Bureau.

[FR Doc. 98–19302 Filed 7–17–98; 8:45 am]

BILLING CODE 6712–01–F

FEDERAL COMMUNICATIONS COMMISSION

47 CFR Part 73

[MM Docket No. 97–239; RM–9195 and RM–9237]

Radio Broadcasting Services; Horseshoe Beach, FL and Otter Creek, FL

AGENCY: Federal Communications Commission.

ACTION: Final rule.

SUMMARY: Action in this document allots Channel 240A to Otter Creek, Florida, in response to a petition filed by Tony Downes. *See* 62 FR 66323, December 18, 1997. The coordinates for Channel 240A at Otter Creek, Florida, are 29–16–52 and 82–51–42. There is a site restriction 9.8 kilometers (6.1 miles) southwest of the community. In response to the counterproposal filed by Dixie County Broadcasters, we will allot Channel 234C3 to Horseshoe Beach at coordinates 29–26–28 and 83–17–15. With this action, this proceeding is terminated. A filing window for Channel 234C3 at Horseshoe Beach, Florida, and channel 240A at Otter Creek, Florida, will not be opened at this time. Instead, the issue of opening a filing window for these channels will be addressed by the Commission in a subsequent order.

EFFECTIVE DATE: August 24, 1998.

FOR FURTHER INFORMATION CONTACT: Kathleen Scheuerle, Mass Media Bureau, (202) 418–2180.

SUPPLEMENTARY INFORMATION: This is a summary of the Commission's Report and Order, MM Docket No. 97–239, adopted July 1, 1998, and released July 10, 1998. The full text of this Commission decision is available for inspection and copying during normal business hours in the Commission's Reference Center (Room 239), 1919 M Street, NW, Washington, DC. The complete text of this decision may also be purchased from the Commission's copy contractors, International Transcription Services, Inc., 1231 20th Street, NW., Washington, DC. 20036, (202) 857–3800, facsimile (202) 857–3805.

List of Subjects in 47 CFR Part 73

Radio broadcasting.

Part 73 of title 47 of the Code of Federal Regulations is amended as follows:

PART 73—[AMENDED]

1. The authority citation for Part 73 continues to read as follows:

Authority: 47 U.S.C. 154, 303, 334, 336.

§ 73.202 [Amended]

2. Section 73.202(b), the Table of FM Allotments under Florida, is amended by adding Horseshoe Beach and Channel 234C3 and Otter Creek and Channel 240A.

Federal Communications Commission.

John A. Karousos,

Chief, Allocations Branch, Policy and Rules Division, Mass Media Bureau.

[FR Doc. 98–19301 Filed 7–17–98; 8:45 am]

BILLING CODE 6712–01–P

DEPARTMENT OF TRANSPORTATION

Research and Special Programs Administration

49 CFR Parts 190, 191, 192, 193, 195, and 199

[Docket No. RSPA–97–2251; Amdt Nos. 190–8; 191–13; 192–84; 193–15; 194–2; 195–61; 198–3; 199–17]

RIN 2137–AD03

Pipeline Safety: Periodic Updates to Pipeline Safety Regulations (1997)

AGENCY: Research and Special Programs Administration (RSPA), DOT.

ACTION: Removal of direct final rule amendment.

SUMMARY: This document removes an amendment in a direct final rule titled, ''Periodic Updates to the Pipeline Safety Regulations'' (63 FR 7721), published on February 17, 1998, and restores the regulatory text that existed prior to the direct final rule. The final rule updated references to voluntary specifications

and standards incorporated by reference, and made various clarifications and grammatical corrections. The other amendments made by the direct final rule became effective on May 4, 1998.

DATES: The removal of the amendment is effective July 20, 1998.

ADDRESSES: Comments should be sent to the Dockets Facility, U.S. Department of Transportation, Plaza 401, 400 Seventh Street, SW, Washington, DC 20590–0001. Comments should identify the docket number (RSPA–97–2251). Persons should submit the original document and one (1) copy. Persons wishing to receive confirmation of receipt of their comments must include a self-addressed, stamped postcard. The Dockets Facility is located on the plaza level of the Nassif Building in Room Number 401, 400 Seventh Street, SW, Washington, DC. The Dockets Facility is open from 10:00 a.m. to 5:00 p.m., Monday through Friday, except on Federal holidays when the facility is closed.

FOR FURTHER INFORMATION CONTACT: Eben M. Wyman, (202) 366–0918, or by e-mail (eben.wyman@rspa.dot.gov), regarding the subject matter of this Notice; or the Dockets Unit, (202) 366–4453, for copies of this final rule or other material in the docket. Further information can be obtained by accessing OPS' Internet Home Page at: ops.dot.gov.

SUPPLEMENTARY INFORMATION:

Partial Withdrawal

Under Clarifications of the direct final rule, § 192.614(c)(5) requires operators to ''Provide for temporary marking of buried pipelines in the area of excavation activity before, as far as practical, the activity begins.'' RSPA believed that this requirement could be confusing to the reader in terms of interpreting the meaning of ''as far as practical.'' Therefore, RSPA amended the paragraph to require temporary marking of buried pipelines before excavation activities begins ''except in emergency situations.''

Based on a comment to this clarification, RSPA is removing this change from this direct final rule. The comment was based on the interpretation of the phrase ''as far as practical.'' RSPA did not mean to distort the language of the regulation, only to clarify that operators would not be responsible for marking in an emergency situation. However, based on feedback from the pipeline industry and other regulatory parties within RSPA, it was determined that the original language better served the reader of the regulation. RSPA plans to issue an interpretation of the language in § 192.614 to clarify its meaning.

PART 193—[AMENDED]

1. The authority citation for Part 192 continues to read as follows:

Authority: 49 U.S.C. 5103, 60102, 60104, 60108, 60109, 60110, 60113, 60118; and 49 CFR 1.53.

2. Paragraph (c)(5) of § 192.614 is revised to read as follows:

§ 192.614 Damage prevention program.

* * * * *

(c) * * *

(5) Provide for temporary marking of buried pipelines in the area of excavation activity before, as far as practical, the activity begins.

* * * * *

Issued in Washington, DC, on July 10, 1998.

Kelley S. Coyner,

Deputy Administrator.

[FR Doc. 98–18910 Filed 7–17–98; 8:45 am]

BILLING CODE 4910–60–P

DEPARTMENT OF TRANSPORTATION

Research and Special Programs Administration

49 CFR Parts 190 and 192

[Docket No. RSPA–97–2251; Amdt Nos. 190–8; 191–13; 192–84; 193–15; 194–2; 195–61; 198–3; 199–17]

RIN 2137–AD03

Pipeline Safety: Periodic Updates to Pipeline Safety Regulations (1997)

AGENCY: Research and Special Programs Administration (RSPA), DOT.

ACTION: Corrections to direct final rule.

SUMMARY: This document makes minor corrections to a direct final rule titled, ''Periodic Updates to the Pipeline Safety Regulations'' (63 FR 7721), published on February 17, 1998. The final rule updated references to voluntary specifications and standards incorporated by reference, and made various clarifications and grammatical corrections.

DATES: This correction is effective July 20, 1998.

FOR FURTHER INFORMATION CONTACT: Eben M. Wyman, (202) 366–0918, or by e-mail (eben.wyman@rspa.dot.gov), regarding the subject matter of this Notice; or the Dockets Unit, (202) 366–4453, for copies of this final rule or other material in the docket. Further information can be obtained by accessing OPS' Internet Home Page at: ops.dot.gov.

SUPPLEMENTARY INFORMATION:

Need for Corrections

1. The direct final rule incorrectly listed the amendment numbers for Part 190 and Part 192 at the beginning of the direct final rule. The correct amendment numbers are 190–8, and 192–84.

2. In updating the American Society for Testing and Materials (ASTM) Designation 2513, the direct final rule inadvertently removed the reference to the ASTM 2513–87 edition for § 192.63(a)(1). This document corrects this reference to reflect the appropriate standard, ASTM Designation D 2513 ''Standard Specification of Thermoplastic Gas Pressure Pipe, Tubing and Fittings'' (D 2513–87 edition for § 192.63(a)(1), otherwise D 2513–96a).

RSPA regrets any confusion this error may have caused.

Correction of Publication

Accordingly, the publication on February 17, 1998, of the final rule (63 FR 7721) is corrected as follows:

1. On page 7721, in the first column, in the docket number, amendment number ''190–7'' is corrected to read ''190–8'' and amendment number ''172–83'' is corrected to read ''192–84.''

2. On page 7723, in the second column, under paragraph C (10), the words ''D 2513–87 edition for § 192.63(a)(1), otherwise'' are added before ''D 2513–96a.''

Issued in Washington, DC, on July 10, 1998.

Kelley S. Coyner,

Deputy Administrator.

[FR Doc. 98–18911 Filed 7–17–98; 8:45 am]

BILLING CODE 4910–60–U

DEPARTMENT OF COMMERCE

National Oceanic and Atmospheric Administration

50 CFR Part 679

[Docket No. 971208297–8054–02; I.D. 071398D]

Fisheries of the Exclusive Economic Zone Off Alaska; Pacific Ocean Perch in the Eastern Regulatory Area of the Gulf of Alaska

AGENCY: National Marine Fisheries Service (NMFS), National Oceanic and Atmospheric Administration (NOAA), Commerce.

ACTION: Closure.

SUMMARY: NMFS is prohibiting directed fishing for Pacific ocean perch in the Eastern Regulatory Area of the Gulf of Alaska (GOA). This action is necessary to prevent exceeding the 1998 total allowable catch (TAC) of Pacific ocean perch in this area.

DATES: Effective 1200 hrs, Alaska local time (A.l.t.), July 14, 1998, until 2400 hrs, A.l.t., December 31, 1998.

FOR FURTHER INFORMATION CONTACT: Mary Furuness, 907–586–7228.

SUPPLEMENTARY INFORMATION: NMFS manages the groundfish fishery in the GOA exclusive economic zone according to the Fishery Management Plan for Groundfish of the Gulf of Alaska (FMP) prepared by the North Pacific Fishery Management Council under authority of the Magnuson-Stevens Fishery Conservation and Management Act. Regulations governing fishing by U.S. vessels in accordance with the FMP appear at subpart H of 50 CFR part 600 and 50 CFR part 679.

In accordance with § 679.20(c)(3)(ii), the Final 1998 Harvest Specifications of Groundfish for the GOA (63 FR 12027, March 12, 1998) established the amount of the 1998 TAC of Pacific ocean perch in the Eastern Regulatory Area of the Gulf of Alaska as 2,366 metric tons (mt). The directed fishery for Pacific ocean perch in the Eastern Regulatory Area was closed under § 679.20(d)(1)(iii) on July 6, 1998, (63 FR 37071, July 9, 1998) and reopened on July 12, 1998, (to be published on July 16, 1998).

In accordance with § 679.20(d)(1)(i), the Administrator, Alaska Region, NMFS (Regional Administrator), has determined that the 1998 TAC for Pacific ocean perch will be reached. Therefore, the Regional Administrator is establishing a directed fishing allowance of 2,116 mt, and is setting aside the remaining 250 mt as bycatch to support other anticipated groundfish fisheries. In accordance with § 679.20(d)(1)(iii), the Regional Administrator finds that this directed fishing allowance has been reached. Consequently, NMFS is prohibiting directed fishing for Pacific ocean perch in the Eastern Regulatory Area of the GOA.

Maximum retainable bycatch amounts may be found in the regulations at § 679.20(e) and (f).

Classification

This action responds to the best available information recently obtained from the fishery. It must be implemented immediately to prevent overharvesting the 1998 TAC of Pacific ocean perch for the Eastern Regulatory Area of the GOA. A delay in the effective date is impracticable and contrary to the public interest. Further delay would only result in overharvest. NMFS finds for good cause that the implementation of this action should not be delayed for 30 days. Accordingly, under 5 U.S.C. 553(d), a delay in the effective date is hereby waived.

This action is required by 50 CFR 679.20 and is exempt from review under E.O. 12866.

Authority: 16 U.S.C. 1801 *et seq.*

Dated: July 14, 1998.

Bruce C. Morehead,

Acting Director, Office of Sustainable Fisheries, National Marine Fisheries Service.

[FR Doc. 98–19162 Filed 7–14–98; 4:04 pm]

BILLING CODE 3510–22–F

DEPARTMENT OF COMMERCE

National Oceanic and Atmospheric Administration

50 CFR Part 679

[Docket No. 971208297–8054–02; I.D. 071398C]

Fisheries of the Exclusive Economic Zone Off Alaska; Northern Rockfish in the Central Regulatory Area of the Gulf of Alaska

AGENCY: National Marine Fisheries Service (NMFS), National Oceanic and Atmospheric Administration (NOAA), Commerce.

ACTION: Closure.

SUMMARY: NMFS is prohibiting directed fishing for northern rockfish in the Central Regulatory Area of the Gulf of Alaska (GOA). This action is necessary to prevent exceeding the 1998 total allowable catch (TAC) of northern rockfish in this area.

DATES: Effective 1200 hrs, Alaska local time (A.l.t.), July 14, 1998, until 2400 hrs, A.l.t., December 31, 1998.

FOR FURTHER INFORMATION CONTACT: Thomas Pearson, 907–486-6919.

SUPPLEMENTARY INFORMATION: The groundfish fishery in the GOA exclusive economic zone is managed by NMFS according to the Fishery Management Plan for Groundfish of the Gulf of Alaska (FMP) prepared by the North Pacific Fishery Management Council under authority of the Magnuson-Stevens Fishery Conservation and Management Act. Fishing by U.S. vessels is governed by regulations implementing the FMP at subpart H of 50 CFR part 600 and 50 CFR part 679.

The amount of the 1998 TAC of northern rockfish in the Central Regulatory Area of the Gulf of Alaska was established by the Final 1998 Harvest Specifications of Groundfish for the GOA (63 FR 12027, March 12, 1998) as 4,150 metric tons (mt), determined in accordance with § 679.20(c)(3)(ii).

In accordance with § 679.20(d)(1)(i), the Administrator, Alaska Region, NMFS (Regional Administrator), has determined that the 1998 TAC for northern rockfish will be reached. Therefore, the Regional Administrator is establishing a directed fishing allowance of 3,650 mt, and is setting aside the remaining 500 mt as bycatch to support other anticipated groundfish fisheries. In accordance with § 679.20(d)(1)(iii), the Regional Administrator finds that this directed fishing allowance has been reached. Consequently, NMFS is prohibiting directed fishing for northern rockfish in the Central Regulatory Area.

Maximum retainable bycatch amounts may be found in the regulations at § 679.20(e) and (f).

Classification

This action responds to the best available information recently obtained from the fishery. It must be implemented immediately to prevent overharvesting the 1998 TAC of northern rockfish for the Central Regulatory Area of the GOA. A delay in the effective date is impracticable and contrary to the public interest. Further delay would only result in overharvest. NMFS finds for good cause that the implementation of this action should not be delayed for 30 days. Accordingly, under 5 U.S.C. 553(d), a delay in the effective date is hereby waived.

This action is required by 50 CFR 679.20 and is exempt from review under E.O. 12866.

Authority: 16 U.S.C. 1801 *et seq.*

Dated: July 14, 1998.

Bruce C. Morehead,

Acting Director, Office of Sustainable Fisheries, National Marine Fisheries Service.

[FR Doc. 98–19161 Filed 7–14–98; 4:04 pm]

BILLING CODE 3510–22–F

DEPARTMENT OF COMMERCE

National Oceanic and Atmospheric Administration

50 CFR Part 679

[Docket No. 971208297–8054–02; I.D. 071398E]

Fisheries of the Exclusive Economic Zone Off Alaska; Pacific Ocean Perch in the Central Regulatory Area of the Gulf of Alaska

AGENCY: National Marine Fisheries Service (NMFS), National Oceanic and Atmospheric Administration (NOAA), Commerce.

ACTION: Closure.

SUMMARY: NMFS is prohibiting directed fishing for Pacific ocean perch in the Central Regulatory Area of the Gulf of Alaska (GOA). This action is necessary to prevent exceeding the 1998 total allowable catch (TAC) of Pacific ocean perch in this area.

DATES: Effective 1200 hrs, Alaska local time (A.l.t.), July 14, 1998, until 2400 hrs, A.l.t., December 31, 1998.

FOR FURTHER INFORMATION CONTACT: Mary Furuness, 907–486-6919.

SUPPLEMENTARY INFORMATION: NMFS manages the groundfish fishery in the GOA exclusive economic zone according to the Fishery Management Plan for Groundfish of the Gulf of Alaska (FMP) prepared by the North Pacific Fishery Management Council under authority of the Magnuson-Stevens Fishery Conservation and Management Act. Regulations governing fishing by U.S. vessels in accordance with the FMP appear at subpart H of 50 CFR part 600 and 50 CFR part 679.

In accordance with § 679.20(c)(3)(ii), the Final 1998 Harvest Specifications of Groundfish for the GOA (63 FR 12027, March 12, 1998) established the amount of the 1998 TAC of Pacific ocean perch in the Central Regulatory Area of the Gulf of Alaska as 6,600 metric tons (mt). The directed fishery for Pacific ocean perch in the Central Regulatory Area was closed under § 679.20(d)(1)(iii) on July 6, 1998, (63 FR 37071, July 9, 1998) and reopened on July 12, 1998, (to be published on July 16, 1998).

In accordance with § 679.20(d)(1)(i), the Administrator, Alaska Region, NMFS (Regional Administrator), has determined that the 1998 TAC for Pacific ocean perch will be reached. Therefore, the Regional Administrator is establishing a directed fishing allowance of 5,600 mt, and is setting aside the remaining 1,000 mt as bycatch to support other anticipated groundfish fisheries. In accordance with § 679.20(d)(1)(iii), the Regional Administrator finds that this directed fishing allowance has been reached. Consequently, NMFS is prohibiting directed fishing for Pacific ocean perch in the Central Regulatory Area of the GOA.

Maximum retainable bycatch amounts may be found in the regulations at § 679.20(e) and (f).

Classification

This action responds to the best available information recently obtained from the fishery. It must be implemented immediately to prevent overharvesting the 1998 TAC of Pacific ocean perch for the Central Regulatory Area of the GOA. A delay in the effective date is impracticable and contrary to the public interest. Further delay would only result in overharvest. NMFS finds for good cause that the implementation of this action should not be delayed for 30 days. Accordingly, under 5 U.S.C. 553(d), a delay in the effective date is hereby waived.

This action is required by 50 CFR 679.20 and is exempt from review under E.O. 12866.

Authority: 16 U.S.C. 1801 *et seq.*

Dated: July 14, 1998.

Bruce C. Morehead,

Acting Director, Office of Sustainable Fisheries, National Marine Fisheries Service.

[FR Doc. 98–19160 Filed 7–14–98; 4:04 pm]

BILLING CODE 3510–22–F

Proposed Rules

Federal Register
Vol. 63, No. 138
Monday, July 20, 1998

This section of the FEDERAL REGISTER contains notices to the public of the proposed issuance of rules and regulations. The purpose of these notices is to give interested persons an opportunity to participate in the rule making prior to the adoption of the final rules.

DEPARTMENT OF AGRICULTURE

Federal Crop Insurance Corporation

7 CFR Part 457

Common Crop Insurance Regulations; Guaranteed Production Plan of Fresh Market Tomato Crop Insurance Provisions

AGENCY: Federal Crop Insurance Corporation, USDA.

ACTION: Proposed rule.

SUMMARY: The Federal Crop Insurance Corporation (FCIC) proposes to amend the Guaranteed Production Plan of Fresh Market Tomato Crop Insurance Provisions to change the calendar date for the end of the insurance period.

DATES: Written comments and opinions on this proposed rule will be accepted until close of business August 19, 1998 and will be considered when the rule is to be made final.

ADDRESSES: Interested persons are invited to submit written comments to the Director, Product Development Division, Federal Crop Insurance Corporation, United States Department of Agriculture, 9435 Holmes Road, Kansas City, MO 64131. A copy of each response will be available for public inspection and copying from 7:00 a.m. to 4:30 p.m., CDT, Monday through Friday, except holidays, at the above address.

FOR FURTHER INFORMATION CONTACT: Louise Narber, Insurance Management Specialist, Research and Development, Product Development Division, Federal Crop Insurance Corporation, at the Kansas City, MO, address listed above, telephone (816) 926–7730.

SUPPLEMENTARY INFORMATION:

Executive Order 12866

This rule has been determined to be exempt for the purposes of Executive Order 12866 and, therefore, has not been reviewed by the Office of Management and Budget (OMB).

Paperwork Reduction Act of 1995

Under the provisions of the Paperwork Reduction Act of 1995 (44 U.S.C. chapter 35) there are no information collection requirements contained in this rule.

Unfunded Mandates Reform Act of 1995

Title II of the Unfunded Mandates Reform of 1995 (UMRA) establishes requirements for Federal agencies to assess the effects of their regulatory actions on State, local, and tribal governments and the private sector. This rule contains no Federal mandates (under the regulatory provisions of title II of UMRA) for State, local, and tribal governments or the private sector. Therefore, this rule is not subject to the requirements of sections 202 and 205 of UMRA.

Executive Order 12612

It has been determined under section 6(a) of Executive Order No. 12612, Federalism, that this rule does not have sufficient federalism implications to warrant the preparation of a Federalism Assessment. The provisions contained in this rule will not have a substantial direct effect on States or their political subdivisions or on the distribution of power and responsibilities among the various levels of government.

Regulatory Flexibility Act

This regulation will not have a significant economic impact on a substantial number of small entities. New provisions included in this rule will not impact small entities to a greater extent than large entities. The amount of work required of the insurance companies delivering and servicing these policies will not increase from the amount of work currently required. Therefore, this action is determined to be exempt from the provisions of the Regulatory Flexibility Act (5 U.S.C. 605) and no Regulatory Flexibility Analysis was prepared.

Federal Assistance Program

This program is listed in the Catalog of Federal Domestic Assistance under No. 10.450.

Executive Order 12372

This program is not subject to the provisions of Executive Order 12372 which require intergovernmental consultation with State and local officials. See the Notice related to 7 CFR part 3015, subpart V, published at 48 FR 29115, June 24, 1983.

Executive Order 12988

This proposed rule has been reviewed in accordance with Executive Order 12988 on civil justice reform. The provisions of this rule will not have a retroactive effect. The provisions of this rule will preempt State and local laws to the extent such State and local laws are inconsistent herewith. The administrative appeal provisions published at 7 CFR part 11 must be exhausted before any action for judicial review of any determination made by FCIC may be brought.

Environmental Evaluation

This action is not expected to have a significant economic impact on the quality of the human environment, health, and safety. Therefore, neither an Environmental Assessment nor an Environmental Impact Statement is needed.

Background

FCIC proposes to amend the Common Crop Insurance Regulations (7 CFR part 457) by revising 7 CFR 457.128 effective for the 1999 and succeeding crop years. The only change to the provisions for insuring guaranteed production plan of fresh market tomatoes is to amend section 10(b)(7) to change the calendar date for the end of the insurance period for certain states. The end of the insurance period for Delaware, Maryland, New Jersey, North Carolina, and Virginia will be changed from September 20 to October 15 of the crop year. The end of the insurance period for Florida, Georgia, and South Carolina will be changed from September 20 to November 10 of the crop year. A September 20 ending date creates an insurance period that is too short in these states. Under the current crop provisions, if the crop is planted during the fall planting period in accordance with the Special Provisions in effect for the 1999 crop year, the crop will not reach maturity before the end of the insurance period. The proposed change in the dates for the end of the insurance period will allow for insurance coverage from the time of planting until maturity of the crop.

List of Subjects in 7 CFR Part 457

Crop insurance, Tomatoes.

Proposed Rule

Accordingly, as set forth in the preamble, the Federal Crop Insurance Corporation, proposes to amend 7 CFR part 457 as follows:

PART 457—COMMON CROP INSURANCE REGULATIONS; REGULATIONS FOR THE 1998 AND SUBSEQUENT CONTRACT YEARS

1. The authority citation for 7 CFR part 457 continues to read as follows:

Authority: 7 U.S.C. 1506(l), 1506(p).

2. In § 457.128 revise section 10(b)(7) to read as follows:

§ 457.128 Guaranteed Production Plan of Fresh Market Tomato Crop Insurance Provisions.

10. Insurance Period.

* * * * *

(b) * * *

(7) October 15 of the crop year in Delaware, Maryland, New Jersey, North Carolina, and Virginia; October 31 of the crop year in California; November 10 of the crop year in Florida, Georgia, and South Carolina; and September 20 of the crop year in all other states.

Signed in Washington, DC, on July 13, 1998.

Kenneth D. Ackerman,

Manager, Federal Crop Insurance Corporation.

[FR Doc. 98–19245 Filed 7–17–98; 8:45 am]

BILLING CODE 3410–08–P

DEPARTMENT OF HEALTH AND HUMAN SERVICES

Food and Drug Administration

21 CFR Part 341

[Docket No. 76N–052T]

RIN 0910–AA01

Cold, Cough, Allergy, Bronchodilator, and Antiasthmatic Drug Products for Over-the-Counter Human Use; Proposed Amendment of Final Monograph for OTC Antitussive Drug Products

AGENCY: Food and Drug Administration, HHS.

ACTION: Notice of proposed rulemaking.

SUMMARY: The Food and Drug Administration (FDA) is issuing a notice of proposed rulemaking that would amend the final monograph for over-the-counter (OTC) antitussive drug products (drug products that relieve cough) to revise the labeling warnings and directions for topical/inhalant products containing the active ingredients camphor and/or menthol. New information indicates that use of these drug products near an open flame, in hot water, or in a microwave oven can cause the products to catch on fire and cause serious burns to the user. Therefore, the agency is proposing warnings and directions for safer use of these drug products by informing consumers not to expose the products to flame, hot water, or a microwave oven. This proposal is part of the ongoing review of OTC drug products conducted by FDA.

DATES: Submit written comments by October 19, 1998; written comments on the agency's economic impact determination by October 19, 1998. FDA is proposing that any final rule that may issue based on this proposal become effective 12 months after its date of publication in the **Federal Register**.

ADDRESSES: Submit written comments to the Dockets Management Branch (HFA–305), Food and Drug Administration, 5630 Fishers Lane, rm. 1061, Rockville, MD 20852.

FOR FURTHER INFORMATION CONTACT: Elizabeth A. Ryland, Center for Drug Evaluation and Research (HFD–560), Food and Drug Administration, 5600 Fishers Lane, Rockville, MD 20857, 301–827–2222.

SUPPLEMENTARY INFORMATION:

I. Background

In the **Federal Register** of September 9, 1976 (41 FR 38312 at 38343), the Advisory Review Panel on OTC Cold, Cough, Allergy, Bronchodilator, and Antiasthmatic Drug Products (the Panel) recommended that the single ingredients camphor and menthol for topical/inhalant antitussive use be classified in Category III (available data are insufficient to classify as safe and effective, and further testing is required). The Panel based its recommendations on a lack of effectiveness data, but determined that these products are safe (41 FR 38312 at 38344 and 38349 to 38352). The Panel was not aware of and did not discuss any information concerning possible safety hazards occurring when these products are placed near a flame, into containers of hot water, or in a microwave oven. The Panel recommended the following directions for topical/inhalant use for camphor and menthol:

* * * 1 tablespoonful of solution per quart of water is added directly to the water in a hot steam vaporizer, bowl, or washbasin; or 2 teaspoonfuls of solution per pint of water are added to an open container of boiling water. Breathe in vapors during the period of medicated steam generation. May be repeated 3 times daily.

In the final monograph for OTC antitussive drug products (52 FR 30042 at 30045 to 30046, August 12, 1987), the agency provided the following directions in § 341.74(d)(2)(i) and (d)(2)(ii) (21 CFR 341.74(d)(2)(i) and (d)(2)(ii)) for products containing the single ingredient camphor or menthol for ointment vehicle use based on additional clinical studies that supported effectiveness:

* * * Adults and children 2 to under 12 years of age: Rub on the throat and chest as a thick layer. The area of application may be covered with a warm, dry cloth if desired. However, clothing should be left loose about the throat and chest to help the vapors rise to reach the nose and mouth. Applications may be repeated up to three times daily or as directed by a doctor. Children under 2 years of age: consult a doctor.

For products containing the single ingredient camphor or menthol for steam inhalation use, the agency provided the following directions in § 341.74(d)(2)(iv) and (d)(2)(v), based on additional clinical studies that supported effectiveness:

* * * Adults and children 2 to under 12 years of age: Add 1 tablespoonful of solution, for each quart of water, directly to the water in a hot steam vaporizer, bowl, or wash basin; or add 1½ teaspoonsful of solution, for each pint of water, to an open container of boiling water. Breathe in the medicated vapors. May be repeated up to three times daily or as directed by a doctor. Children under 2 years of age: consult a doctor.

When the final monograph was published, the agency was not aware of safety problems occurring when products containing camphor and/or menthol are added to hot water. Since that time, the agency has received new information (Refs. 1, 2, and 3) that indicates that the current warnings and directions may not be adequate and that safety concerns (e.g., burns caused by flashing) could arise if these products are heated near an open flame, in a container of hot water, or in a microwave oven. From 1983 to mid-1997, 34 fire-related events from usage of antitussive drug products containing camphor and menthol were reported (Refs. 2 and 3). Twenty-one fire-related events concerned a combination of camphor and menthol in an ointment vehicle. This product when added to hot water in a container on the stove, or when added to water and heated in a microwave oven, caused flashing and severe burns. One of the 21 events involved adding the product to hot water in a vaporizer. An additional 11 events concerned heating products that were combinations of camphor and menthol in an alcohol-based solution. These products, like the products in the ointment vehicles, also caused flashing and burns when placed in hot water or

heated in a microwave oven. For example, a product flashed from the top of its container when it was opened close to the gas stove where water had been heated, but the gas flame had been extinguished. In still another fire-related event (the 33d event), the alcohol-based solution product was poured over lava rocks in a sauna. The product ignited, caught the consumer's bathrobe on fire, and caused burns over 65 percent of her body. The last reported fire-related event involved the ointment product and the alcohol-based product added to water and heated together resulting in flashing and burns. No fire-related events were reported when these products were added to cold water in a hot steam vaporizer and then heated.

In all 34 reported events, flashing occurred; in 5 events, the flashing caused first and second degree burns to the face, eyes, chest, shoulders, arms, and/or hands. In some instances, these burns may have caused permanent scarring or reduced vision. Some consumers treated themselves at home and others went to a physician's office, a clinic, a medical center, or an emergency room for treatment. One case required hospitalization.

References

(1) Food and Drug Administration Drug Product Reporting System, dated May 31, 1995, in OTC Vol. 04TFMA, Docket No. 76N–052T, Dockets Management Branch.

(2) MEDWATCH: Adverse Event Reports dated 1983 to 1995 in OTC Vol. 04TFMA, Docket No. 76N–052T, Dockets Management Branch.

(3) MEDWATCH: Adverse Event Reports dated 1995 to 1997 in OTC Vol. 04TFMA, Docket No. 76N–052T, Dockets Management Branch.

II. The Agency's Tentative Conclusions and Proposal

The agency tentatively concludes that the case reports raise safety concerns that could be alleviated by providing consumers with additional warnings and directions for topical/inhalant OTC antitussive drug products that contain camphor and/or menthol. The agency also notes that the labeling on one manufacturer's currently marketed products (containing camphor and menthol) (Ref. 3) is similar to the labeling proposed in this document. The agency believes that consumers need to be informed not to expose these products to flame or a microwave oven, not to place the products in any container in which water is being heated, and to add to cool water when using a hot steam vaporizer. Accordingly, the agency is proposing to amend the final monograph for OTC antitussive drug products to expand the warnings against possible flammability or combustibility and a precaution to keep them away from fire or flame. Labeling may also tell consumers to close caps tightly and store containers at room temperature away from heat.

The following information shall appear on any labeling that contains warnings and shall appear after the subheader ''Do Not Use:'' ''near an open flame'', ''by adding to hot water'', ''in a microwave oven'', or ''in a container in which water is being heated, except when adding to cold water in only a hot steam vaporizer''.

Additionally, the agency is proposing to amend the final monograph for OTC antitussive drug products to shorten and simplify the directions in § 341.74(d)(2)(i), (d)(2)(ii), (d)(2)(iv), and (d)(2)(v) for products containing camphor or menthol for topical/inhalation use. Further, the agency is proposing to add the following statements at the end of the directions: ''See important warnings about not using near a flame, in hot water, or in a microwave oven. Improper use may cause the mixture to splatter and cause burns.'' (Last two sentences to be highlighted in boldface type or contrasting color.)

The agency is also proposing to add an additional revision to the directions in § 341.74(d)(2)(iv) and (d)(2)(v) for products containing camphor or menthol for steam inhalation. The proposed revised directions inform users to add the solution directly to cold water in only a hot steam vaporizer. All suggestions to use the product in any other container have been deleted. This part of the proposed revised directions reads as follows:

Adults and children 2 to under 12 years of age: Add 1 tablespoonful of solution, for each quart of water, or add 1½ teaspoonsful of solution, for each pint of water, directly to cold water in only a hot steam vaporizer. Breathe in the medicated vapors. Use up to three times daily or as directed by a doctor. Children under 2 years of age: Consult a doctor.

The agency is inviting comment on the specific wording of these warnings and directions, and the best way to convey this information to persons using these drug products.

III. Effective Date

The agency is proposing that these new warnings and directions become effective 12 months after the date of publication of a final rule in the **Federal Register**. The agency believes that the 12-month effective date is needed because this period of implementation would allow many manufacturers to coordinate this change with routinely scheduled label printing and/or revisions as well as the new OTC drug product labeling format proposed in the **Federal Register** of February 27, 1997 (62 FR 9024). The agency encourages manufacturers of OTC antitussive drug products to voluntarily implement this labeling as of the date of publication of this proposal because of the potential for safety problems. Manufacturers, however, should be aware of the possibility that FDA may change the wording of the warnings and/or directions as a result of comments filed in response to this proposal. Because FDA is encouraging that the proposed warnings and directions be used on a voluntary basis at this time, the agency advises that manufacturers will be given ample time after publication of a final rule to use up any labeling implemented in conformance with this proposal.

IV. Analysis of Impacts

FDA has examined the impacts of the proposed rule under Executive Order 12866 and the Regulatory Flexibility Act (5 U.S.C. 601–612). Executive Order 12866 directs agencies to assess all costs and benefits of available regulatory alternatives and, when regulation is necessary, to select regulatory approaches that maximize net benefits (including potential economic, environmental, public health and safety, and other advantages; distributive impacts; and equity). Under the Regulatory Flexibility Act, if a rule has a significant economic impact on a substantial number of small entities, an agency must analyze regulatory options that would minimize any significant economic impact of a rule on small entities.

Title II of the Unfunded Mandates Reform Act (2 U.S.C. 1501 *et seq.*) requires that agencies prepare a written statement and economic analysis before proposing any rule that may result in the expenditure in any 1 year by State, local, and tribal governments, in the aggregate, or by the private sector, of $100 million (adjusted annually for inflation).

The agency believes that this proposed rule is consistent with the principles set out in the Executive Order and in these two statutes. The purpose of this proposed rule is to revise and improve the labeling (add additional warning and direction statements) for topical/inhalant products that contain camphor, menthol, or both ingredients. This revised labeling addresses the flammability of these products when used near an open flame, in hot water, or in a microwave oven, and is intended to provide consumers additional information to help ensure safer use of these products. Potential benefits include reduction in the number of flash

fires and serious burns when consumers use these products.

This proposed rule would amend the final monograph for OTC antitussive drug products and would require some relabeling for topical/inhalant products that contain camphor, menthol, or both ingredients. The agency's Drug Listing System identifies approximately 30 manufacturers and 79 marketers of over 100 stock keeping units (SKU) (individual products, packages, and sizes) of topical/inhalant antitussive drug products containing camphor, menthol, or both ingredients. There may be a few additional marketers and products that are not identified in the sources FDA reviewed.

The agency estimates that relabeling costs of the type that would be required by this proposal generally average about $2,000 to $3,000 per SKU. Assuming that there are about 110 affected OTC SKU's in the marketplace, total one-time costs of relabeling would be $220,000 to $330,000. The agency believes that actual costs would be lower for several reasons. First, most of the label changes will be made by private label manufacturers that tend to use relatively simple and less expensive labeling. Second, the agency is proposing a 12-month implementation period that would allow many manufacturers to coordinate this change with routinely scheduled label printing and/or revisions. Similarly, labeling changes for these products would not be required until the monograph amendment is issued and becomes effective. Thus, manufacturers would have time to use up existing labeling stocks and the relabeling costs would be mitigated. Third, manufacturers may be able to implement the new labeling required by this proposal at the same time that they implement the new labeling format proposed for OTC drug products (62 FR 9024). Thus, the relabeling costs resulting from two different but related final rules may be individually reduced by implementing both required changes at the same time.

The agency considered but rejected a shorter implementation period. While the agency would like to have this new labeling in place as soon as possible, it considers a period less than 12 months difficult for some manufacturers to implement all of the labeling that would be required by this proposal.

The proposed rule would not require any new reporting and recordkeeping activities. Therefore, no additional professional skills are needed. There are no other Federal rules that duplicate, overlap, or conflict with the proposed rule. The agency does not believe that there are any significant alternatives to the proposed rule that would reduce the economic impact of the rule on small entities and would still adequately provide for the safe and effective OTC use of antitussive topical/inhalant drug products that contain camphor, menthol, or both ingredients. For example, the agency considered a longer implementation period but concluded that the marginal reduction in costs associated with an implementation period greater than 12 months could not be justified in light of the additional injuries that would likely occur. The agency also considered but rejected more permissive warning language but concluded that such language would not adequately reduce the number of adverse events and accidents.

Based on current information, the agency does not believe that this proposed rule will have a significant economic impact on a substantial number of small entities, using the U.S. Small Business Administration designations for this industry (750 employees). As discussed above, FDA is aware of only 30 manufacturers affected by this rule, most of which are assumed to be small for the purposes of this analysis. In addition, the agency believes that any other unidentified manufacturer of these products is also likely to be a small entity. From information available to the agency, it appears that only one small entity manufactures more than three SKU's of these products. Based on the limited number of SKU's each manufacturer has to relabel, the cost for each manufacturer except one should be minimal.

The analysis shows that this proposed rule is not economically significant under Executive Order 12866 and that the agency has made an effort to reduce the burden to small entities. In addition, this economic analysis, together with other relevant sections of this document, serves as the agency's initial regulatory flexibility analysis, as required under the Regulatory Flexibility Act. Finally, this analysis shows that the Unfunded Mandates Act does not apply to the proposed amendment because it would not result in an expenditure in any 1 year by State, local, and tribal governments, in the aggregate, or by the private sector, of $100 million.

The agency invites public comment regarding any substantial or significant economic impact that this rulemaking would have on manufacturers of OTC antitussive topical/inhalant drug products that contain camphor, menthol, or both ingredients. Comments regarding the impact of this rulemaking on such manufacturers should be accompanied by appropriate documentation. The agency is providing a period of 90 days from the date of publication of this proposed rulemaking in the **Federal Register** for comments to be developed and submitted. The agency will evaluate any comments and supporting data that are received and will reassess the economic impact of this rulemaking in the preamble to the final rule.

In the **Federal Register** of February 27, 1997 (62 FR 9024), FDA proposed to establish a standardized format for the labeling of OTC drug products. When the agency finalizes the February 27, 1997, labeling rule, the agency will also amend the final version of this proposed rule, as needed, to conform to the final labeling rule.

V. Paperwork Reduction Act of 1995

FDA tentatively concludes that the labeling requirements proposed in this document are not subject to review by the Office of Management and Budget because they do not constitute a ''collection of information'' under the Paperwork Reduction Act of 1995 (44 U.S.C. 3501 *et seq*). Rather, the proposed labeling requirements are a ''public disclosure of information originally supplied by the Federal Government to the recipient for the purpose of disclosure to the public'' (5 CFR 1320.3(c)(2)).

VI. Environmental Impact

The agency has determined under 21 CFR 25.24(c)(6) that this action is of a type that does not individually or cumulatively have a significant effect on the human environment. Therefore, neither an environmental assessment nor an environmental impact statement is required.

VII. Request for Comment

Interested persons may, on or before October 19, 1998, submit written comments to the Dockets Management Branch (address above). Written comments on the agency's economic impact determination may be submitted on or before October 19, 1998. Three copies of all comments are to be submitted, except that individuals may submit one copy. Comments are to be identified with the docket number found in brackets in the heading of this document and may be accompanied by a supporting memorandum or brief. Received comments may be seen in the office above between 9 a.m. and 4 p.m., Monday through Friday.

List of Subjects in 21 CFR Part 341

Labeling, Over-the-counter drugs.

Therefore, under the Federal Food, Drug, and Cosmetic Act and under authority delegated to the Commissioner of Food and Drugs, it is proposed that 21 CFR part 341 be amended as follows:

PART 341—COLD, COUGH, ALLERGY, BRONCHODILATOR, AND ANTIASTHMATIC DRUG PRODUCTS FOR OVER–THE–COUNTER HUMAN USE

1. The authority citation for 21 CFR part 341 continues to read as follows:

Authority: 21 U.S.C. 321, 351, 352, 353, 355, 360, 371.

2. Section 341.74 is amended by adding paragraphs (c)(5)(iii), (c)(5)(iv), and (c)(5)(v), and revising paragraphs (d)(2)(i), (d)(2)(ii), (d)(2)(iv), and (d)(2)(v) to read as follows:

§ 341.74 Labeling of antitussive drug products.

* * * * *

(c) * * *

(5) * * *

(iii) *For any product containing camphor or menthol in a suitable ointment vehicle or for steam inhalation use.*—(A) The labeling should contain an appropriate flammability signal word, e.g., ''extremely flammable,'' ''flammable,'' ''combustible,'' consistent with 16 CFR 1500.3(b)(10).

(B) ''Keep away from fire or flame.''

(iv) *For any product formulated in a volatile vehicle.* ''Cap container tightly and store at room temperature away from heat.''

(v) *For any product with labeling that contains warnings, the following information shall appear after the subheader ''Do Not Use''.*—(A) ''Near an open flame.''

(B) ''By adding to hot water.''

(C) ''In a microwave oven.''

(D) ''In a container in which water is being heated, except when adding to cold water in only a hot steam vaporizer.''

(d) * * *

(2) * * *

(i) *For products containing camphor identified in § 341.14(b)(1) in a suitable ointment vehicle.* The product contains 4.7 to 5.3 percent camphor. Adults and children 2 to under 12 years of age: Rub on the throat and chest in a thick layer. Cover with a warm, dry cloth if desired. However, clothing should be loose about throat and chest to help vapors reach the nose and mouth. Use up to three times daily or as directed by a doctor. Children under 2 years of age: Consult a doctor. ''See important warnings about not using near a flame, in hot water, or in a microwave oven. Improper use may cause the mixture to splatter and cause burns.'' (Last two sentences to be highlighted in bold type or contrasting color.)

(ii) *For products containing menthol identified in § 341.14(b)(2) in a suitable ointment vehicle.* The product contains 2.6 to 2.8 percent menthol. Adults and children 2 to under 12 years of age: Rub on the throat and chest in a thick layer. Cover with a warm, dry cloth if desired. However, clothing should be loose about throat and chest to help vapors reach the nose and mouth. Use up to three times daily or as directed by a doctor. Children under 2 years of age: Consult a doctor. ''See important warnings about not using near a flame, in hot water, or in a microwave oven. Improper use may cause the mixture to splatter and cause burns.'' (Last two sentences to be highlighted in bold type or contrasting color.)

* * * * *

(iv) *For products containing camphor identified in § 341.14(b)(1) for steam inhalation use.* The product contains 6.2 percent camphor. Adults and children 2 to under 12 years of age: Add 1 tablespoonful of solution, for each quart of water, or add 1½ teaspoonsful of solution, for each pint of water, directly to cold water in only a hot steam vaporizer. Breathe in the medicated vapors. Use up to three times daily or as directed by a doctor. Children under 2 years of age: Consult a doctor. ''See important warnings about not using near a flame, in hot water, or in a microwave oven. Improper use may cause the mixture to splatter and cause burns.'' (Last two sentences to be highlighted in bold type or contrasting color.)

(v) *For products containing menthol identified in § 341.14(b)(2) for steam inhalation use.* The product contains 3.2 percent menthol. Adults and children 2 to under 12 years of age: Add 1 tablespoonful of solution, for each quart of water, or add 1½ teaspoonsful of solution, for each pint of water, directly to cold water in only a hot steam vaporizer. Breathe in the medicated vapors. Use up to three times daily or as directed by a doctor. Children under 2 years of age: Consult a doctor. ''See important warnings about not using near a flame, in hot water, or in a microwave oven. Improper use may cause the mixture to splatter and cause burns.'' (Last two sentences to be highlighted in bold type or contrasting color.)

Dated: July 8, 1998.

William K. Hubbard,

Associate Commissioner for Policy Coordination.

[FR Doc. 98–19239 Filed 7–17–98; 8:45 am]

BILLING CODE 4160–01–F

DEPARTMENT OF JUSTICE

28 CFR Part 23

[OJP (BJA)–1177]

RIN 1121–ZB14

Criminal Intelligence Sharing Systems; Policy Clarification

AGENCY: Bureau of Justice Assistance (BJA), Office of Justice Programs (OJP), Justice.

ACTION: Proposed clarification of policy.

SUMMARY: The current policy governing the entry of identifying information into criminal intelligence sharing systems requires clarification. This policy clarification is to make clear that the entry of individuals, entities and organizations, and locations that do not otherwise meet the requirements of reasonable suspicion is appropriate when it is done solely for the purposes of criminal identification or is germane to the criminal subject's criminal activity. Further, the definition of ''criminal intelligence system'' is clarified. While this clarification is not a rulemaking for the purposes of the Administrative Procedure Act, 5 U.S.C. 553, BJA is of the opinion that this clarification is significant enough to warrant public comment.

DATES: Public comment is due by September 18, 1998. Comments may be faxed to (202) 307–1419, e-mailed to ''fisheral@ojp.usdoj.gov,'' or mailed to the Office of the General Counsel, 810 7th Street NW, Washington, DC, 20531.

FOR FURTHER INFORMATION CONTACT: Paul Kendall, General Counsel, Office of Justice Programs, 810 7th Street NW, Washington, DC 20531, (202) 307–6235.

SUPPLEMENTARY INFORMATION: The operation of criminal intelligence information systems is governed by 28 CFR Part 23. This regulation was written to both protect the privacy rights of individuals and to encourage and expedite the exchange of criminal intelligence information between and among law enforcement agencies of different jurisdictions. Frequent interpretations of the regulation, in the form of policy guidance and correspondence, have been the primary method of ensuring that advances in technology did not hamper its effectiveness.

Use of Identifying Information

28 CFR 23.3(b)(3) states that criminal intelligence information that can be put into a criminal intelligence sharing system is ''information relevant to the identification of and the criminal activity engaged in by an individual who or organization which is reasonably suspected of involvement in criminal activity, and * * * [m]eets criminal intelligence system submission criteria.'' Further, 28 CFR 23.20(a) states that a system shall only collect information on an individual if ''there is reasonable suspicion that the individual is involved in criminal conduct or activity and the information is relevant to that criminal conduct or activity.'' 28 CFR 23.20(b) extends that limitation to collecting information on groups and corporate entities.

In an effort to protect individuals and organizations from the possible taint of having their names in intelligence systems (as defined at 28 CFR § 23.3(b)(1)), the Office of Justice Programs has previously interpreted this section to allow information to be placed in a system only if that information independently meets the requirements of the regulation. Information that might be vital to identifying potential criminals, such as favored locations and companions, or names of family members, has been excluded from the systems. This policy has hampered the effectiveness of many criminal intelligence sharing systems.

Given the swiftly changing nature of modern technology and the expansion of the size and complexity of criminal organizations, the Bureau of Justice Assistance (BJA) has determined that it is necessary to clarify this element of 28 CFR Part 23. Many criminal intelligence databases are now employing ''Comment'' or ''Modus Operandi'' fields whose value would be greatly enhanced by the ability to store more detailed and wide-ranging identifying information. This may include names and limited data about people and organizations that are not suspected of any criminal activity or involvement, but merely aid in the identification and investigation of a criminal suspect who independently satisfies the reasonable suspicion standard.

Therefore, BJA issues the following clarification to the rules applying to the use of identifying information. Information that is relevant to the identification of a criminal suspect or to the criminal activity in which the suspect is engaged may be placed in a criminal intelligence database, provided that (1) appropriate disclaimers accompany the information noting that is strictly identifying information, carrying no criminal connotations; (2) the identifying information may not be used as an independent basis to target a subject for investigation or to establish reasonable suspicion of involvement in criminal activity; and (3) the individual who is the criminal suspect identified by this information otherwise meets all requirements of 28 CFR Part 23. This information may be a searchable field in the intelligence system.

For example: A person reasonably suspected of being a drug dealer is known to conduct his criminal activities at the fictional ''Northwest Market.'' An agency may wish to note this information in a criminal intelligence database, as it may be important to future identification of the suspect. Under the previous interpretation of the regulation, the entry of ''Northwest Market'' would not be permitted, because there was no reasonable suspicion that the ''Northwest Market'' was a criminal organization. Given the current clarification of the regulation, this will be permissible, provided that the information regarding the ''Northwest Market'' was clearly noted to be non-criminal in nature. For example, the data field that ''Northwest Market'' was entered in could be marked ''Non-Criminal Identifying Information,'' or the words ''Northwest Market'' could be followed by a parenthetical comment such as ''This organization has been entered into the system for identification purposes only—it is not suspected of any criminal activity or involvement.'' ''Northwest Market'' could not become the target of an investigation solely on the basis of the information provided in the comment field on the suspected drug dealer. Independent information would have to be obtained as a basis for the opening of an investigative file or the submission of intelligence information, based on reasonable suspicion, on ''Northwest Market.'' Further, the fact that other individuals frequent ''Northwest Market'' would not provide a reasonable suspicion determination for those other individuals.

The Definition of a ''Criminal Intelligence System''

The definition of a ''criminal intelligence system'' is given in 28 CFR 23.3(b)(1) as the ''arrangements, equipment, facilities, and procedures used for the receipt, storage, interagency exchange or dissemination, and analysis of criminal intelligence information . . . .'' Given the fact that cross-database searching techniques are now common-place, and given the fact that multiple databases may be contained on the same computer system, BJA has determined that this definition needs clarification, specifically to differentiate between criminal intelligence systems and non-intelligence systems.

The comments to the 1993 revision of 28 CFR Part 23 noted that ''[t]he term 'intelligence system' is redefined to clarify the fact that historical telephone toll files, analytical information, and work products that are not either retained, stored, or exchanged and criminal history record information or identification (fingerprint) systems are excluded from the definition, and hence are not covered by the regulation * * *.'' 58 FR 48448–48449 (Sept. 16, 1993.) The comments further noted that materials that ''may assist an agency to produce investigative or other information for an intelligence system * * *'' do not necessarily fall under the regulation. *Id.*

The above rationale for the exclusion of non-intelligence information sources from the definition of ''criminal intelligence system,'' suggests now that, given the availability of more modern non-intelligence information sources such as the Internet, newspapers, motor vehicle administration records, and other public record information on-line, such sources shall not be considered part of criminal intelligence systems, and shall not be covered by this regulation, even if criminal intelligence systems access such sources during searches on criminal suspects. Therefore, criminal intelligence systems may conduct searches across the spectrum of non-intelligence systems without those systems being brought under 28 CFR Part 23. There is also no limitation on such non-intelligence information being stored on the same computer system as criminal intelligence information, provided that sufficient precautions are in place to separate the two types of information and to make it clear to operators and users of the information that two different types of information are being accessed. Such precautions should be consistent with the above clarification of the rule governing the use of identifying information. This could be accomplished, for example, through the use of multiple windows, differing colors of data or clear labeling of the nature of information displayed.

Additional guidelines will be issued to provide details of the above clarifications as needed.

Richard H. Ward, III,

Director, Bureau of Justice Assistance.

[FR Doc. 98–19092 Filed 7–17–98; 8:45 am]

BILLING CODE 4410–18–P

ENVIRONMENTAL PROTECTION AGENCY

40 CFR Part 86

[AMS–FRL–6124–1]

Optional Certification Streamlining Procedures for Light-Duty Vehicles, Light-Duty Trucks, and Heavy-Duty Engines for Original Equipment Manufacturers and for Aftermarket Conversion Manufacturers; Notice of Proposed Rule

AGENCY: Environmental Protection Agency (EPA).

ACTION: Notice of proposed rule.

SUMMARY: In today's action, EPA is proposing to amend the current regulatory provisions regarding the certification of light-duty vehicles, light-duty trucks, and heavy-duty engines that meet the Clean-Fuel Vehicle (CFV) requirements. This proposed action would serve to ease the burden of certification for manufacturers of CFVs. EPA is also proposing to revise the definition for dedicated fuel systems to include CFVs with limited ability to operate on a conventional fuel, and is also proposing to amend current regulations to allow manufacturers of CFVs to group certain engine families together for certification purposes. In addition, EPA is proposing an exemption, for MY 1999, 2000 and 2001, from certification fees for dedicated gaseous-fueled vehicles and engines that certify to EPA's Tier 1 standards as well as for all vehicles and engines that certify to EPA's CFV, Low-Emission Vehicle (LEV), Ultra Low Emission Vehicle (ULEV), Inherently Low Emission Vehicle (ILEV), or Zero Emission Vehicle (ZEV) emission standards.

DATES: Any party who wishes to submit comments must do so by August 19, 1998 unless a hearing is requested. Any person can request EPA to hold a public hearing on this action, but such request must be received by August 19, 1998. If a hearing is requested, it will take place on September 18, 1998, and interested parties will have an additional 30 days after the hearing (until October 19, 1998) to submit comments on any information presented at the hearing. Because no hearing will occur, absent a request for one, interested parties should contact Clifford D. Tyree at the number listed below after August 19, 1998 to determine whether a hearing will take place.

ADDRESSES: Written comments should be submitted (in duplicate if possible) to: Air Docket Section (6102), Attention: Docket No. A–97–27, U.S. Environmental Protection Agency, 401 M Street, SW, Washington, D.C. 20460, or hand-delivered to the Air Docket at the above address, in Room M–1500, Waterside Mall. A copy of written comments should also be submitted to Clifford D. Tyree at the address below.

Materials relevant to this notice of proposed rule are contained in Docket No. A–97–27, located at the Air Docket, 401 M Street SW, Washington, DC 20460, and may be reviewed in Room M–1500 from 8:00 a.m. until 5:30 p.m. on business days. As provided in 40 CFR Part 2, EPA may charge a reasonable fee for photocopying docket materials.

FOR FURTHER INFORMATION CONTACT: Mr. Clifford Tyree, Project Manager, U.S. EPA, National Vehicle and Fuel Emission Laboratory, Vehicle Programs and Compliance Division, 2565 Plymouth Road, Ann Arbor, MI 48105–2425. Telephone: (734) 214–4310; FAX 734–214–4869. E-Mail, tyree.clifford@epamail.epa.gov.

SUPPLEMENTARY INFORMATION:

Regulated Entities

Entities potentially regulated by this notice of proposed rulemaking are Original Equipment Manufacturers (OEMs) of Light-Duty Vehicles, Light-Duty Trucks (LDTs), and Heavy-Duty Engine (HDEs) manufacturers. In addition, aftermarket convertors of LDVs, LDTs, and HDEs will also be regulated. Entities include:

Category	Examples of regulated entities
Auto industry of light-duty vehicles, light-duty trucks, and heavy-duty engines.	Original Equipment Manufacturers (OEMs) and Aftermarket Converters.

This table is not intended to be exhaustive, but rather provides a guide for readers regarding entities likely to be regulated by this proposed action. This table lists the types of entities that EPA is now aware could potentially be regulated by this proposed action. Other types of entities not listed in the table could also be regulated. If you have questions regarding the applicability of this proposed action to a particular product, consult the person listed in the preceding **FOR FURTHER INFORMATION CONTACT** section.

Obtaining Electronic Copies of the Regulatory Documents

The preamble, regulatory and other related documents are also available electronically from the EPA Internet Web site. This service is free of charge, except for any cost you already incur for internet connectivity. An electronic version is made available on the day of publication on the primary Web site listed below. The EPA Office of Mobile Sources also publishes **Federal Register** notices and related documents on secondary Web site listed below.

1. http://www.epa.gov/docs/fedrgstr/EPA-AIR/(either select desired date or use Search feature.)

2. http://www.epa.gov/OMSWWW/cff.htm

Please note that due to differences between the software used to develop the document and the software into which the document may be downloaded, changes in format, page length, etc. may occur.

I. Background [1]

EPA's emissions standards and requirements for clean-fuel vehicles (CFVs) are contained in 40 CFR Part 88. These regulations include several sets of exhaust emissions standards for clean-fuel vehicles (CFVs): Transitional Low-Emission Vehicle (TLEV) standards, Low-Emission Vehicle (LEV) standards, Inherently Low-Emission Vehicle (ILEV), Ultra Low-Emission Vehicle (ULEV) standards, and Zero-Emission Vehicle (ZEV) standards. The regulations also apply all standards and requirements in 40 CFR Part 86 to CFVs, except the Part 86 exhaust emissions standards for those pollutants for which Part 88 establishes standards. The CFV standards apply to all CFVs, including those that operate on gaseous-fuels like compressed natural gas (CNG) and liquefied petroleum gas (LPG).

Section 246 of the Clean Air Act, as amended in 1990 (''CAA'' or ''the Act''), requires states to adopt in their State Implementation Plans (SIP) a Clean-fuel Fleet Program (CFFP) for certain ozone and carbon monoxide nonattainment areas. The states' CFFPs must require that fleet operators with central fueling capability shall include a certain percentage of CFVs that meet LEV emissions standards in their vehicle purchases each year, and shall operate such vehicles on clean alternative-

[1] EPA has included in this notice a brief summary of the aftermarket conversion requirements and the Clean-Fuel Fleet program. Readers may consult EPA's current certification regulations in 40 CFR Parts 86 and EPA's clean fuel vehicle regulations in 40 CFR part 88, as well as the following notices of final rulemaking: Emissions Standards for Clean Fuel Vehicles and Engines (59 FR 50042, September 30, 1994) and Standards for Emissions from Natural Gas-fueled and Liquefied Petroleum Gas-fueled Motor Vehicles and Motor Vehicle Engines, and Certification Procedures for Aftermarket Conversions (59 FR 48471, September 21, 1994), for additional background information.

fuels.[2] EPA is aware that fleet operators subject to CFFP requirements are concerned about sufficient availability of CFVs to meet such requirements. For the 1997 model year, one light-duty vehicle, two light-duty trucks, and five heavy-duty vehicle engine families have been certified to federal CFV standards.

The EPA's Office of Mobile Sources recently adopted a one-year delay in implementation of state CFFPs, due to concerns about sufficient CFV availability to meet fleet operator requirements.[3]

In today's action, EPA is proposing to amend certain provisions intended to encourage and facilitate the certification of CFVs by reducing the costs of certifying in three specific areas. These provisions are described in detail below.

II. Today's Proposal

A. Definition of Dedicated Vehicle

Current EPA regulations define a ''dual-fuel vehicle'' as a motor vehicle, or engine, engineered and designed to be operated on two different fuels, but not on a mixture of fuels.[4] A ''dedicated vehicle'' is defined as a vehicle or engine engineered and designed to be operated using a single fuel.[5]

There are specific requirements that apply to dual-fuel light-duty vehicles (LDVs)[6] and light light-duty trucks (LLDT)[7] certifying to the CFV emissions standards. A dual-fuel vehicle must comply with the applicable set of standards for each fuel on which it can operate. To qualify as CFVs for purposes of state CFFPs, dual-fuel vehicles must meet LEV (or more stringent) emissions standards on the clean alternative fuel and the TLEV non-methane organic gas (NMOG) emission standard on the conventional fuel.[8] On the conventional fuel, the vehicle must meet Tier 1, NMOG and HCHO emission standards and also comply with all other motor vehicle emissions control requirements contained in 40 CFR Part 86 (such as the cold temperature carbon monoxide standard (Cold CO), onboard diagnostic requirement (OBD), and certification short test (CST) requirements) that apply to comparable conventional gasoline vehicles.

For vehicles with a dedicated fuel system to be a feasible option for fleets, many fleet operators will need the flexibility to operate on conventional fuel in emergency situations, when central fueling is impossible. If the fleet operator is subject to the CFFP, and is operating in a nonattainment area covered by the CFFP, he must operate the vehicle on a fuel on which the vehicle meets the CFV emissions standards to comply with the CFFP requirements. If the vehicle is certified to the LEV emissions standards on both fuels, the fleet operator would have the option of using the conventional fuel in the covered nonattainment area. However, if the vehicle is certified to the LEV standards only on CNG or LPG, that option would not be available.

In light of the limited gaseous-fuel fueling stations in the nonattainment areas covered by a CFFP, fleet operators are concerned that the safety of vehicle operators and occupants could be at risk during inclement weather.[9] In addition, unforeseen traffic delays (or other unforeseen delays) may cause fleet vehicles to be stranded, resulting in higher costs for and reduced efficiency of the fleet. For these reasons, EPA has determined that it would be reasonable and appropriate to revise the definition of a dedicated vehicle to allow operation up to a limited mileage on a conventional fuel.

As described above, fleet operators subject to the CFFP must operate their CFV's on a ''clean alternative fuel,'' as defined in CAA Section 241(2). To ensure that CFVs that operate on gaseous fuels are a feasible option for fleet operators covered by the CFFP, EPA would certify as dedicated CFVs vehicles meeting the CFV dual-fuel standards with limited ability to operate on a conventional fuel, as described above. EPA's issuance of such certificates is authorized by the Agency's authority to adopt *de minimis* exemptions to statutory requirements, and is consistent with Congressional intent.

Section 246(b) of the CAA requires state CFFPs to provide that covered fleet operators must operate their clean-fuel vehicles on clean alternative fuels when operating in the covered nonattainment area. Clean alternative fuel, in turn, is defined as a fuel used in a CFV that meets applicable emissions standards and requirements when operating on such fuel. See § 241(2). Courts have recognized EPA's authority to provide exemptions from CAA requirements when the burdens of regulation yield a gain of trivial or no value. *Alabama Power* v. *Costle,* 636 F.2d.323 (D.C. Cir. 1979). EPA believes that prohibiting gaseous-fueled vehicles capable of limited operation on gasoline from qualifying as CFVs would unnecessarily increase the burden of compliance with state CFFPs, and would not result in any emissions benefits.

Allowing limited operation of such vehicles on gasoline in emergency situations would not result in any adverse emissions impacts. If a gaseous-fueled fleet vehicle is stranded within the nonattainment area due to lack of fuel, and cannot operate on gasoline, even for a limited number of miles, without violating the CFFP requirements, another vehicle would have to be dispatched to ''rescue'' the stranded vehicle and its occupants. The second vehicle may not be a CFV, especially if it is not owned by the covered fleet (e.g., if a tow truck was required to retrieve the stranded vehicle). This ''rescue operation'' will therefore result in emissions likely to be equivalent to, and perhaps in excess of, the incremental additional emissions resulting from the limited operation of the gaseous-fueled CFV on gasoline.

In general, EPA expects that CFVs meeting the revised definition of dedicated vehicle would meet the Tier 1 emission standards when operating on conventional fuel. EPA expects that Original Equipment Manufacturers (OEMs) will produce vehicles that meet the revised definition of dedicated vehicle and have limited ability to operate on a conventional fuel by limiting the conventional fuel use function of dual-fuel vehicles (or engines) previously certified to Tier 1 emissions standards on conventional fuel. Aftermarket conversion companies are likely to convert vehicles (or engines) previously certified to Tier 1 standards on a conventional fuel to operate on a gaseous fuel at least LEV emissions levels. If these vehicles are equipped with an emergency reserve tank with limited capacity for the conventional fuel, EPA expects that the vehicles' emissions on conventional fuel during emergency operation will be similar to the emissions of the vehicle prior to conversion (i.e., Tier 1 emissions levels). Therefore, EPA believes it would be appropriate for state CFFPs to allow fleet operators to purchase dedicated gaseous-fueled vehicles that have limited ability to operate on gasoline, and to operate for

[2] A clean alternative fuel is defined as a fuel used in a vehicle that meets the CFV standards when operating on such fuel. See CAA Section 241(2).

[3] 40 CFR 88.304–98, Direct Final Rule, 63 FR 20103, April 23, 1998.

[4] 40 CFR 88.102–94.

[5] 40 CFR 86.090–2.

[6] 40 CFR 86.082–2, A light-duty vehicle (LDV) means a passenger car or passenger car derivative capable of seating 12 passengers or less.

[7] 40 CFR 86.094–2, A light light-duty (LLDT) means any light-duty truck rated through 6,000 lbs. GVWR.

[8] Formaldehyde (HCHO) exhaust emission standards apply to any fuel used to meet CFV standards, including gasoline.

[9] The CFFP requires fleet operators to operate their CFVs on clean alternative fuels only when in the covered nonattainment area. Therefore, for dual-fuel CFVs, fleet operators may use either the clean alternative fuel or the conventional fuel outside the covered nonattainment area.

limited mileage on gasoline in emergency situations in the covered nonattainment area.

EPA regulations define the term ''centrally fueled'' as meaning a fleet, or that part of a fleet, consisting of vehicles that are fueled 100 percent of the time at a location that is owned, operated, or controlled by the covered fleet operator, or is under contract with the covered fleet operator. See 40 CFR 88.302–94. The proposed *de minimis* exemption for limited operation on conventional fuel described above would not affect this definition of ''centrally fueled'', because the *de minimis* exemption would allow only limited operation in emergency circumstances. A fleet operator would still need to determine whether, in normal circumstances, its covered fleet vehicles are centrally fueled 100 percent of the time.

EPA considered two modifications to the definition of dedicated vehicle to allow limited operation on conventional fuel. EPA considered proposing to modify the definition of a dedicated fueled vehicle to allow vehicles to be equipped with a fuel tank that would allow a range of operation of 50 statute miles. This would require the replacement of the existing gasoline tank with a tank of approximately two-gallon capacity. However, the act of removing an existing fuel tank that has met the crash tests and other testing required by the National Highway Transportation Safety Administration (NHTSA) [10] could require another set of vehicle crash tests with any vehicle using a ''new'' fuel tank system, and the cost of conducting another set of vehicle crash tests may deter manufacturers from modifying vehicles in this manner.

An alternative modification EPA considered proposing is retention of the existing fuel tank and use of a timer to restrict fuel usage. The timer could allow a maximum of one hour of operation on gasoline followed by a period of time the vehicle could not operate on gasoline. Manufacturers would be required to program these time periods into one of the vehicle's computers. The choice of one hour of operation is roughly equivalent to the 50-mile range criterion, based on the combined fuel economy values and an assumed vehicle average speed of 50 miles-per-hour.

To provide maximum flexibility to manufacturers and fleet operators, EPA is proposing to amend definition of a dedicated vehicle to allow both of these approaches: clean fuel vehicles equipped with a timer that limits operation on gasoline to one hour at a time, and clean fuel vehicles equipped with a fuel tank with fuel capacity of no more than 50 miles of operation on gasoline, will be included in the definition of a dedicated vehicle. Because the use of conventional fuel is intended for emergency use only, and the operation on conventional fuel is expected to be an exception, no emission or fuel economy testing would be required on these vehicles with conventional fuel.

The proposed revision to the definition of dedicated fuel systems would apply only to light-duty vehicles and light-duty trucks, because EPA has not adopted heavy-duty flexible and dual fueled Clean-Fuel vehicle standards. See 59 FR 50050 (September 30, 1994).

B. Engine Family Criteria and Assigned Deterioration Factors

Manufacturers and aftermarket converters have expressed concerns to EPA regarding the overall burden of complying with EPA's certification regulations for vehicles converted to operate on a clean alternative fuel for the purpose of meeting EPA's CFV emissions standards. The burdens identified relate to the cost of certifying each engine family and the narrowness of the criteria under which exhaust emission control systems are classified into engine families.[11]

Because of the diversity in marketing requirements, a number of engine families, with limited sales, would be created under current regulations to meet consumer needs. Currently EPA provides for relief from full useful life deterioration factor (DF) requirement for engine families with a combined total sales of no more than 10,000 vehicles or engines.[12] In today's action EPA is proposing to adopt similar provisions, applicable thru MY 2001, for vehicles and engines certified to EPA's CFV emissions standards.

The costs identified by the OEM and aftermarket conversion manufacturers were the actual costs associated with certifying each engine family. Costs attributed to certifying each engine family are development costs, testing costs, and certification fees. Various aftermarket conversion entities have estimated the costs of generating DFs to be in excess of $1 million for *each* engine family. While EPA does not have data to corroborate these cost estimates, the Agency believes that the cost of generating DFs is significant, but expects it is well below $1 million per engine family. EPA's current regulations for small volume engine family certification allow manufacturers to use assigned DFs generated by EPA. *See* 40 CFR 86.096–24(e)(2) Manufacturers may also use Dfs they have generated using good engineering judgment. *See* 40 CFR 86.094–14(c)(7)(i)(C)(*2*)(*i*). In today's action, EPA is proposing to amend the regulations that clarify these options are also available for CFV small-volume engine families. In September, 1995, EPA issued a guidance letter to manufacturers containing assigned DFs for gaseous fueled vehicles. In general, EPA expects that manufacturer's use of these assigned DFs for gaseous fueled CFVs would qualify as DFs generated using good engineering judgment under the regulatory provision adopted today.

EPA is proposing to amend the provisions that allow grouping of certain CFV engine families into an engine family class. The criteria for such grouping is described below. EPA expects that this proposed action would serve to encourage production of CFVs for fleet operators to purchase and use to meet state CFFP purchase requirements by reducing the amount of testing needed for certification of CFVs. This would allow manufacturers to introduce a greater number of CFV models desired by fleet owners without incurring additional testing costs.

Fleet vehicles must be able to perform a wide variety of duties, such as meter-reading tasks, service repair, making deliveries, transporting passengers, etc. Therefore, for a manufacturer or aftermarket converter to be competitive in the clean fuel vehicle fleet market, multiple engine families need to be certified for different needs.

Currently, vehicle grouping for the purpose of certification is accomplished though the application of the ''engine family'' and ''emission control system'' definitions in the regulations. Today's proposal would establish a new definition for grouping engine families: engine family class. An engine family class would be defined as engines sharing the following common characteristics: (1) Meeting LEV, ILEV, ULEV, or ZEV emission standards in 40 CFR Part 88, (2) same car line name, (3) all engines have engine displacements within a range of 0.8L [13] less than the displacement of the engine used for certification testing, (4) same catalyst construction, (5) same type of precious metals used in the catalyst, and (6) same

[10] Reference NHTSA's rules found at 49 CFR Part 555.

[11] 40 CFR 86.096–24.

[12] 40 CFR 86.094–24(e)(2).

[13] *See* EPA Advisory Circular 17F, page 9, which can be found in the docket for this rulemaking action.

relative engine/catalyst size and loading rates.

EPA is proposing to amend the criteria for engine family classes to reduce the certification burden for CFVs and to combine vehicles which are likely to exhibit similar exhaust emission deterioration over their useful lives, based on the characteristics of current-technology vehicles that most significantly affect the deterioration of emission control over time. Each engine family class would be certified using separate emission compliance data and a separate certificate of conformity would be required for each engine family class.

The engine family concept was originally developed as a way to combine vehicles of similar emission deterioration rates. At that time (in the early 1970's), the use of catalytic converters was less prevalent and most emission reductions occurred though modifications to the engine operating characteristics. For these vehicles, all emission deterioration was due to increases in emissions coming directly out of the engine (called ''engine-out'' emissions). Consequently, the definition of engine family focused on engine-based parameters. Since that time, there have been many advances in exhaust emission control technology which have made the engine family concept less useful for the purposes of grouping vehicles together on the basis of emission deterioration.

In today's vehicles, most emission control is accomplished through catalytic conversion of the exhaust while the engine is controlled to operate within carefully controlled air/fuel ratios to ensure optimum catalyst efficiency. While manufacturers have demonstrated that essentially no engine-out deterioration is experienced in their current product, the mating of the catalyst with the engine is extremely important. Appropriate sizing of the catalyst to the engine is critical to achieve an appropriate catalyst residence time (the time the exhaust gases remain in the catalyst) so that the catalytic reaction has time to be completed. Adequate levels of precious metal loading and appropriate dispersion are necessary to provide the active sites for conversion and achieve the desired conversion rates. Also, the catalyst must be placed in a temperature environment that allows it to quickly come to operating temperature but does not expose it to damaging amounts of high temperature during in-use driving.

The proposed engine family class definition takes into account the changes in emission control technology by shifting the focus away from engine parameters to the ability of the overall engine and emission control system to meet LEV, or better, standards. This single requirement of focusing on a more stringent emission standard would require the matching of the catalyst to the engine. The Agency believes that the proposed engine family class definition would comprise an effective emission control program and result in significant environmental benefits by giving manufacturers additional incentives to produce and market a broader range of vehicles and engines that meet the CFV standards.

EPA is proposing to provide this newly created engine family class criteria through model year 2001, by which time EPA expects that manufacturers would have had several years to assess the market requirements and should be able to more accurately predict which vehicle models, out of approximately 400 engine families currently certified, fleet owners need and consumers favor. Manufacturers would then know which engine families to focus certification testing on, rather than certifying a variety of engine families. EPA currently intends to propose new certification procedures for all light-duty vehicles and light-duty trucks for application in model year 2000. If these expected actions are delayed, the applicability of the definition proposed in this notice could be extended in a subsequent rule.

EPA notes that the proposed requirement that all engines in an engine family class have the same type of catalyst precious metal loading would apply only to OEMs. EPA is aware that catalysts are built to the OEM's specifications, and that the actual amount and ratio of precious metals in the catalyst is often considered confidential business information that cannot be obtained by an aftermarket converter who purchases a vehicle manufactured by an OEM to convert it to operate on a clean alternative fuel. EPA believes that the remaining criteria for grouping engines into an engine family class are sufficient to ensure that vehicles and engines converted to operate on a clean alternative fuel have similar emissions characteristics and that it would be appropriate to group such vehicles and engines together. Because manufacturers can only group vehicles that are in the same car line, and have similar engine displacements, catalyst construction, etc., it is unlikely that vehicles or engines that share those common characteristics will have different catalyst precious metal loadings. In the event that EPA has reason to believe that, in spite of meeting the other criteria, an aftermarket converter is attempting to group engines with different precious metal loadings, EPA is proposing to reserve the right to limit engine family groupings by aftermarket conversion companies if the Agency has reason to believe that the proposed engine family grouping would result in an engine family class containing engine families that are so dissimilar that such grouping is not appropriate. Since the Agency's belief could be based on information that is protected by confidential business practices, EPA could not necessarily disclose this information to the aftermarket conversion company. Based on a review of engine families from previous model years, the Agency does not believe this scenario is likely to occur but has decided to propose such a provision due to the theoretical possibility of the scenario occurring in the future.

C. Fees

Today's action proposes to amend the current fee schedule in 40 CFR Part 86, Subpart J by proposing exemptions from certification fee requirements. The exemption (through MY 2001) is proposed for vehicles and engines using certified to LEV, ULEV, ILEV, or ZEV, emission standards in 40 CFR Part 88 under the small-volume certification procedures in 40 CFR 86.094–14. In addition, a fee exemption is provided through MY 2001 for dedicated gaseous fuel systems meeting Tier 1 emission standards.

The Act authorizes EPA to promulgate (and from time to time revise) regulations establishing fees to recover all reasonable costs to the Agency associated with (1) certification of new vehicles or engines under section 206(a) or under part C of Title II of the Act, (2) compliance monitoring and testing under section 206(b) or part C, and (3) in-use compliance monitoring and testing under section 207(c) of part C. Section 217 of the Act requires such fees to be consistent with the Independent Offices Appropriation Act (IOAA), 37 U.S.C. 9701 *et seq.*, and requires that the Agency's fee schedule be based on such factors as the Administrator finds appropriate, equitable, and nondiscriminatory (including the number of vehicles or engines produced under a certificate).

Pursuant to its authority under section 217, EPA established a fee schedule to recover costs associated with the activities described above. This fee schedule currently applies to light-duty vehicles, light-duty trucks, heavy-duty vehicles, heavy-duty engines, and motorcycles, regardless of the emissions standards to which such vehicles are

certified. Current EPA regulations provide for a partial fee waiver for certification requests where the full fee exceeds one percent of the aggregate projected retail sales price of vehicles that the certificate would cover. If EPA grants a waiver, the applicable fee would be equivalent to one percent of the aggregate projected retail sales price of the vehicles or engines covered by the certification request.

The first exemption proposed today is for vehicle technologies certifying to LEV, ULEV, ILEV, or ZEV emissions standards in 40 CFR 88.104–94 and 88.105–94. This proposed exemption is consistent with Section 217 of the CAA, and with the IOAA. Section 217 requires EPA's fee schedule to be based on factors that the Administrator finds are ''appropriate and equitable and nondiscriminatory.'' Section 217 also requires EPA's fee regulations to be consistent with the IOAA. The IOAA states that ''* * * [I]t is the sense of Congress that each service or thing of value provided by an agency * * * is to be self-sustaining to the extent possible.'' In addition, the IOAA authorizes agency heads to adopt regulations establishing a fee for such ''services or things of value'' provided by the agency. Such fees must be fair, and must be based on the following factors: (1) Cost to the government, (2) value of the service or thing to the recipient, (3) public policy or interest serviced, and (4) other relevant facts.

The proposed exemption from certification fees for vehicles and engines certified as LEVs, ILEVs, ULEVs, and ZEVs emission standards is consistent with the IOAA. The IOAA does not require agencies to be completely self-sustaining, but only ''to the extent possible.'' In establishing fees, it is appropriate for EPA to weigh its broad purpose under the CAA of protecting the nation's air quality against the sense of Congress that agencies should be self-sustaining to the extent possible. *See Aeronautical Radio* v. *Federal Communications Commission,* 335 F.2d. 304 (7th Cir., 1964). While EPA recognizes that the Agency would incur costs in issuing certificates for such vehicles, and in assuring compliance with the applicable emissions standards, the proposed fee exemption is consistent with Congressional intent to encourage the development and production of clean-fuel vehicles for state clean-fuel fleet programs, and with the broader long-term goal of encouraging the penetration of clean-fuel vehicles in the national vehicle market. These are valid public policy interests that may be considered as a factor in setting fees under the IOAA in a manner that furthers such interests.

The proposed fee exemption for Tier 1 alternative fuel vehicles is also consistent with Section 217 of the CAA and with the IOAA. As described above, the IOAA does not require agencies to be completely self-sustaining, but only to ''the fullest extent possible,'' and it is appropriate for EPA to weigh its broad purpose under the CAA of protecting air quality against the sense of Congress that agencies should be self-sustaining to the extent possible. While EPA recognizes that the Agency would incur costs in issuing certificates for such vehicles and in assuring compliance with the applicable emissions standards, the proposed fee exemption is consistent with EPA's broad purpose of protecting air quality. Although these vehicles would be certified to Tier 1 emissions standards, rather than to the more stringent CFV emissions standards, all fuel systems for a gaseous-fuel would have lower evaporative emissions than gasoline fueled vehicles because these fuel systems are ''closed'' fuel systems under pressure. These closed fuel systems are the only fuel systems thus far that have been able to demonstrated compliance with the lower evaporative emission standards required for ILEV evaporative emission compliance. Even though the operating fuel system on these vehicles and engines will have a fuel system that is similar to systems meeting ILEV evaporative standards, these vehicles could also have an emergency supply of conventional fuel and still qualify as dedicated vehicles if EPA finalized the proposed revisions to the definition of dedicated vehicle discussed in section C. 1. above. Lower evaporative emissions can still be expected from such vehicles because they will carry lower volumes of conventional fuel than do dedicated conventional fuel vehicles. In addition, there will be lower refueling losses because the conventual fuel is an emergency only fuel supply and will be replenished infrequently. Therefore, it would be appropriate and consistent with EPA's broad purpose of reducing emissions that result in air pollution problems for the Agency to waive certification fees for gaseous-fueled Tier 1 vehicles as a means to encourage manufacturers to produce such vehicles. Moreover, EPA expects that some CFVs purchased by fleet operators towards compliance with requirements of CFFPs will be gaseous-fueled CFVs, and encouraging production of gaseous-fueled Tier 1 vehicles would assist those fleet operators that choose gaseous-fueled CFVs by promoting and supporting the gaseous fuel fueling infrastructure.

The current fee structure is based on recovering EPA's cost for each engine family. Current regulations rules do allow for partial waiver of the full fee. This waiver requires the manufacturer to pay 1 percent of the retail value of the vehicle up to a full fee. The net result is for any engine family with expected annual sales of approximately 100 units, the manufacturers would be required to pay the full certification fee. For aftermarket conversions, however, the one percent of the retail value criterion is based on the sales price of the converted vehicle, and does not reflect the cost of procuring the pre-conversion vehicle or engine. The conversion process may add $5,000 to the vehicle's pre-conversion cost. The retail value of the converted vehicle may be anywhere from $10,000 for a LDV to $20,000 for a pickup truck. The fee the aftermarket conversion manufacturer pays is based on the total retail value of the vehicle, not just the value added. Therefore, if the retail value of the converted vehicle is $25,000 the fee under the current waiver provision would be 1 percent of $25,000, or $250. If the convertor expects to sell at least 100 converted vehicles, it would have to pay the full certification fee of $23,741.00 .

For the 1997 model year [14] EPA certified 12 engine families to LEV, ILEV, ULEV, and ZEV emission standards; three LDV's, four LDT's, and five HDE's. The total fees paid to EPA for these 12 engine families amount to less than $250,000. Since few gaseous-fueled engine families have been certified to Tier 1 emissions standards, EPA does not expect the cost of the fee waiver proposed for Tier 1 gaseous-fueled vehicles and engines would be significant. The cost of the proposed fees exemptions would not be passed on to other manufacturers.

In today's action, EPA is proposing a fee exemption for any engine family certified to Federal LEV, ILEV, ULEV, or ZEV emissions standards in 40 CFR Part 88. The proposed fee exemption, applicable through MY 2001, would be expected to result in a greater number of engine families and vehicles available for fleet operators to purchase and use to comply with the requirements of Clean-Fuel Fleet Programs. In addition, today's proposal is intended to reduce the overall burden of certifying clean-fuel vehicles and to provide additional incentive to both OEM and aftermarket converters to certify vehicles and engines that meet the CFV emission standards.

[14] As of May 30, 1997.

This proposed exemption would apply through MY 2001 because EPA expects that such incentive will not be needed after MY 2001 as the production and sales of CFVs by that time should be at a level such that the amount of fees paid to EPA can easily be amortized over the total sales. EPA would apply this exemption in an equitable, nondiscriminatory manner—any manufacturer of a small volume engine family certified to LEV, ULEV, ILEV, or ZEV emissions standards under 40 CFR Part 88 would be eligible to receive an exemption.

III. Administrative Requirements

A. Administrative Designation

Under Executive Order 12866 (58 FR 51735 (October 4, 1993)), the Agency must determine whether this proposed regulatory action is ''significant'' and therefore subject to Office of Management and Budget (OMB) review and, the requirements of the Executive Order. The order defines ''significant regulatory action'' as one that is likely to result in a rule that may:

(1) Have an annual effect on the economy of $100 million or more or adversely affect, in a material way, the economy, a sector of the economy, productivity, competition, jobs, the environment, public health or safety, or State, local, or tribal governments or communities;

(2) Create a serious inconsistency or otherwise interfere with an action taken or planned by another agency;

(3) Materially alter the budgetary impact of entitlements, grants, user fees, or loan programs or the rights and obligations of recipients thereof; or

(4) Raise novel legal or policy issues arising out of legal mandates, the President's priorities, or the principles set forth in the Executive Order.

Pursuant to the terms of Executive Order 12866, EPA has determined that this proposed action is not a ''significant regulatory action'' within the meaning of the Executive Order, and is therefore not subject to OMB review. Today's action proposes to amend current regulations to streamline the certification process for manufacturers of Clean Fuel vehicles and dual fuel gaseous fueled vehicles and engines.

B. Regulatory Flexibility

The Regulatory Flexibility Act (RFA) generally requires an agency to conduct a regulatory flexibility analysis of any rule of any rule subject to notice and comment rulemaking requirements unless the agency certifies that the rule will not have significant economic impact on a substantial number of small entities. Small entities include small business, small not-for-profit enterprises, and small governmental jurisdictions. This proposed rule would not have significant impact on a substantial number of small entities because today's proposed action would not impose any new requirements on small entities. In fact, this proposal would reduce the costs of certification for all entities, including small entities, that manufacturers of CFVs, as well as reducing costs for all entities that convert conventional vehicles to vehicles that operate on gaseous and other fuels, including small entities that perform such actions. Therefore, I certify that this action will not have a significant economic impact on a number of small entities.

C. Unfunded Mandates

Under section 202 of the Unfunded Mandates Reform Act of 1995 (''UMRA'') signed into law on March 22, 1995, EPA must prepare a written statement to accompany any rule where the estimated costs to State, local, or tribal governments, in the aggregate, or to the private sector, will be $100 million or more in any one year. Under section 205, for any rule subject to section 202, EPA must select the most cost-effective and least burdensome alternative that achieves the objective of the rule and that is consistent with statutory requirements. Section 203 requires EPA to establish a plan for informing and advising any small governments that may be significantly and uniquely impacted by the rule.

EPA has determined that this proposed rule does not trigger the requirements of UMRA. The proposed rule does not include a Federal mandate that may result in estimated annual costs to State, local, or tribal governments in the aggregate, or to the private sector, of $100 million or more, and it does not propose regulatory requirements that may significantly or uniquely affect small governments. Therefore, this proposed rule does not trigger the requirements of UMRA.

D. Reporting and Recordkeeping Requirement

Today's proposal does not impose any new information collection burden. The Office of Management and Budget (OMB) has previously approved the information collection requirements under the provisions of the Paperwork Reduction Act, 44 U.S.C. 3501 *et seq.* And has assigned OMB control number 2060–0104 (EPA ICR No. 0783).

Burden means the total time, effort, or financial resources expended by persons to generate, maintain, retain, or disclose or provide information to or for a Federal agency. This includes the time needed to review instruction; develop, acquire, install, and utilize technology and systems for the purposes of collecting, validating, and verifying information, processing and maintaining information, and disclosing and providing information; adjust the existing ways to comply with any previously applicable instructions and requirements; train personnel to be able to respond to a collection of information; search for data sources; complete and review the collection of information; and transmit or otherwise disclose the information.

Copies of the ICR document(s) may be obtained from Sandy Farmer, OPPE Regulatory Information Division; EPA; 401 M St., SW. (mail code 2137); Washington, DC 20460 or by calling (202) 260–2740. Include the ICR and/or OMB number in any correspondence.

E. Environmental and Economic Impacts

This proposal will have no adverse effects on air quality, since all current emissions standards and requirements would continue to apply to vehicles and engines affected by today's action. EPA believes that this proposed action would encourage manufacturers to develop and market vehicles and engines with innovative, new emissions control technology, ultimately resulting in broader market penetration of CFVs and clean alternative fuels.

By proposing to waive certification fees for qualifying vehicles, this proposed action would reduce the regulatory burden on industry without adversely affecting air quality.

F. Protection of Children From Environmental Health Risks and Safety Risks

This proposed rule is not subject to E.O. 13045, entitled ''Protection of Children from Environmental Health Risks and Safety Risks (62 FR 19885, April 23, 1997), because it does not involve decisions on environmental health risks or safety risks that disproportionately affect

G. Public Participation

1. Comments and the Public Docket

EPA welcomes comments on all aspects of this proposed rulemaking. All comments, with the exception of proprietary information should be addressed to the EPA Air Docket Section, Docket No. A–97–27 (see **ADDRESSES**).

Commenters who wish to submit proprietary information for

consideration should clearly separate such information from other comments by (1) labeling proprietary information ''Confidential business Information'' and (2) sending proprietary information directly to the contact person listed (see FOR FURTHER INFORMATION CONTACT) and not to the public docket. This would help insure that proprietary information is not inadvertently placed in the docket. If a commenter wants EPA to use a submission labeled as confidential business information as part of the basis for the notice of proposed rulemaking, then a non-confidential version of the document, which summarizes the key data or information, should be sent to the docket.

Information covered by a claim of confidentiality will be disclosed by EPA only to the extent allowed and by the procedures set forth in 40 CFR Part 2. If no claim of confidentiality accompanies the submission when it is received by EPA, the submission may be made available to the public without notifying the commenters.

2. Public Hearing

Any person can request EPA to hold a public hearing on this proposed action, but such request must be received by August 19, 1998. Because no hearing will occur, absent a request for one, interested parties should contact Clifford D. Tyree at the number listed below after August 19, 1998 to determine whether a hearing will take place.

IV. Statutory Authority

Authority for the actions set forth in this notice of proposed rulemaking is granted to the EPA by sections 202, 203, 206, 207, 217, 241, 242, 243, 244, 245, 246, 247, and 301(a) of the Clean Air Act as amended (15 U.S.C. 2001, 2002, 2003, 2005, 2006, 2013; 42 U.S.C. 7521, 7522, 7524, 7525, 7541, 7542, 7549, 7550, and 7601(a)).

List of Subjects in 40 CFR Part 86

Environmental protection, Administrative practice and procedure, Confidential business information, Labeling, Motor vehicle pollution, Reporting and recordkeeping requirements.

Dated: July 8, 1998.

Carol M. Browner,

Administrator.

For the reasons set out in the preamble, chapter I, title 40 of the Code of Federal Regulations is proposed to be amended as follows:

PART 86—[AMENDED]

1. The authority citation for part 86 continues to read as follows:

Authority: 42 U.S.C. 7401–7671q.

2. Section 86.090–2 of Subpart A is amended by revising the definition of ''Dedicated vehicle (or engine)'' to read as follows:

§ 86.090–2 Definitions.

* * * * *

Dedicated vehicle (or engine) means, any motor vehicle (or motor vehicle engine) engineered and designed to be operated using a single fuel. Flexible fuel vehicles and multi-fuel vehicles are not dedicated fuel vehicles. Through model year 2001, motor vehicles (or motor vehicle engines) capable of operating on a second fuel through use of one of the options listed in paragraphs (1) and (2) of this definition are dedicated vehicles (or engines):

(1) Vehicles or engines certified to Tier 1, LEV, ULEV, ILEV, or ZEV that are capable of operation on a conventional fuel for a maximum of one hour during a three-hour period.

(2) Vehicles or engines certified to Tier 1, LEV, ULEV, ILEV, or ZEV that are capable of operation on a conventional fuel no more than 50 miles on a conventional fuel limited either by fuel tank capacity or tamper-proof electronic software.

* * * * *

3. Section 86.096–24 of Subpart A is amended by revising paragraph (a)(2) introductory text and adding new paragraphs (c)(4), (c)(5), (e)(1), (i), and (j) to read as follows:

§ 86.096–24 Test vehicles and engines.

(a) * * *

(2) To be classed in the same engine family, engines must be identical in all the respects listed in paragraphs (a)(2)(i) through (x) of this section or, at the manufacturers option, as allowed in paragraphs (i) and (j) of this section.

* * * * *

(c) * * *

(4) *Light-duty vehicles and light-duty trucks applying for a certificate of conformity with Clean-Fuel vehicle emissions standards in 40 CFR part 88.* This paragraph (c)(4) applies to engines, systems, or components used to establish exhaust emission deterioration factors for light-duty vehicle and light-duty truck small volume engine families certified to LEV, ILEV, ULEV, or ZEV emissions standards in 40 CFR part 88.

(i) For light duty vehicles, the Administrator shall select the vehicles, engines, systems, or components to be used to determine exhaust emission deterioration factors for each engine family or engine family class control system combination using the criteria in paragraph (c)(1) of this section, or, alternatively, by selecting the vehicle with the largest projected sales volume in the engine family or engine family class.

(ii) For light duty trucks, the manufacturer shall select the vehicles, engines, systems, or components to be used to determine exhaust emission deterioration factors for each engine family or engine family class control system combination using the criteria in paragraph (c)(2) of this section, or alternatively, by selecting the vehicle with the largest projected sales volume in the engine family or engine family class.

(iii) For light duty vehicles, service accumulation procedures must comply with one of the following:

(A) 40 CFR 86.094–26 (a); or

(B) 40 CFR 86.094–14 (c)(7)(i)(C).

(iv) For light duty trucks, service accumulation procedures must comply with one of the following:

(A) 40 CFR 86.094–26 (b) and (d); or

(B) 40 CFR 86.094–14 (c)(7)(i)(C).

(5) *Heavy-duty engines applying for a certificate of conformity with Clean-fuel vehicle emissions standards in 40 CFR part 88.* This paragraph (c)(5) applies to engines, systems, or components used to establish exhaust emission deterioration factors for small volume heavy-duty engine families certified to LEV, ILEV, ULEV, or ZEV emissions standards in 40 CFR part 88.

(i) The manufacturer shall select the vehicles, engines, systems, or components to be used to determine exhaust emission deterioration factors for each engine family or engine family class control system combination using the criteria in paragraph (c)(3) of this section, or alternatively, by selecting the engine with the largest projected sales volume in the engine family or engine family class.

(ii) Service accumulation procedures must comply with one of the following:

(A) 40 CFR 86.094–26(c) and (d);

(B) 40 CFR 86.094–14 (c)(7)(i)(C); or

(C) The engine must be operated at maximum power and maximum fuel rate for 500 engine hours. Three tests, equally spaced, shall be used to extrapolate deterioration factors.

* * * * *

(e)(1) Any manufacturer may request to certify engine families, with combined total U.S. sales of vehicles and engines fewer than 10,000 units, for the model years 1999 through 2001, to the clean-fuel vehicle standards prescribed in 40 CFR 88.104–94 and

88.105–94, under the provisions of § 86.094–14, in addition to the vehicles certified under paragraph (e)(2) of this section.

* * * * *

(i) For light duty vehicles and light duty trucks, small volume engine families certified to LEV, ULEV, ILEV, or ZEV emissions standards in 40 CFR part 88 may be grouped into an engine family class, provided that:

(1) For original equipment manufacturers, the following criteria are met:

(i) Vehicles are all certified to the same emissions standards prescribed in 40 CFR 88.104–94.

(ii) The maximum range of engine displacement is less than or equal to 0.8 liters of the largest displacement in the class.

(iii) Same type of catalyst (e.g., beads or monolith).

(iv) Same precious metal composition of the catalyst by the type of principle active material(s) used (e.g., platinum based oxidation catalyst, palladium based oxidation catalyst, platinum and rhodium three-way catalyst, palladium and rhodium three-way catalyst).

(v) The ratios of [(catalysts volume/displacement) × (catalyst loading rate)] of all catalysts is within 25 percent or 0.2 g/liter of each other.

(2) For aftermarket conversions, the following criteria are met:

(i) Vehicles are all certified to the same emissions standards prescribed in 40 CFR 88.104–94.

(ii) The maximum range of engine displacement is less than or equal to 0.8 liters of the largest displacement in the class.

(iii) Same type of catalyst (e.g., beads or monolith).

(iv) All carlines or engine models were included on the certificate for the pre-conversion configuration.

(3) Vehicles certifying to more than one set of emission standards specified in this paragraph (i) may be grouped into a single engine family class, as provided in paragraphs (i)(1) and (i)(2) of this section. For example, a manufacturer may certify a vehicle to both ULEV and ILEV standards, or to both ZEV and ILEV standards.

(j) For heavy duty engines, small volume engine families certified to LEV, ULEV, or ZEV emissions standards in 40 CFR 88.105–94 may be grouped into an engine family class, provided that:

(1) For original equipment manufacturers, the following criteria are met:

(i) The engines meet the requirements of paragraphs (a)(2)(iv) through (a)(2)(x) of this section.

(ii) The maximum range of engine displacement is less than or equal to 0.8 liters of the largest displacement in the class.

(iii) Same type of catalyst (e.g., beads or monolith).

(iv) Same precious metal composition of the catalyst by the type of principle active material(s) used (e.g., platinum based oxidation catalyst, palladium based oxidation catalyst, platinum and rhodium three-way catalyst, palladium and rhodium three-way catalyst).

(v) The ratio of [(catalysts volume/displacement)] × [catalyst loading rate] of all combinations is within 25% or .2 g/liter.

(2) For aftermarket conversions, the following criteria are met:

(i) The maximum range of engine displacement is less than or equal to 0.8 liters of the largest displacement in the class.

(ii) Same type of catalyst (e.g., beads or monolith).

(iii) All carlines or engine models were included on the certificate for the pre-conversion configuration.

4. Section 86.099–2 is added to subpart A to read as follows:

§ 86.099–2 Definitions.

The definitions of § 86.098–2 continue to apply to 1998 and later model year vehicles. The definitions listed in this section apply beginning with the 1999 model year.

Engine Family Class means:

(1) A grouping of vehicles or engine families that meets the following criteria:

(i) Dedicated vehicles or engines that meet LEV, ILEV, ULEV, or ZEV emission standards in 40 CFR 88.104–94 or 88.105–94.

(ii) The maximum range of engine displacement is not more than 0.8L of the largest displacement tested in the class.

(iii) Same type of catalyst.

(iv) Same principle active precious metal.

(v) The ratios of [(catalysts volume/displacement) × (catalyst loading rate)] of all catalysts is within 25 percent or 0.2 g/liter of each other.

(vi) For aftermarket conversions, all carlines or engine models were included on the certificate for the pre-conversion configuration.

(2) This definition is applicable for model years 1999 through 2001.

5. Section 86.908–93 of Subpart J is amended by adding paragraph (d) to read as follows:

§ 86.908–93 Waivers and refunds.

* * * * *

(d)(1) For model years 1999 through 2001, the required fees under this subpart shall be waived for any light-duty vehicle, light-duty truck, or heavy-duty engine family that meets the following requirements:

(i) Is a dedicated vehicle or engine;

(ii) Is seeking certification to LEV, ILEV, ULEV, or ZEV emissions standards in 40 CFR part 88; and

(iii) Meets the small volume sales requirements of § 86.094–14(b) or § 86.094–24(e).

(2) If the manufacturer does not receive a certificate of conformity with the LEV, ILEV, ULEV, or ZEV emissions standards in 40 CFR part 88, the fee requirements of this section will apply. Before any certificate can be issued, the applicable fee must be paid.

[FR Doc. 98–18860 Filed 7–17–98; 8:45 am]

BILLING CODE 6560–50–P

FEDERAL COMMUNICATIONS COMMISSION

47 CFR Part 69

[CC Docket No. 98–77; FCC 98–101]

Access Charge Reform for Incumbent Local Exchange Carriers Subject to Rate-of-Return Regulation

AGENCY: Federal Communications Commission.

ACTION: Notice of proposed rulemaking.

SUMMARY: By this *Notice of Proposed Rulemaking (NPRM)*, the Commission commences a proceeding to reform access charge rules applicable to incumbent local exchange carriers (LECs) subject to rate-of-return regulation. The *NPRM* seeks comment on proposals to establish a transition to access charges that more closely reflect economic costs, with a goal of making our system of interstate access charges compatible with a competitive paradigm. Specifically, the Commission seeks comment on proposals to revise the switched access rate structure for rate-of-return LECs. The Commission also solicits comments on some additional issues relating to the regulation of interstate access services of rate-of-return LECs.

DATES: Comments are due on or before August 17, 1998, and reply comments are due on or before September 17, 1998. Written comments and reply comments by the public on the proposed information collections are due August 17 and September 17, 1998, respectively.

ADDRESSES: Federal Communications Commission, Secretary, Room 222, 1919 M Street N.W., Washington, DC 20554. In addition to filing comments with the

Commission's Secretary, a copy of any comments on the proposed information collections contained herein should be submitted to Judy Boley, Federal Communications Commission, Room 234, 1919 M Street N.W., Washington, DC 20554, or via the Internet to jboley@fcc.gov, and to Timothy Fain, OMB Desk Officer, 10236 NEOB, 725 17th Street N.W., Washington, DC 20503, or via the Internet to fain__t@al.eop.gov.

FOR FURTHER INFORMATION CONTACT: Douglas L. Slotten, Common Carrier Bureau, Competitive Pricing Division, at (202) 418–1572. For additional information concerning information collections, contact Judy Boley at (202) 418–0214, or via the Internet at jboley@fcc.gov.

SUPPLEMENTARY INFORMATION: This is a summary of the Commission's *NPRM* in the matter of Access Charge Reform for Incumbent Local Exchange Carriers Subject to Rate-of-Return Regulation, CC Docket 98–77, adopted May 26, 1998, and released June 4, 1998. The complete text of this *NPRM* is available for inspection and copying during normal business hours in the Commission's Reference Center, Room 239, 1919 M Street N.W., Washington, DC. In addition, the *NPRM* is available through the Internet at http://www.fcc.gov/Bureaus/Common__Carrier/Notices/1998/fcc98101.wp. The complete text may be purchased from the Commission's duplicating contractor, International Transcription Service, Inc. (ITS, Inc.), at 1231 20th Street N.W., Washington, DC 20036 (202–857–3800).

Paperwork Reduction Act

This *NPRM* contains either proposed or modified information collections. As part of our continuing effort to reduce paperwork burdens, we invite the general public and OMB to take this opportunity to comment on any additional information collections contained in this NPRM, not previously approved by OMB, as required by the Paperwork Reduction Act of 1995, Pubic Law 104–13. Public and agency comments and reply comments are due August 17 and September 17, 1998, respectively. Written comments by the Office of Management and Budget on the proposed information collections are due September 18, 1998. Comments should address: (a) Whether the proposed collection of information is necessary for the proper performance of the functions of the Commission, including whether the information shall have practical utility; (b) the accuracy of the Commission's burden estimates; (c) ways to enhance the quality, utility, and clarity of the information collected; and (d) ways to minimize the burden of the collection of information on the respondents, including the use of automated collection techniques or other forms of information technology.

OMB Control No.: None.

Title: Access Charge Reform for Incumbent Local Exchange Carriers Subject to Rate-of-Return Regulation—CC Docket No. 98–77.

Form No.: N/A.

Respondents: Business or other for-profit entities.

Type of Review: New collection.

Proposed collection	Number of respondents	Estimated time per response (annual)	Total annual burden
Cost Study for Local Switching Port Costs	155	400 Hours	62,000 Hours.
Tariff Filing	51	200 Hours	10,200 Hours.
New Services Requirement	10	10 Hours	100 Hours.

Frequency of Response: One-time requirement, on occasion.

Total Annual Burden: 72,300 Hours.

Estimated Costs Per Respondent: $600 per respondent.

Needs and Uses: The Commission commences a proceeding to reform access charge rules applicable to incumbent local exchange carriers (LECs) subject to rate-of-return regulation. We propose to require rate-of-return LECs to conduct cost studies to determine the geographically-averaged portion of local switching costs that is attributable to the line-side ports and to dedicated trunk-side ports, to be filed with the tariffs implementing these changes. The Commission also proposes to allow rate-of-return carriers to file a petition for new services based on a public interest standard. The information will be used to determine whether the incumbent LECs should receive the regulatory relief proposed in the *NPRM*. The information collections are necessary to implement the Telecommunications Act of 1996.

Synopsis of Notice of Proposed Rulemaking

1. Access reform is one of a series of actions that collectively are intended to foster and accelerate the introduction of efficient competition in all telecommunications markets, pursuant to the mandate of the 1996 Telecommunications Act (1996 Act). In the *Access Charge Reform Order,* we set in motion the forces of competition and deregulation in local telecommunications markets served by incumbent LECs subject to price cap regulation. *Access Charge Reform*, CC Docket No. 96–262, First Report and Order, 12 FCC Rcd 15982 (1997), 62 FR 31868 (June 11, 1997) (*Access Charge Reform Order*); Order on Reconsideration, 12 FCC Rcd 10119 (1997), 62 FR 40460 (July 29, 1997); *appeal pending sub nom. Southwestern Bell Tel. Co.* v. *FCC,* No. 97–2618 (and consolidated cases) (8th Cir. argued Jan. 15, 1998); Second Order on Reconsideration, 12 FCC Rcd 16606 (1997), 62 FR 56121 (October 29, 1997) (*Second Reconsideration Order*). The 1996 Act, however, expressly provides that ''Consumers in all regions of the Nation . . . should have access to telecommunications and information services . . . that are reasonably comparable to those services provided in urban areas and that are available at rates that are reasonably comparable to rates charged for similar services in urban areas.'' 47 U.S.C. 254(b)(3). With this *NPRM,* we commence a further proceeding on access reform to mobilize the same forces to serve the interests of consumers located in those rural and suburban areas that are served by incumbent LECs subject to rate-of-return regulation. The first step in this reform process is to enable these rate-of-return LECs to assess interstate access charges that are more consistent with principles of cost-causation and economic efficiency.

2. With this *NPRM,* we continue the process of reforming the access charge rate structure for rate-of-return LECs that was begun in the *Access Charge Reform Order* with the modifications to the transport rate structure, the reallocation of costs in the transport interconnection charge (TIC), and the amendments reflecting the changes necessary to implement universal service reform. In doing so, we intend to build on the analysis of the access charge rate structure developed in the *Access Charge Reform Order.* While rate-of-return LEC costs generally may be higher than price cap LEC costs due to longer loops or lower economies of

scale, the two groups of carriers incur costs in the same manner, and similar economic principles should apply. Subject to receiving evidence showing that differences exist between price cap LECs and rate-of-return LECs that require different rules to achieve the goal of fostering an efficient, competitive marketplace, we propose to amend the access charge rules for rate-of-return LECs in a manner similar to that adopted for price cap LECs.

3. We recognize that differences in the circumstances of rate-of-return and price cap LECs may require different approaches to reform, including a different transition to more economically efficient, cost-based interstate access charges. We seek to ensure that, at the end of the transition, all Americans enjoy the benefits of competition. By varying the transitional mechanisms, we can ensure that the process of getting to those benefits is as smooth as possible.

In this *NPRM* we propose to reform the access charge rate structure of rate-of-return LECs. We address many of the most fundamental economic inefficiencies in the current structure and will lay a foundation on which to develop further initiatives for rate-of-return LECs, including the rural LECs, most of whom are subject to rate-of-return regulation. In a subsequent phase of this proceeding, we intend to address the very difficult question of when, and how much, additional pricing flexibility should be afforded to rate-of-return LECs. We also intend to address, in a future proceeding, alternative forms of regulation for LECs currently subject to rate-of-return regulation. Such alternative regulatory structures could offer incentives to rate-of-return LECs that are able to become more efficient.

5. The *Access Charge Reform Order*, including subsequent reconsideration and waiver orders, and the *Universal Service Order*, made the modifications necessary to implement the revisions to the universal service support mechanisms adopted in the *Universal Service Order. Federal-State Joint Board on Universal Service*, CC Docket No. 96–45, First Report and Order, 12 FCC Rcd 8776 (1997), 62 FR 32862 (June 17, 1997) (*Universal Service Order*). This *NPRM* is not intended to address contentions that some additional costs or services should receive universal service support; those matters will be resolved in the Universal Service proceeding. We note that the Commission has determined that there shall be no change in the existing high cost support mechanisms for rural LECs until January 1, 2001, at the earliest. This means that, in the interim, the amount of universal service support for rural LECs will be maintained initially at existing levels and should increase in accordance with specified factors, such as inflation, that have historically guided changes in such support.

6. *Common Line Costs.* Currently, rate-of-return LECs' subscriber line charges (SLCs) are limited to recovering the lesser of the actual cost of the interstate portion of the local loop, or $3.50 per month for residential and single line business customers, or $6.00 per month for multi-line business customers. Any remaining common line costs are recovered through carrier common line (CCL) charges, which are per-minute charges imposed on interexchange carriers (IXCs).

7. We tentatively conclude that we should adopt rate structure modifications for rate-of-return LECs that are similar to those that were adopted for price cap LECs in the *Access Charge Reform Order.* We seek comment on the applicability of the rate structure modifications adopted for price cap LECs to rate-of-return LECs. Specifically, the Commission proposes to permit rate-of-return LECs to adjust their SLC ceilings on non-primary residential and multi-line business lines to the level necessary to recover their average per-line interstate-allocated common line costs, subject to an inflation-adjusted $9.00 ceiling, while leaving the existing SLC ceiling of $3.50 for primary residential and single-line business lines at its current level.

8. To ameliorate possible adverse impacts of an immediate SLC adjustment for non-primary residential lines, the Commission proposes to adjust the SLC ceilings for these lines gradually. The Commission seeks comment on adjusting the monthly SLC ceiling initially to the LEC's average per-line interstate-allocated costs, but not exceeding $1.50 more than the current SLC ceiling. Annually thereafter, rate-of-return LECs could adjust the monthly SLC ceiling for these lines for inflation and could increase the ceiling by $1.00 per line, until the SLC ceiling for non-primary residential lines is equal to the SLC ceiling permitted for multi-line business lines.

9. To the extent that SLC ceilings prevent rate-of-return LECs from recovering their allowed common line revenues from end users, the Commission proposes to permit these LECs to recover the shortfall, subject to a maximum charge, through a presubscribed interexchange carrier charge (PICC), a flat, per-line charge assessed on the end-user's presubscribed interexchange carrier. For the first year, the proposed ceiling on the PICC will be $1.50 per month for non-primary residential lines and $2.75 per month for multi-line business lines. The Commission proposes adjusting the PICC for price cap non-primary residential and multi-line business lines annually for inflation and increasing the PICCs for non-primary residential and multi-line business lines by a maximum of $1.00 and $1.50 per year, respectively, until price cap LECs recover all their permitted common line revenues through a combination of flat-rated SLC and PICCs. The Commission also invites comment on whether the PICC for primary residential and single-line business lines should be capped at $0.53 per month for the first year, and adjusted annually thereafter for inflation, and increase by $0.50 per year, until it equals one twelfth of the sum of the annual per-line common line cost and residual interconnection charge cost permitted under our rate-of-return rules, divided by the projected average number of local exchange service subscriber lines in use during such annual period, less the maximum primary residential and single-line business lines SLC computed pursuant to our rules. If a customer does not designate a presubscribed interexchange carrier, the Commission proposes to permit rate-of-return LECs to collect directly from the customer the PICC that could otherwise be assessed against the presubscribed interexchange carrier.

10. To the extent that the SLC ceilings on all lines and the PICC ceilings on primary residential and single-line business lines prevent recovery of the full common line revenues permitted by the rate-of-return rules, the Commission proposes to permit rate-of-return LECs to recover the shortfall through a per-minute residual CCL charge. The Commission proposes that rate-of-return LECs should assess the residual CCL charge initially on originating minutes, subject to a rate cap, with any residual being collected through a per-minute terminating CCL charge. Rate-of-return LECs would, under the Commission's proposal, be allowed to assess an originating CCL charge that, when added to the sum of local switching charges, the per-minute residual TIC, and any per-minute charges related to marketing expenses, does not exceed the sum of local switching charges, the per-minute CCL charge, and TIC assessed on originating minutes on December 31, 1997. A per-minute residual TIC could also be assessed on IXCs by rate-of-return LECs to recover any TIC costs not recovered through facility-based charges. The originating residual TIC charge would be subject to the same

ceiling mechanism as the residual CCL charge.

11. Under the Commission's proposal, the per-minute residual CCL and residual TIC charges will be eliminated as the PICC ceilings increase. After the residual CCL and the residual TIC charges are eliminated, increases in the PICC for primary residential and single-line business lines will reduce the PICCs on non-primary residential and multi-line business lines by an amount that corresponds to the total increases in PICCs for primary residential and single-line business lines. Reductions will be targeted to the PICCs on multi-line business lines until the PICCs for those lines are equal to the PICCs for non-primary residential lines. Thereafter, reductions will be applied to both classes of customers equally until the combined SLCs and PICCs for primary residential and single-line business lines recover the full average per-line common line costs permitted under our rules, and the additional PICCs on non-primary residential and multi-line business lines no longer recover common line costs. Under the proposal, certain TIC costs and marketing expenses, in addition to common line costs, will be recovered through non-primary residential line and multi-line business PICCs, even though SLCs and PICCs for primary residential and single-line business lines only recover the average per-line common line costs permitted under our rules.

12. We conclude that modifications similar to those we made for price cap LECs are needed to remove implicit subsidies and ensure that charges more accurately reflect the manner in which the costs are incurred, thereby promoting competition. We acknowledge that certain rate-of-return LECs, especially those in rural and insular areas, face different market conditions and incur higher costs than do many price cap LECs due to the lack of economies of scale that result from low subscriber density and small exchanges that characterize rural areas. Smaller LECs serving more costly areas, however, will receive universal service support based on their embedded costs until the Commission, with the Universal Service Joint Board's assistance, develops an appropriate model to ensure that rural carriers receive support at a level that will enable them to provide supported services at affordable rates. Adopting the same rate structure approach for rate-of return LECs, therefore, most likely will not align rates with costs as quickly as it will for price cap LECs. For many rate-of-return companies, especially those located in rural and insular areas, longer loops and difficult terrain result in average loop costs that significantly exceed the average loop costs of price cap LECs. The cost recovery mechanism for price cap LECs contemplates that price cap LECs will be able to recover all of their interstate-allocated common line costs through a combination of SLCs and PICCs, reducing the CCL charge to zero in a relatively short amount of time.

13. If rate-of-return LECs were to implement the revised common line rate structure applied to price cap LECs, multi-line business PICCs and CCL charges would often go to their respective ceilings and remain higher than those of price cap LECs for the foreseeable future, because rate-of-return LEC common line costs are significantly higher than those of price cap LECs. If we direct rate-of-return LECs to recover certain switching, marketing, and residual TIC costs through the common line SLCs and PICCs, per-line common line costs will increase further. Under this scenario, the SLCs and/or PICCs for many rate-of-return LECs would have to be adjusted to a level that would be higher than the ceilings we adopted for price cap LECs if significant reductions in the CCL rate were desired. We solicit comment on this analysis.

14. We ask interested parties to discuss how we should determine appropriate SLC ceilings. Several entities have expressed concern that the immediate SLC increases to $9.00 for non-primary or multi-line business lines will create a large disparity between SLCs charged by rate-of-return LECs and neighboring price cap LECs, and that under the 1996 Act and applicable state laws, the lower-cost price cap carriers will be able to ''cherry pick'' the high volume business customers of the higher priced rate-of-return LECs. These entities urge the Commission to grant them pricing flexibility and propose that SLCs be set based on the national average or on the neighboring price cap LEC's average SLC.

15. We invite comment on establishing a ceiling that is based on the neighboring price cap LEC's average multi-line business SLC, or on the national average. In addition, in some cases, as the non-primary SLC cap increases, the disparity between the $3.50 SLC for primary residential lines and the SLC for non-primary residential lines will most likely be greater for rate-of-return carriers than it is for price cap companies. Would this disparity warrant a different approach for rate-of-return carriers' non-primary residential lines than we adopted for price cap LECs?

16. Interested parties should discuss whether the PICC is an effective cost recovery mechanism for rate-of-return LECs' common line costs and, if so, to what extent the PICCs and CCL charges for rate-of-return LECs should be comparable to those of price cap LECs. If commenters believe that the plan we adopted in the *Access Charge Reform Order* would not produce the expected economic benefits for rate-of-return LECs and their customers, interested parties should submit alternative plans. For example, should we prescribe higher ceilings for PICCs that would permit rate-of-return LECs to reduce their CCL rates to levels comparable to those of price cap LECs? Alternatively, should we prescribe a maximum CCL charge and eliminate the PICC ceiling to allow rate-of-return LECs to recover the shortfall through flat-rated charges? In addition, in light of the higher common line costs incurred by many rate-of-return LECs, and because, if adopted, other modifications proposed in this *NPRM* will require rate-of-return LECs to recover certain switching, marketing, and TIC costs through the common line recovery mechanism, we invite parties to discuss whether we should permit these carriers to recover relatively more of the common line revenue requirement through terminating minutes. Given that local switching per-minute rates will be reduced significantly by the inclusion of dial equipment minutes (DEM) weighing in universal service support, we ask interested parties to discuss whether a higher per-minute CCL charge in the short run is unsatisfactory.

17. Interested parties should also discuss the extent to which, for purposes of assessing SLCs and PICCs, residential and business lines should be treated differently. For example, should non-primary residential lines be assessed lower PICCs than multi-line business lines and phased in over time, as we did for price cap LECs, or should we permit the SLCs for non-primary residential lines to increase more rapidly for rate-of-return LECs than for price cap LECs, in order to allow carriers in high-cost areas to reduce their CCL charge more rapidly than would otherwise be possible with graduated increases in the SLC? Alternatively, should a uniform PICC be applied to all non-primary residential and business lines to spread the revenue requirement evenly across these classes of customers?

18. In the *Second Reconsideration Order* in the Access Charge Reform proceeding, we concluded that with

respect to the PICC, Centrex customers should be treated similarly to PBX customers, because the two arrangements are functionally equivalent. Accordingly, we determined that Centrex lines should be assessed PICCs using a 9:1 line-to-trunk equivalency ratio, except where the multi-line business SLC ceiling does not permit the recovery of all interstate-allocated loop costs from the end user. In those instances, a PICC that includes the difference between the per-line loop cost and the multi-line business SLC cap, subject to the multi-line business PICC ceiling, will be assessed on Centrex lines. We seek comment on the applicability of this approach and of the 9:1 ratio to rate-of-return LECs. Parties proposing different ratios should submit data supporting the ratio they propose.

19. We also seek comment on how the 1996 Act will affect the development of competition in areas served by small and rural rate-of-return LECs. While the entry of competitors in many rate-of-return LEC service areas may be delayed due to the provisions of 47 CFR 251(f), entry in these areas will likely occur in time. Specifically, section 251(f)(1) provides an exemption for certain rural telephone companies from the duties of local exchange carriers enumerated in section 251(c), including but not limited to the duties to interconnect, to provide access to network elements on an unbundled basis, and to resell telecommunications services. Section 251(f)(2) provides a mechanism by which local exchange carriers with fewer than two percent of the nation's subscriber lines may petition the state for suspension or modification of some of the duties imposed by the Act on local exchange carriers. We ask interested parties to discuss the impact of these statute sections and the development of competition as they relate to the rate structure and transition mechanism we are proposing in this *NPRM*.

20. We also seek comment on whether we should adopt one approach for all rate-of-return LECs or whether our approach should vary depending on size, population density, topography, or other factors that may vary among rate-of-return LECs. Are there concerns that are specific to National Exchange Carrier Association (NECA) pooling companies that warrant separate treatment? Interested parties should address the specific issues raised and submit proposals for modifications that are consistent with the goals of the 1996 Act. Interested parties should also propose a time frame for adopting modifications to the rate structure. Should modifications adopted become effective immediately or should they be phased in over time? Finally, parties should address the extent to which options proposed affect small business entities, including small incumbent LECs and new entrants.

21. *Assessment of SLCs and PICCs on Derived Channels.* We propose to adopt similar SLCs and PICCs for integrated services digital network (ISDN) service offered by rate-of-return LECs. Specifically, we propose to permit rate-of-return LECs to charge SLC and PICC rates for Primary Rate Interface (PRI) ISDN service equal to five times the rate-of-return LEC's multi-line business SLC and PICC, and SLC and PICC rates for Basic Rate Interface (BRI) ISDN service equal to the rate-of-return LEC's non-primary residential line SLC and PICC. We seek comment on these conclusions and invite parties to comment on the impact that assessing SLCs and PICCs on ISDN lines will have on rate-of-return carriers and their customers. Parties should address whether the cost relationship between ISDN and analog service provided by rate-of-return LECs is similar to that of price cap LECs; if they believe it is not, they should submit specific data supporting their position. We also invite parties to discuss the relationship between proposed modifications to the common line rate structure and our tentative conclusion to treat rate-of-return LECs' ISDN lines in the manner discussed above.

22. *Local Switching Dedicated Facilities.* The interstate portion of local switching costs is currently recovered through per-minute local switching charges levied on IXCs, even though a significant portion of local switching costs is associated with ports and appears to be driven by the number of lines or trunks connected to the switch, not by the number of minutes of traffic routed by the switch. We propose to require rate-of-return LECs to reassign all costs for line-side ports, including the line card, protector, and main distribution frame, from the local switching category to the common line category, for recovery through the common line rate structure. We seek comment on this proposal. We ask if there are any specific factors for rate-of-return LECs that would preclude our adoption of this rate structure change at this time.

23. We propose to require rate-of-return LECs to conduct cost studies to determine the geographically-averaged portion of local switching costs that is attributable to the line-side ports and to dedicated trunk-side ports, to be filed with the tariffs implementing these changes. We solicit comment on this cost study proposal. In the alternative, commenters are requested to suggest a substitute mechanism to identify and assign costs to line-side ports or to trunk-side ports.

24. We also propose to require rate-of-return LECs to recover dedicated trunk port costs through a flat-rated trunk port charge assessed on the purchaser of the dedicated trunk terminating at the port. Analog switches require a voice-grade interface on the trunk-side of the end office switch, thereby requiring DS1 transport trunks to be demultiplexed into individual voice-grade circuits before being switched at analog end office switches. DS1/voice-grade multiplexers perform this function. A digital switch port includes the DS1/voice-grade multiplexing function. In addition, we propose to establish a separate rate element through which rate-of-return LECs can recover on a flat-rated basis the additional costs of DS1/voice grade multiplexers required in conjunction with terminating dedicated trunks at analog switches that were reassigned from the TIC. We ask whether the benefits to be gained from a more efficient, cost-causative rate structure outweigh the burden on rate-of-return LECs of establishing these new rate elements. In addition, we solicit suggestions as to what specific modifications of the part 69 cost allocation rules we should make to implement any rate structure changes for dedicated local switching facilities.

25. Common line charges will recover the cost of a line port used to provide basic, analog service, even when the end user has another form of service. For some services, such as ISDN, the cost of a line port is significantly more than the cost of a line port associated with a basic, analog line. We propose to permit rate-of-return LECs to assess a separate, monthly, flat-rated charge directly on end users of such services, to recover the amount by which the cost of a line port for ISDN, or the cost of a line port associated with other services, exceeds the cost of a line port for basic, analog service. We request comment on this proposal.

26. *Local Switching Shared Facilities.* We seek comment on our tentative conclusion that rate-of-return LECs adhere to a per-minute rate structure for shared local switching facilities, including the central processing unit, switching matrix, and shared trunk ports. Under this approach, the shared trunk ports and any associated DS1/voice grade multiplexers required at analog local switches will be assessed on a per-minute basis, separate from the charge for the switch itself. We ask whether there are any factors inherent to

rate-of-return LECs that should lead us to change this tentative conclusion.

27. *Call Setup Charge.* We propose to permit, but not require, rate-of-return LECs to establish a charge for call setup, the process of establishing a transmission path over which a phone call will be routed. Costs for call setup using SS7 are incurred primarily on a per-call rather than a per-minute basis. Under this proposed revision to 47 CFR 69.106, a rate-of-return LEC could elect to establish a separate per-call setup charge assessed on IXCs for all originating interstate calls handed off to the IXC's point of presence (POP), and on all terminating interstate calls that are received from an IXC's POP, whether or not a call is completed. We invite comment on this proposal for an optional call setup charge, including specific language to modify our part 69 cost allocation rules to implement this rate structure change. Moreover, if a rate-of-return LEC elects to recover revenue requirements through a call setup charge, we tentatively conclude that this charge cannot overlap with any other local switching charges, with charges for dedicated SS7 facilities, or with other signalling charges. We request comment on our tentative conclusion prohibiting double recovery for call setup charges by rate-of-return LECs. Commenters also should suggest mechanisms that would prevent any double recovery for rate-of-return LECs.

28. It would be extremely difficult to segregate the costs of the switch central processing unit and other traffic-sensitive costs into per-message and per-minute portions and to verify that the allocation has been done properly. Therefore, we propose to limit the costs that a rate-of-return LEC may recover through call setup charges to those associated with signalling. We request comment on this proposal. We seek comment on how call setup costs are affected by whether multifrequency (MF) signalling or SS7 signalling is employed. We also request estimates of the percentage of the total costs of a typical call that are represented by call setup costs. To facilitate our comparison of the estimates submitted, we request that commenters use an average call duration of 3.86 minutes, which we used as the call duration in our analysis in the *Access Charge Reform Order.*

29. *Tandem-Switched Transport Issues.* We request comment on our analysis that we should require rate-of-return LECs to recover the costs of trunk ports used to terminate dedicated trunks on the serving wire center (SWC) side of the tandem switch through flat-rated charges assessed on the purchaser of the dedicated trunk terminated at the trunk port on the SWC side of the tandem switch. To ease the burdens of implementing this unbundling, we propose to permit rate-of-return LECs to use the dedicated trunk port rates at the local switch to establish this unbundled charge. We ask for comment on this proposal. With regard to shared facilities at the tandem switch, we solicit comment on our tentative conclusion that there is no need to create a separate charge for shared trunk ports on the end-office-side of the tandem switch because this trunk port cost is included in the charge for the tandem switch and there is no reason to charge separately for shared trunk ports in the tandem switching context.

30. We also propose to require rate-of-return LECs to establish separate rate elements to recover the costs of multiplexing equipment on each side of the tandem switch that were reassigned to tandem switching from the TIC in the *Access Charge Reform First Reconsideration Order.* The rates for multiplexers on the SWC side of the tandem switch would be flat rated because they are dedicated to a single IXC. The rates for the multiplexers on the end office side of the tandem switch would be per-minute charges because these multiplexers are shared among all users of common transport. To simplify the implementation process for rate-of-return LECs, we propose to permit them to use multiplexer rates already established in their special access tariff for similar multiplexers. We request comment on these proposals. These provisions cover DS1/voice grade multiplexers used with analog tandem switches, as well as other multiplexers that are not included in transport rates.

31. *Outstanding Transport Interconnection Charge Issues for Rate-of-Return LECs.* Although the Commission in the *Access Charge Reform Order* directed rate-of-return LECs to make specified cost reallocations from the TIC to other facilities-based rate elements, thereby reducing the amount in the TIC, the reallocation of costs from the TIC to other rate elements will not remove all of the costs from the TIC, leaving a residual TIC. We propose to incorporate the residual TIC in the common line pricing structure of rate-of-return LECs, just as we did for price cap LECs. This will put in place a mechanism that will, at different times for different rate-of-return LECs, begin the process of transferring TIC costs to other rate elements. We ask for comment on this analysis and on our proposal to adopt a similar rate structure to that we employed for price cap LECs.

32. The *Access Charge Reform Order* reduces the TIC for price cap LECs by targeting certain price cap index (PCI) reductions to reducing the TIC. Price cap LECs will target price cap productivity (X-factor) adjustments to the trunking basket's PCI, and therein to the TIC service band index (SBI), thus reducing the amounts recovered through the residual TIC and effectively spreading those residual TIC revenues among the universe of access services. We ask whether any comparable mechanism exists for rate-of-return LECs that would eliminate the residual TIC in a reasonable time. We ask commenters whether it would be practical to spread the residual TIC proportionately over the other access elements in a manner comparable to that of targeting price cap productivity reductions to the TIC. We seek comment on what would be a reasonable time in which to accomplish such a reallocation. We ask parties supporting such an approach to propose cost allocation rules to implement their approach. Parties presenting data to quantify amounts in the residual TIC should include sufficient detail to permit the Commission and interested parties to evaluate the procedures used and to adjust the results, if necessary, to address concerns raised by the record. We seek comment on how these approaches affect small business entities, including small incumbent LECs and new entrants.

33. We ask parties to address whether there are additional causes of costs remaining in the residual TIC for rate-of-return LECs that have not been identified previously that would justify further reallocations of costs from the TIC. Parties identifying such costs should indicate the other element(s) to which these additional costs should be reallocated. We invite parties to comment on whether any public policy reasons would support retaining some costs of rate-of-return LECs in the residual TIC indefinitely. We ask parties to address the competitive implications of waiting for completion of a Joint Board review of separations procedures to determine which, if any, of the costs in the TIC reflect the higher cost of providing transport services in less densely populated areas, as compared with the costs underlying transport rates that were derived from special access rates. *See Jurisdictional Separations Reform and Referral to the Federal-State Joint Board,* CC Docket No. 80–286, Notice of Proposed Rulemaking, 12 FCC Rcd 22120 (1997), 62 FR 59842 (November 5, 1997).

34. *Signalling System Seven (SS7).* SS7 is the international standard

network protocol currently used to establish and close transmission paths over which telephone calls are carried. Once the reallocation of SS7 costs included in the TIC is completed, most, if not all, of SS7 costs presumably will be recovered through the local switching charge. We invite comment on our proposal to continue the existing rate structure for SS7 cost recovery by rate-of-return LECs, and to permit these LECs to adopt the rate structure for SS7 services that we approved in *Ameritech Operating Companies Petition for Waiver of Part 69 of the Commission's Rules to Establish Unbundled Rate Elements for SS7 Signalling*, Order, 11 FCC Rcd 3839, 3841 (Com. Car. Bur. 1996). The rate structure established by Ameritech pursuant to that waiver recovers costs through four unbundled charges for the various functions performed by SS7 networks: (1) Signal link; (2) STP port termination; (3) signal transport; and (4) signal switching. We also solicit additional, alternative SS7 rate structure proposals for rate-of-return LECs. Any comments on this issue should include an assessment of the expense of requiring rate-of-return LECs to install equipment in their networks for metering SS7 traffic. Would the streamlined waiver petition procedure we propose pursuant to section 69.4(g) be preferable as a means to address alternative SS7 rate structures proposed by rate-of-return LECs?

35. We recognize that some call setup is still performed using in-band, MF signalling, rather than out-of-band signalling systems such as SS7. SS7 signalling may be less prevalent for rate-of-return LECs than for price cap LECs. Any determination we make concerning a SS7 rate structure for rate-of-return LECs could be affected by the extent that rate-of-return LEC networks use SS7. We also ask parties to comment on the need for revisions to the cost allocation rules in part 69 to accommodate the provision of SS7 signalling in accordance with the provisions of the Ameritech SS7 waiver.

36. *General Support Facilities Costs.* To the extent that rate-of-return LECs' costs are underallocated to the billing and collection category, rate-of-return LECs' regulated services are recovering costs associated with unregulated services through interstate access charges. We solicit comment on our tentative conclusion that we should modify 47 CFR 69.307 for rate-of-return LECs to allocate general support facilities (GSF) costs related to billing and collection services to the billing and collection category. For rate-of-return LECs that maintain accounts below the summary account level, we propose the use of a general expense allocator to apportion the interstate share of Accounts 2111 (Land), 2121 (Buildings), 2123 (Office Equipment), and 2124 (General Purpose Computers) between: (1) The billing and collection category and (2) all other elements and categories. To determine the amount to be assigned to the billing and collection category, we propose to apply a modified ''Big Three Expense Factor'' allocator to the interstate investment recorded in these four accounts. The interstate portion of Account 6120 (General Support Expenses) will continue to be apportioned among all elements and categories, including billing and collection, based upon the allocation rules contained in 47 CFR 69.401(a)(2). *Access Charge Reform*, Third Report and Order, CC Docket No. 96–262, 12 FCC Rcd 22430 (1997) (*Third Report and Order*), 62 FR 65619 (December 15, 1997). Because certain small rate-of-return LECs do not maintain accounts below the summary account level, we seek comment on what adjustments, if any, we should make to the allocation procedures to reflect this difference. It would be helpful if parties would comment on how many rate-of-return LECs use general purpose computers to provide billing and collection services. We also invite parties to identify any changes that should be made to other access elements as a result of any changes we may make to the GSF allocation procedures. Finally, parties should also address the extent to which these approaches affect large and small rate-of-return LECs differently and how small business entities, including small incumbent LECs and new entrants, will be affected.

37. *Marketing Expenses.* The Commission concluded in the *Access Charge Reform Order* that price cap LECs' marketing costs that are not related to the sale or advertising of interstate switched access services are not appropriately recovered from IXCs through per-minute interstate switched access charges. We seek comment on our tentative conclusion that rate-of-return LECs' marketing expenses allocated to the interstate jurisdiction should be recovered through the common line recovery mechanism from end users on a per-line basis. Specifically, we propose that rate-of-return LECs recover the revenues related to the Account 6610 marketing expenses by increasing the SLCs for multi-line business and non-primary residential lines, subject to the SLC ceilings. To the extent the SLC ceilings prevent full recovery of these amounts, rate-of-return LECs would be required to recover marketing costs through equal increases on the PICCs for non-primary residential and multi-line business lines, subject to the PICC ceilings. In the event the PICC ceilings prevent full recovery of these expenses, any residual marketing expenses may be recovered through per-minute charges on originating access service, subject to the ceiling placed on originating minutes. If rate-of-return LECs cannot recover their remaining marketing expenses through per-minute charges on originating access, any residual may be recovered through per-minute charges on terminating access service. To the extent marketing expenses will be recovered through the SLC, they shall not be included in the base factor portion or considered common line revenues.

38. We also ask parties to propose a mechanism comparable to the separate basket created for price cap LECs that will remove marketing expenses from access charges assessed by rate-of-return LECs. We invite parties to provide language for the amendment of our part 69 cost allocation rules that affect the recovery of these marketing expenses through the common line cost recovery mechanism.

39. *Special Access.* In light of the most recent changes to the charges incurred by multi-line businesses, including the higher SLC and the new multi-line business PICC, it may be cost effective for some multi-line businesses to substitute the purchase of special access lines for the use of switched access. We have already tentatively concluded that we should permit price cap LECs to assess a PICC on special access lines to recover revenues for the common line basket. *Access Charge Reform*, CC Docket No. 96–262, Further Notice of Proposed Rulemaking, 12 FCC Rcd 15982, 16154 ¶ 401 (1997), 62 FR 31868 (June 11, 1997) (*Further Notice*). The special access PICC would be no higher than the PICC that a price cap LEC could charge for a multi-line business line, would not recover TIC or marketing expenses, and would be gradually eliminated as the single-line PICC is gradually implemented for price cap LECs. We tentatively concluded that allowing price cap LECs to impose such special access PICCs would be necessary to facilitate the transition from current per minute CCL charges to the flat-rate PICC.

40. We invite parties to comment on whether, if we apply a PICC to special access services offered by price cap LECs, we should apply a PICC to special access services offered by rate-of-return LECs. Parties should comment on the

impact of PICCs on special access lines if the PICCs on rate-of-return LECs' multi-line business lines remain in place for a considerably longer time than they do for price cap LECs. To the extent parties advocate assessing PICCs on special access lines, we seek comment on how special access connections should be counted for purposes of assessing a ''per line'' PICC. Parties should also address the extent to which our proposal affects large and small LECs differently and how small business entities, including small incumbent LECs and new entrants, will be affected.

41. *Part 69 Cost Allocation Rules.* Under the Commission's separations rules at 47 CFR part 36, certain costs of the incumbent LEC network are assigned to the interstate jurisdiction. For rate-of-return LECs, the Commission's cost allocation rules at 47 CFR part 69 allocate these interstate costs among the various access and interexchange services. In addition to the comment requested previously in this NPRM on the need for changes to our cost allocation rules in conjunction with specific proposals to revise certain rate structure provisions of the part 69 rules, we ask whether we should make any other modifications at this time to our cost allocation rules for rate-of-return LECs to accommodate any of those changes, or to update the rules in other respects. Parties making such suggestions should be specific about the reasons the change is needed and include proposed language for revising the cost allocation rules.

42. *Modification of New Services Requirement.* Rate-of-return LECs currently must file a petition pursuant to 47 CFR 1.3 to request a part 69 waiver for the establishment of one or more new switched access rate elements to accommodate a new service offering to switched access customers. In order to streamline the part 69 waiver process for a rate-of-return LEC wishing to offer a new service, we request comment on our proposal to adopt for rate-of-return LECs the streamlined petition provisions of section 69.4(g), which currently requires a price cap LEC in similar circumstances to file a petition that demonstrates one of two criteria: (1) That another LEC has previously obtained approval to establish identical rate elements and that the original petition did not rely upon a competitive showing as part of its public interest justification, or (2) that the new rate elements would serve the public interest. In addition, we request suggestions as to any manner in which the procedures or standards of section 69.4(g) should be modified for rate-of-return LECs. Parties should comment, for instance, on whether a showing of prior approval should be limited to petitions granted to other rate-of-return LECs.

Ex Parte Presentations

43. This Notice of Proposed Rulemaking is a permit-but-disclose proceeding and is subject to the permit-but-disclose requirements under 47 CFR 1206(b), as revised. Persons making oral *ex parte* presentations are reminded that memoranda summarizing the presentation must contain a summary of the substance of the presentation and not merely a listing of the subjects discussed. More than a one or two sentence description of the views and arguments presented is generally required. Other rules pertaining to oral and written presentations are set forth in section 1.1206(b), as well.

Regulatory Flexibility Analysis

44. As required by the Regulatory Flexibility Act (RFA), the Commission has prepared this Initial Regulatory Flexibility Analysis (IRFA) of the possible significant economic impact on small entities of the proposals suggested in this *NPRM. See* 5 U.S.C. 603. The RFA, 5 U.S.C. 601 *et seq.*, has been amended by the Contract With America Advancement Act of 1996, Public Law 104–121, 110 Stat. 847 (1996) (CWAAA). Title II of the CWAAA is the Small Business Regulatory Enforcement Fairness Act of 1996 (SBREFA).

45. Written public comments are requested on the IRFA. Comments and reply comments must be identified by a separate and distinct heading as responses to the IRFA and must be filed on or before August 17 or September 17, 1998 respectively. Parties should address the extent to which our proposals affect large and small incumbent rate-of-return local exchange carriers (LECs) differently and how small business entities, including small incumbent LECs and new entrants, will be affected. The Commission's Office of Public Affairs, Reference Operations Division, will send a copy of this *NPRM,* including this IRFA, to the Chief Counsel for Advocacy of the Small Business Administration, in accordance with 5 USC 603(a). In addition, the *NPRM* and IRFA (or summaries thereof) will be published in the **Federal Register.**

46. Need for, and Objectives of, the Proposed Rules. The Commission's access charge rules for rate-of-return LECs were adopted at a time when interstate access and local exchange services were offered on a monopoly basis. We seek to revise the Commission's access charge rules for local exchange carriers (LECs) subject to rate-of-return regulation to make the rules consistent with the pro-competitive, deregulatory policies contemplated by the Telecommunications Act of 1996. In the 1997 *Access Charge Reform Order,* we focused on setting in motion the forces of competition and deregulation in local markets served by incumbent local exchange carriers subject to price cap regulation. In this *NPRM,* we propose to modify our rate structure requirements, to the extent possible, to permit rate-of-return LECs to recover costs in a manner that more accurately reflects the way those costs are incurred, identify implicit subsidies, and reduce subsidies by recovering more costs from the cost causer, thereby sending more accurate pricing signals to both consumers and competitors, and facilitating the transformation from a regulated to a competitive marketplace. Specifically, we propose to reduce usage-sensitive interstate access charges by diminishing local loop and other non-traffic sensitive costs and directing rate-of-return LECs to recover those non-traffic sensitive costs through more economically efficient, flat-rated charges.

47. Legal Basis. The proposed action is authorized by sections 1–4, 201–205, 251, 254, 303(r) and 403 of the Communications Act of 1934, as amended, 47 U.S.C. 151–154, 201–205, 251, 254, 303(r) and 403.

48. Description and Estimate of the Number of Small Entities To Which the Proposed Rules Will Apply. The Regulatory Flexibility Act directs agencies to provide a description of and an estimate, where feasible, of the number of small entities that may be affected by proposed rules, if adopted. 5 U.S.C. 603(b)(3). The Regulatory Flexibility Act generally defines the term ''small entity'' as having the same meaning as the term ''small business.'' 5 U.S.C. 601(6). The term ''small business'' has the same meaning as the term ''small business concern'' under the Small Business Act. *See* 5 U.S.C. 601(3). Under the Small Business Act, a ''small business concern'' is one that: (1) Is independently owned and operated; (2) is not dominant in its field of operation; and (3) meets any additional criteria established by the Small Business Administration (SBA). 15 USC 632. *See, e.g., Brown Transport Truckload, Inc.* v. *Southern Wipers, Inc.,* 176 B.R. 82 (N.D. Ga. 1994).

49. Because the small rate-of-return LECs that would be subject to these rules are either dominant in their field of operations or are not independently owned and operated, consistent with

our prior practice, they are excluded from the definition of ''small entity'' and ''small business concerns.'' *See Implementation of the Local Competition Provisions of the Telecommunications Act of 1996,* CC Docket No. 96–98, First Report and Order, 11 FCC Rcd 15499, 16144–45 ¶¶ 1327–30 (1996) (*Local Competition Order*), 61 FR 45476 (August 29, 1996), *Order on Reconsideration,* 11 FCC Rcd 13042 (1996), 61 FR 52706 (October 8, 1996), *vacated in part sub nom. Iowa Utils. Bd.* v. *FCC,* 120 F.3d 753 (8th Cir. 1997), *cert. granted sub nom. AT&T Corp.* v. *Iowa Utils. Bd.,* 118 S.Ct. 879 (1998). Accordingly, our use of the terms ''small entities'' and ''small businesses'' does not encompass small rate-of-return LECs. Out of an abundance of caution, however, for regulatory flexibility analysis purposes, we will consider small rate-of-return LECs within this analysis and use the term ''small incumbent rate-of-return LECs'' to refer to any rate-of-return LECs that arguably might be defined by SBA as ''small business concerns,'' including consideration of any adverse impact of the rules we adopt and consideration of alternatives that may reduce adverse impacts on such entities. Since the time of the Commission's 1996 decision in the *Local Competition Order,* 11 FCC Rcd at 16144–45, 61 FR 45476 (August 29, 1996), the Commission has consistently addressed in its regulatory flexibility analyses the impact of its rules on incumbent LECs. *See* 13 CFR 121.210 (SIC 4813). *See also* Executive Office of the President, Office of Management and Budget, *Standard Industrial Classification Manual* (1987).

50. The SBA has defined a small business for Standard Industrial Classification (SIC) category 4813 (Telephone Communications, Except Radiotelephone) to be small telecommunications entities when they have no more than 1,500 employees at the holding company level. 13 CFR 121.201. We invite interested parties to discuss the number of telecommunications providers, if any, that can be considered ''small entities'' within the meaning of the Regulatory Flexibility Act, and whether there is any reason to establish different requirements for small telecommunication providers. Below, we discuss the total estimated number of telephone companies falling within these categories and the number of small businesses in each category, and we then attempt to refine further those estimates to correspond with the categories of telephone companies that are commonly used under our rules.

51. The most reliable source of information regarding the total numbers of certain common carriers nationwide appears to be data the Commission publishes annually in its *Telecommunications Industry Revenue* report, regarding the Telecommunications Relay Service (TRS). FCC, Telecommunications Industry Revenue: TRS Fund Worksheet Data, Figure 2 (Number of Carriers Paying Into the TRS Fund by Type of Carrier) (Nov. 1997) (*Telecommunications Industry Revenue*). According to data in the most recent report, there are 3,459 interstate carriers. These carriers include, *inter alia,* local exchange carriers, wireline carriers and service providers, interexchange carriers, competitive access providers, operator service providers, pay telephone operators, providers of telephone toll service, providers of telephone exchange service, and resellers. *See* 13 CFR 121.201, SIC code 4813.

52. *Telephone Companies Affected.* The United States Bureau of the Census (Census Bureau) reports that, at the end of 1992, there were 3,497 firms engaged in providing telephone service, as defined therein, for at least one year. United States Department of Commerce, Bureau of the Census, *1992 Census of Transportation, Communications, and Utilities, Establishment and Firm Size,* at Firm Size 1–123 (1995) (*1992 Census*). This number contains a variety of different categories of carriers, including incumbent LECs, interexchange carriers (IXCs), competitive access providers, cellular carriers, mobile service carriers, operator service providers, pay telephone operators, personal communication service (PCS) providers, covered specialized mobile radio (SMR) providers, and resellers. It seems certain that some of those 3,497 telephone service firms may not qualify as small entities or small rate-of-return incumbent LECs because they are not independently owned or operated. *See generally* 15 U.S.C. 632(a)(1). For example, a PCS provider that is affiliated with an IXC having more than 1,500 employees would not meet the definition of a small business. It seems reasonable to conclude that fewer than 3,497 telephone service firms are small entity telephone service firms or small incumbent rate-of-return LECs because some of them are not independently owned or operated.

53. *Wireline Carriers and Service Providers Affected.* The SBA has developed a definition of small entities for telephone communications companies other than radiotelephone (wireless) companies. According to the SBA's definition, a small business telephone company other than a radiotelephone company is one employing no more than 1,500 persons. 13 CFR 121.201, SIC Code 4812. The Census Bureau reports that there were 2,321 such telephone companies in operation for at least one year at the end of 1992. *1992 Census, supra,* at Firm Size 1–123. All but 26 of the 2,321 non-radiotelephone companies listed by the Census Bureau were reported to have fewer than 1,000 employees. Thus, even if all 26 of those companies had more than 1,500 employees, there would still be 2,295 non-radiotelephone companies that might qualify as small entities or small rate-of-return LECs. We do not have data on the number of carriers that are not independently owned and operated, and thus are unable at this time to estimate with greater precision the number of wireline carriers and service providers that would qualify as small business concerns under the SBA's definition. Consequently, we estimate that there are fewer than 2,295 small telephone communications companies other than radiotelephone companies that may be affected by the proposed rules, if adopted.

54. *Incumbent Local Exchange Carriers Affected.* Neither the Commission nor the SBA has developed a definition of small providers of local exchange service. The closest applicable definition under SBA rules is for telephone telecommunications companies other than radiotelephone (wireless) companies. Standard Industrial Classification (SIC) Code 4813. The most reliable source of information regarding the number of incumbent LECs nationwide appears to be the report that we compiled from the 1997 Telecommunications Relay Service (TRS) Fund worksheets and the Universal Service Fund (USF) worksheets of September, 1997. According to our most recent data, 1,376 companies that provided interstate telecommunications service as of June 30, 1997 reported that they were engaged in the provision of local exchange service. Federal Communications Commission, Common Carrier Bureau, Industry Analysis Division, *Carrier Locator: Interstate Service Providers,* Figure 1 (Nov. 1997). Although it seems certain that some of these carriers are not independently owned or operated, have more than 1,500 employees, or are subject to price cap regulation, we are unable at this time to estimate with greater precision the number of rate-of-return LECs that would qualify as small business

concerns under the SBA's definition. Consequently, we estimate that there are fewer than 1,376 small rate-of-return LECs that may be affected by the proposals in this NPRM, if adopted. We seek comment on this estimate.

55. *Interexchange Carriers.* Neither the Commission nor the SBA has developed a definition of small entities specifically applicable to providers of interexchange services. The closest applicable definition under the SBA rules is for telephone communications companies other than radiotelephone (wireless) companies. 13 CFR 121.201, SIC code 4813. According to the most recent *Telecommunications Industry Revenue* data, 143 carriers reported that they were engaged in the provision of interexchange services. *Telecommunications Industry Revenue,* Figure 2. We do not have data specifying the number of these carriers that are not independently owned and operated or have more than 1,500 employees, and thus are unable at this time to estimate with greater precision the number of interexchange carriers (IXCs) that would qualify as small business concerns under the SBA's definition. Consequently, we estimate that there are fewer than 143 small entity IXCs that may be affected by the proposed rules, if adopted.

56. *Description of Projected Reporting, Recordkeeping, and Other Compliance Requirements.* It is not clear whether, on balance, proposals in this NPRM would increase or decrease incumbent rate-of-return LECs' administrative burdens. With respect to rate-of-return LECs, we believe that the rate structure reforms that we propose in Sections II and III would require at least one, and possibly several, additional filings, and may reduce some administrative burdens. For example, if we adopt the streamlined petition provisions of 47 CFR 69.4(g) for introduction of new services by rate-of-return LECs, we expect that this would decrease some administrative burdens of rate-of-return LECs.

57. If the rule revisions we propose are adopted, we estimate that these rate-of-return LECs would make one tariff filing to bring their access charges into compliance with the revised rules. We are unable to estimate how extensive each tariff filing would be, on average. We estimate that, on average, it would take approximately two hours per page for the rate-of-return LEC to prepare each tariff filing, at a cost of $35 per hour in professional level and support staff salaries. If we decide to require the filing of a cost study for determining local switching costs attributable to line-side ports and to trunk-side ports, these rate-of-return LECs would file one cost study. We estimate that, on average, it would take approximately 400 hours for the rate-of-return LEC to prepare a cost study, at a cost of $30 per hour in professional level and support staff salaries. Compliance with these tariff and cost study requirements may compel the use of engineering, technical, operational, accounting, billing, and legal skills.

58. Steps Taken to Minimize Significant Economic Impact on Small Entities, and Significant Alternatives Considered. In Sections II and III, for the subscriber line charge, the carrier common line charge, non-traffic sensitive switching costs, the transport interconnection charge, a special access PICC, and general purpose computer costs, we have sought comment on how a number of proposals would affect small entities. These proposals could have varying positive or negative impacts on small entities, including small rate-of-return LECs and new entrants. We seek comment on these proposals and urge that parties support their comments with specific evidence and analysis.

59. Federal Rules that May Duplicate, Overlap, or Conflict with the Proposed Rules. None.

Additional NPRM Filing Procedures

60. Pursuant to applicable procedures set forth in 47 CFR 1.399 and 1.411 *et seq.*, interested parties may file comments with the Secretary, Federal Communications Commission, Washington D.C. 20554, no later than August 17, 1998. Interested parties may file replies no later than September 17, 1998. To file formally in this proceeding, participants must file an original and twelve copies of all comments, reply comments, and supporting comments. If participants want each Commissioner to receive a personal copy of their comments, an original plus 16 copies must be filed. In addition, parties must file two copies of any such pleading with the Competitive Pricing Division, Common Carrier Bureau, Room 518, 1919 M Street, N.W., Washington, D.C. 20554.

61. Parties submitting diskettes should submit them along with their formal filings to the Commission's Office of the Secretary. Submissions should be on a 3.5 inch diskette formatted in an DOS PC compatible form. The document should be saved into WordPerfect 5.1 for Windows format. The diskette should be submitted in ''read only'' mode. The diskette should be clearly labelled with the party's name, proceeding, type of pleading (comment or reply comment), docket number, and date of submission.

62. Parties may also file informal comments electronically via e-mail <rateofreturn@fcc.gov>. Only one copy of electronically-filed comments must be submitted. The docket number of this proceeding must appear in the subject line, CC Docket No. 98–77. The subject line must also disclose whether an electronic submission is an exact copy of formal comments. Your full name and U.S. Postal Service mailing address must be included in your submission.

63. Comments and replies must comply with 47 CFR 1.49 and all other applicable sections of the Commission's Rules. We also direct all interested parties to include the name of the filing party and the date of the filing on each page of their comments and replies. Comments and replies must also clearly identify the specific portion of the NPRM to which a particular comment or set of comments is responsive. If a portion of a party's comments does not fall under a particular topic listed in the Table of Contents of this NPRM, such comments must be included in a clearly labelled section at the beginning or end of the submission.

Ordering Clauses

64. Accordingly, it is ordered, pursuant to sections 1–4, 201–205, 251, 254, 303(r) and 403 of the Communications Act of 1934, as amended, 47 U.S.C. 151–154, 201–205, 251, 254, 303(r) and 403, that notice is hereby given of the rulemaking described above and that comment is sought on these issues.

65. It is further ordered that the Commission's Office of Public Affairs, Reference Operations Division, shall send a copy of this Notice of Proposed Rulemaking, including the Initial Regulatory Flexibility Analysis, to the Chief Counsel for Advocacy of the Small Business Administration.

List of Subjects in 47 CFR Part 69

Access charges, Communications common carriers.

Federal Communications Commission.

Magalie Roman Salas,

Secretary.

[FR Doc. 98–19266 Filed 7–17–98; 8:45 am]

BILLING CODE 6712–01–U

FEDERAL COMMUNICATIONS COMMISSION

47 CFR Part 73

[MM Docket No. 98–111, RM–9299]

Radio Broadcasting Services; Elko, NV

AGENCY: Federal Communications Commission.

ACTION: Proposed rule.

SUMMARY: The Commission requests comments on a petition filed by L. Topaz Enterprises, Inc., seeking the allotment of Channel 233C3 to Elko, NV, as the community's third local commercial FM service. Channel 233C3 can be allotted to Elko in compliance with the Commission's minimum distance separation requirements without the imposition of a site restriction, at coordinates 40–49–48 North Longitude and 115–45–36 West Latitude.

DATES: Comments must be filed on or before August 31, 1998, and reply comments on or before September 15, 1998.

ADDRESSES: Federal Communications Commission, Washington, DC 20554. In addition to filing comments with the FCC, interested parties should serve the petitioner, or its counsel or consultant, as follows: Dale A. Ganske, 5546–3 Century Avenue, Middleton, WI 53562 (Petitioner).

FOR FURTHER INFORMATION CONTACT: Leslie K. Shapiro, Mass Media Bureau, (202) 418–2180.

SUPPLEMENTARY INFORMATION: This is a synopsis of the Commission's Notice of Proposed Rule Making, MM Docket No. 98–111, adopted July 1, 1998, and released July 10, 1998. The full text of this Commission decision is available for inspection and copying during normal business hours in the FCC Reference Center (Room 239), 1919 M Street, NW., Washington, DC. The complete text of this decision may also be purchased from the Commission's copy contractor, International Transcription Services, Inc., (202) 857–3800, 1231 20th Street, NW, Washington, DC 20036.

Provisions of the Regulatory Flexibility Act of 1980 do not apply to this proceeding.

Members of the public should note that from the time a Notice of Proposed Rule Making is issued until the matter is no longer subject to Commission consideration or court review, all *ex parte* contacts are prohibited in Commission proceedings, such as this one, which involve channel allotments. See 47 CFR 1.1204(b) for rules governing permissible *ex parte* contacts.

For information regarding proper filing procedures for comments, see 47 CFR 1.415 and 1.420.

List of Subjects in 47 CFR Part 73

Radio broadcasting.

Federal Communications Commission.

John A. Karousos,

Chief, Allocations Branch, Policy and Rules Division, Mass Media Bureau.

[FR Doc. 98–19310 Filed 7–17–98; 8:45 am]

BILLING CODE 6712–01–F

FEDERAL COMMUNICATIONS COMMISSION

47 CFR Part 73

[MM Docket No. 98–110, RM–9311]

Radio Broadcasting Services; Humboldt, NE

AGENCY: Federal Communications Commission.

ACTION: Proposed rule.

SUMMARY: The Commission requests comments on a petition filed by C.R. Communications, Inc. seeking the allotment of Channel 244A to Humboldt, NE, as the community's first local aural service. Channel 244A can be allotted to Humboldt in compliance with the Commission's minimum distance separation requirements with a site restriction of 2.1 kilometers (1.4 miles) southeast, at coordinates 40–09–00 North Latitude and 95–55–43 West Longitude, to avoid a short-spacing to Station KZKX, Channel 245C1, Seward, NE.

DATES: Comments must be filed on or before August 31, 1998, and reply comments on or before September 15, 1998.

ADDRESSES: Federal Communications Commission, Washington, DC 20554. In addition to filing comments with the FCC, interested parties should serve the petitioner, or its counsel or consultant, as follows: Charles A. Radatz, President, C.R. Communications, Inc., P.O. Box 589, Falls City, NE 68355 (Petitioner).

FOR FURTHER INFORMATION CONTACT: Leslie K. Shapiro, Mass Media Bureau, (202) 418–2180.

SUPPLEMENTARY INFORMATION: This is a synopsis of the Commission's Notice of Proposed Rule Making, MM Docket No. 98–110, adopted July 1, 1998, and released July 10, 1998. The full text of this Commission decision is available for inspection and copying during normal business hours in the FCC Reference Center (Room 239), 1919 M Street, NW., Washington, DC. The complete text of this decision may also be purchased from the Commission's copy contractor, International Transcription Services, Inc., (202) 857–3800, 1231 20th Street, NW, Washington, DC 20036.

Provisions of the Regulatory Flexibility Act of 1980 do not apply to this proceeding.

Members of the public should note that from the time a Notice of Proposed Rule Making is issued until the matter is no longer subject to Commission consideration or court review, all *ex parte* contacts are prohibited in Commission proceedings, such as this one, which involve channel allotments. See 47 CFR 1.1204(b) for rules governing permissible *ex parte* contacts.

For information regarding proper filing procedures for comments, see 47 CFR 1.415 and 1.420.

List of Subjects in 47 CFR Part 73

Radio broadcasting.

Federal Communications Commission.

John A. Karousos,

Chief, Allocations Branch, Policy and Rules Division, Mass Media Bureau.

[FR Doc. 98–19309 Filed 7–17–98; 8:45 am]

BILLING CODE 6712–01–F

FEDERAL COMMUNICATIONS COMMISSION

47 CFR Part 73

[MM Docket No. 98–109; RM–9282]

Radio Broadcasting Services; Superior, WY

AGENCY: Federal Communications Commission.

ACTION: Proposed rule.

SUMMARY: The Commission requests comments on a petition filed by Windy Valley Broadcasting proposing the allotment of Channel 293C at Superior, Wyoming, as the community's first local aural transmission service. Channel 293C can be allotted to Shoshoni in compliance with the Commission's minimum distance separation requirements at city reference coordinates. The coordinates for Channel 293C at Superior are North Latitude 41–46–12 and West Longitude 108–58–12.

DATES: Comments must be filed on or before August 31, 1998, and reply comments on or before September 15, 1998.

ADDRESSES: Federal Communications Commission, Washington, DC 20554. In addition to filing comments with the FCC, interested parties should serve the petitioner, his counsel, or consultant, as

follows: A. Wray Fitch, III, Esq., Gammon & Grange, P.C., 8280 Greensboro Drive, McLean, Virginia 22102–3807(Counsel for Petitioner).

FOR FURTHER INFORMATION CONTACT: Sharon P. McDonald, Mass Media Bureau, (202) 418–2180.

SUPPLEMENTARY INFORMATION: This is a synopsis of the Commission's Notice of Proposed Rule Making, MM Docket No. 98–109, adopted July 1, 1998, and released July 10, 1998. The full text of this Commission decision is available for inspection and copying during normal business hours in the FCC Reference Center (Room 239), 1919 M Street, NW., Washington, DC. The complete text of this decision may also be purchased from the Commission's copy contractor, International Transcription Service, Inc., (202) 857–3800, 1231 20th Street, NW., Washington, DC 20036.

Provisions of the Regulatory Flexibility Act of 1980 do not apply to this proceeding.

Members of the public should note that from the time a Notice of Proposed Rule Making is issued until the matter is no longer subject to Commission consideration or court review, all *ex parte* contacts are prohibited in Commission proceedings, such as this one, which involve channel allotments. See 47 CFR 1.1204(b) for rules governing permissible *ex parte* contacts.

For information regarding proper filing procedures for comments, see 47 CFR 1.415 and 1.420.

List of Subjects in 47 CFR Part 73

Radio broadcasting.

Federal Communications Commission.

John A. Karousos,

Chief, Allocations Branch, Policy and Rules Division, Mass Media Bureau.

[FR Doc. 98–19308 Filed 7–17–98; 8:45 am]

BILLING CODE 6712–01–F

FEDERAL COMMUNICATIONS COMMISSION

47 CFR Part 73

[MM Docket No. 98–107, RM–9288]

Radio Broadcasting Services; Gaylord, MI

AGENCY: Federal Communications Commission.

ACTION: Proposed rule.

SUMMARY: This document requests comments on a petition filed by Darby Advertising, Inc., proposing the substitution of Channel 268A for Channel 237A at Gaylord, Michigan, and modification of the license for Station WMJZ to specify operation on Channel 268A. Channel 268A can be allotted to Gaylord, Michigan, at petitioner's specified site (45–01–33 and 84–39–40). Canadian concurrence will be requested for this allotment. In addition, we will not accept competing expressions of interest for the use of Channel 268A at Gaylord because no upgrade in facilities is contemplated.

DATES: Comments must be filed on or before August 31, 1998, and reply comments on or before September 15, 1998.

ADDRESSES: Federal Communications Commission, Washington, DC. 20554. In addition to filing comments with the FCC, interested parties should serve the petitioner's counsel, as follows: Allan C. Campbell, Irwin, Campbell, & Tannenwald, P.C., 1730 Rhode Island Avenue, N.w., Suite 20, Washington, D. C. 20036.

FOR FURTHER INFORMATION CONTACT: Kathleen Scheuerle, Mass Media Bureau, (202) 418–2180.

SUPPLEMENTARY INFORMATION: This is a summary of the Commission's Notice of Proposed Rule Making, MM Docket No. 98–107, adopted June 24, 1998, and released July 10, 1998. The full text of this Commission decision is available for inspection and copying during normal business hours in the Commission's Reference Center (Room 239), 1919 M Street, NW., Washington, DC. The complete text of this decision may also be purchased from the Commission's copy contractors, International Transcription Services, Inc., 1231 20th Street, NW., Washington, DC. 20036, (202) 857–3800, facsimile (202) 857–3805.

Provisions of the Regulatory Flexibility Act of l980 do not apply to this proceeding.

Members of the public should note that from the time a Notice of Proposed Rule Making is issued until the matter is no longer subject to Commission consideration or court review, all *ex parte* contacts are prohibited in Commission proceedings, such as this one, which involve channel allotments. See 47 CFR 1.1204(b) for rules governing permissible *ex parte* contact.

For information regarding proper filing procedures for comments, see 47 CFR 1.415 and 1.420.

List of Subjects in 47 CFR Part 73

Radio broadcasting.

Federal Communications Commission.

John A. Karousos,

Chief, Allocations Branch, Policy and Rules Division, Mass Media Bureau.

[FR Doc. 98–19307 Filed 7–17–98; 8:45 am]

BILLING CODE 6712–01–F

FEDERAL COMMUNICATIONS COMMISSION

47 CFR Part 73

[MM Docket No. 98–113; RM–9296]

Radio Broadcasting Services; Tumon, GU

AGENCY: Federal Communications Commission.

ACTION: Proposed rule.

SUMMARY: The Commission requests comments on a petition filed by Guam Broadcast Services, Inc., proposing the allotment of Channel 280A at Tumon, Guam, as the community's first local aural transmission service. Channel 280A can be allotted to Tumon in compliance with the Commission's minimum distance separation requirements at city reference coordinates. The coordinates for Channel 280A at Tumon are North Latitude 13–30–25 and East Longitude 144–48–05.

DATES: Comments must be filed on or before August 31, 1998, and reply comments on or before September 15, 1998.

ADDRESSES: Federal Communications Commission, Washington, DC 20554. In addition to filing comments with the FCC, interested parties should serve the petitioner, his counsel, or consultant, as follows: Robert J. Rini, Esq., Rini, Coran & Lancellotta, P.C., 1350 Connecticut Avenue, NW., Suite 900, Washington, DC 20036 (Counsel for Petitioner).

FOR FURTHER INFORMATION CONTACT: Sharon P. McDonald, Mass Media Bureau, (202) 418–2180.

SUPPLEMENTARY INFORMATION: This is a synopsis of the Commission's Notice of Proposed Rule Making, MM Docket No. 98–113, adopted July 1, 1998, and released July 10, 1998. The full text of this Commission decision is available for inspection and copying during normal business hours in the FCC Reference Center (Room 239), 1919 M Street, NW., Washington, DC. The complete text of this decision may also be purchased from the Commission's copy contractor, International Transcription Service, Inc., (202) 857–3800, 1231 20th Street, NW., Washington, DC 20036.

Provisions of the Regulatory Flexibility Act of 1980 do not apply to this proceeding.

Members of the public should note that from the time a Notice of Proposed Rule Making is issued until the matter is no longer subject to Commission consideration or court review, all *ex parte* contacts are prohibited in Commission proceedings, such as this one, which involve channel allotments. See 47 CFR 1.1204(b) for rules governing permissible *ex parte* contacts.

For information regarding proper filing procedures for comments, see 47 CFR 1.415 and 1.420.

List of Subjects in 47 CFR Part 73

Radio broadcasting.

Federal Communications Commission.

John A. Karousos,

Chief, Allocations Branch, Policy and Rules Division, Mass Media Bureau.

[FR Doc. 98–19306 Filed 7–17–98; 8:45 am]

BILLING CODE 6712–01–F

FEDERAL COMMUNICATIONS COMMISSION

47 CFR Part 73

[MM Docket No. 98–114; RM–9298]

Radio Broadcasting Services; La Center, KY

AGENCY: Federal Communications Commission.

ACTION: Proposed rule.

SUMMARY: The Commission requests comments on a petition filed by Billy R. Evans proposing the allotment of Channel 282A at La Center, Kentucky, as the community's first local aural transmission service. Channel 282A can be allotted to La Center in compliance with the Commission's minimum distance separation requirements with a site restriction of 8.8 kilometers (5.5 miles) east to avoid a short-spacing to the licensed site of Station WFGE(FM), Channel 279C1, Murray, Kentucky, at petitoner's requested site. The coordinates for Channel 282A at La Center are North Latitude 37–04–22 .and West Longitude 88–52–25.

DATES: Comments must be filed on or before August 31, 1998, and reply comments on or before September 15, 1998.

ADDRESSES: Federal Communications Commission, Washington, DC 20554. In addition to filing comments with the FCC, interested parties should serve the petitioner, his counsel, or consultant, as follows: Billy R. Evans, 108 Connecticut Street, Elizabethtown, Kentucky 42701 (Petitioner).

FOR FURTHER INFORMATION CONTACT: Sharon P. McDonald, Mass Media Bureau, (202) 418–2180.

SUPPLEMENTARY INFORMATION: This is a synopsis of the Commission's Notice of Proposed Rule Making, MM Docket No. 98–114, adopted July 1, 1998, and released July 10, 1998. The full text of this Commission decision is available for inspection and copying during normal business hours in the FCC Reference Center (Room 239), 1919 M Street, NW., Washington, DC. The complete text of this decision may also be purchased from the Commission's copy contractor, International Transcription Service, Inc., (202) 857–3800, 1231 20th Street, NW., Washington, DC 20036.

Provisions of the Regulatory Flexibility Act of 1980 do not apply to this proceeding.

Members of the public should note that from the time a Notice of Proposed Rule Making is issued until the matter is no longer subject to Commission consideration or court review, all *ex parte* contacts are prohibited in Commission proceedings, such as this one, which involve channel allotments. See 47 CFR 1.1204(b) for rules governing permissible *ex parte* contacts.

For information regarding proper filing procedures for comments, see 47 CFR 1.415 and 1.420.

List of Subjects in 47 CFR Part 73

Radio broadcasting.

Federal Communications Commission.

John A. Karousos,

Chief, Allocations Branch, Policy and Rules Division, Mass Media Bureau.

[FR Doc. 98–19305 Filed 7–17–98; 8:45 am]

BILLING CODE 6712–01–F

FEDERAL COMMUNICATIONS COMMISSION

47 CFR Part 73

[MM Docket No. 98–115, RM–9277]

Radio Broadcasting Services; Stevensville, MT

AGENCY: Federal Communications Commission.

ACTION: Proposed rule.

SUMMARY: This document requests comments on a petition filed by Topaz Enterprises, Inc. proposing the allotment of Channel 283A to Stevensville, Montana, as that community's first local broadcast service. The channel can be allotted to Stevensville without a site restriction at coordinates 46–30–24 and 114–05–18. Canadian concurrence will be requested for this allotment.

DATES: Comments must be filed on or before August 31, 1998, and reply comments on or before September 15, 1998.

ADDRESSES: Federal Communications Commission, Washington, DC. 20554. In addition to filing comments with the FCC, interested parties should serve the petitioner, as follows: Dale A. Ganske, President, L. Topaz Enterprises, Inc., 5546–3 Century Ave., Middleton, Wisconsin 53562.

FOR FURTHER INFORMATION CONTACT: Kathleen Scheuerle, Mass Media Bureau, (202) 418–2180.

SUPPLEMENTARY INFORMATION: This is a summary of the Commission's Notice of Proposed Rule Making, MM Docket No. 98–115, adopted July 1, 1998, and released July 10, 1998. The full text of this Commission decision is available for inspection and copying during normal business hours in the Commission's Reference Center (Room 239), 1919 M Street, NW., Washington, DC. The complete text of this decision may also be purchased from the Commission's copy contractors, International Transcription Services, Inc., 1231 20th Street, NW., Washington, DC. 20036, (202) 857–3800, facsimile (202) 857–3805.

Provisions of the Regulatory Flexibility Act of l980 do not apply to this proceeding.

Members of the public should note that from the time a Notice of Proposed Rule Making is issued until the matter is no longer subject to Commission consideration or court review, all *ex parte* contacts are prohibited in Commission proceedings, such as this one, which involve channel allotments. See 47 CFR 1.1204(b) for rules governing permissible *ex parte* contact.

For information regarding proper filing procedures for comments, see 47 CFR 1.415 and 1.420.

List of Subjects in 47 CFR Part 73

Radio broadcasting.

Federal Communications Commission.

John A. Karousos,

Chief, Allocations Branch, Policy and Rules Division, Mass Media Bureau.

[FR Doc. 98–19304 Filed 07–17–98; 8:45 am]

BILLING CODE 6712–01–F

FEDERAL COMMUNICATIONS COMMISSION

47 CFR Part 73

[MM Docket No. 98–116; RM–9281]

Radio Broadcasting Services; Lovell, WY

AGENCY: Federal Communications Commission.

ACTION: Proposed rule.

SUMMARY: The Commission requests comments on a petition filed by Windy Valley Broadcasting proposing the allotment of Channel 296C at Lovell, Wyoming, as the community's first local aural transmission service. Channel 296C can be allotted to Lovell in compliance with the Commission's minimum distance separation requirements with a site restriction of 25.4 kilometers (15.8 miles) south at petitioner's requested site. The coordinates for Channel 296C at Lovell are North Latitude 44–36–23 and West Longitude 108–23–30.

DATES: Comments must be filed on or before August 31, 1998, and reply comments on or before September 15, 1998.

ADDRESSES: Federal Communications Commission, Washington, DC 20554. In addition to filing comments with the FCC, interested parties should serve the petitioner, his counsel, or consultant, as follows: A. Wray Fitch, III, Esq., Gammon & Grange, P.C., 8280 Greensboro Drive, McLean, Virginia 22102–3807(Counsel for Petitioner).

FOR FURTHER INFORMATION CONTACT: Sharon P. McDonald, Mass Media Bureau, (202) 418–2180.

SUPPLEMENTARY INFORMATION: This is a synopsis of the Commission's Notice of Proposed Rule Making, MM Docket No. 98–116, adopted July 1, 1998, and released July 10, 1998. The full text of this Commission decision is available for inspection and copying during normal business hours in the FCC Reference Center (Room 239), 1919 M Street, NW., Washington, DC. The complete text of this decision may also be purchased from the Commission's copy contractor, International Transcription Service, Inc., (202) 857–3800, 1231 20th Street, NW., Washington, DC 20036.

Provisions of the Regulatory Flexibility Act of 1980 do not apply to this proceeding.

Members of the public should note that from the time a Notice of Proposed Rule Making is issued until the matter is no longer subject to Commission consideration or court review, all *ex parte* contacts are prohibited in Commission proceedings, such as this one, which involve channel allotments. See 47 CFR 1.1204(b) for rules governing permissible *ex parte* contacts.

For information regarding proper filing procedures for comments, see 47 CFR 1.415 and 1.420.

List of Subjects in 47 CFR Part 73

Radio broadcasting.

Federal Communications Commission.

John A. Karousos,

Chief, Allocations Branch, Policy and Rules Division, Mass Media Bureau.

[FR Doc. 98–19303 Filed 7–17–98; 8:45 am]

BILLING CODE 6712–01–F

FEDERAL COMMUNICATIONS COMMISSION

47 CFR Part 73

[MM Docket No. 98–112, RM–9027, RM–9268]

Radio Broadcasting Services; Anniston and Ashland, AL, College Park, Covington and Milledgeville, GA

AGENCY: Federal Communications Commission.

ACTION: Proposed rule.

SUMMARY: The Commission requests comments on two mutually exclusive petitions. Preston W. Small, licensee of Station WLRR, Channel 264A, Milledgevile, GA, requests the substitution of Channel 264C3 for Channel 264A, the reallotment of Channel 264C3 from Milledgeville to Covington, GA, as the community's second local aural and first local FM service, and the modification of Station WLRR's license to specify Covington as its community of license. WNNX License Investment Co., licensee of Station WHMA, Channel 263C, Anniston, AL, requests the substitution of Channel 263C3 for Channel 263C and its reallotment to College Park, GA, as the community's first local aural service, and the modification of Station WHMA's license accordingly. In addition, WNNX requests that Channel 261C3 be allotted to Anniston as the community's fifth local aural service and that Channel 264A be allotted to Ashland, AL, as the community's second local FM service.

DATES: Comments must be filed on or before August 31, 1998, and reply comments on or before September 15, 1998.

ADDRESSES: Federal Communications Commission, Washington, DC 20554. In addition to filing comments with the FCC, interested parties should serve the petitioners, or their counsel or consultants, as follows: Timothy E. Welch, Hill & Welch, 1330 New Hampshire Avenue, NW, Suite 113, Washington, DC 20036 (Counsel to Small); Mark N. Lipp, Ginsburg, Feldman & Bress, 1250 Connecticut Avenue, NW, Washington, DC 20036 (Counsel to WNNX).

FOR FURTHER INFORMATION CONTACT: Leslie K. Shapiro, Mass Media Bureau, (202) 418–2180.

SUPPLEMENTARY INFORMATION: Channel 264C3 can be allotted to Covington in compliance with the Commission's minimum distance separation requirements with a site restriction of 16.3 kilometers (10.2 miles) southeast, at coordinates 33–28–34 NL; 83–45–34 WL, to avoid a short-spacing to Station WUSY, Channel 264C, Cleveland, Tennessee and to accommodate petitioner's desired transmitter site. Channel 263C3 can be allotted to College Park with a site restriction of 12.0 kilometers (7.5 miles) northwest, at coordinates 33–45–32 NL; 84–30–10 WL, to accommodate petitioner's desired transmitter site, Channel 261C3 can be allotted to Anniston with a site restriction of 3.0 kilometers (1.9 miles) north, at coordinates 33–40–51; 85–48–56, to avoid a short-spacing to Station WDXX, Channel 261C2, Selma, Alabama, and Channel 264A can be allotted to Ashland with a site restriction of 5.9 kilometers (3.7 miles) south, at coordinates 33–13–15; 85–49–35, to avoid a short-spacing to Station WUSY, Cleveland, Tennessee.

This is a synopsis of the Commission's Notice of Proposed Rule Making, MM Docket No. 98–112, adopted July 1, 1998, and released July 10, 1998. The full text of this Commission decision is available for inspection and copying during normal business hours in the FCC Reference Center (Room 239), 1919 M Street, NW., Washington, DC. The complete text of this decision may also be purchased from the Commission's copy contractor, International Transcription Services, Inc., (202) 857–3800, 1231 20th Street, NW, Washington, DC 20036.

Provisions of the Regulatory Flexibility Act of 1980 do not apply to this proceeding.

Members of the public should note that from the time a Notice of Proposed Rule Making is issued until the matter is no longer subject to Commission consideration or court review, all *ex parte* contacts are prohibited in Commission proceedings, such as this one, which involve channel allotments.

See 47 CFR 1.1204(b) for rules governing permissible *ex parte* contacts.

For information regarding proper filing procedures for comments, see 47 CFR 1.415 and 1.420.

List of Subjects in 47 CFR Part 73

Radio broadcasting.

Federal Communications Commission.

John A. Karousos,

Chief, Allocations Branch, Policy and Rules Division, Mass Media Bureau.

[FR Doc. 98–19300 Filed 7–17–98; 8:45 am]

BILLING CODE 6712–01–F

DEPARTMENT OF TRANSPORTATION

Federal Highway Administration

49 CFR Part 385

[FHWA Docket No. FHWA–98–3639]

RIN 2125–AE37

Safety Fitness Procedures

AGENCY: Federal Highway Administration (FHWA), DOT.

ACTION: Advance notice of proposed rulemaking (ANPRM); request for comments.

SUMMARY: On November 6, 1997, the FHWA published a final rule incorporating the safety fitness rating methodology (SFRM) into 49 CFR 385 as appendix B. In that document the FHWA identified its ultimate goal as creating a more performance-based means of determining the fitness of carriers to conduct commercial motor vehicle (CMV) operations in interstate commerce. The final rule announced that the FHWA would publish an ANPRM shortly which would request comments on the future evolution of a rating system that could be used both in making safety fitness determinations and meeting the demands of shippers, insurers and other present and potential users interested in evaluating motor carrier performance. Since the final rule, legislation was enacted that substantially heightens the importance of unsatisfactory ratings. Accordingly, at this time the FHWA is seeking comments and supporting data on what issues should be considered in constructing a rating system for the future.

DATES: Comments must be received on or before September 18, 1998.

ADDRESSES: Submit written, signed comments to the docket number that appears in the heading of this document to the Docket Clerk, U.S. DOT Dockets, Room PL–401, 400 Seventh Street, SW., Washington, DC 20590. All comments received will be available for examination at the above address between 10 a.m. and 5 p.m., e.t., Monday through Friday, except Federal holidays. Those desiring notification of receipt of comments must include a self-addressed, stamped envelope or postcard.

FOR FURTHER INFORMATION CONTACT: Mr. William C. Hill, Office of Motor Carrier Research and Standards, (202) 366–4009, or Mr. Charles Medalen, Office of the Chief Counsel, (202) 366–1354, Federal Highway Administration, 400 Seventh Street, SW., Washington, D.C. 20590, Office hours are from 7:45 a.m. to 4:15 p.m., e.t., Monday through Friday, except Federal Holidays.

SUPPLEMENTARY INFORMATION:

Electronic Access

Internet users can access all comments received by the U.S. DOT Dockets, Room PL–401, by using the universal resource locator (URL): http://dms.dot.gov. It is available 24 hours each day, 365 days each year. Please follow the instructions online for more information and help.

An electronic copy of this document may be downloaded using a modem and suitable communications software from the Federal Register Electronic Bulletin Board Service at (202) 512–1661. Internet users may reach the **Federal Register**'s home page at: http://www.nara.gov/nara/fedreg and the Government Printing Office's database at: http//www.access.gpo.gov/su__docs.

Background

Safety ratings for interstate motor carriers have been in use by the Department of Transportation (DOT) since 1966 when Congress transferred the responsibility for regulating motor carrier safety to the Department from the Interstate Commerce Commission (ICC). Congress delegated the authority to regulate qualifications and maximum hours-of-service of drivers, and the safety of operations and equipment of motor carriers in interstate commerce to the FHWA, an operating administration of the DOT. Pub. L. 89–670, § 6(f)(3)(B), Oct. 15, 1966, 80 Stat. 940, repealed and recodified by Pub. L. 97–449, Jan. 12, 1983, 96 Stat. 2415, 49 U.S.C. 104(c). Section 215 of the Motor Carrier Safety Act (MCSA) of 1984 (Pub. L. 98–554, 98 Stat. 2844, 49 U.S.C. 31144) required the Secretary of Transportation to prescribe by regulation procedures for determining the safety fitness of owners and operators of CMVs in interstate commerce, including those seeking new or additional operating authority from the ICC. It also stated that ''rules adopted under this section shall supersede all Federal rules regarding safety fitness and safety rating of motor carriers in effect on the date of enactment of this Act.'' The final rule implementing the new safety fitness procedures mandated by the MCSA of 1984 became effective in 1989 (53 FR 50968, Dec. 19, 1988, 49 CFR Part 385). The procedures and rating methodology implementing the 1989 final rule were recently modified in a rulemaking concluding in a final rule issued on November 6, 1997, (62 FR 60035). This action was necessitated by a ruling of the U.S. Court of Appeals for the D.C. Circuit in *MST Express et al.* v. *Department of Transportation (FHWA),* 108 F.3d 401 (D.C. Cir. 1997), to the effect that the rating methodology had not been adopted through notice and comment rulemaking as required by the Administrative Procedure Act (5 U.S.C. 553).

In the Transportation Efficiency Act for the 21st Century (TEA–21), Pub. L. 105–178, enacted June 9, 1998, Congress amended 49 U.S.C. 31144 to prohibit transportation of any property in interstate commerce by motor carriers with unsatisfactory ratings, and provides such carriers 60 days within which to improve the rating (extendable another 60 days) before the prohibition takes effect. This provision will be incorporated into the current regulations in a subsequent rulemaking.

Safety Rating System

A safety fitness rating system was first used by the FHWA to provide safety information to the ICC to assist in screening applicants seeking operating authority. It evolved into a means to identify motor carriers most likely to benefit from on-site compliance reviews (CRs). Presently, safety ratings are made available to anyone upon request. Shippers, including governmental agencies, use the ratings in making carrier selections and insurers use them in making decisions regarding coverage.

Safety ratings are developed in part through an on-site CR of a motor carrier's records, operations and, when available, equipment. The review is used to assess whether a commercial motor carrier's safety management controls are functioning effectively to ensure acceptable compliance with § 385.5, safety fitness standard. Safety rating factors are used in determining a safety rating. Four rating factors relate to the regulatory requirements of the Federal Motor Carrier Safety Regulations (FMCSRs) (general, driver, operational, vehicle) and one to the Hazardous Materials Regulations

(HMR), if applicable. The carrier's accident rate is the remaining factor. The rating factors are given equal weight, and one of three safety ratings can be assigned: satisfactory, conditional, or unsatisfactory. This process also identifies motor carriers needing improvement in their compliance with the FMCSRs and HMRs. Motor carriers rated unsatisfactory generally receive a higher priority for future compliance and enforcement efforts.

Statutory Prohibitions

In 1991, following a mandate in the MCSA of 1990 (Pub. L. 101–500, § 15(b)(1), 104 Stat. 1218, 49 U.S.C. 5113), the FHWA promulgated § 385.13 which prohibits motor carriers of hazardous materials (in quantities requiring placarding) and passenger carriers transporting more than 15 passengers including the driver from operating with an unsatisfactory safety rating unless the rating is improved within 45 days.

The prohibition against transportation of passengers or hazardous materials was significant because it applied serious statutory consequences to an unsatisfactory rating and limited the motor carrier's ability to operate in interstate commerce. With this change, Congress equated the unsatisfactory rating with unsafe operations. The MCSA of 1990 also prohibited Federal agencies from using motor carriers with an unsatisfactory rating to transport hazardous materials in a quantity requiring placarding or more than 15 passengers.

Section 4009 of the TEA–21 now gives most carriers found by the FHWA to be unfit a grace period 60 days. Those unable to improve their fitness determination during that period will have to halt trucking operations on the 61st day. However, passenger and hazardous materials carriers found to be unfit remain subject to a 45-day grace period before shutting down. A rule to implement TEA–21 will be proposed later.

In the November 6, 1997, final rule, the FHWA included an amendment which gives all motor carriers (not just those subject to operational prohibitions) a 45-day grace period before a less-than-satisfactory rating takes effect. Under the new procedures, motor carriers receive a Notice of Proposed Rating when the rating would be less than satisfactory. The notice informs the carrier of the reasons for the unsatisfactory or conditional rating and that it will take effect in 45 days. It also advises the carrier of its procedural options under Part 385. During the exit interview at the conclusion of the CR, the motor carrier also is informed of the safety violations discovered and is advised how improvements can be made.

Other Uses of Ratings

As the safety rating system has evolved, the assignment of ratings has taken on new importance to the public, particularly shippers and insurance companies. The changing use and public perception of the ratings provide the impetus for this rulemaking. Over time, the reliance on the safety ratings to make important business decisions regarding which carriers to use or which to insure has continued to grow. The ability of the agency to maintain current ratings for all motor carriers has not. Experience over the last eight years illustrates the impracticality of attempting to rate all carriers in an industry with high company turnover. The motor carrier industry has also grown at a prodigious rate, especially since 1980. For example, in 1979, the year before deregulation, for-hire carriers holding interstate authority from the ICC numbered under 20,000. Today that group, which probably has the greatest demand for safety fitness determinations, comprises nearly 80,000 registrants. The OMC census, which includes private carriers and compensated carriers previously exempt from ICC regulation, contains well over 400,000 companies.

Completing on-site rating reviews, bringing enforcement actions against high-risk carriers, doing legislatively mandated complaint investigations requiring on-site carrier reviews, and responding to individual requests from motor carriers that need a satisfactory rating for business purposes or that object to the ratings they have received, all serve to contribute to a high demand the agency is not able to fulfill with current resources.

New Demands

The Congress directed the FHWA in Sec. 4003 of the Intermodal Surface Transportation Efficiency Act of 1991 (ISTEA), Pub. L. 102–240, 105 Stat. 1914, 2144, to establish information systems containing safety fitness data, including roadside inspections and out-of-service orders for State commercial motor vehicle registrants (49 U.S.C. 31106). The Congress further directed the Department to demonstrate methods of linking a carrier's safety fitness to vehicle registration and to determine the types of sanctions and limitations which may be imposed to ensure the safety fitness of the registrant. That demonstration project, formerly known as the Commercial Vehicle Information System (CVIS), developed a new methodology to prioritize motor carriers for on-site reviews and monitor their safety performance. It is now called the Performance and Registration Information System Management (PRISM). The FHWA is planning to issue a Notice of Proposed Rulemaking in the near future which will set forth mechanisms to encourage carriers to improve their safety performance and enhance the FHWA's ability to focus resources on poor performers, i.e., those carriers over-involved in crashes or presenting the greatest potential for crashes.

SAFESTAT

The demonstration project also produced a new safety risk assessment model, the Motor Carrier Safety Status Measuring System or SAFESTAT, which varies significantly from the current SFRM, because it makes extensive use of performance data and assesses carrier performance over time. A safety rating is static and does not change, even though actual performance may improve or decline, until a new CR is performed. In contrast, SAFESTAT uses all available safety performance data to continuously assess the safety status of carriers and generate a safety indicator. The indicator is a preliminary *ranking* of carriers relative to their peers and is designed to identify those carriers presenting potential risks that require additional attention. In SAFESTAT, the results of a CR contribute additional data elements to be considered along with safety performance data, such as accident rates, roadside vehicle inspections, driver performance, and enforcement actions. Other data elements, such as driver moving violations, will be added to the model as they become more generally available. SAFESTAT evaluates all data elements on the basis of severity and time. For example, more weight is given to a fatal or serious injury crash than a tow-away crash and recent crashes are weighted more heavily than crashes occurring in the past. The CR remains as an integral part of SAFESTAT, and is used to gather safety data that cannot be obtained at the roadside. SAFESTAT represents another method of assessing carrier safety, but at present it is not a substitute for the current safety fitness rating process.

Third-party Ratings

Because of the increasing demand for safety fitness evaluations and the realization that present resources are not likely to grow dramatically, the FHWA is exploring the feasibility of using

third-party contractors to increase the pool of safety information available. This is authorized by Sec. 4006 of TEA–21. Private rating services could be used to meet the public demand for additional safety information upon which to base business decisions. Federal resources would be freed up to pursue corrective measures against poorly performing carriers.

The U.S. Army's Military Traffic Management Command currently uses third-party services to assess the safety fitness of motor carriers under contract to the military. Private services could operate much like those already providing consumer credit histories, significantly increasing the availability of and access to relevant safety information. The FHWA and the industry could join in a partnership to set the standards for the conduct of safety fitness reviews, the use of safety information, and other aspects of such a system. A large data bank could be created into which safety information generated by Federal, State and private sources would be deposited. So long as shippers, insurers, and other stakeholders insisted on making decisions about the use of motor carriers based, at least in part, on their safety records, the demand for such a service would expand. Motor carriers interested in marketing their services would inevitably need to have a good safety rating to remain competitive. The FHWA is particularly interested in the feasibility of such a system.

General Discussion

Since its adoption, the safety rating process has been the subject of much confusion, controversy, and dispute. Although the FHWA had preferred to use the process as a means of targeting scarce enforcement and oversight resources, its use in making value judgments about the quality of motor carriers has increasingly been perceived as a primary function.

In a Notice of Proposed Rulemaking issued April 29, 1996, (61 FR 18870), the FHWA discussed the potential for the unsatisfactory rating to become the equivalent of a judgment that the motor carrier is unfit to operate in interstate commerce and to take on the aspect of a debarment in fact, if not in law. The statutory prohibition against the transportation of passengers or hazardous materials by a motor carrier with an unsatisfactory rating is now, with the enactment of TEA–21, to apply to all transportation of property. Most governmental shippers consider the unsatisfactory rating a disqualifier, and many other shippers treat it the same way. This is consistent with the FHWA's belief that unsatisfactory carriers should be well below the average and that the percentage of carriers earning such a rating ought to be small. The unsatisfactory rating has become and will remain a judgment that a carrier should discontinue operations until it can demonstrate a commitment to maintain adequate safety practices. That judgment must be correctly determined and fairly applied. In our system, a guilty judgment follows the opportunity to be heard, and the notice procedure adopted in the November 6, 1997, final rule should afford that opportunity.

In view of recent developments regarding the current safety fitness rating process and methodology and the obvious limitations on the availability of resources required to maintain a safety fitness evaluation process at the level many in the public and perhaps even the Congress expect, the FHWA is asking for comments and suggestions for changes through the following questions. In answering the questions, if possible, please provide any statistical information or empirical evidence to support your comments.

General

1. What do you believe should be the principal ingredients of a rating system? What kind of a rating system would best suit your needs? Why?

2. What benefits do you expect to gain from a rating system? What business decisions do you presently base on carrier ratings?

3. Are there differences in the way ratings should be used? (e.g., by FHWA? By shippers? By others?).

4. If ratings must impact the continued operations of rated carriers, what is the appropriate threshold for determining that a carrier is unsatisfactory, meaning ''unfit to operate''?

Tiered System

5. Should the FHWA continue to maintain the three ratings: *satisfactory*, *conditional*, or *unsatisfactory*? If yes, what benefits do your perceive in maintaining the three ratings?

6. What should be the highest tier in such a system, and what should it connote?

7. How long should any rating last?

8. Do you see any benefit to a single rating system by the FHWA which would be concerned only with *unsatisfactory* carriers that would have to improve or cease operating?

Criteria

9. Should such ratings be determined entirely by objective (performance-based) criteria? Why?

10. What data elements best reveal the safety performance of the motor carrier and should receive consideration in future safety fitness determinations?

11. How should regulatory compliance be treated in safety fitness determinations? Which regulations are most important in evaluating safety fitness?

12. How should poor compliance be reconciled with good safety experience? Should a motor carrier be rated *unsatisfactory* even if it has a low accident rate?

Data Sources

13. Do you believe there is presently sufficient data available to make judgments about a motor carrier's ability to stay in business?

14. Should carriers be grouped by similarity of operations? By size?

Third-party System

15. Are there significant benefits to be derived from a third-party on-site review system for evaluating motor carriers? What do you perceive them to be?

16. If a third-party review system were to start up, what should be the Federal role in such a system?

17. Could and should a private third-party review system coexist with a Federal system? What would be their respective roles? What relationships should there be, if any, between coexisting Federal and private review systems?

18. What should be the effect of the third-party rating on the carrier's operation? What kind of review procedures would be required?

19. Should the information from third-party on-site reviews become a part of the FHWA data base? How should such information be treated?

20. Should a third-party reviewer have direct access to FHWA's data base to a greater extent than such information is presently available to the public?

21. Should there be standards for third-party reviews, including the identification of the relevant data elements to be employed for evaluative purposes? How should such standards be developed?

Rulemaking Analyses and Notices

All comments received before the close of business on the comment closing date indicated above will be considered and will be available for examination in the docket room at the above address. Comments received after

the comment closing date will be filed in the docket and will be considered to the extent practicable, but the FHWA may issue an NPRM at any time after the close of the comment period. In addition to late comments, the FHWA will also continue to file, in the docket, relevant information that becomes available after the comment closing date, and interested persons should continue to examine the docket for new material.

Executive Order 12866 (Regulatory Planning and Review) and DOT Regulatory Policies and Procedures

The FHWA has determined that this document does not contain a significant regulatory action under Executive Order 12866. The FHWA does not know what direction this rulemaking will take, however, it does not expect that this rulemaking will be inconsistent with any other agency actions or materially alter the budgetary impact of any entitlements, grants, user fees, or loan programs. The FHWA anticipates that the costs of any rulemaking action that might be implemented in response to comments received would be no greater than the motor carrier's current costs of complying with the regulatory requirements. At this preliminary stage, we do not anticipate that any regulatory action taken in response to comments introduced here would be of sufficient economic magnitude to warrant a full regulatory evaluation.

Regulatory Flexibility Act

Although this document does not include any specific proposal at this time, the FHWA believes this action will not lead to a proposed rule that would have a significant economic impact on a substantial number of small motor carriers.

To meet the requirements of the Regulatory Flexibility Act (5 U.S.C. 601–612), however, the FHWA would evaluate the effects on small entities of any rule promulgated in subsequent phases of this proceeding. Therefore, the agency is particularly interested in comments from small entities on whether there are impacts from this action and how those impacts may be minimized.

Unfunded Mandates Reform Act of 1995

The FHWA will analyze any proposed rule to determine whether it would result in the expenditure by State, local, and tribal governments, in the aggregate, or by the private sector, of $100 million or more in any one year, as required by the Unfunded Mandates Reform Act of 1995 (2 U.S.C. 1532).

Executive Order 12612 (Federalism Assessment)

The FHWA will analyze any proposed rule using the principles and criteria contained in Executive Order 12612 to determine whether the proposal would have sufficient federalism implications to warrant the preparation of a federalism assessment. The FHWA does not expect that any action developed in response to comments introduced here would infringe upon the State's ability to discharge traditional State governmental functions because interstate commerce, which is the subject of these regulations regarding interstate operations, has traditionally been governed by Federal laws.

Executive Order 12372 (Intergovernmental Review)

Catalog of Federal Domestic Assistance Program Number 20.217, Motor Carrier Safety. The regulations implementing Executive Order 12372 regarding intergovernmental consultation on Federal programs and activities do not apply to this program.

Paperwork Reduction Act

The FHWA does not anticipate that any rulemaking action implemented in subsequent phases of this proceeding would result in changes in the collection of information requirements that are currently approved. The FHWA does not foresee the likelihood of increased paperwork burdens because what is being considered in this action is an evaluative process to determine, in part, how regulated motor carriers are complying with existing regulations. Should revisions to the safety assessment and rating system be proposed in this proceeding, however, the agency will evaluate carefully the information collection implications of such revisions under the Paperwork Reduction Act of 1995, 44 U.S.C. 3501–3520.

National Environmental Policy Act

The agency will analyze any action implemented in subsequent phases of this proceeding for the purposes of the National Environmental Policy Act of 1969 (42 U.S.C. 4321–4347) to determine whether the action would affect the quality of the environment.

Regulation Identification Number

A regulation identification number (RIN) is assigned to each regulatory action listed in the Unified Agenda of Federal Regulations. The Regulatory Information Service Center publishes the Unified Agenda in April and October of each year. The RIN contained in the heading of this document can be used to cross reference this action with the Unified Agenda.

List of Subjects in 49 CFR Part 385

Highway safety, Highways and roads, Motor carriers, Motor vehicle safety, and Safety fitness procedures.

Issued on: July 10, 1998.

Kenneth R. Wykle,

Federal Highway Administrator.

[FR Doc. 98–19294 Filed 7–17–98; 8:45 am]

BILLING CODE 4910–22–P

DEPARTMENT OF TRANSPORTATION

Federal Highway Administration

49 CFR Parts 395 and 396

[FHWA Docket No. FHWA–98–3414]

RIN 2125–AE35

Out-of-Service Criteria

AGENCY: Federal Highway Administration (FHWA), DOT.

ACTION: Advance notice of proposed rulemaking (ANPRM); request for comments.

SUMMARY: The FHWA seeks public comment concerning use of the ''North American Uniform Out-of-Service Criteria'' (OOS Criteria). During roadside inspections, Federal, State and local safety inspectors use the OOS Criteria as a guide in determining whether to place commercial motor vehicles (CMVs) or drivers of CMVs out-of-service. The OOS Criteria is a list of those violations which are so unsafe that they must be corrected before operations can resume. Correction of other less severe violations can be deferred to a more convenient time and place. The FHWA is seeking public comment on the future scope and effect of the OOS Criteria, which are not part of the Federal Motor Carrier Safety Regulations (FMCSRs). The agency is also seeking comment on the need to formalize these guidelines.

DATES: Comments should be received on or before September 18, 1998.

ADDRESSES: Signed, written comments should refer to the docket number appearing at the top of this document and must be submitted to the Docket Clerk, U.S. DOT Dockets, Room PL–401, 400 Seventh Street, SW., Washington, DC 20590–0001. All comments received will be available for examination at the above address between 10 a.m. and 5 p.m., e.t., Monday through Friday, except Federal holidays. Those desiring notification of receipt of comments must include a self-addressed, stamped envelope or postcard.

FOR FURTHER INFORMATION CONTACT: Mr. Robert F. Schultz, Jr., Office of Motor Carrier Research and Standards (HCS–10), (202) 366–4009, or Mr. Charles Medalen (HCC–20), Office of the Chief Counsel, (202) 366–1354, Federal Highway Administration, Department of Transportation, 400 Seventh Street, SW., Washington, DC 20590. Office hours are from 7:45 a.m. to 4:15 p.m., e.t., Monday through Friday, except Federal holidays.

SUPPLEMENTARY INFORMATION:

Electronic Access

Internet users can access all comments received by the U.S. DOT Dockets, Room PL–401, by using the universal resource locator (URL):http://dms.dot.gov. It is available 24 hours each day, 365 days each year. Please follow the instructions online for more information and help.

An electronic copy of this document may be downloaded using a modem and suitable communications software from the Government Printing Office's Electronic Bulletin Board Service at (202) 512–1661. Internet users may reach the Federal Register's home page at: http://www.nara.gov/fedreg and the Government Printing Office's database at: http://www.access.gpo.gov/su__docs.

What is the "North American Uniform Out-of-Service Criteria"?

The OOS Criteria is a reference guide developed and maintained by the Commercial Vehicle Safety Alliance (CVSA) to assist enforcement personnel in deciding whether to allow a CMV or driver, found in violation of law, to continue in commerce. The CVSA is an association of State, local, provincial and Federal officials responsible for the administration and enforcement of motor carrier safety laws and regulations in the United States, Canada, and Mexico. The CVSA provides a mechanism for the development of consensus upon issues of common concern. The OOS Criteria is a detailed list of conditions which the CVSA membership has agreed are sufficiently hazardous to justify restricting further operation by a driver or a CMV. Each year the CVSA reviews the OOS Criteria, and makes necessary changes.

How are the OOS Criteria Used?

The majority of the safety violations found during inspections at the roadside relate to the condition of the CMV. Some of these violations can be corrected at the roadside; for example, a driver can repair a turn signal which is not functioning. Others must be corrected at a repair facility. If a particular safety violation presents no immediate or undue threat to public safety, it would be an unnecessary interruption in the flow of commerce and perhaps even cause a traffic safety problem to require the motor carrier to undertake corrective action on site. In such cases, the assessment of a warning, fine, or other penalty is sufficient; the repairs necessary to prevent further deterioration or ultimately correct the condition may safely be deferred to another time and place.

In this sense, the OOS Criteria are usually less stringent than the FMCSRs. For example, a CMV with a single headlamp incapable of producing a low beam during night-time driving does not comply with the FMCSRs (49 CFR 393.9). The OOS Criteria, however, are not operable until both headlamps are incapable of producing a low beam. In this example, the inspector would cite the motor carrier for the violation of the FMCSRs, but permit the CMV to proceed so that repairs to the headlamp can be made at a more convenient time and place. In cases such as this, the OOS Criteria serve as enforcement tolerances because the violation of the FMCSRs is allowed to continue. In other instances, provisions of the OOS Criteria correspond precisely with the FMCSRs. For example, a CMV with only one rear turn signal working properly does not comply with the FMCSRs (49 CFR 393.11). The OOS Criteria also provides that the CMV should not be moved until both signals are in working order.

State inspectors with general police powers have authority under State law to stop and seize summarily. All States participating in the Motor Carrier Safety Assistance Program (MCSAP) have agreed that their inspectors will use the OOS Criteria when exercising this power. If an inspector, during an inspection activity, observes inherently dangerous conditions which are identified in the OOS Criteria, the inspector may issue an out-of-service order. Motor carriers and their drivers are able to anticipate reasonably uniform treatment of violations in all jurisdictions throughout this country because of the general acceptance of the OOS Criteria.

The majority of drivers who are placed out-of-service are so treated because they are driving in violation of the maximum hours-of-service rules under 49 CFR part 395. Such violations are usually corrected by the driver being off-duty at least eight consecutive hours.

An FHWA inspector at roadside may order a motor carrier's driver or CMV to cease operation.[1] When conducting roadside vehicle and driver inspections, the FHWA uses the OOS Criteria in deciding whether to allow particular motor carriers, CMVs, or drivers to proceed in violation of the FMCSRs.

How has the OOS Criteria Evolved?

Out-of-service criteria for drivers and CMVs have been in existence over forty years. Prior to its absorption into the United States Department of Transportation in 1967, the Bureau of Motor Carrier Safety (BMCS), a part of the former Interstate Commerce Commission, developed the first out-of-service criteria in carrying out its inspection function. Those criteria continued in use by the FHWA safety investigators thereafter.

In 1980, the FHWA conducted a pilot program to assess the potential of States to enforce CMV safety rules at the same time they enforce the restrictions on the size and weight of CMVs. Four States participated and generated results which were a factor in the enactment of legislation in 1982 authorizing the Motor Carrier Safety Assistance Program. That program, which provides funding to the States in their efforts to enforce motor carrier safety regulations, has been quite successful.

The States were brought together on another front by their search for a solution to the problems created by the patchwork of diverse State laws and regulations governing motor carrier safety. The States came to realize that a larger number of motor carriers could comply with safety laws and regulations if greater uniformity in enforcement were achieved. Several western States and Canadian Provinces formed the CVSA to reach agreement on issues such as inspections and out-of-service criteria. With the subsequent encouragement and support of the FHWA through the MCSAP, the CVSA expanded dramatically. Soon all 50 States and the District of Columbia became partners with the FHWA by adopting and enforcing, with minor variances, the FMCSRs and the Hazardous Materials Regulations (HMRs) of the Research and Special Programs Administration, and by using uniform inspection criteria.

In 1988, the FHWA published a comparison of the OOS Criteria and the FHWA's inspection criteria in 49 CFR Ch. III, subchapter B, appendix G. The fact that this comparison is so outdated and of little use today demonstrates one of the issues discussed below in the options for further regulatory action.

[1] See 49 CFR 395.13(a), and 396.9(c).

The Motor Carrier Act of 1991 (the Act) prescribed certain penalties for motor carriers or drivers found to have violated out-of-service orders (49 U.S.C. 31310(g)(2)). The Act made the adoption of such penalties by the States, and a program of random reinspection of vehicles placed out-of-service, a condition for receipt of Federal safety funding under the MCSAP. The Congress also made a State's adoption of the penalties for violation of out-of-service orders a condition of continued receipt of the State's full allocation of highway construction funds (49 U.S.C. 31311). The FHWA published implementing regulations on May 18, 1994 (59 FR 26022) (codified in part at 49 CFR 383.5 and 390.5, definitions of ''out-of-service criteria'').

What is the FHWA's Role in the Development of the OOS Criteria?

The FHWA is a non-voting member of the CVSA, as are representatives of numerous trade organizations, such as the American Trucking Associations (ATA), the National Private Truck Council (NPTC), the Owner-Operator Independent Drivers Association, Inc. (OOIDA), and the National Tank Truck Carriers, Inc. (NTTC). Committees of the CVSA consider and recommend modifications to the OOS Criteria, which are then accepted or rejected by a vote of CVSA member jurisdictions. The revised OOS Criteria are then submitted to the FHWA for its use.

The FHWA's interest in the OOS Criteria is three-fold. First, as part of the MCSAP program, each State develops a Commercial Vehicle Safety Plan (CVSP) which the FHWA must approve before authorizing funds. At the present time, the CVSPs of all the States provide for use of the OOS Criteria in conducting driver, vehicle, and hazardous materials inspections at the roadside.

Second, the FHWA's own safety investigators use the CVSA OOS criteria in the limited number of roadside inspections they perform each year. By following the CVSA OOS criteria in determining whether to place a driver or vehicle out-of-service, the FHWA is promoting consistency with these State-developed criteria and further uniformity in treatment of carriers nationwide.

Third, the FHWA also uses the OOS Criteria indirectly in determining the safety fitness of motor carriers (49 CFR 385.5). The FHWA's safety ratings for motor carriers include three categories: Satisfactory, Conditional, or Unsatisfactory (49 CFR 385.7). The ratings are based on a number of factors, including compliance with the FMCSRs.

The FHWA has recently placed greater emphasis on the safety performance of motor carriers in the rating process, and this action has led to additional emphasis on the OOS Criteria. The FHWA considers the vehicle out-of-service experience of motor carriers when calculating the vehicle factor, one of the six components of a motor carrier's safety rating. Rather than taking all roadside violations into account, the FHWA considers only out-of-service violations on the presumption that, because they are more serious, they are more likely to reflect on the inspection, repair, and maintenance programs of motor carriers.[2]

Why is the FHWA Undertaking This Action?

The agency believes that the OOS Criteria serve as guides for enforcement personnel in the exercise of discretion. The inspector determines if there is a violation of the underlying substantive safety regulation, whether it be the FMCSRs, a State law or regulation compatible with the FMCSRs, or the HMRs. When this determination has been made, the inspector faces a second question: may this particular driver or vehicle resume operations immediately in the face of this violation? The inspector exercises his or her discretion in answering this question. The OOS Criteria serve as guidelines to help the inspector determine whether the condition that he or she is observing is sufficiently hazardous to warrant placing the driver or CMV out-of-service, or conversely, whether the condition is not serious enough to prevent the driver and CMV from proceeding in violation of the regulation, deferring the repairs until a more convenient time and location. Thus, the OOS Criteria take on the character of enforcement tolerances.

The FHWA is responding today, however, to a growing perception within the industry that the CVSA OOS Criteria play a significant role in the enforcement of the FMCSRs, and that publication of the criteria as a part of the FMCSRs is therefore warranted. The FHWA believes that the time has come for a full discussion of the OOS Criteria: what are they; what is their purpose; how are they used; who is responsible for implementing them; and whether they are regulatory or merely guides for the use of necessary discretion in the enforcement of motor carrier safety.

The FHWA is undertaking this action because there has been criticism of the manner in which the CVSA OOS Criteria are currently utilized. On May 1, 1989, the Maine State Police petitioned the FHWA to incorporate the CVSA OOS Criteria by reference within the FMCSRs. On October 29, 1993, the CVSA, petitioned the FHWA to define ''out-of-service criteria,'' and incorporate the CVSA OOS Criteria into the FMCSRs by reference. On June 13, 1994, the OOIDA filed a motion with the FHWA to stay the imposition of certain final FHWA rules pertaining to penalties for violation of out-of-service orders, and cited in support of its motion the failure of the FHWA to formally incorporate these standards within the FMCSRs (FHWA Docket No. MC–92–13; FHWA–97–2279 at 59 FR 26022).

On April 20, 1995, the National Tank Truck Carriers, Inc. petitioned the FHWA to propose a rulemaking to establish the OOS Criteria as an appendix to the FMCSRs. On June 10, 1997, the FHWA granted the NTTC's petition, stating as part of the order entered that the FHWA would ''publish a rulemaking to discuss the entire issue and propose a resolution.'' This ANPRM initiates that rulemaking.

Public comment on the issues raised in this ANPRM will assist the FHWA in determining whether any further regulatory action is required.

What Should be the Future Scope and Effect of the OOS Criteria?

1. Maintain the current FHWA policy.

As stated above, the FHWA uses the current CVSA OOS Criteria in several ways. The FHWA has treated these criteria as enforcement tolerances, as guidelines for its own staff, and as acceptable alternatives for States to use in their State Enforcement Plans adopted under the Motor Carrier Safety Assistance Program. Although these criteria are mentioned in the Federal Motor Carrier Safety Regulations (see, e.g., 49 CFR sections 383.5 and 390.5, definitions of ''out-of-service orders''), the criteria themselves have not been adopted by the FHWA pursuant to notice and comment rulemaking. As

[2] The out-of-service history is drawn from the nearly 2 million vehicle inspections which are performed each year by the States participating in the MCSAP. If a motor carrier experiences a ratio of out-of-service inspections to ''clean'' inspections of 34 percent or greater (minimum of 3 inspections), the initial rating for the Vehicle Factor is Conditional. The FHWA believes setting the ratio, commonly called the ''out-of-service rate,'' at 34 percent is appropriate because the national average is 33 percent.

For a more detailed explanation of the Safety Fitness Rating Methodology, please consult FHWA Docket No. 94–22; FHWA–97–2252 (59 FR 47203), and see two notices: (1) Notice of Proposed Rulemaking, Safety Fitness Procedures; Safety Ratings, May 28, 1997 (62 FR 28826), and (2) Final Rule, Safety Fitness Procedures, November 6, 1997 (62 FR 60035).

noted above, some industry representatives believe that the FHWA's use of these criteria has evolved to the point where adoption of the criteria pursuant to notice and comment rulemaking is warranted and desirable.

As part of this rulemaking, the FHWA will consider the scope and effect of the OOS criteria and the use to which the FHWA puts these criteria. One possible alternative is to limit the use of the criteria in ways that do not require adoption of the criteria as regulations. Under its current policy, the FHWA considers the OOS criteria to be a tool to determine whether violations of the FMCSRs (or compatible State safety regulations) are so serious as to warrant ordering a motor carrier to cease using the driver or vehicle in question. The criteria themselves do not establish separate standards of conduct for regulated entities, nor is it intended that use of the criteria excuses other less serious violations of applicable safety regulations.

Accordingly, comment is requested on the fundamental question of how the FHWA should use any OOS criteria. Comment is also solicited on the desirability of adopting the OOS criteria after notice and opportunity for comment, even if such opportunity for further public participation is not required.

2. Adoption of the OOS Criteria in the FMCSRs.

Comment is requested on the alternative of adopting the OOS criteria as part of the Federal Motor Carrier Safety Regulations, either because of the use to which the criteria is or should be put or because of the desirability of the opportunity for public participation inherent in the process of adopting these criteria as Federal regulations. If the FHWA should adopt out-of-service criteria by regulation, can the FHWA avoid undermining the general principle that compliance with all applicable safety regulations is required? Should the FHWA specifically require the use of such federally adopted out-of-service criteria by States as a condition of MCSAP, or could the adopted criteria be one of several acceptable sets of criteria States could use? How would, or should, adoption of such criteria limit the discretion or Federal and State safety investigators to address discovered driver and vehicle safety violations at the roadside? Should investigators be limited to issuing out-of-service orders only to cases that expressly meet the adopted criteria? Should investigators be required to issue out-of-service orders in all cases where the criteria are met? How much discretion should investigators retain to address safety hazards discovered at the roadside that may not be precisely covered in the adopted criteria?

3. How should out-of-service criteria be adopted?

In addition to the basic question of whether the FHWA should adopt these criteria as regulations, the FHWA is requesting comment on the most desirable way to accomplish any such adoption. As explained above, the existing criteria are developed by the CVSA. Section 12 of Pub. L. 104–113 (see 5 U.S.C. 272 note) directs agencies to use technical standards that are developed or adopted by voluntary consensus standards bodies. The FHWA appreciates the work done by the CVSA in maintaining the current criteria, and recognizes the value of that effort. The FHWA is also mindful of the role of the States in the MCSAP program and the desirability of using State-developed criteria or standards in the MCSAP program whenever possible. Therefore, the FHWA is seeking specific comment on how the FHWA should adopt any out-of-service criteria. Should the FHWA, for example, consider adopting the CVSA criteria and incorporating them in the FMCSRs, either as an appendix to the FMCSRs or by seeking approval from the Director of the Office of the Federal Register to incorporate by reference the CVSA criteria into the FMCSRs? Should the FHWA set forth the text of any criteria adopted in the body of its safety regulations? What implications, if any, would there be for continued State development of out-of-service criteria if the FHWA adopts separate criteria or incorporates existing criteria? How can the FHWA best address the federalism implications of adopting out-of-service criteria that may be used by the States which have concurrent motor carrier safety jurisdiction? How can national uniformity be promoted, and how can maximum State and industry acceptance of the criteria be gained, by any proposed alternative adoption method?

Request for Comments

A copy of the CVSA OOS criteria has been placed in the docket and may be accessed and viewed electronically following the instructions provided at the beginning of the Supplementary Information section of this ANPRM. Copies of the OOS Criteria may also be obtained at offices of the Federal Highway Administration's Office of Motor Carriers located in each State. The telephone numbers of the State offices may be obtained by telephoning 1–800–832–5660.

The FHWA invites public comment on the OOS Criteria: What are they? Who should be responsible for implementing them? How should they be used? Are they appropriate for regulatory treatment, or should they remain as guides to the enforcement of motor carrier safety by participating jurisdictions? What should the scope and effect of the OOS Criteria be? Should they be referred to in the FMCSRs? If so, in what manner? Should they continue to be used in safety fitness determinations? The FHWA welcomes the presentation of alternatives to the approaches outlined in this document. The FHWA is not, however, seeking comment on the substance of the OOS Criteria at this time.

Rulemaking Analyses and Notices

All comments received before the close of business on the comment closing date indicated above will be considered and will be available for examination in the docket room at the above address. Comments received after the comment closing date will be filed in the docket and will be considered to the extent practicable. In addition to late comments, the FHWA will also continue to file in the docket relevant information that becomes available after the comment closing date, and interested persons should continue to examine the docket for new material.

Executive Order 12866 (Regulatory Planning and Review) and DOT Regulatory Policies and Procedures

The FHWA has determined that this action is not significant within the meaning of Executive Order 12866 or significant within the meaning of Department of Transportation regulatory policies and procedures. Due to the preliminary nature of this document and lack of necessary information on costs, the FHWA is unable to evaluate the economic impact of the potential regulatory changes being considered in this rulemaking. Based on the information received in response to this notice, the FHWA intends to carefully consider the costs and benefits associated with various alternative requirements. Comments, information, and data are solicited on the economic impact of any potential change.

Regulatory Flexibility Act

Due to the preliminary nature of this document and lack of necessary information on costs, the FHWA is unable to evaluate the effects of the potential regulatory changes on small entities. Based on the information received in response to this notice, the

FHWA intends, in compliance with the Regulatory Flexibility Act (5 U.S.C. 601–612), to carefully consider the economic impact of these potential changes on small entities. The FHWA solicits comments, information and data on these impacts.

Unfunded Mandates Reform Act

The FHWA will analyze any proposed rule to determine whether it would result in the expenditure by State, local, and tribal governments, in the aggregate, or by the private sector, of $100 million or more in any one year, as required by the Unfunded Mandates Reform Act of 1995 (2 U.S.C. 1532).

Executive Order 12612 (Federalism Assessment)

This action has been analyzed using the principles and criteria contained in Executive Order 12612. Because of the preliminary nature of this document, it is not possible to determine whether this proposal will have sufficient federalism implications to warrant the preparation of a federalism assessment. The FHWA is presenting this rulemaking as an opportunity to air complex issues.

These issues appear to have federalism implications. For example, adoption by the FHWA of the OOS Criteria as part of the FMCSRs would have an effect on States and municipalities. By making the OOS Criteria a part of the FMCSRs, the FHWA would be exercising control over those criteria. The CVSA might experience a diminished role in the development of policy standards for the exercise of enforcement discretion. Its member States might likewise experience a reduced role in their relationships with the Federal government. Incorporation by reference within the FMCSRs might have less of a federalism impact. The FHWA would have to conduct a rulemaking whenever the CVSA developed revisions of the OOS Criteria. But, because the language of the OOS Criteria would be more directly under the control of the CVSA, the federalism impact would be less than in the first approach. Maintaining the current policy would appear to have minimal federalism impact. The State-Federal partnership which has been operative in this area would presumably continue, and the CVSA and its member States would continue to play a large role in the maintenance of the OOS Criteria.

Executive Order 12372 (Intergovernmental Review)

The regulations implementing Executive Order 12372 regarding intergovernmental consultation on Federal programs and activities do not apply to this program. Catalog of Federal Domestic Assistance Program Number 20.217, Motor Carrier Safety.

Paperwork Reduction Act

This action does not contain a collection of information requirement for purposes of the Paperwork Reduction Act of 1995, 44 U.S.C. 3501–3520.

National Environmental Policy Act

The agency has analyzed this action for purposes of the National Environmental Policy Act of 1969 (42 U.S.C. 4321 *et seq.*) and it has determined that this action would not have any effect on the quality of the environment.

Regulation Identification Number

A regulation identification number (RIN) is assigned to each regulatory action listed in the Unified Agenda of Federal Regulations. The Regulatory Information Service Center publishes the Unified Agenda in April and October of each year. The RIN contained in the heading of this document can be used to cross reference this action with the Unified Agenda.

List of Subjects

49 CFR Part 395

Highway safety, Motor carriers, Reporting and recordkeeping requirements.

49 CFR Part 396

Highway safety, Motor carriers, Motor vehicle safety, Reporting and recordkeeping requirements.

Authority: 49 U.S.C. 31133, 31136, 31310, and 31502; sec. 345, Pub.L. 104–59, 109 Stat. 568, 613; and 49 CFR 1.48.)

Issued on: July 10, 1998.

Kenneth R. Wykle,

Federal Highway Administrator.

[FR Doc. 98–19153 Filed 7–17–98; 8:45 am]

BILLING CODE 4910–22–P

DEPARTMENT OF TRANSPORTATION

National Highway Traffic Safety Administration

49 CFR Part 571

[Docket No. NHTSA–98–4071; Notice 1]

RIN 2127–AH25

Federal Motor Vehicle Safety Standards; Occupant Crash Protection

AGENCY: National Highway Traffic Safety Administration (NHTSA), DOT.

ACTION: Notice of proposed rulemaking.

SUMMARY: This notice proposes to amend Federal Motor Vehicle Safety Standard on occupant crash protection to provide greater flexibility regarding the location of the telltale for air bag on-off switches installed in new motor vehicles. It would do so by eliminating the requirement that the telltale be located on the vehicle dashboard. No change would be made to the separate existing requirement that the telltale must be clearly visible from all front seat seating positions. This proposal would also add a requirement that the telltale be located within the vehicle's interior. The proposal is being issued, in response to a petition for rulemaking, to make the telltale requirements in the standard consistent with those in the agency's regulation governing the retrofitting of used vehicles with air bag on-off switches.

DATES: Comments must be received by September 3, 1998.

ADDRESSES: Comments should refer to the docket and notice number of this notice and be submitted to: Docket Management, Room PL–401, 400 Seventh Street, SW, Washington, DC 20590 (Docket Room hours are 10:00 a.m.–5 p.m., Monday through Friday.)

FOR FURTHER INFORMATION CONTACT: For non-legal issues: Mr. Clarke Harper, Chief, Light Duty Vehicle Division, NPS–11, National Highway Traffic Safety Administration, 400 Seventh Street, SW, Washington, DC 20590. Telephone: (202) 366–2264. Fax: (202) 366–4329.

For legal issues: Ms. Rebecca MacPherson, Office of Chief Counsel, NCC–20, National Highway Traffic Safety Administration, 400 Seventh Street, SW, Washington, DC 20590. Telephone: (202) 366–2992. Fax: (202) 366–3820.

SUPPLEMENTARY INFORMATION:

Table of Contents

I. Background
II. Details of the Proposal
III. Proposed Effective Date
IV. Rulemaking Analyses and Notices
V. Submission of Comments

I. Background

This notice responds to a petition from Volkswagen of America, Inc. seeking to amend Federal Motor Vehicle Safety Standard No. 208 (FMVSS No. 208) by eliminating the current requirement that the telltale for air bag on-off (cutoff) switches in new motor vehicles be located on the vehicle dashboard. Under the proposed change, the telltale requirements for new vehicles equipped with an on-off switch

would be consistent with the telltale requirements for retrofit on-off switches, i.e., vehicles that have been sold or leased to consumers. Part 595 exempts commercial entities from the statutory prohibition against making federally-required vehicle safety equipment inoperative for the purpose of allowing those entities to install retrofit switches.

On October 7, 1994, NHTSA published a notice of proposed rulemaking (NPRM) proposing to amend FMVSS No. 208 by giving manufacturers the option to install a manual passenger-side air bag on-off switch in new vehicles that either lacked a rear seat or had a rear seat too small to accommodate a rear-facing infant restraint (59 FR 51158). The proposal was issued in response to concerns that deploying air bags can seriously injure children appropriately restrained in a rear-facing infant restraint.

In the NPRM, NHTSA proposed requiring ''a telltale light on the dashboard that is clearly visible from both the driver and front passenger seating positions and that is illuminated whenever the passenger air bag has been deactivated by means of the cutoff device.'' NHTSA went on to explain that it

> believes that the indicator should be visible to the driver as a reminder that the passenger air bag is, or is not, functioning. NHTSA believes that the indicator should be also visible from the passenger seating position as a warning to non-infant occupants that they are not protected by their air bag.

NHTSA sought comment on whether a supplemental or additional warning for passengers (i.e., a telltale separate from the readiness indicator light) would minimize instances in which the air bag was unintentionally not activated.

In response to the NPRM, NHTSA received comments addressing the suitability of differing light levels, required wording, and combination with the existing air bag readiness indicator. Three parties commented on the proposed requirement that the telltale be located on the vehicle dashboard. The Insurance Institute for Highway Safety stated that the telltale warning light should be continuously illuminated and should be conspicuously placed on the instrument panel to increase the likelihood that the driver takes note of the current status of the air bag. The American Automobile Manufacturer's Association (AAMA) stated that ''proper placement of the device in the instrument panel could achieve two goals.'' According to AAMA, such placement would ensure that the telltale would be visible from both the driver and passenger seating positions and the telltale would not be in the direct line of sight to disrupt the driver in dark conditions. Mazda stated that it believed a telltale should be located near the instrument cluster or meter set, since it believed that the indicator should be visible mainly by the driver.

On May 23, 1995, NHTSA issued a final rule giving the manufacturers the option to install a manual passenger-side air bag on-off switch in vehicles with either no rear seat or with a rear seat inadequate for accommodating a rear-facing infant restraint (60 FR 27233). The final rule required the on-off switch be operable by the ignition key, be separate from the ignition switch, remain deactivated until affirmatively reactivated by turning the switch, and be accompanied by the telltale that is the subject of this notice.

The final rule dropped the proposed requirement that the telltale be adjustable to provide at least two levels of brightness. NHTSA was initially concerned that a single light, visible under all driving conditions, could be too bright for a driver who had adapted to dark ambient roadway conditions. Based on its review of the comments, NHTSA determined that a single level of brightness would be less design restrictive and would meet the agency's intended purpose. Accordingly, the less restrictive design requirement was adopted.

On November 21, 1997, NHTSA issued a final rule establishing Part 595 and allowing owners of used vehicles to have their vehicles retrofitted by commercial entities with air bag on-off switches, subject to certain conditions (62 FR 62406). Such switches are available for both driver and passenger seating positions as long as the conditions for each seating position are met by the vehicle owner and the entity that installs the switches. The switch requirements were largely patterned after the requirements for a passenger-side switch in FMVSS No. 208. However, in order to provide vehicle manufacturers with more flexibility in fitting a telltale light into a vehicle originally not designed to accommodate it, Part 595 did not include a requirement that the telltale for retrofit switches be installed in the vehicle dashboard. It did adopt the requirement that the telltale for a passenger-side air bag switch be clearly visible from both the driver and front passenger seat positions.

II. Details of the Proposal

On March 23, 1998, Volkswagen of America, Inc. submitted a petition requesting the agency to initiate a rulemaking proceeding to amend FMVSS No. 208 by eliminating the requirement that the telltale for an on-off switch in a new motor vehicle be located on the vehicle dashboard. Volkswagen maintains that the current requirement is unnecessarily design restrictive and that eliminating the dashboard requirement will not be detrimental to motor vehicle safety.

NHTSA is proposing to eliminate that requirement because the agency tentatively concludes that the requirement is not necessary to ensure the telltale's visibility. The agency believes that there are other locations (e.g., the console) within the vehicle's interior in which the telltale would be sufficiently noticeable by all front seat occupants. For example, General Motors installs telltale lights above the rearview mirror for vehicles with retrofit on-off switches.

NHTSA notes that in the final rule allowing retrofit air bag on-off switches, it did not require that the telltale be located on the vehicle dashboard. Instead, it simply specified that the telltale must be visible from the driver and front passenger seating positions and that the telltale must be located within the vehicle's interior. These conditions allow, but do not require, the placement of the telltale on the vehicle dashboard.

NHTSA proposes to amend FMVSS No. 208 to allow the placement of a telltale in a location other than the vehicle dashboard as long as the telltale is visible to all occupants of the front seat and is located within the vehicle's interior. This second requirement is being proposed because it would make FMVSS No. 208 consistent with Part 595 and because NHTSA believes external conditions like rain or snow could prevent the telltale from being clearly visible at all times.

The agency seeks comment on whether there would be any degradation of safety by not requiring uniformity of the telltale's location, i.e., on the vehicle dashboard.

III. Proposed Effective Date

Since the adoption of the proposal would relieve a restriction affecting safety, NHTSA plans to make the proposed amendment effective upon issuance of a final rule. NHTSA believes a delayed effective date would serve no purpose since the proposed changes would permit, but not require a change in the location of the switch telltale.

IV. Rulemaking Analyses and Notices

Executive Order 12866 and DOT Regulatory Policies and Procedures

NHTSA has considered the impact of this rulemaking action under E.O. 12866 and the Department of Transportation's regulatory policies and procedures. This rulemaking document was not reviewed under E.O. 12866, ''Regulatory Planning and Review.'' This action has been determined to be insignificant under the Department of Transportation's regulatory policies and procedures. NHTSA believes that this proposal, if adopted, would result in no additional cost to manufacturers and consumers as the proposal would only expand available options for the design of a telltale for factory-installed air bag on-off switches. Accordingly, the agency believes that the economic impacts of this proposal would be so minimal as not to warrant the preparation of a full regulatory evaluation.

Regulatory Flexibility Act

NHTSA has also considered the impacts of this notice under the Regulatory Flexibility Act. I hereby certify that this proposed rule would not have a significant economic impact on a substantial number of small entities. As explained above, this proposal would have minimal economic impact.

Paperwork Reduction Act

In accordance with the Paperwork Reduction Act of 1980 (P.L. 96–511), there are no requirements for information collection associated with this proposed rule.

National Environmental Policy Act

NHTSA has also analyzed this proposed rule under the National Environmental Policy Act and determined that it would not have a significant impact on the human environment.

Executive Order 12612 (Federalism)

NHTSA has analyzed this proposal in accordance with the principles and criteria contained in E.O. 12612, and has determined that this proposed rule would not have significant federalism implications to warrant the preparation of a Federalism Assessment.

Civil Justice Reform

This proposed rule would not have any retroactive effect. Under 49 U.S.C. 30103, whenever a Federal motor vehicle safety standard is in effect, a State may not adopt or maintain a safety standard applicable to the same aspect of performance which is not identical to the Federal standard, except to the extent that the state requirement imposes a higher level of performance and applies only to vehicles procured for the State's use. 49 U.S.C. 30161 sets forth a procedure for judicial review of final rules establishing, amending or revoking Federal motor vehicle safety standards. That section does not require submission of a petition for reconsideration or other administrative proceedings before parties may file suit in court.

V. Comments

Interested persons are invited to submit comments on this proposal. It is requested but not required that two copies be submitted.

All comments must not exceed 15 pages in length (49 CFR 553.21). Necessary attachments may be appended to these submissions without regard to the 15-page limit. This limitation is intended to encourage commenters to detail their primary arguments in a concise fashion.

If a commenter wishes to submit certain information under a claim of confidentiality, three copies of the complete submission, including the purportedly confidential business information, should be submitted to the Chief Counsel, NHTSA, at the street address given above, and two copies from which the purportedly confidential information has been deleted should be submitted to Docket Management. A request for confidentiality should be accompanied by a cover letter setting forth the information specified in the agency's confidential business information regulation. 49 CFR part 512.

All comments received by NHTSA before the close of business on the comment closing date indicated above for the proposal will be considered, and will be available for examination in the docket at the above address both before and after that date. To the extent possible, comments filed after the closing date will also be considered. Comments received too late for consideration in regard to the final rule will be considered as suggestions for further rulemaking action. Comments on the proposal will be available for inspection in the docket. NHTSA will continue to file relevant information as it becomes available in the docket after the closing date, and recommends that interested persons continue to examine the docket for new material.

Those persons desiring to be notified upon receipt of their comments in the rules docket should enclose a self-addressed, stamped postcard in the envelope with their comments. Upon receiving the comments, the docket supervisor will return the postcard by mail.

List of Subjects in 49 CFR Part 571

Imports, Motor vehicle safety, Motor vehicles, Rubber and rubber products, Tires.

In consideration of the foregoing, it is proposed that 49 CFR Part 571 be amended as follows:

PART 571—FEDERAL MOTOR VEHICLE SAFETY STANDARDS

1. The authority citation for part 571 would continue to read as follows:

Authority: 49 U.S.C. 322, 30111, 30115, 30117, and 30166; delegation of authority at 49 CFR 1.50.

2. Paragraph S4.5.4.3 of Section 571.208 would be revised to read as follows:

§ 571.208 Standard No. 208; Occupant crash protection.

* * * * *

S4.5.4.3 A telltale light in the interior of the vehicle shall be illuminated whenever the passenger air bag is turned off by means of the on-off switch. The telltale shall be clearly visible to occupants of all front seating positions. The telltale:

(a) Shall be yellow;

(b) Shall have the identifying words ''PASSENGER AIR BAG OFF'' on the telltale or within 25 millimeters of the telltale;

(c) Shall remain illuminated for the entire time that the air bag is ''off'';

(d) Shall not be illuminated at any time when the air bag is ''on''; and,

(e) Shall not be combined with the readiness indicator required by S4.5.2 of this standard.

* * * * *

Issued on July 14, 1998.

L. Robert Shelton,

Associate Administrator for Safety Performance Standards.

[FR Doc. 98–19155 Filed 7–17–98; 8:45 am]

BILLING CODE 4910–59–U

DEPARTMENT OF TRANSPORTATION

National Highway Traffic Safety Administration

49 CFR Part 571

Denial of Petition for Rulemaking; Federal Motor Vehicle Safety Standards

AGENCY: National Highway Traffic Safety Administration (NHTSA), Department of Transportation.

ACTION: Denial of petition for rulemaking.

SUMMARY: This document denies Mr. John K. Roberts' petition to amend Federal Motor Vehicle Safety Standard (FMVSS) No. 108, Lamps, reflective devices, and associated equipment, to add requirements regarding the maximum time for a stop lamp to reach 90 percent of its required illumination. A requirement of this nature could be met using currently-available technology such as light emitting diodes (LEDs), neon lamps, hot filament systems, or shuttered systems. However, the costs associated with such a requirement would be far in excess of its benefits.

FOR FURTHER INFORMATION CONTACT: Mr. Chris Flanigan, Office of Safety Performance Standards, NHTSA, 400 Seventh Street, SW, Washington, DC 20590. Mr. Flanigan's telephone number is: (202) 366–4918. His facsimile number is (202) 366–4329.

SUPPLEMENTARY INFORMATION: By letter dated March 29, 1997, Mr. Roberts petitioned the agency to amend FMVSS No. 108 to create a stop lamp ''rise time'' requirement. He suggested that the standard require stop lamps to reach 90 percent of their presently-required intensity within 75 milliseconds (ms) following actuation. Conventional incandescent lamps take about 250 ms to reach 90 percent of their required intensity. In an emergency stop situation, this decrease in illumination time would allow an extra fraction of a second (approximately ⅙th of a second), for a following driver's brake actuation time.

Vehicle manufacturers could meet this requirement by using one of four currently available technologies. LED and neon lamps, which are both used on current vehicles, could meet the requirement as suggested by Mr. Roberts. These types of lamp systems can illuminate to 90 percent of their required intensity in well under 75 ms. Another method of meeting the suggested requirement would be to use a hot filament incandescent lamp. For this type of system, a conventional incandescent lamp would be constantly supplied with a low voltage which would not be enough to illuminate the lamp, but would decrease the illumination time. This is because the lamp is already supplied with a portion of the energy required for illumination. Finally, a shuttered light system could be used to comply. This type of system uses a centralized light source and individually shuttered fiber optic bundles to distribute and modulate the light sent to the stop lamps.

Mr. Roberts stated that Standard No. 108 should address the time lag occurring between the actuation of stop lamps and their rise to effective levels of intensity. He believes that the demands on a driver are much greater today than when the standard was promulgated, and therefore, this aspect of stop lamp systems should be regulated. He cites several vehicle design trends which lead him to believe that minimum stop lamp rise times are necessary. These include: enhanced capability for some vehicles to decelerate abruptly due to improved brakes, tires, and suspension systems; the use of lighter (and more electrically resistive) vehicle wiring harnesses to improve vehicle fuel economy; and increasingly overburdened vehicle electrical supply systems. He states that a vehicle travels seven meters or nearly 1.5 car-lengths at typical highway speeds during a typical incandescent lamp's 250 ms rise time.

Agency Position

Based on NHTSA's analyses, the requirement that Mr. Roberts suggested would produce relatively minor benefits. A May 1993 DOT report, ''Assessment of IVHS Countermeasures for Collision Avoidance: Rear end Crashes,'' (DOT HS 807 995) found that both vehicles were moving in only 25 percent of all rear-end crashes. Further, in only four percent of these crashes was ''following too closely'' or ''tailgating'' cited as the principal cause. With respect to this one percent of all rear-end crashes (four percent of 25 percent), Mr. Roberts' suggestion would only provide a benefit if all the following conditions were met *simultaneously*: (1) The following driver is attentive enough to notice a ¼th second decrease in stop lamp actuation time; (2) the following distance is so short that the following driver cannot apply the brake fast enough to avoid the collision; (3) the lead driver decelerates so rapidly that the following driver cannot apply the brake fast enough to avoid a collision, and; (4) the following driver applies the brake upon first seeing the stop lamp without waiting for any additional clues such as closing distance reduction, lead vehicle pitching, or tire squeal. Even if all these factors occur, it seems unlikely that even one percent of all rear end crashes would be eliminated or reduced in severity by such a requirement.

While there would be some small level of benefits if Mr. Roberts' suggestion were to be included in the standard, such benefits would be greatly outweighed by the costs involved. LED, neon, and shuttered light systems would cost manufacturers upwards of $30 per vehicle. The least expensive of the four available technologies would be the hot filament systems. These systems would cost the industry approximately $15 per vehicle. To incorporate these systems, vehicles would need extra wiring and circuitry to keep the filament of the incandescent bulb powered to a level that is just below illumination. Based on an annual U.S. production of 16,000,000 vehicles, the suggested requirements would cost at least $240,000,000 per year to vehicle manufacturers which would be passed on to the consumer. This cost *does not* include manufacturer installation and other costs such as manufacturer and dealer profits. The agency has found in the past that these costs generally add about 50 percent onto the original equipment cost. These additional factors thus would raise the cost to the consumer further. Also, there would be an additional cost incurred by the consumer due to the extra power required to keep the lamp filaments constantly powered. This would lead to an increase in fuel consumption.

In order to confirm our belief that the benefits of fast rise brake requirements would be small, NHTSA analyzed data to compare the crash involvement of vehicles with LED and neon CHMSLs to similar vehicles with conventional incandescent CHMSLs. Specifically, Maryland state files were searched for model year 1994–1996 sport utility vehicles and vans that were struck in the rear while slowing or stopping. These types of vehicles were chosen because they had the highest percentage of vehicles which had LED and neon CHMSLs and were fairly similar in size. When comparing the crash involvement of LED and neon CHMSL vehicles to the incandescent CHMSL vehicles, there was no statistical difference found between designs. This may reflect the relatively small percentage of the vehicle fleet now in service with LED and neon CHMSLs, so that no statistically valid study may yet be conducted. Alternatively, it may be that the effects of lesser rise times do not show up in crash statistics. Whatever the case, the current data do not show safety benefits on the road from this technology.

Although the agency does not have data at this time to support such a requirement, it seems intuitive that there could be some value to a stop lamp illuminating faster. Because there are potential benefits, the agency will revisit this issue in the future when there are more vehicles on the road with LED and neon stop lamps. Based on NHTSA's examination of recent model year vehicles' CHMSLs, manufacturers are moving towards using more LED and neon light sources for this application.

Further, LEDs are beginning to be used as a light source for the main stop lamps as well. When the population increases, perhaps this will give the agency sufficient data to support proposing such a requirement.

In accordance with 49 CFR part 552, this completes the agency's review of the petition. The agency has concluded that there is no reasonable possibility that the amendment requested by the petitioner would be issued at the conclusion of a rulemaking proceeding. Accordingly, it denies Mr. Roberts' petition.

Authority: 49 U.S.C. 30103, 30162; delegation of authority at 49 CFR 1.50 and 501.8.

Issued on: July 13, 1998.

L. Robert Shelton,

Associate Administrator for Safety Performance Standards.

[FR Doc. 98–19154 Filed 7–17–98; 8:45 am]

BILLING CODE 4910–59–P

DEPARTMENT OF TRANSPORTATION

National Highway Traffic Safety Administration

49 CFR Part 571

[NHTSA Docket No. 98–4027, Notice 1]

RIN 2127–AG01

Federal Motor Vehicle Safety Standards; Steering Control Rearward Displacement

AGENCY: National Highway Traffic Safety Administration (NHTSA), DOT.

ACTION: Termination of rulemaking.

SUMMARY: This document terminates a rulemaking proceeding in which the agency proposed to exclude from its standard on steering control rearward displacement air bag-equipped passenger cars and other light vehicles certified as complying with the agency's occupant crash protection standard based upon the frontal barrier crash test. The agency proposed this exclusion because the engineering need to provide a stable air bag platform in order to perform consistently during an unrestrained dynamic crash test would ensure that vehicle manufacturers design their vehicles so that there would be little steering control rearward displacement. That necessity would obviate the need for manufacturers to conduct another crash test just to certify steering control rearward displacement performance.

However, since the proposal, the agency has temporarily allowed the manufacturers to certify their vehicles to the occupant protection standard based upon an unrestrained sled test and a restrained (or belted) barrier test. The capability of the steering column to provide a stable platform for the air bag is not tested in a sled test since no structural deformation of the structure occurs nor does the restrained occupant 30 mph barrier test adequately evaluate the platform stability since the belted dummy does not significantly load the steering assembly. NHTSA anticipates that nearly all manufacturers will certify to the unrestrained occupant protection standard based on the less rigorous sled test procedure. Therefore, the agency is terminating this rulemaking.

FOR FURTHER INFORMATION CONTACT:

On technical matters: Mr. John Lee, in the Office of Crashworthiness Standards, telephone: 202–366–4924, facsimile: 202–493–2739, e-mail: jlee@nhtsa.dot.gov.

On legal matters: Mr. Paul Atelsek, in the Office of the Chief Counsel, telephone: 202–366–2992, e-mail: patelsek@nhtsa.dot.gov.

The mailing address is: National Highway Traffic Safety Administration, 400 Seventh Street, SW, Washington, DC, 20590.

SUPPLEMENTARY INFORMATION:

I. Background

Pursuant to the March 4, 1995 directive, ''Regulatory Reinvention Initiative,'' from the President to the heads of departments and agencies, NHTSA undertook a review of all its regulations and directives. During the course of this review, the agency identified several regulations as potential candidates for rescission or amendment. One of these regulations was Standard No. 204, *Steering Control Rearward Displacement.* The agency concluded at that time that requiring compliance with the standard appeared to be redundant for certain vehicles, given the actions which were separately required to be taken to comply with Standard No. 208, *Occupant Crash Protection.*

Standard No. 204 specifies a dynamic crash test to measure the rearward displacement of a vehicle's steering column to ensure that the driver is not ''speared'' by the column. The standard specifies that the upper end of the steering column and shaft may not be displaced horizontally rearward more than 5 inches (127 mm) in a 30-mile-per-hour frontal barrier crash test. The standard applies to passenger cars and other light vehicles.

Passenger cars and light vehicles are also required to pass a dynamic test specified in Standard No. 208, *Occupant crash protection.* For unrestrained occupants, Standard No. 208 requires either a frontal impact crash test into a rigid barrier at 30 mph or a dynamic sled test, with the performance measured by the impact forces on an anthropomorphic test dummy rather than by the displacement of a vehicle component. Air bags became mandatory in all passenger cars on September 1, 1997, and will be required in all light vehicles by September 1, 1998. Since March 19, 1997, it has been permissible to certify vehicles on the basis of a sled test instead of a crash test. The agency believes that the great majority of auto manufacturers are now certifying vehicles using the sled test.

On November 16, 1995, the agency published a Notice of Proposed Rulemaking, (60 FR 57565) proposing that vehicles be excluded from having to comply with Standard No. 204 if these vehicles were certified to comply with the frontal barrier crash test requirements of Standard No. 208 by means of an air bag. The basis for the proposal was that the engineering considerations that govern designing a vehicle with air bags would ensure that the vehicle would have the same performance for steering control rearward displacement as is currently required by Standard No. 204. One of the most fundamental engineering considerations when designing an air bag equipped vehicle is to provide a secure platform for the air bag. The designer must know the relative location of the air bag and the protected occupant during a crash because, if the air bag platform were moving up or down, or backward or forward during a crash, it could adversely affect air bag performance.

Since the driver's air bag is located in the steering column, the NPRM stated that the engineering measures necessary to provide a secure air bag platform will also ensure that Standard No. 204's specified performance for steering control rearward displacement is satisfied, even if the standard were no longer applicable. In case the public knew of some factors that NHTSA had not considered, NHTSA also asked for comment on whether there was any possibility that the proposed Standard No. 204 exclusion might result in an increase in injuries not protected against by Standard No. 208. The NPRM stated that the proposed rule would have minor, nonquantifiable cost savings. The public comment period closed on January 16, 1997.

Subsequent to the issuance of the NPRM on Standard No. 204, on March 19, 1997, in order to facilitate the

depowering of air bags, the agency temporarily amended Standard 208 to permit vehicle manufacturers to certify their vehicles using a sled test procedure, rather than a crash test. In the sled test, there is no possibility of steering column movement due to deformation of the vehicle structure from crash forces, regardless of how good or bad the steering column design. Although the standard still permits manufacturers to certify their vehicles using the frontal barrier crash test using an unrestrained test dummy, as specified in S5.1, as noted above, essentially all manufacturers are now using the sled test for Standard No. 208 certification. The standard still requires a belted barrier test. Currently, the agency is in the midst of developing an NPRM on improved air bags that may reinstate some form of barrier test requirement.

II. Summary of Public Comments

The agency received six comments on the proposal to exclude air bag equipped vehicles from Standard No. 204. Advocates for Highway and Auto Safety (Advocates) and Mr. Lee F. Graser (an automobile reconstructionist) were generally opposed to the proposal. The Insurance Institute for Highway Safety (IIHS), the American Automobile Manufacturers Association (AAMA), and two auto manufacturers, Volkswagen and Mitsubishi, supported the proposal. The following is a brief summary of these comments.

As noted above, two commenters disagreed with excluding these vehicles from Standard No. 204. Mr. Lee F. Graser, President of LAS-KDS Inc. (an automobile reconstructionist) commented that the current standard was ''incredibly successful in removing the ''spear-like'' qualities from the steering column.'' He based his comment on 30 years of experience in rebuilding automobiles damaged in a crash, and examining thousands of wrecked automobiles. He agreed that vehicles will continue to meet the crash test standards at 30 miles per hour, but said that in more severe (i.e., higher speed) crashes, the exclusion from the requirement will remove an important safety margin and result in the reintroduction of a hazard eliminated long ago.

Advocates was concerned that the exclusion would exacerbate a danger that it believes exists even with Standard No. 204 in place. Its main concern was the ''dangers due to the proximate positioning of the drivers to the steering wheel air bag modules.'' It noted that short women and many older drivers must sit further forward than other drivers to comfortably reach the steering wheel. In such cases, it stated, the distance from the air bag to the driver's chest would be 6.5 to 4.5 inches. Drivers seated in this zone could be injured by the deploying air bag. Advocates' apparent concern with this exclusion is that, without Standard No. 204, the steering column would move rearward, even closer to the driver, prior to air bag deployment. If this occurred, there would be a very forceful impact of the air bag on the driver (air bag deployment force would be greater on a driver closer to the housing).

Advocates also argued that there was no supporting data for the exclusion and therefore the agency's proposed action could be considered capricious. Advocates commented that NHTSA has no data to support the presumption that manufacturers will continue to maintain compliance with Standard No. 204 if this exclusion is provided. Advocates also suggested that NHTSA needs test data showing that vehicles that do *not* comply with Standard No. 204 could still ensure safety of small passengers and not increase the risk of exacerbating trauma from steering wheels.

Finally, Advocates noted the request for comment that NHTSA had issued on air bag-related injuries (NHTSA Docket 74–14, Notice 97, 60 FR 65554, November 9, 1995). Advocates stated that it could not understand why the agency would complicate the understanding of this complex injury issue by adding another major variable (i.e., a presumed increase in steering wheel movement).

Four commenters agreed with excluding air bag equipped vehicles from Standard No. 204. Mitsubishi concurred without substantive comment. Volkswagen concurred and commented that the exclusion would save it testing costs of about $20,000 plus the cost of the vehicle for each car line because an extra crash test was required by Standard No. 204. It stated that the savings might be as much as $700,000 on a new car line, because a prototype vehicle would have to be used in the testing.

Volkswagen also noted that a proposal to make a similar exclusion from the ECE version of this standard is under discussion in Europe, implying that NHTSA should adopt the proposal in the interest of harmonization.

The AAMA supported the proposal. The AAMA confirmed that for an air bag equipped vehicle, the steering column location must remain relatively stable during a Standard No. 208 barrier test to consistently meet the test requirements. It provided an analysis of NHTSA's own Standard No. 204 ''indicant'' test reports for member companies: GM, Ford and Chrysler. The AAMA stated that the NHTSA indicant test data showed that the displacement was zero in most cases and well below the 5.0 inch (12.7 cm) limit in all cases. The AAMA also pointed out that, in a 1981 evaluation of the standard, the agency found that steering wheel rearward displacement was highly correlated to the vehicle's change in velocity during the crash (Delta V). ''An Evaluation of Federal Motor Vehicle Safety Standards for Passenger Car Steering Assemblies'', Standard No. 203—''Impact Protection for the Driver'', Standard No. 204 ''Rearward Column Displacement,'' January 1981, NHTSA Technical Report DOT HS 805 705. The agency evaluation indicated that, in crashes with a Delta V of less than 15 mph, there was virtually no rearward displacement. The AAMA did not provide any data from the motor vehicle manufacturers. It agreed that the proposal should be effective 30 days after the final rule.

The IIHS supported the proposed exclusion from Standard No. 204, stating that the current dynamic test in Standard No. 208 with an unbelted dummy is more than sufficient to limit excessive rearward steering wheel displacement in a centric crash specified by Standard No. 204. However, it was concerned that Standard No. 204's centric flat barrier crash test is inadequate, because steering control rearward displacement continues to be a problem in offset crashes. To support this offset crash concern, IIHS cited data from offset crash tests of 16 vehicles that showed rearward displacements of up to 6.7 inches (17 cm). It also provided a summary of an actual fatal offset crash which it believes might not have been fatal if the column had not moved rearward by 7.5 inches (19 cm). IIHS urged NHTSA to continue work on offset testing, and explore rulemaking on the subject.

III. Discussion of Issues

A. Don't Change a Standard That Works

Mr. Graser stated that Standard No. 204 has resulted in significant improvement in occupant protection by removing the spear-like qualities of the steering column. Advocates stated that there was no basis for the agency's presumption that motor vehicle manufacturers will maintain compliance after exclusion from Standard No. 204.

The agency agrees with Mr. Graser that designs that conform to Standard No. 204 mitigate chest injuries. The standard did accomplish its purpose,

according to the agency's analysis. In the agency's regulatory evaluation of the benefits of its steering column regulations (Standard Nos. 204 and 203, *Impact Protection for the Driver From the Steering Control System*), NHTSA estimated that the two steering column standards in tandem were cost-effective and prevented 1,300 fatalities and 23,000 nonfatal injuries per year when all automobiles complied. (Note that the agency has already excluded from Standard No. 203 vehicles that comply with Standard No. 208 using air bags because it concluded that requiring compliance with Standard No. 203 was redundant (40 FR 17992, April 24, 1975)). Therefore, Standard No. 204 did prompt some useful changes in steering column design.

The NPRM was based on the assumption that manufacturers would have to conduct a dynamic crash test with unbelted dummies for Standard No. 208, an assumption that is no longer valid.

Vehicle manufacturers must design a stable air bag platform to ensure good, repeatable performance for the air bag in a crash. In other words, steering columns must be designed to ensure the air bag mounted in the steering wheel hub will remain in a constant position relative to the driver during a crash. However, Standard No. 208's unbelted performance requirements would adequately control steering column movement only during a full-barrier crash test. Conversely, the sled test does not ensure that the steering column will be adequately designed. Additionally, the belted occupant 30 mph barrier test, which is still required, does not adequately evaluate the air bag platform stability since the belted dummy does not significantly load the steering assembly.

B. Risk of Air Bag Injury to Small Occupants

In response to Advocates' concern about negative safety impacts on smaller occupants, the agency notes that rearward displacement of the steering column may not contribute to close proximity air bag deployments because displacement and deployment may occur at different times during a crash. To illustrate, in a standard barrier test the air bag begins to deploy between 15 to 20 milliseconds after impact and is completely deployed by 50 to 60 milliseconds after impact. In these crash tests, steering column dynamic rearward displacement and steering column collapse almost always occur after completion of air bag deployment, starting at about 60 milliseconds. During a Standard No. 208 unbelted full barrier impact compliance test, this steering column-occupant interaction is measured by the Hybrid III dummy. Therefore, excessive rearward displacement of the steering column in unbelted full barrier-type impacts would likely impact the dummy and cause a failure of the Standard No. 208 test. However, due to the wide variety of crash types in the real-world, the agency can see the potential for situations where steering column movement and air bag deployment could occur at the same time.

C. Supporting Data

In response to Advocates' complaint that NHTSA has no data to justify this proposed exclusion, NHTSA based its NPRM on an engineering analysis of the steering column design requirements implied or necessitated by the then-existing Standard No. 208 full-barrier impact requirements.

Moreover, it would have been impossible to generate the test data on non-compliant vehicles that Advocates says is necessary. Evidence indicates that all vehicle designs comply with Standard No. 204, so there are no non-complying vehicles to test. NHTSA reviewed the results of Standard No. 204 compliance tests before publishing the NPRM. The results of that review are in the docket. In that review, the agency found that in the last 28 years, there have been three cases worthy of further investigation, but no actual non-compliances. No air bag-equipped vehicle has failed this test.

The agency reviewed its 1996 calendar year information requests to vehicle manufacturers, which resulted in the submission of 36 reports of Standard No. 204 compliance tests. This 1996 sample includes 25 passenger cars and 11 light trucks. A summary of the steering column rearward displacement data from these manufacturer reports has been placed in the docket. The average value of the maximum dynamic horizontal deflection was 42 millimeters (1.6 inches). The range of horizontal deflections ranged from 0 mm (0 in.) to 99 mm (3.9 in.).

However, history may not be a guide when the assumptions are changed. NHTSA agrees with Advocates that there is no evidence that sled-tested and belted-barrier-tested vehicles will continue to comply with Standard No. 204.

D. Cost

The agency believes the cost savings that Volkswagen suggested would result from excluding vehicles from Standard No. 204 certification are overly optimistic. Vehicle manufacturers would probably ''piggyback'' tests on a prototype, i.e., the single test of a prototype vehicle could include indicant tests of Standard Nos. 204, 208, 212, and 301. Therefore, computer modeling and piggyback testing would significantly reduce this cost burden, especially during the vehicle developmental phase.

E. Offset Testing Program

In response to IIHS' urging that NHTSA pursue offset testing, the agency notes that an offset testing program is part of the Standard No. 208 Upgrade program, one of the elements in NHTSA's Strategic Execution Plan. Additionally, on January 2, 1998, the Center for Auto Safety (CAS) submitted a petition for rulemaking, requesting the addition of an offset test requirement within Standard No. 208.

The agency's FY 1997 and FY 1998 appropriations included funding to work on establishing a frontal offset crash protection safety standard. NHTSA will analyze the steering column behavior in offset crashes as part of this effort. The issues raised by IIHS and CAS, of whether to include a steering column displacement restriction within the requirements of an offset test standard, will be included in the offset program decision-making process.

IV. Agency Decision

In the final rule (March 19, 1997; 62 FR 12960) enhancing manufacturers' abilities to depower air bags, NHTSA decided to allow the sled test as a temporary measure given the need to provide manufacturers with maximum flexibility to respond rapidly to the risk posed by air bag activation in low speed crashes. In the final rule's preamble, NHTSA discussed the disadvantages of the sled test as an indicator of real world performance, including the fact that the sled test does not evaluate ''the steering column's energy absorbing characteristics and load bearing capability.'' (62 FR at 12966). Sled testing effectively removes the measurement of the stability of the steering column as a factor affecting measured levels of occupant protection performance. NHTSA has never proposed to exclude from Standard No. 204 vehicles whose certification of compliance with Standard No. 208 was based upon the sled test or the belted barrier test.

NHTSA understands that almost all the vehicle manufacturers are now certifying compliance with Standard No. 208 based on the sled test, instead of the unbelted frontal barrier test. Further, the manufacturers have

indicated that they will continue to rely on the sled test option while it remains available.

The March 19, 1997, final rule provided that the sled test option would expire on September 1, 2001. Several petitions for reconsideration have been filed requesting the agency to extend that date or to make the option permanent. NHTSA is currently considering those petitions. In addition, as part of its advanced air bag rulemaking, the agency is considering the possibility of requiring some form of barrier test.

Based on these understandings, NHTSA is terminating rulemaking to exclude from Standard No. 204 vehicles that comply with Standard No. 208. Given that the vehicle manufacturers are expected to rely on the sled test (to meet Standard No. 208 requirements) for the next several years, there is no need during that period for an exclusion from Standard No. 204 for vehicles certified to Standard No. 208 based on the barrier test. If circumstances change in the future, the agency will consider appropriate action at that time.

(Authority: 49 U.S.C. 322, 30111, 30115, 30117, and 30166; delegations of authority at 49 CFR 1.50 and 501.8)

Issued on: July 14, 1998.

L. Robert Shelton,

Associate Administrator for Safety Performance Standards.

[FR Doc. 98–19217 Filed 7–17–98; 8:45 am]

BILLING CODE 4910–59–P

DEPARTMENT OF TRANSPORTATION

National Highway Traffic Safety Administration

49 CFR Part 571

Denial of Petition for Rulemaking; Federal Motor Vehicle Safety Standards

AGENCY: National Highway Traffic Safety Administration (NHTSA), DOT.

ACTION: Denial of petition for rulemaking.

SUMMARY: This document denies a petition by Whizzer Motorbike Company for rulemaking which would exclude it and other motorized bicycles from all DOT regulations. Petitioner argued that the vehicle's low speed and small size justified such exclusion. However, the agency found this conclusion unsupported and denies the petition. Motorized bicycles, which may have a maximum speed of up to 25 miles per hour and are found on the public streets, must be afforded the same level of protection that now exists for their category under the Federal motor vehicle safety standards where they are defined as ''motor driven cycles,'' which are ''motorcycles with a motor which produces 5 brake horsepower or less.''

FOR FURTHER INFORMATION CONTACT: Jere Medlin, Office of Safety Performance Standards, NHTSA (202–366–5276).

SUPPLEMENTARY INFORMATION:

Introduction

The agency wishes to use this forum to reiterate its long-standing policy on the regulatory treatment of powered bicycles.

On October 2, 1997, the Whizzer Motorbike Company of Orange, California, petitioned the Administrator of the National Highway Traffic Safety Administration (NHTSA) for ''*relief* from meeting DOT regulations'' (petitioner's emphasis). The basis of its petition was that its product is ''a motor-assisted bicycle, requiring human power to start from a static position,'' designed to carry one person, has less than 2 horsepower, weighs ''less than 60 lbs. GVWR,'' and ''will not exceed 25 miles per hour.'' In Whizzer's opinion, the vehicle may be used for ''very limited transportation,'' but ''it is not practical for utility purpose other than very short distances.''

NHTSA advised Whizzer on November 17, 1997, that it viewed the petition as one for rulemaking that would exclude the Whizzer and other vehicles in its class from DOT requirements. One week later, Whizzer assented to this treatment, adding the justification that its product was a nostalgia vehicle and its engine a design of 1930s technology.

Background

Over the years, NHTSA has been asked about the applicability of the Federal motor vehicle safety standards (FMVSSs) to bicycles with small motors attached. In responding to these requests, the agency has begun by deciding whether the vehicle for which an interpretation was sought was, in fact, a motor vehicle subject to NHTSA's jurisdiction. NHTSA's enabling statute, 49 U.S.C. Chapter 301, defines a motor vehicle in pertinent part as ''a vehicle driven or drawn by mechanical power and manufactured primarily for use on the public streets, roads, and highways * * *.'' (49 U.S.C. 30102(a)(6)). Since a bicycle that does not have any motor is a vehicle driven by muscular power instead of mechanical power, such a bicycle is not a ''motor vehicle'' regulated by NHTSA.

However, the addition of a motor to a bicycle may create a motor vehicle. Whether the motor in fact does so depends upon the extent to which it propels the bicycle to which it has been attached. Some motors are characterized as providing a ''power assist'' to the bicycle operator. Within this category of motorized bicycle, the agency has decided that if the motor is sufficient to propel the bicycle without any muscular input from the operator, even though at a diminished speed, then the bicycle is driven by mechanical power within the meaning of the definition and is a motor vehicle. On the other hand, if the power assist is insufficient alone to propel the bicycle, and therefore only supplements muscular power (as in helping traverse hilly terrains), the bicycle is not a motor vehicle under NHTSA regulations.

If a motorized bicycle is treated as a motor vehicle, it is classified, in the first instance, as a ''motorcycle'' for the purposes of the FMVSSs. Under 49 CFR Sec. 571.3(b), a motorcycle is defined as a motor vehicle with motive power having a seat or saddle for the use of the rider and designed to travel on not more than three wheels in contact with the ground. As a motorcycle, a motorized bicycle may also be classified as a ''motor driven cycle.'' A motor-driven cycle is defined as a motorcycle with a motor that produces five brake horsepower or less. Certain FMVSSs, such as the lighting standard, FMVSS No. 108, specify less stringent requirements for motor-driven cycles than for other motorcycles. FMVSS No. 108 allows motor-driven cycles to have a headlamp with a single beam, but requires other motorcycles to have a headlight with upper and lower beams). Other standards specify lesser requirements for motor driven cycles of limited performance, e.g., ''a motor-driven cycle whose speed attainable in 1 mile is 30 mph or less * * *'' (FMVSS No. 122, establishing motorcycle braking requirements). FMVSS No. 123, which specifies requirements for motorcycle controls and displays, allows a motor-driven cycle the alternative of a rear wheel brake control located on the left handlebar rather than on the right foot control.

Petitioner's Argument

As noted in the Introduction, Whizzer bases its argument for relief on the extremely low level of performance of its motorized bicycle. The petitioner claims that this is essentially a bicycle assisted by a small motor, less than two horsepower, and that while it may be used for very limited transportation, it is not practical for utility purposes other than very short distances. The petition

requests relief from meeting the FMVSS because the Whizzer requires human power to start from a static position, it will not exceed 25 mph., it is extremely light weight, and is designed to accommodate one person only. In its October 2, letter, the petitioner argued that it should be allowed to offer the Whizzer without lighting, so as to deter night riding. Recognizing that some riders will still go out at night, the petitioner offered to provide a large prominent warning decal with the advisory ''not approved for night riding''.

Finally, the petitioner claims that the Whizzer is a nostalgia vehicle. The petitioner did not elaborate on this point. NHTSA assumes that the petitioner is arguing that since its goal is to produce a replica of a 1940s style vehicle, it should not be required to depart from the original design in order to conform the bicycle to standards intended for vehicles manufactured a half century later.

Discussion and Decision

NHTSA concludes that the Whizzer is a motor vehicle. This conclusion is based on the information presented by the petitioner that the Whizzer is fully capable of 25 mph sustained speed without pedal assist. Since the Whizzer has two wheels and its motor is less than 2 horsepower, it is classified not only as a motorcycle, but also as a motor-driven cycle.

The petitioner has provided no justification for excepting the Whizzer and other motorized bicycles from compliance with the FMVSS. Although the Whizzer is intended to replicate a design of the 1940s, the public expects, and is entitled to, a greater degree of safety on the road than was available 50 years ago. Federal motor vehicle safety standards are now in place for the purpose of protecting the operators of two-wheeled vehicles in an environment of heavier road traffic than existed half a century past. For 30 years, motor-driven cycles have been built and certified to comply with FMVSS addressing not only lighting, braking, and controls and displays as discussed, but also with FMVSS covering brake hoses, mirrors, tires and rims, and glazing if provided. Over the years, NHTSA has learned the importance of ensuring that small vehicles are detectable by larger users of the roadway. Detectability is enhanced by a vehicle's lamps and reflectors. Whizzers of the 1940s were equipped with a magneto and no electrical generating capability, and the only lamps available were add-on lamps powered by self-contained batteries. Today, motor-driven cycles have either generators or alternators to provide power for Federally required headlamps, taillamps, turn signals and stop lamps. Congress expected NHTSA to promulgate standards that would continue to allow the public a wide choice of vehicles, but it did not intend that NHTSA do so at the expense of safety. Therefore, the agency does not accept the petitioner's argument that it should be allowed to produce a motor-driven cycle without the safety equipment found on other motor-driven cycles, simply because to require compliance might detract from the authenticity of the vehicle.

NHTSA has completed its technical review pursuant to 49 CFR Sec. 552.6, and, taking into account other appropriate factors as discussed above, denies the petition by Whizzer Motorbike Company.

Authority: Delegations of authority at 49 CFR 1.50 and 501.8.

Issued on: July 15, 1998.

L. Robert Shelton,

Associate Administrator for Safety Performance Standards.

[FR Doc. 98–19216 Filed 7–17–98; 8:45 am]

BILLING CODE 4910–59–P

DEPARTMENT OF THE INTERIOR

Fish and Wildlife Service

50 CFR Part 17

RIN 1018–AC21

Endangered and Threatened Wildlife and Plants; Reopening of Comment Period on Proposed Endangered Status for Puccinellia Parishii (Parish's Alkali Grass)

AGENCY: Fish and Wildlife Service, Interior.

ACTION: Proposed rule; notice of reopening of public comment period.

SUMMARY: The Fish and Wildlife Service provides notice that the public comment period is reopened for the proposal to list *Puccinellia parishii* (Parish's alkali grass) as an endangered species pursuant to the Endangered Species Act of 1973, as amended. This small annual grass occurs near desert springs, seeps, and seasonally wet areas in Apache, Coconino, and Yavapai counties, Arizona; San Bernardino County, California; and Catron, Cibola, Grant, Hidalgo, McKinley, Sandoval, and San Juan counties, New Mexico.

DATES: This comment period closes on August 19, 1998.

ADDRESSES: Written comments and materials should be sent to the Field Supervisor, New Mexico Ecological Services Field Office, U.S. Fish and Wildlife Service, 2105 Osuna Road, NE., Albuquerque, New Mexico 87113. Comments and materials received will be available for public inspection during normal business hours, by appointment, at the above address.

FOR FURTHER INFORMATION CONTACT: Charlie McDonald at the above address or telephone (505) 346–2525.

SUPPLEMENTARY INFORMATION:

Background

Puccinellia parishii (Parish's alkali grass) was proposed for designation as an endangered species under the Endangered Species Act of 1973, as amended (Act) (16 U.S.C. 1531 *et seq.*) on March 28, 1994 (59 FR 14378). A 60-day public comment period was provided on the proposal. All interested parties were requested to submit factual reports or information that might contribute to the accuracy and effectiveness of any final action resulting from the proposal. The U.S. Fish and Wildlife Service (Service) received one request for a public hearing, and a notice announcing the public hearing and reopening the comment period was published in the **Federal Register** on August 30, 1994 (59 FR 44700). The public hearing was held on September 15, 1994, in Tuba City, Arizona.

Following the initial and reopened comment periods and public hearing, the Service received additional information on the distribution, abundance, habitat requirements, and threats for Parish's alkali grass. This new information is summarized in the following paragraphs.

Parish's alkali grass is now known from 29 sites as opposed to the 10 sites reported in the proposed rule. The known sites in New Mexico have increased to 16 from the 1 that was reported in the proposed rule. The new sites for New Mexico are in Catron (1), Cibola (1), Hidalgo (1), McKinley (6), Sandoval (4), and San Juan (2) counties. The 1 site reported in the proposed rule is in Grant County. The known sites in Arizona have increased to 11 from the 7 that were reported in the proposed rule. The new sites for Arizona are in Apache (3) and Yavapai (1) Counties. The 7 sites reported in the proposed rule are in Coconino County.

The known sites in California have decreased to 1 from the 2 that were reported in the proposed rule. Dr. Andrew Sanders of the University of California, Riverside identified the

plants from Edwards Air Force Base in Kern County as *Puccinellia simplex* rather than *P. parishii* (C. Rutherford, U.S. Fish and Wildlife Service, *in litt.* 1995). The other California site reported in the proposed rule is in San Bernardino County.

Some of the newly discovered sites extend the overall range of the species. In particular, discoveries in northwestern New Mexico extend the species' range about 300 km (200 mi) eastward from previously known sites in Arizona, and the discovery in west-central Arizona extends the species' range about 240 km (150 mi) southwestward in that state. Many of the new sites fill gaps in the known distribution making populations much less disjunct from one another than previously believed.

Some newly discovered sites for Parish's alkali grass indicate the species occupies a broader range of habitats than previously supposed. In addition to sites near desert springs and seeps, some newly discovered sites are in areas where the soils are subirrigated and wet only during the winter and spring months. These sites are generally not identified as springs on maps and are only noticeable because their greener vegetation contrasts with the surrounding brown vegetation during the spring months. One newly discovered site occurs at 2,240 m (7,350 ft) in elevation, which is 410 m (1,350 ft) higher than any of the sites in the proposed rule. These discoveries greatly increase the number of potential sites where Parish's alkali grass might be found.

Some of the newly discovered sites indicate Parish's alkali grass may withstand disturbance better than previously suspected. At several sites, cattle have closely cropped the vegetation and severely trampled the area. However, Parish's alkali grass persists at the sites. In one instance, a highway right-of-way fence protects part of the site from grazing. The protected area has a dense stand of sweet clover (*Melilotus sp.*) and no Parish's alkali grass, but the grass is abundant in the grazed area only a few meters away. Some disturbance likely reduces competition and creates microsites for seedling establishment for Parish's alkali grass, which is a short-statured annual plant.

No final decision has been made on whether to give Parish's alkali grass protection under the Act or to withdraw the listing proposal. In consideration of the length of time since the initial proposal and the new information about the species, the Service is reopening the comment period and seeking comments or suggestions from the public, other concerned governmental agencies, the scientific community, industry, or any other interested party concerning the proposed rule. The Service is seeking any other new information that may have been developed since the proposal was published, and that may expand the current knowledge of the status, distribution, or threats for Parish's alkali grass. The new comment period closes on August 19, 1998. Any comments should be sent to the Field Supervisor, New Mexico Ecological Services Field Office (see **ADDRESSES** section).

Reference Cited

Sivinski, R. 1995. Parish's alkali grass, progress report. New Mexico Forestry and Resources Conservation Division Section 6 Performance Report, Project E9, Segment 9. U.S. Fish and Wildlife Service, Albuquerque, New Mexico.

Author: The primary author of this document is Charlie McDonald (see **ADDRESSES** section).

Authority

The authority for this action is the Endangered Species Act (16 U.S.C. 1532 *et seq.*).

Dated: July 9, 1998.

Frank Shoemaker,

Regional Director, Region 2.

[FR Doc. 98–19208 Filed 7–17–98; 8:45 am]

BILLING CODE 4310–55–P

Notices

Federal Register
Vol. 63, No. 138
Monday, July 20, 1998

This section of the FEDERAL REGISTER contains documents other than rules or proposed rules that are applicable to the public. Notices of hearings and investigations, committee meetings, agency decisions and rulings, delegations of authority, filing of petitions and applications and agency statements of organization and functions are examples of documents appearing in this section.

DEPARTMENT OF AGRICULTURE

Animal and Plant Health Inspection Service

[Docket No. 98–067–1]

Monsanto Co.; Receipt of Petition for Determination of Nonregulated Status for Potato Lines Genetically Engineered for Insect and Virus Resistance

AGENCY: Animal and Plant Health Inspection Service, USDA.

ACTION: Notice.

SUMMARY: We are advising the public that the Animal and Plant Health Inspection Service has received a petition from Monsanto Company seeking a determination of nonregulated status for certain potato lines genetically engineered for resistance to the Colorado potato beetle and potato virus Y. The petition has been submitted in accordance with our regulations concerning the introduction of certain genetically engineered organisms and products. In accordance with those regulations, we are soliciting public comments on whether these potato lines present a plant pest risk.

DATES: Written comments must be received on or before September 18, 1998.

ADDRESSES: Please send an original and three copies of your comments to Docket No. 98–067–1, Regulatory Analysis and Development, PPD, APHIS, Suite 3C03, 4700 River Road Unit 118, Riverdale, MD 20737–1238. Please state that your comments refer to Docket No. 98–067–1. A copy of the petition and any comments received may be inspected at USDA, room 1141, South Building, 14th Street and Independence Avenue SW., Washington, DC, between 8 a.m. and 4:30 p.m., Monday through Friday, except holidays. Persons wishing access to that room to inspect the petition or comments are asked to call in advance of visiting at (202) 690–2817 to facilitate entry into the reading room.

FOR FURTHER INFORMATION CONTACT: Dr. David Heron, Biotechnology and Biological Analysis, PPQ, APHIS, Suite 5B05, 4700 River Road Unit 147, Riverdale, MD 20737–1236; (301) 734–5141. To obtain a copy of the petition, contact Ms. Kay Peterson at (301) 734–4885; e-mail: Kay.Peterson@usda.gov.

SUPPLEMENTARY INFORMATION: The regulations in 7 CFR part 340, ''Introduction of Organisms and Products Altered or Produced Through Genetic Engineering Which Are Plant Pests or Which There Is Reason to Believe Are Plant Pests,'' regulate, among other things, the introduction (importation, interstate movement, or release into the environment) of organisms and products altered or produced through genetic engineering that are plant pests or that there is reason to believe are plant pests. Such genetically engineered organisms and products are considered ''regulated articles.''

The regulations in § 340.6(a) provide that any person may submit a petition to the Animal and Plant Health Inspection Service (APHIS) seeking a determination that an article should not be regulated under 7 CFR part 340. Paragraphs (b) and (c) of § 340.6 describe the form that a petition for determination of nonregulated status must take and the information that must be included in the petition.

On December 5, 1997, APHIS received a petition (APHIS Petition No. 97–339–01p) from Monsanto Company (Monsanto) of St. Louis, MO, requesting a determination of nonregulated status under 7 CFR part 340 for certain NewLeaf® Y potato lines. The subject potato lines include one line of Russet Burbank (RBMT15–101), two lines of Shepody (SEMT15–02 and SEMT15–15), and one line of HiLite (HLMT15–46), which have been genetically engineered for resistance to the Colorado potato beetle (CPB) and potato virus Y (PVY). The Monsanto petition states that the subject potato lines should not be regulated by APHIS because they do not present a plant pest risk.

As described in the petition, all four of the subject NewLeaf® Y potato lines have been genetically engineered to contain the *cry3A* gene from *Bacillus thuringiensis* subsp. *tenebrionis* (*Btt*), which encodes a protein that is insecticidal to CPB, and the PVY coat protein gene (*PVYcp*), which imparts resistance to PVY. In addition to the *cry3A* gene and the PVYcp gene, these potato lines contain and express the *nptII* selectable marker gene, which is used in the initial stages of plant selection. While the two Shepody lines (SEMT15–02 and SEMT15–15) and the HiLite line (HLMT15–46) also contain the aad marker gene, tests indicate that this gene is not expressed in these potato plants. The subject potato lines were developed through the use of the *Agrobacterium tumefaciens* transformation system, and expression of the introduced genes is controlled in part by gene sequences derived from the plant pathogens *A. tumefaciens* and figwort mosaic virus.

The subject potato lines have been considered regulated articles under the regulations in 7 CFR part 340 because they contain gene sequences derived from plant pathogens. These potato lines have been evaluated in field trials conducted since 1995 under APHIS notifications. In the process of reviewing the notifications for field trials of the subject potato lines, APHIS determined that the trials, which were conducted under conditions of reproductive and physical containment or isolation, would not present a risk of plant pest introduction or dissemination.

In the Federal Plant Pest Act, as amended (7 U.S.C. 150aa *et seq.*), ''plant pest'' is defined as ''any living stage of: Any insects, mites, nematodes, slugs, snails, protozoa, or other invertebrate animals, bacteria, fungi, other parasitic plants or reproductive parts thereof, viruses, or any organisms similar to or allied with any of the foregoing, or any infectious substances, which can directly or indirectly injure or cause disease or damage in any plants or parts thereof, or any processed, manufactured or other products of plants.'' APHIS views this definition very broadly. The definition covers direct or indirect injury, disease, or damage not just to agricultural crops, but also to plants in general, for example, native species, as well as to organisms that may be beneficial to plants, for example, honeybees, rhizobia, etc.

The U.S. Environmental Protection Agency (EPA) is responsible for the

regulation of pesticides under the Federal Insecticide, Fungicide, and Rodenticide Act (FIFRA), as amended (7 U.S.C. 136 *et seq.*). FIFRA requires that all pesticides, including insecticides, be registered prior to distribution or sale, unless exempt by EPA regulation. In this regard, EPA has issued a registration to Monsanto for full commercialization of the plant pesticide *Btt* CRY3A delta endotoxin and the genetic material necessary for its production in potato. Residue tolerances for pesticides are established by EPA under the Federal Food, Drug and Cosmetic Act (FFDCA), as amended (21 U.S.C. 301 *et seq.*), and the Food and Drug Administration (FDA) enforces tolerances set by EPA under the FFDCA. In addition to the registration, EPA has issued exemptions from the requirement of a tolerance for residues of the subject plant pesticide CRY3A in potatoes, for the NPTII protein as a plant pesticide inert ingredient in all plants, and for the PVY coat protein in or on all plants and raw agricultural commodities.

FDA published a statement of policy on foods derived from new plant varieties in the **Federal Register** on May 29, 1992 (57 FR 22984–23005). The FDA statement of policy includes a discussion of FDA's authority for ensuring food safety under the FFDCA, and provides guidance to industry on the scientific considerations associated with the development of foods derived from new plant varieties, including those plants developed through the techniques of genetic engineering. Monsanto has completed consultation with FDA on the subject potato lines.

In accordance with § 340.6(d) of the regulations, we are publishing this notice to inform the public that APHIS will accept written comments regarding the Petition for Determination of Nonregulated Status from any interested person for a period of 60 days from the date of this notice. The petition and any comments received are available for public review, and copies of the petition may be ordered (see the **ADDRESSES** section of this notice).

After the comment period closes, APHIS will review the data submitted by the petitioner, all written comments received during the comment period, and any other relevant information. Based on the available information, APHIS will furnish a response to the petitioner, either approving the petition in whole or in part, or denying the petition. APHIS will then publish a notice in the **Federal Register** announcing the regulatory status of Monsanto's NewLeaf® Y potato lines RBMT15–101, SEMT15–02, SEMT15–15, and HLMT15–46 and the availability of APHIS' written decision.

Authority: 7 U.S.C. 150aa–150jj, 151–167, and 1622n; 31 U.S.C. 9701; 7 CFR 2.22, 2.80, and 371.2(c).

Done in Washington, DC, this 14th day of July, 1998.

Craig A. Reed,

Acting Administrator, Animal and Plant Health Inspection Service.

[FR Doc. 98–19228 Filed 7–17–98; 8:45 am]

BILLING CODE 3410–34–P

DEPARTMENT OF AGRICULTURE

Food and Nutrition Service

Agency Information Collection Activities: Proposed Collection; Comment Request—Child Nutrition Database

AGENCY: Food and Nutrition Service, USDA.

ACTION: Notice.

SUMMARY: In accordance with the Paperwork Reduction Act of 1995, this notice announces the intention of the Food and Nutrition Service (FNS) to request voluntary submission of data including nutrient data from the food service industry to expand the Child Nutrition Database in support of the School Meal Initiatives for Healthy Children.

DATES: Comments on this notice must be received by September 18, 1998.

ADDRESSES: Comments are invited on: (a) Whether the proposed collection of information is necessary for the proper performance of the functions of the agency, including whether the information will have practical utility; (b) the accuracy of the agency's estimate of the burden of the proposed collection of information including the validity of the methodology and assumptions used; (c) ways to enhance the quality, utility, and clarity of the information to be collected; and (d) ways to minimize the burden of the collection of information on those who are to respond, including through the use of appropriate automated, electronic, mechanical, or other technological collection techniques or other forms of information technology. All responses to this notice will be summarized and included in the request for OMB approval and will become a matter of public record. Comments may be sent to: Marion Hinners, Team Leader, Food Science and Nutrition Section, Technical Assistance Branch, Nutrition and Technical Services Division, Food and Consumer Service, United States Department of Agriculture, 3101 Park Center Drive, Alexandria, VA 22302.

FOR FURTHER INFORMATION CONTACT: Requests for additional information or copies of the information collection instruments and instruction should be directed to Marion Hinners at (703) 305–2556.

SUPPLEMENTARY INFORMATION:

Title: Data Collection to Expand the Child Nutrition Database.

OMB Number: Not yet assigned. (Previously cleared under ARS 0518–0021).

Expiration Date: Not available.

Type of Request: Reinstatement, with change, of a previously approved collection for which approval has expired.

Abstract: The development of the Child Nutrition (CN) Database, previously known as the National Nutrient Database for Child Nutrition Programs (NNDCNP), is regulated by the United States Department of Agriculture (USDA) School Meal Initiatives for Healthy Children. This database is designed to be incorporated in USDA approved nutrition analysis software programs and provide an accurate source of nutrient data, which allows schools to analyze the meals served to children and measure the compliance of the menus to established nutrition goals and standards specified in 7 CFR 210.10 for the National School Lunch Program and 7 CFR 220.8 for the School Breakfast Program. The information collection for the CN Database was previously conducted by USDA's Agricultural Research Service and will now be conducted using an outside contractor. The CN Database needs to be updated with an extensive database of brand name or manufactured foods commonly used in school food service. The Food and Nutrition Service is soliciting a contractor to collect this data from the food industry to expand the CN Database. The submission of data from the food industry will be strictly voluntary, and based on analytical, calculated, or nutrition facts label sources.

Estimate of Burden: Public reporting burden for this collection of information is estimated to average 2.0 hours per response.

Respondents: The respondents are the manufacturers of food products for school food service.

Estimated Number of Respondents: 100.

Estimated Number of Responses per Respondent: 30.

Estimated Total Annual Burden on Respondents: 6,000 hours.

Dated: July 9, 1998.

George A. Braley,

Acting Administrator, Food and Nutrition Service.

[FR Doc. 98–19246 Filed 7–17–98; 8:45 am]

BILLING CODE 3410–30–P

DEPARTMENT OF AGRICULTURE

Forest Service

Information Collection for the Wildland-Urban Interface Series

AGENCY: Forest Service, USDA.

ACTION: Notice of information collection; request for comments.

SUMMARY: In accordance with the Paperwork Reduction Act of 1995, the Forest Service announces its intent to establish a new information collection. The new collection is necessary to help the Forest Service gain a better understanding of how residents living in urban environments perceive the agency's management of National Forest System lands, how the agency can better meet the recreational needs of residents of all ages who live in urban environments close to National Forest System lands, and how the agency can more effectively disseminate information to urban residents about National Forest System land recreational opportunities. Respondents will be urban residents who live close to and visit National Forest System lands, as well as urban residents who do not visit.

DATES: Comments must be received in writing on or before September 18, 1998.

ADDRESSES: All comments should be addressed to: Forest Service, USDA, The Wildland-Urban Interface Project, Pacific Southwest Forest Experiment Station, 4955 Canyon Crest Dr., Riverside, CA 92507.

FOR FURTHER INFORMATION CONTACT: Dr. Patricia Winter, Pacific Southwest Forest Experiment Station, at (909) 680–1557.

SUPPLEMENTARY INFORMATION:

Description of Information Collection

Title: The Wildland-Urban Interface Series.

OMB Number: New.

Expiration Date of Approval: New.

Type of Request: The following describes a new collection requirement and has not received approval by the Office of Management and Budget.

Abstract: Forest Service personnel will analyze the collected data to gain a better understanding of how residents, living in an urban environment close to National Forest System lands, get or receive information about recreational opportunities on these lands; how residents in urban environments perceive the Forest Service's management of the lands; how much residents in urban environments know about and what they think about the agency's policies and regulations governing the lands; and which recreational activities urban residents prefer.

Forest Service research scientists and technicians will collect the data.

The collected data will include the respondent's gender, age, education, ethnic or racial group affiliation, zip code, primary language, when they last visited an outdoor public recreational area, how many times a year they visit, if they have plans to visit in the near future, the types of activities they participate in while visiting the recreational sites, how they learned about the recreational area, if the area is relaxing or reminds them of other favorite places, if they think the area is accessible for the disabled, and the amenities they prefer, such as informational signs, well-maintained trails, and natural vegetation. Respondents, who have not visited Forest Service managed recreational sites, will be asked their reason for not visiting.

This information collection will include mail-in questionnaires, telephone interviews, and face-to-face interviews. Participation will be voluntary.

Data gathered in this information collection is not available from other sources.

Estimate of Burden: 15 minutes.

Type of Respondents: Individuals and groups visiting National Forest System lands, urban residents living in close proximity to the lands, and visitors to outdoor public recreational areas.

Estimated Number of Respondents: 3,000.

Estimated Number of Responses per Respondent: 1.

Estimated Total Annual Burden on Respondents: 750 hours.

Comments Are Invited

The agency invites comments on the following: (a) Whether the proposed collection of information is necessary for the proper performance of the functions of the agency, including whether the information shall have practical utility; (b) the accuracy of the agency's estimate of the burden of the proposed collection of information, including the validity of the methodology and assumptions used; (c) ways to enhance the quality, utility, and clarity of the information to be collected; and (d) ways to minimize the burden of the collection of information on respondents, including the use of automated, electronic, mechanical, or other technological collection techniques or other forms of information technology.

Use of Comments

All comments received in response to this notice, including the name and address when provided, will be summarized and included in the request for Office of Management and Budget approval. All comments will also become a matter of public record.

Dated: July 14, 1998.

Robert Lewis, Jr.,

Acting Associate Chief.

[FR Doc. 98–19215 Filed 7–17–98; 8:45 am]

BILLING CODE 3410–11–P

DEPARTMENT OF COMMERCE

Submission for OMB Review; Comment Request

DOC has submitted to the Office of Management and Budget (OMB) for clearance the following proposal for collection of information under the provisions of the Paperwork Reduction Act (44 U.S.C. chapter 35).

Agency: Bureau of the Census.

Title: Data User Evaluation Surveys.

Form Number(s): Various.

Agency Approval Number: 0607–0760.

Type of Request: Extension of a currently approved collection.

Burden: 3,750.

Number of Respondents: 7,500.

Avg. Hours Per Response: 30 minutes.

Needs and Uses: The Census Bureau is requesting an extension of the generic clearance to conduct customer satisfaction research surveys which may be in the form of mailed or electronic questionnaires and/or focus groups or personal interviews.

The Census Bureau has ranked a customer focused environment as one of its most important strategic planning objectives. The Bureau routinely needs to collect and analyze customer feedback about its products and services to better align them to its customers' needs and preferences. Several products and distribution channels have been designed/redesigned based on feedback from its various customer satisfaction research efforts.

Each research design is reviewed for content, utility, and user-friendliness by a variety of appropriate staff (including research design and subject-matter

specialists). The concept and design are tested by internal staff and a select sample of respondents to confirm its appropriateness, user-friendliness, and to estimate burden (including hours and cost) of the proposed collection of information. Collection techniques are discussed and included in the research concept design discussions to define the most time-, cost-efficient and accurate collection media.

The clearance operates in the following manner: A block of hours is reserved at the beginning of each year, and the particular activities that will be conducted under the clearance are not specified in advance. The Census Bureau provides information to OMB about the specific activities on a flow basis throughout the year. OMB is notified of each activity in a letter that gives specific details about the activity, rather than by means of individual clearance packages. At the end of each year, a report is submitted to OMB that summarizes the number of hours used as well as the nature and results of the activities completed under the clearance.

Affected Public: Individuals or households, businesses or other for-profit, not-for-profit institutions, Federal Government, State, Local or Tribal Government.

Frequency: On occasion.

Respondent's Obligation: Voluntary.

Legal Authority: Executive Order 12862 (Setting Customer Service Standards).

OMB Desk Officer: Nancy Kirkendall, (202) 395–7313.

Copies of the above information collection proposal can be obtained by calling or writing Linda Engelmeier, DOC Forms Clearance Officer, (202) 482–3272, Department of Commerce, room 5327, 14th and Constitution Avenue, NW, Washington, DC 20230.

Written comments and recommendations for the proposed information collection should be sent within 30 days of publication of this notice to Nancy Kirkendall, OMB Desk Officer, room 10201, New Executive Office Building, Washington, DC 20503.

Dated: July 14, 1998.

Linda Engelmeier,

Departmental Forms Clearance Officer, Office of Management and Organization.

[FR Doc. 98–19205 Filed 7–17–98; 8:45 am]

BILLING CODE 3510–07–P

DEPARTMENT OF COMMERCE

National Oceanic and Atmospheric Administration

[I.D. 071398B]

Highly Migratory Species and Billfish Advisory Panels; Public Meeting

AGENCY: National Marine Fisheries Service (NMFS), National Oceanic and Atmospheric Administration (NOAA), Commerce.

ACTION: Notice of public meeting.

SUMMARY: The Atlantic Highly Migratory Species (HMS) and Billfish Advisory Panels (APs) will hold a joint meeting to discuss bycatch reduction issues in HMS fisheries, followed by a meeting of the HMS AP to discuss shark management measures for inclusion in the draft HMS fishery management plan (FMP).

DATES: The joint HMS/Billfish Advisory Panel meeting will be held Monday, July 27, 1998, from 8:00 a.m. to 5:00 p.m. The HMS AP meeting will be held Monday, July 27, 1998, from 7:00 to 9:00 p.m. and Tuesday, July 28, 1998, from 8:30 a.m. to 4:30 p.m. at the meeting location. There will be a public comment period on issues that the APs are discussing on Monday, July 27, 1998, from 6:00 to 7:00 p.m.

ADDRESSES: The APs will meet at the Ramada Plaza Hotel, 901 N. Fairfax Street, Alexandria, Virginia. Written comments should be submitted to, and informational materials related to the AP meeting are available from, Liz Lauck, Highly Migratory Species Management Division, 1315 East-West Highway, Silver Spring, Maryland 20910.

FOR FURTHER INFORMATION CONTACT: Liz Lauck or Pat Wilbert, telephone: (301) 713–2347, fax: (301) 713–1917.

SUPPLEMENTARY INFORMATION: The HMS and Billfish APs were established under the authority of the Magnuson-Stevens Fishery Conservation and Management Act, 16 U.S.C. 1901 *et seq*. The APs will assist the Secretary of Commerce in collecting and evaluating information relevant to the development of an FMP for Atlantic tunas, swordfish, and sharks, and an amendment to the Billfish FMP. All AP meetings are open to the public and will be attended by members of the AP, including appointed members, representatives of the five fishery Management Councils that work with Atlantic HMS, and the Chair, or his representative, of the U.S. Advisory Committee to the International Commission for the Conservation of Atlantic Tunas. A public comment period is scheduled for Monday, July 27, 1998, from 6:00 to 7:00 p.m. at the meeting location. Comments are solicited on bycatch reduction measures and shark management measures that should be considered for inclusion in the draft FMP documents. See **ADDRESSES** to request informational materials related to the AP discussion or to submit public comments on bycatch reduction or shark management measures. Agenda items for the joint HMS/Billfish AP meeting to discuss bycath management include discussion of:

1. Consideration of protected resource issues in bycatch management for HMS fisheries;

2. Gear modifications that could be considered to reduce bycatch in HMS fisheries; and

3. The possible use of time and area closures to reduce bycatch in HMS fisheries.

Agenda items for the HMS AP meeting to discuss shark management include discussion of:

1. A review of preliminary or final results from the June 1998 Shark Evaluation Workshop;

2. Rebuilding scenarios for the overfished large coastal shark management sub-unit;

3. Issues related to operation of the commercial and recreational shark fisheries, which could include permitting and reporting, mitigating derby conditions in the fishery, and enforcement concerns;

4. Research and management needs for the small coastal and pelagic shark management sub-units; and

5. Current international management activities related to Atlantic sharks.

Special Accommodations

This meeting is physically accessible to people with disabilities. Requests for sign language interpretation or other auxiliary aids should be directed to Pat Wilbert, 1315 East-West Highway, Silver Spring, MD 20910, phone (301) 713–2347; fax: (301) 713–1917, at least 7 days prior to the meeting date.

Dated: July 14, 1998.

Bruce C. Morehead,

Acting Director, Office of Sustainable Fisheries, National Marine Fisheries Service.

[FR Doc. 98–19159 Filed 7–14–98; 4:04 pm]

BILLING CODE 3510–22–F

DEPARTMENT OF COMMERCE

Patent and Trademark Office

Recording Assignments (Formerly Called Changes in Patent and Trademark Practices)

ACTION: Proposed collection; comment request.

SUMMARY: The Department of Commerce (DoC), as part of its continuing effort to reduce paperwork and respondent burden, invites the general public and other Federal agencies to comment on the continuing information collection, as required by the Paperwork Reduction Act of 1995, Public Law 104–13 (44 U.S.C. 3506(c)(2)(A)).

DATES: Written comments must be submitted on or before September 18, 1998.

ADDRESSES: Direct all written comments to Linda Engelmeier, Departmental Forms Clearance Officer, Department of Commerce, Room 5327, 14th and Constitution Avenue, NW, Washington, DC 20230.

FOR FURTHER INFORMATION CONTACT: Requests for additional information should be directed to the attention of Audrey Britt, Manager of the Assignment Division, by telephone at (703) 308–9706 or by facsimile transmission to (703) 308–7124.

SUPPLEMENTARY INFORMATION:

I. Abstract

As part of the responsibilities outlined by 35 U.S.C. 261 and 262 for patents, and 15 U.S.C. 1057 and 1060 of the Trademark Act of 1946 for trademarks, the Patent and Trademark Office (PTO) records a variety of documents submitted to them by the public, corporations, other federal agencies, and Government-owned or Government-controlled corporations. These individuals, federal agencies, and corporations can submit various documents which establish their rights, and/or titles for patents and trademarks to the PTO for recording. This officially and publicly establishes their rights and titles. These documents typically include items such as transfers of properties (i.e., patents and trademarks), liens, licenses, assignments of interest, security interests, mergers, and explanations of transactions or other documents that record the transfer of ownership from one party to another. The PTO can also record assignments for applications, patents, and trademarks. By submitting these various items, the individual, federal agency or corporation can establish their ownership of an item.

Once the document has been recorded, it is available to the public. All recorded documents, except for those under secrecy orders or those in which the federal government has a documented interest, can be viewed by the public. The public uses these documents to conduct ownership and chain-of-title searches. The public can view these records either at the PTO or the National Archives and Records Administration, depending on when they were recorded.

To make the recording process faster, more efficient, and more accurate, the PTO developed an automated system called the Patent and Trademark Assignment System or PTAS. This system helps automate the movement of the various documents to be recorded throughout the PTO Assignment Division.

In order to accurately record a document and to take advantage of the speed and efficiency of the PTAS, the PTO developed cover sheets to submit with the document to be recorded. These cover sheets capture all of the necessary data needed to accurately record the various documents. These cover sheets were also designed so that they can be easily scanned into the PTAS. At this time, only the cover sheets can be scanned into the PTAS. The PTO does not currently use any automated, electronic, mechanical, or any other technological collection methods to collect the information for patent and application assignments.

II. Method of Collection

By mail, facsimile transmission, or hand carried to the Patent and Trademark Office.

III. Data

OMB Number: 0651–0027.

Type of Review: Renewal without change.

Affected Public: Individuals or households, businesses or other for-profit, not-for-profit institutions, farms, state, local or tribal governments, and the Federal Government.

Estimated Number of Respondents: 320,000 responses per year.

Estimated Time Per Response: It is estimated to take the public six minutes to complete an assignment of an application (Form PTO/SB/15) and an assignment of a patent (Form PTO/SB/41). It is estimated to take a half hour to complete a trademark recordation form cover sheet or a patent recordation form cover sheet.

Estimated Total Annual Respondent Burden Hours: 100,000 hours per year.

Estimated Total Annual Respondent Cost Burden: $17,500,000 per year.

Title of form or function	Form number(s)	Estimated time for response	Estimated annual burden hours	Estimated annual responses
Assignment of Application	PTO/SB/15	6 mins	7,500	7,500
Assignment of Patent	PTO/SB/41	6 mins	7,500	75,000
Trademark Recordation Form Cover Sheet	Form PTO–1618A, B, & C	30 mins	42,500	85,000
Patent Recordation Form Cover Sheet	Form PTO–1619A, B, & C	30 mins	42,500	85,000
Totals			100,000	320,000

IV. Request for Comments

Comments are invited on: (a) Whether the proposed collection of information is necessary for the proper performance of the functions of the agency, including whether the information shall have practical utility; (b) the accuracy of the agency's estimate of the burden (including hours and cost) of the proposed collection of information; (c) ways to enhance the quality, utility, and clarity of the information to be collected; and (d) ways to minimize the burden of the collection of information on respondents, including through the use of automated collection techniques or other forms of information technology.

Comments submitted in response to this notice will be summarized or included in the request for OMB approval of this information collection; they will also become a matter of public record.

Dated: July 14, 1998.

Linda Engelmeier,

Departmental Forms Clearance Officer, Office of Management and Organization.

[FR Doc. 98–19204 Filed 7–17–98; 8:45 am]

BILLING CODE 3510–16–P

COMMITTEE FOR THE IMPLEMENTATION OF TEXTILE AGREEMENTS

Adjustment of Import Limits for Certain Cotton, Man-Made Fiber, Silk Blend and Other Vegetable Fiber Textiles and Textile Products Produced or Manufactured in Oman

July 14, 1998.

AGENCY: Committee for the Implementation of Textile Agreements (CITA).

ACTION: Issuing a directive to the Commissioner of Customs adjusting limits.

EFFECTIVE DATE: July 20, 1998.

FOR FURTHER INFORMATION CONTACT: Janet Heinzen, International Trade Specialist, Office of Textiles and Apparel, U.S. Department of Commerce, (202) 482–4212. For information on the quota status of these limits, refer to the Quota Status Reports posted on the bulletin boards of each Customs port or call (202) 927–5850. For information on embargoes and quota re-openings, call (202) 482–3715.

SUPPLEMENTARY INFORMATION:

Authority: Section 204 of the Agricultural Act of 1956, as amended (7 U.S.C. 1854); Executive Order 11651 of March 3, 1972, as amended.

The current limits for certain categories are being increased, variously, for carryover and carryforward.

A description of the textile and apparel categories in terms of HTS numbers is available in the CORRELATION: Textile and Apparel Categories with the Harmonized Tariff Schedule of the United States (see **Federal Register** notice 62 FR 66057, published on December 17, 1997). Also see 62 FR 67627, published on December 29, 1997.

Troy H. Cribb,

Chairman, Committee for the Implementation of Textile Agreements.

Committee for the Implementation of Textile Agreements

July 14, 1998.

Commissioner of Customs,
Department of the Treasury, Washington, DC 20229.

Dear Commissioner: This directive amends, but does not cancel, the directive issued to you on December 19, 1997, by the Chairman, Committee for the Implementation of Textile Agreements. That directive concerns imports of certain cotton, man-made fiber, silk blend and other vegetable fiber textiles and textile products, produced or manufactured in Oman and exported during the twelve-month period which began on January 1, 1998 and extends through December 31, 1998.

Effective on July 20, 1998, you are directed to increase the limits for the following categories, as provided for under the terms of the bilateral agreement between the Governments of the United States and the Sultanate of Oman, effected by exchange of notes dated December 13, 1993 and January 15, 1994, as amended and extended:

Category	Adjusted twelve-month limit [1]
334/634	166,500 dozen.
335/635	280,269 dozen.
338/339	577,388 dozen.
340/640	280,269 dozen.
341/641	210,202 dozen.
347/348	956,831 dozen.
647/648/847	429,659 dozen.

[1] The limits have not been adjusted to account for any imports exported after December 31, 1997.

The Committee for the Implementation of Textile Agreements has determined that these actions fall within the foreign affairs exception to the rulemaking provisions of 5 U.S.C. 553(a)(1).

Sincerely,

Troy H. Cribb,

Chairman, Committee for the Implementation of Textile Agreements.

[FR Doc.98–19219 Filed 7–17–98; 8:45 am]

BILLING CODE 3510–DR–F

COMMITTEE FOR THE IMPLEMENTATION OF TEXTILE AGREEMENTS

Adjustment of Import Limits for Certain Cotton, Wool, Man-Made Fiber, Silk Blend and Other Vegetable Fiber Textiles and Textile Products Produced or Manufactured in Sri Lanka

July 14, 1998.

AGENCY: Committee for the Implementation of Textile Agreements (CITA).

ACTION: Issuing a directive to the Commissioner of Customs adjusting limits.

EFFECTIVE DATE: July 20, 1998.

FOR FURTHER INFORMATION CONTACT: Helen L. LeGrande, International Trade Specialist, Office of Textiles and Apparel, U.S. Department of Commerce, (202) 482–4212. For information on the quota status of these limits, refer to the Quota Status Reports posted on the bulletin boards of each Customs port or call (202) 927–5850. For information on embargoes and quota re-openings, call (202) 482–3715.

SUPPLEMENTARY INFORMATION:

Authority: Section 204 of the Agricultural Act of 1956, as amended (7 U.S.C. 1854); Executive Order 11651 of March 3, 1972, as amended.

The current limits for certain categories are being adjusted, variously, for swing, special shift, carryover, carryforward, special carryforward, and allowance for handloomed products.

A description of the textile and apparel categories in terms of HTS numbers is available in the CORRELATION: Textile and Apparel Categories with the Harmonized Tariff Schedule of the United States (see **Federal Register** notice 62 FR 66057, published on December 17, 1997). Also see 62 FR 67837, published on December 30, 1997.

Troy H. Cribb,

Chairman, Committee for the Implementation of Textile Agreements.

Committee for the Implementation of Textile Agreements

July 14, 1998.

Commissioner of Customs,
Department of the Treasury, Washington, DC 20229.

Dear Commissioner: This directive amends, but does not cancel, the directive issued to you on December 22, 1997, by the Chairman, Committee for the Implementation of Textile Agreements. That directive concerns imports of certain cotton, wool, man-made fiber, silk blend and other vegetable fiber textiles and textile products, produced or manufactured in Sri Lanka and exported during the twelve-month period which began on January 1, 1998 and extends through December 31, 1998.

Effective on July 20, 1998, you are directed to adjust the limits for the following categories, as provided for under the Uruguay Round Agreement on Textiles and Clothing:

Category	Adjusted twelve-month limit [1]
237	378,494 dozen.
314	5,410,964 square meters.
331/631	3,712,107 dozen pairs.
333/633	13,359 dozen.
334/634	904,824 dozen.
335/835	204,058 dozen.
336/636/836	588,478 dozen.
338/339	1,597,383 dozen.
340/640	1,569,583 dozen.
341/641	2,220,363 dozen of which not more than 1,554,376 dozen shall be in Category 341 and not more than 1,554,376 dozen shall be in Category 641.
342/642/842	727,287 dozen.
345/845	98,476 dozen.

Category	Adjusted twelve-month limit [1]
347/348/847	1,800,291 dozen.
350/650	123,097 dozen.
351/651	438,549 dozen.
352/652	1,412,105 dozen.
359–C/659–C [2]	1,181,402 kilograms.
360	1,771,732 numbers.
363	13,515,567 numbers.
369–D [3]	650,016 kilograms.
369–S [4]	1,005,426 kilograms.
434	8,160 dozen.
435	17,486 dozen.
440	11,657 dozen.
611	6,820,144 square meters.
635	491,479 dozen.
638/639/838	1,053,988 dozen.
644	361,695 numbers.
645/646	118,096 dozen.
647/648	1,191,177 dozen.
840	128,067 dozen.

[1] The limits have not been adjusted to account for any imports exported after December 31, 1997.

[2] Category 359–C: only HTS numbers 6103.42.2025, 6103.49.8034, 6104.62.1020, 6104.69.8010, 6114.20.0048, 6114.20.0052, 6203.42.2010, 6203.42.2090, 6204.62.2010, 6211.32.0010, 6211.32.0025, and 6211.42.0010; Category 659–C: only HTS numbers 6103.23.0055, 6103.43.2020, 6103.43.2025, 6103.49.2000, 6103.49.8038, 6104.63.1020, 6104.63.1030, 6104.69.1000, 6104.69.8014, 6114.30.3044, 6114.30.3054, 6203.43.2010, 6203.43.2090, 6203.49.1010, 6203.49.1090, 6204.63.1510, 6204.69.1010, 6210.10.9010, 6211.33.0010, 6211.33.0017 and 6211.43.0010.

[3] Category 369–D: only HTS numbers 6302.60.0010, 6302.91.0005 and 6302.91.0045.

[4] Category 369–S: only HTS number 6307.10.2005.

The Committee for the Implementation of Textile Agreements has determined that these actions fall within the foreign affairs exception of the rulemaking provisions of 5 U.S.C. 553(a)(1).

Sincerely,

Troy H. Cribb,

Chairman, Committee for the Implementation of Textile Agreements.

[FR Doc. 98–19220 Filed 7–17–98; 8:45 am]

BILLING CODE 3510–DR–F

CORPORATION FOR NATIONAL AND COMMUNITY SERVICE

Notice of Availability of Funds To Support AmeriCorps Promise Fellowships in Support of the Goals of the Presidents' Summit

AGENCY: Corporation for National and Community Service.

ACTION: Notice of availability of funds.

SUMMARY: The Corporation for National and Community Service (the Corporation) will use approximately $5 million to award grants to state commissions on national and community service (State Commissions), Indian tribes, U.S. territories and national nonprofit organizations to sponsor AmeriCorps Promise Fellows who will help implement programs in support of the five goals for children and youth set at the Presidents' Summit for America's Future. These grants, in the aggregate, will support between 500–750 Fellows, with the number dependent upon the amount of national, state and local resources committed to this effort. These Fellows will spend one year serving with organizations that are committed to helping to meet one or more of the five goals of the Presidents' Summit. Each Fellow who successfully completes a term of service will receive the $4,725 AmeriCorps education award.

Last year at Philadelphia, President Clinton, former Presidents Bush, Carter, and Ford, Mrs. Nancy Reagan, and General Colin Powell, with the endorsement of many governors, mayors, and leaders of the independent sector, declared: ''We have a special obligation to America's children to see that all young Americans have:

1. Caring adults in their lives, as parents, mentors, tutors, coaches;
2. Safe places with structured activities in which to learn and grow;
3. A healthy start and healthy future;
4. An effective education that equips them with marketable skills; and
5. An opportunity to give back to their communities through their own service.

These five goals are now the five fundamental resources sought by America's Promise '' The Alliance for Youth, the organization following up on the goals of the Presidents' Summit.

As a major partner in this effort, the Corporation devotes a substantial part of its activities to help meet these goals, including the work of AmeriCorps, Learn and Serve America, and the National Senior Service Corps. This new Fellowship program will provide States and local communities with additional and unique support to help carry out their plans to provide America's children with these five fundamental resources.

DATES: All sponsor proposals must be submitted by September 10, 1998. The Corporation anticipates announcing selections under this announcement no later than October 31, 1998. The project period is negotiable, but will generally end no later than December 31, 1999.

ADDRESSES: Proposals to sponsor one or more Fellows must be submitted to the Corporation at the following address: Corporation for National Service, Attn: Gary Kowalczyk, 1201 New York Avenue NW, Washington, D.C. 20525.

FOR FURTHER INFORMATION CONTACT: For further information, or to obtain a sponsor application, contact the Corporation for National Service, Jeffrey Gale at (202) 606–5000, ext. 280 or Nicole Karlson at 215–597–2828. T.D.D. (202) 565–2799. This notice may be requested in an alternative format for the visually impaired.

SUPPLEMENTARY INFORMATION:

Background

The Corporation is a federal government corporation that encourages Americans of all ages and backgrounds to engage in community-based service. This service addresses the nation's educational, public safety, environmental and other human needs to achieve direct and demonstrable results. In doing so, the Corporation fosters civic responsibility, strengthens the ties that bind us together as a people, and provides educational opportunity for those who make a substantial commitment to service. For more information about the Corporation and the activities that it supports, go to http://www.nationalservice.org.

Pursuant to the National and Community Service Act of 1990, as amended (the Act), the Corporation may support ''innovative and model programs'' and may award national service fellowships. 42 U.S.C. 12653b. In addition, the Corporation may approve the provision of education awards to individuals who successfully complete a term of service in ''national service positions as the Corporation determines to be appropriate''. 42 U.S.C. 12573(7).

Through this notice, the Corporation invites grant proposals from eligible entities who wish to sponsor one or more AmeriCorps Promise Fellows.

Eligible Sponsors

The following entities are eligible to apply to become a sponsor: Governor-appointed state commissions on national and community service (State Commissions), Indian tribes, U.S. territories, and national nonprofit organizations currently operating an AmeriCorps program or proposing to sponsor activities meeting the goals of the Presidents' Summit in more than one state.

The Corporation anticipates supporting at least five Fellows in every state. If the grantmaking process results in a state not receiving AmeriCorps Promise Fellows the Corporation may set aside sufficient funds to ensure that every State has at least one Fellow. In such instances, the Corporation may approve, in coordination with a State Commission, a national or local

nonprofit organization to sponsor one or more Fellows through a process other than the one described in this Notice.

Substance of the Fellowship Program

An AmeriCorps Promise Fellowship provides the Fellow with an opportunity to make a unique contribution to organizations helping to meet one or more of the five fundamental needs declared at the Presidents' Summit and being advanced by America's Promise—The Alliance for Youth; national, state, and local nonprofit organizations; and the national service network. For more information about the five goals of the Presidents' Summit, go to http://www.americaspromise.org.

Although AmeriCorps Promise Fellows may be placed by a sponsor at a host organization that focuses its resources on only one of the goals of the Presidents' Summit, the host organization must be part of a larger effort (e.g., Community of Promise) that supports the delivery of all of the five fundamental resources to children and young people.

Eligible sponsor applicants have considerable freedom to identify the structure of their Fellowship program and the projects or activities that AmeriCorps Promise Fellows will pursue. The most important considerations in establishing a program are that the prospective Fellows help meet the goals of the Presidents' Summit and that they have the ability to produce a defined outcome. The following are examples of specific tasks that Fellows may perform; these tasks are included here for illustrative purposes:

- A full-time coordinator for a Community of Promise campaign providing a targeted number of young people with all or several of the America's Promise fundamental resources.
- A full-time coordinator of individual or multiple sites, such as schools and housing complexes, that provide access to multiple or all five fundamental resources.
- An entrepreneur initiating a program to provide multiple resources to targeted young people, for example, adding a service component and access to dental care to an existing after-school tutoring program.
- A recruiter of Communities of Promise.
- A recruiter and manager of volunteers in a local or regional effort providing all or multiple resources to a number of young people.

The following are examples of organizational activities that could be supported by Fellows as part of an effort to provide the five fundamental resources to children and youth. They are included here for illustrative purposes only:

- Expansion of Volunteer Center activities to promote the goals of the Presidents' Summit.
- State Education Agency efforts to stimulate service-learning opportunities by K–12 students.
- Community and school efforts to provide after-school programs in safe places.
- Youth leadership to stimulate service and service-learning by inner-city youth.
- Support to community volunteer and Federal-Work-Study efforts to promote literacy.
- Immunization efforts aimed at young children and their families.
- Efforts to secure access to health care providers and facilities.
- Mentoring programs linking adults with youth in need of additional support.
- Recruitment and placement of Federal-Work-Study students for community service.
- New models for involving professions in organizing to meet the goals of the Presidents' Summit, e.g., health care professionals, librarians, museum administrators, and teachers.
- Efforts to stimulate service by diverse groups to meet the Presidents' Summit's goals, including diverse ethnic, religious, racial, and cultural groups.

A sponsor may determine its own process to identify projects and programs in which AmeriCorps Promise Fellows will serve, and may either participate directly in the recruitment and selection of individual AmeriCorps Promise Fellows or delegate that responsibility to local programs or another entity (e.g., a university). One model a sponsor may consider is first to identify organizations where Fellows may serve, establish that the activities of those organizations meet the criteria for the AmeriCorps Promise Fellowship program, and then simply publicize a list of eligible host organizations for individuals interested in pursuing a Fellowship.

Fellows will be viewed as leaders in the efforts to implement the goals of the Presidents' Summit, and as a group will have an identity tied to this overall effort, including opportunities to meet and to assess the overall impact of their efforts. Although no particular academic credentials or work experience are required to become a Fellow, confidence in the ability of applicants to produce outcomes in support of the goals of the Presidents' Summit, such as the implementation of commitments made at the Presidents' Summit and follow-up state and local summits, is the central criterion for selection. This is evidenced by: strong academic credentials; substantial and successful work experience in a field related to the organization's activities; and experience performing significant service related activities, particularly various national service leaders' programs, including AmeriCorps leaders, AmeriCorps*VISTA leaders, AmeriCorps*National Civilian Community Corps leaders, and leadership activities in programs sponsored by Learn and Serve America and the National Senior Service Corps. Each sponsor may adapt the above concepts to meet its specific needs.

An AmeriCorps Promise Fellow must: (1) Be at least 17 years of age; (2) be a U.S. citizen, national, or lawful permanent resident alien; and (3) have a high school diploma or GED. Individuals who have already served in two approved national service positions (a position for which an education award is provided) are, by statute, not eligible for a third education award.

Fellowships are expected to be for at least 10 months and must be completed within 12 months. To qualify for an education award of $4,725, a Fellow must serve on a full-time basis, perform at least 1,700 hours of service, and successfully complete the Fellowship.

Fellows who serve for twelve months receive a living allowance of $13,000, paid in regular increments. Fellow who serve fewer than twelve months receive a prorated living allowance. Fellows may receive a living allowance greater than $13,000 only if they are part of a professional corps and are supported entirely by public or private organizations (e.g., Fellows on paid sabbaticals), with the Corporation's support limited to the provision of education awards.

Sponsor's Role

Each sponsor determines the process for the recruitment and selection of AmeriCorps Promise Fellows in its respective area. State commissions are encouraged to use their Unified State Plan as the basis for their plans. The sponsor must certify that the host organization in which the Fellow is being placed is conducting activities that contribute to one or more of the five goals of the Presidents' Summit, and that this is part of a larger effort to provide all five of the fundamental resources to children and youth.

The Corporation anticipates that host organizations generally will be local

nonprofit organizations that are engaged in activities in support of the goals of the Presidents' Summit. Fellows may serve at a State Commission only under limited circumstances. In proposing such an arrangement, a State Commission must describe how it will comply with (1) the prohibition on State Commissions operating any national service program receiving financial assistance from the Corporation and (2) the prohibition on a State Commission receiving Corporation assistance to carry out activities that are already supported by its administrative grant from the Corporation. A State Commission proposing this arrangement must also submit a detailed position description for the Fellow. Fellowships may not be used simply to supplement the numbers of AmeriCorps Members at existing programs already carrying out activities consistent with the goals of the Presidents' Summit. Rather, the role of AmeriCorps Promise Fellows should be to provide higher level support that will enable an organization to become more involved, or to substantially increase the amount or quality of activities supporting achievement of the Presidents' Summit's five goals.

Sponsors are responsible for ensuring compliance with required elements of the Fellowship program. These requirements, which will be individually described in the grant agreement between the Corporation and the sponsor, include, but are not limited to, the following:

- Providing office space, supplies, and equipment.
- Providing a living allowance.
- Paying and withholding FICA taxes.
- Withholding income taxes.
- Providing unemployment insurance if required by State law.
- Providing workers' compensation if required by State law or obtaining insurance to cover service-related injuries.
- Providing liability insurance to cover claims relating to Fellows.
- Providing adequate training and supervision.
- Ensuring that Fellows not engage in prohibited activities (such as lobbying).
- Complying with statutory prohibitions on uses of assistance (such as displacement, discrimination).
- Providing a grievance procedure that meets statutory standards.
- Verifying and submitting timely documentation relating to each Fellow's eligibility for an education award.
- Providing an adequate financial management system.
- Complying with other reporting requirements.

Contents of the Sponsor Application

Sponsor applications must contain the following information:

1. Background concerning the applicant's current efforts to achieve the goals of the Presidents' Summit.
2. A designation of the organizations where the Fellows will be assigned, including the process used to select host organizations and background concerning the selected organizations and the roles they are playing in local summit follow-up. If the organizations are not yet designated, the application should describe the process that the sponsor will use to designate such entities.
3. A description of the activities that the Fellows will perform, including an indication about how the activities will support significant growth and/or improvements in the quality of efforts to meet the five goals of the Presidents' Summit. If the Fellow serves at a State Commission, a detailed position description must be provided.
4. An estimated budget to carry out the program, consistent with the description below.

The application may not exceed 21 double-spaced pages in length; more detailed instructions concerning the contents of the application are contained in the application package.

The Corporation will provide additional information concerning this program on its web site and will use the web site to announce any conference calls for potential applicant organizations scheduled before the application deadline.

Budget and Finances

The Corporation will issue grants on a fixed amount per Fellow basis, not to exceed $13,000 for the first five Fellowships in the grant, nor $10,000 for the sixth through the 30th Fellowship. These amounts exclude the education award. The sponsor assumes full financial responsibility for the program. Sponsors must provide the additional financial support necessary to carry out their proposed Fellowship program. To the extent that a sponsor provides a significant portion of the costs such that it notably reduces the Corporation's funding per Fellowship, additional Fellowships may be supported. The Corporation strongly encourages cost-sharing proposals, consistent with the guidelines in this Notice, to leverage Corporation resources and maximize the number of Fellows.

The Corporation is currently exploring the feasibility of implementing a fixed price award mechanism that would not require Corporation monitoring of actual costs incurred. To use this mechanism, the Corporation would determine that the cost principles normally applicable to Federal awards do not apply and in that case the sponsor would not be required to account to the Corporation for actual costs incurred.

In addition to the approved grant amount, the Corporation will provide an education award to Fellows who successfully complete their term of service. The Corporation will sponsor national training events to provide Fellows with an opportunity to come together to assess national progress in meeting the goals of the Presidents' Summit. The Corporation will also promote the availability of these Fellowships.

The Corporation anticipates that these grants will be renewable for up to a three-year period, subject to performance and the availability of appropriations.

Process for Selecting Sponsors

The Corporation anticipates initially supporting 5–30 AmeriCorps Promise Fellowships under each grant, with the exact amount depending upon the proposal and the level of non-Corporation support. After September 10, 1998, if a sponsor identifies additional non-Corporation resources to support more Fellowships, the sponsor may propose to increase the number of its Fellows. In such instances, the Corporation may approve additional education awards subject to their availability, and the number of Fellowships per sponsor may exceed 30.

In selecting sponsors, the Corporation will consider: Program design (60%), including (in order of importance) getting things done to help achieve the five goals of the Presidents' Summit, fostering the skills and leadership development of Fellows, and strengthening communities; organizational capacity (25%); and budget/cost effectiveness (15%). The Corporation will make all final decisions concerning approval of these grants for Fellowships. Given the Corporation's interest in having the common elements for the Fellowships that are described above, the Corporation announces its intent to enter into such negotiations with any sponsor in a manner that may require revisions to the original grant proposal.

Dated: July 15, 1998.

Kenneth L. Klothen,

General Counsel, Corporation for National and Community Service.

[FR Doc. 98–19238 Filed 7–17–98; 8:45 am]

BILLING CODE 6050–28–P

CORPORATION FOR NATIONAL AND COMMUNITY SERVICE

Request for Comment on Proposed Criteria Used to Select and Evaluate National Service Programs

AGENCY: Corporation for National and Community Service.

ACTION: Request for comment.

SUMMARY: The Corporation for National and Community Service (Corporation) invites comments on proposed changes to the criteria it uses to select and evaluate national service programs. The Corporation applies these criteria to the following categories of national service programs: Learn and Serve America; National Senior Service Corps; AmeriCorps*VISTA; and AmeriCorps*State and National. The revised criteria will apply beginning in 1999 to the Corporation's selection of projects and programs, including recompetitions, and will be phased in for continuing projects and programs over the next year.

DATES: The deadline for the submission of comments is August 19, 1998.

ADDRESSES: Comments should be submitted to the Office of Planning and Program Integration, Corporation for National Service, 1201 New York Avenue NW, Washington, D.C. 20525.

FOR FURTHER INFORMATION CONTACT: Nancy Talbot, (202) 606–5000, ext. 470. T.D.D. (202) 565–2799. For individuals with disabilities, information will be made available in alternative formats upon request.

SUPPLEMENTARY INFORMATION:

A. Background

The Corporation for National and Community Service was established in 1993 to engage Americans of all ages and backgrounds in service to their communities. The Corporation's national and community service programs provide opportunities for participants to serve full-time and part-time, with or without stipend, as individuals or as a part of a team. AmeriCorps*State and National, VISTA, and National Civilian Community Corps engage thousands of Americans on a full-or part-time basis at more than 1,000 locations to help communities meet their toughest challenges. Learn and Serve America integrates service into the academic life of more than 800,000 students in all 50 states. The National Senior Service Corps utilizes the skills, talents and experience of over 500,000 older Americans to help make communities stronger, safer, healthier and smarter.

The Corporation provides assistance to organizations that carry out AmeriCorps*State and National, Learn and Serve America, and National Senior Service Corps programs. AmeriCorps*State and National programs, which involve 25,000 Americans each year in results-driven community service, are grant programs managed by (1) State Commissions that select and oversee programs operated by local organizations, (2) national non-profit organizations that identify and act as parent organizations for operating sites across the country; (3) Indian tribes; or (4) U.S. Territories. Learn and Serve America grants provide service learning opportunities for students in K–12 and higher education settings. The National Senior Service Corps operates through grants to local organizations for Retired Senior Volunteer Programs (RSVP), Foster Grandparents and Senior Companions to provide service to their communities.

The Corporation plays a direct role in carrying out the AmeriCorps*VISTA program in assigning more than 4,000 AmeriCorps*VISTA members to service programs across the nation where they develop grassroots programs, mobilize resources and build capacity. The Corporation itself operates the AmeriCorps*NCCC (National Civilian Community Corps) program, providing an opportunity for approximately 1,000 individuals between the ages of 18 and 24 to participate in a residential program principally located on downsized military bases.

For additional information on the national service programs supported by the Corporation, go to *http://www.nationalservice.org.*

While recognizing the particular aspects of the different types of national service programs, the Corporation seeks to make its evaluation criteria more consistent across programs. The proposed criteria for 1999 reflect an ongoing effort by the Corporation to streamline and harmonize the various application processes for organizations seeking support for their national service programs. The Corporation's Board of Directors has reviewed and endorsed the proposed 1999 evaluation criteria.

The Corporation will use the proposed evaluation criteria in selecting new and recompeting projects and programs and to assess the performance of organizations who have received assistance to carry out national service programs. Implementation of the criteria will begin with the issuance of 1999 guidance to the field. Because the criteria relate principally to programming and operations, they will not necessarily apply to other activities, such as technical assistance, supported by the Corporation.

The Corporation will provide additional guidance in application materials for each category of national service program. The additional guidance will state how the criteria will be applied, depending on the category of program (e.g., Learn and Serve America, National Senior Service Corps) and the nature of the application for assistance (new, recompeting, or continuation).

B. Evaluation Criteria Common to National Service Programs Assisted by the Corporation

1. Criteria

The following three categories (and the three sub-categories under Program Design) constitute the criteria by which the Corporation will select and evaluate organizations receiving assistance in Learn and Serve America, National Senior Service Corps, AmeriCorps*VISTA, and AmeriCorps*State and National.

a. Program Design (60%), which includes as subcategories:

i. *Getting Things Done,* meeting needs in the areas of education, public safety, the environment, and health and human needs;

ii. *Strengthening Communities;* and

iii. *Fostering Participant Development.*

b. Organizational Capacity (25%)

c. Budget/Cost-Effectiveness (15%)

2. Factors That May Be Applied Within Each Category or Sub-Category

Within each category or subcategory, the Corporation may apply the following factors, depending on the type of program and the nature of the application. While the majority of factors will apply to all programs supported by the Corporation, some may not, and each type of program may place a different emphasis on the respective factors. In addition, some of the factors may be used to assess program *outcomes* rather than initial applications for assistance. The Corporation will provide subsequent guidance in its application materials for each category of national service program, stating whether and how these factors will be applied.

a. Program Design (60%)

i. Getting Things Done

- Well-documented compelling community need(s).
- Well-designed activities with measurable goals and objectives that meet community needs.
- Well-defined roles for participants that lead to measurable outcomes/impact.
- Effective involvement of target community in planning/implementation.
- Ability to provide or secure effective technical assistance.

ii. Strengthening Communities.

- Strong community partnerships including well-defined roles for community partners.
- Potential for sustainability, innovation and/or replicability of project activities.
- Enhanced capacity of organizations and institutions.
- Mobilization of community resources, including volunteers.
- Bring together persons of diverse backgrounds.

iii. Participant Development.

- Effective plans for recruiting, developing, training, supervising, and recognizing participants.
- Well-designed activities that promote an ethic of service/civic responsibility.
- Well-designed plan to engage participants in high quality service-learning as defined by the Corporation.
- Learn to serve together with persons of diverse backgrounds.

b. Organizational Capacity (25%)

- Ability to provide sound programmatic and fiscal oversight.
- Sound track record in the issue area(s) to be addressed by the project.
- Well-defined roles for staff/administrators.
- Well-designed plans or systems for self-assessment, evaluation and continuous improvement.

c. Budget/Cost-Effectiveness (15%)

- Budget adequately supports program design.
- Applicant organization/host agency is committed to securing resources for program implementation and/or sustainability.
- Cost-effective within program guidance.

3. Subcategories Within Program Design

To reflect the differences between Learn and Serve America, National Senior Service Corps, AmeriCorps*VISTA, and AmeriCorps*State and National, the Corporation proposes to apply different values to the three subcategories within Program Design for each category of national service program. Thus, while Program Design will uniformly constitute 60% of an organization's evaluation, the Corporation may, for each national service program, place a different value on getting things done, strengthening communities and fostering participant development, as follows:

*AmeriCorps*State and National:* Getting things done in communities—things that would not have gotten done but for AmeriCorps—has been the core purpose for AmeriCorps*State and National. Program emphasis is placed on well-designed program activities that result in direct and demonstrable benefits that are both needed and valued by communities. Strengthening communities is mainly accomplished by mobilizing community resources and enhancing the capacity of organizations and institutions in order to achieve sustainability. AmeriCorps* State and National programs are required to develop specific strengthening communities and participant development objectives with demonstrable outcomes.

*AmeriCorps*VISTA* shifts the emphasis and gets things done more by mobilizing community resources and developing the capacity of community organizations. Strengthening communities is at the heart of AmeriCorps*VISTA's mission. The potential for sustainability, enhanced capacity, and mobilization of community resources (including volunteers), encompasses AmeriCorps*VISTA's most significant program measures and forms the basis of virtually all overall program evaluation activity.

Learn and Serve America's definition of getting things done must include measures of service-learning. A major concern is how participants will learn while engaging in projects that get things done and benefit the community. Learn and Serve emphasizes lasting impact on the community as a result of community involvement and school or institutional change. Increasing the acceptance of service-learning as a pedagogy and tool for strengthening communities is an essential goal of the program. Within Learn and Serve America appropriate participant development occurs through well-designed service-learning experiences that have as an integral component, positive community impact.

The National Senior Service Corps' incorporation of Programming for Impact has placed a new and significant emphasis on getting things done. Aside from the previous focus of providing a volunteer opportunity, there is an emphasis on channeling and utilizing the capabilities of participants to address critical community and human needs. The traditional Senior Corps philosophy is that participant development is very important. However, the starting point must be good, solid roles and activities viewed by the community as valued and important, that establish a context within which participant development occurs.

Within Program Design, the Corporation will consider the three subcategories in descending order of importance, as follows:

AmeriCorps*State and National
(1) Getting Things Done
(2) Participant Development
(3) Strengthening Communities

AmeriCorps*VISTA
(1) Strengthening Communities
(2) Getting Things Done
(3) Participant Development

Learn and Serve America
Getting Things Done—equal
Strengthening Communities—equal
Participant Development—equal

National Senior Service Corps
(1) Getting Things Done
(2) Strengthening Community
(3) Participant Development

Dated: July 14, 1998.

Kenneth L. Klothen,

General Counsel.

[FR Doc. 98–19210 Filed 7–17–98; 8:45 am]

BILLING CODE 6050–28–P

DEPARTMENT OF DEFENSE

Waiver of 10 U.S.C. 2534 for Certain Defense Items Produced in the United Kingdom

AGENCY: Department of Defense, (DoD).

ACTION: Notice of waiver of 10 U.S.C. 2534 for certain defense items produced in the United Kingdom.

SUMMARY: The Under Secretary of Defense (Acquisition and Technology) is waiving the limitation of 10 U.S.C. 2534 for certain defense items produced in the United Kingdom (UK). 10 U.S.C. 2534 limits DoD procurement of certain items to sources in the national technology and industrial base. The waiver will permit procurement of items enumerated from sources in the UK.

EFFECTIVE DATE: This waiver is effective for one year, beginning August 4, 1998.

FOR FURTHER INFORMATION CONTACT: Mr. Walter Henderson, OUSD (A&T), Director of Defense Procurement, Foreign Contracting, Room 3C762, 3060

Defense Pentagon, Washington, DC 20301–3060, telephone (703) 697–9351.

SUPPLEMENTARY INFORMATION: Subsection (a) of 10 U.S.C. 2534 provided that the Secretary of Defense may procure the items listed in that subsection only if the manufacturer of the item is part of the national technology and industrial base. Subsection (i) of 10 U.S.C. 2534 authorizes the Secretary of Defense to exercise the waiver authority in subsection (d), on the basis of the applicability of paragraph (2) or (3) of that subsection, only if the waiver is made for a particular item listed in subsection (a) and for particular foreign country. Subsection (d) authorizes a waiver if the Secretary determines that application of the limitation ''would impede the reciprocal procurement of defense items under a memorandum of understanding providing for reciprocal procurement of defense items'' and if he determines that ''that country does not discriminate against defense items produced in the United States to a greater degree than the United States discriminates against defense items produced in that country.'' The Secretary of Defense has delegated the waiver authority of 10 U.S.C. 2534(d) to the Under Secretary of Defense (Acquisition and Technology).

DoD has a reciprocal procurement Memorandum of Understanding (MOU) with the UK that was signed on December 4, 1994.

The Under Secretary of Defense (Acquisition and Technology) finds that UK does not discriminate against defense items produced in the United States to a greater degree that the United States discriminates against defense items produced in the UK, and also finds that application of the limitation in 10 U.S.C. 2534 against defense items produced in the UK would impede the reciprocal procurement of defense items under the MOU.

Under the authority of 10 U.S.C. 2534, the Under Secretary of Defense (Acquisition and Technology) has determined that application of the limitation of 10 U.S.C. 2534(a) to the procurement of any defense item produced in the UK that is listed below would impede the reciprocal procurement of defense items under the MOU with the UK.

On the basis of the foregoing, the Under Secretary of Defense (Acquisition and Technology) is waiving the limitation in 10 U.S.C. 2534(a) for procurements of any defense item listed below that is produced in the UK. This waiver applies only to the limitations in 10 U.S.C. 2534(a). It does not apply to any other limitation, including sections 8016 and 8073 of the National Defense Appropriations Act for Fiscal Year 1998 (Pub. L. 105–56). This waiver applies to procurements under solicitations issued on or after the effective date of this waiver. For contracts entered into prior to the effective date of this waiver, this waiver applies to procurements of the defense items listed below under—

(1) Subcontracts entered into on or after such effective date, provided the prime contract is modified to provide the Government adequate consideration such as lower cost or improve performance; and

(2) Options that are exercised after such effective date if the option prices are adjusted for any reason other than the application of the waiver, and if the contract is modified to provide the Government adequate consideration such as lower cost or improved performance.

List of Items to Which This Waiver Applies

1. Air circuit breakers.
2. Welded shipboard anchor and mooring chain with a diameter of four inches or less.
3. Gyrocompasses.
4. Electronic navigation chart systems.
5. Steering controls.
6. Pumps.
7. Propulsion and machinery control systems.
8. Totally enclosed lifeboats.
9. Ball and roller bearings.

Michele P. Peterson,

Executive Editor, Defense Acquisition Regulations Council.

[FR Doc. 98–19157 Filed 7–17–98; 8:45 am]

BILLING CODE 5000–04–M

DEPARTMENT OF DEFENSE

Uniformed Services University of the Health Sciences

Sunshine Act Meeting

AGENCY HOLDING THE MEETING: Uniformed Services University of the Health Sciences.

TIME AND DATE: 8:30 a.m. to 4:00 p.m., August 3, 1998.

PLACE: Uniformed Services University of the Health Sciences, Board of Regents Conference Room (D3001), 4301 Jones Bridge Road, Bethesda, MD 20814–4799.

STATUS: Open—under ''Government in the Sunshine Act'' (5 U.S.C. 552b(e)(3)).

MATTERS TO BE CONSIDERED:

8:30 a.m.—Meeting—Board of Regents

(1) Approval of Minutes—May 15, 1998
(2) Faculty Matters
(3) Departmental Reports
(4) Financial Report
(5) Report—President, USUHS
(6) Report—Dean, School of Medicine
(7) Report—Dean, Graduate School of Nursing
(8) Comments—Chairman, Board of Regents
(9) New Business

CONTACT PERSON FOR MORE INFORMATION: Mr. Bobby D. Anderson, Executive Secretary of the Board of Regents, (301) 295–3116.

Linda Bynum,

OSD Federal Register Liaison Officer, Department of Defense.

[FR Doc. 98–19346 Filed 7–16–98; 10:54 am]

BILLING CODE 5000–04–M

DEPARTMENT OF EDUCATION

Submission for OMB Review; Comment Request

AGENCY: Department of Education.

ACTION: Submission for OMB review; comment request.

SUMMARY: The Acting Deputy Chief Information Officer, Office of the Chief Information Officer, invites comments on the submission for OMB review as required by the Paperwork Reduction Act of 1995.

DATES: Interested persons are invited to submit comments on or before August 19, 1998.

ADDRESSES: Written comments should be addressed to the Office of Information and Regulatory Affairs, Attention: Danny Werfel, Desk Officer, Department of Education, Office of Management and Budget, 725 17th Street, NW., Room 10235, New Executive Office Building, Washington, DC 20503. Requests for copies of the proposed information collection requests should be addressed to Patrick J. Sherrill, Department of Education, 600 Independence Avenue, SW, Room 5624, Regional Office Building 3, Washington, DC 20202–4651.

FOR FURTHER INFORMATION CONTACT: Patrick J. Sherrill (202) 708–8196. Individuals who use a telecommunications device for the deaf (TDD) may call the Federal Information Relay Service (FIRS) at 1–800–877–8339 between 8 a.m. and 8 p.m., Eastern time, Monday through Friday.

SUPPLEMENTARY INFORMATION: Section 3506 of the Paperwork Reduction Act of 1995 (44 U.S.C. Chapter 35) requires that the Office of Management and Budget (OMB) provide interested Federal agencies and the public an early

opportunity to comment on information collection requests. OMB may amend or waive the requirement for public consultation to the extent that public participation in the approval process would defeat the purpose of the information collection, violate State or Federal law, or substantially interfere with any agency's ability to perform its statutory obligations. The Acting Deputy Chief Information Officer, Office of the Chief Information Officer, publishes this notice containing proposed information collection requests prior to submission of these requests to OMB. Each proposed information collection, grouped by office, contains the following: (1) Type of review requested, e.g., new, revision, extension, existing or reinstatement; (2) Title; (3) Summary of the collection; (4) Description of the need for, and proposed use of, the information; (5) Respondents and frequency of collection; and (6) Reporting and/or Recordkeeping burden. OMB invites public comment at the address specified above. Copies of the requests are available from Patrick J. Sherrill at the address specified above.

Dated: July 14, 1998.

Hazel Fiers,

Acting Deputy Chief Information Officer, Office of the Chief Information Officer.

Office of Special Education and Rehabilitative Services

Type of Review: Extension.

Title: Grant Application for RSA Discretionary Program.

Frequency: Annually.

Affected Public: Businesses or other for-profits; Not-for-profit institutions; State, local or Tribal Gov't; SEAs or LEAs.

Reporting and Recordkeeping Hour Burden: Responses: 1,800. Burden Hours: 72,000.

Abstract: Discretionary Grant Application and Instructions for Rehabilitation Services Programs are required so that all applications are uniformly completed in accordance with the specific and unique requirements of the various RSA programs.

This information collection is being submitted under the Streamlined Clearance Process for Discretionary Grant Information Collections (OMB Control No. 1890–0001). Therefore, this 30-day public comment period will be the only public comment notice published for this information collection.

[FR Doc. 98–19206 Filed 7–17–98; 8:45 am]

BILLING CODE 4000–01–P

DEPARTMENT OF EDUCATION

Submission for OMB Review; Comment Request

AGENCY: Department of Education.

ACTION: Correction notice.

SUMMARY: On July 13, 1998, a 60-day notice inviting comments from the public was inadvertently published for the National Longitudinal Survey of Schools (NLSS). A 60-day notice was published for this survey in the **Federal Register** (63 FR 13395–13396) dated March 19, 1998. This notice amends the public comment period for this survey to 30 days. The Acting Deputy Chief Information Officer, Office of the Chief Information Officer, hereby issues a correction notice on the submission for OMB review as required by the Paperwork Reduction Act of 1995.

DATES: Interested persons are invited to submit comments on or before August 19, 1998.

ADDRESSES: Written comments should be addressed to the Office of Information and Regulatory Affairs, Attention: Danny Werfel, Desk Officer, Department of Education, Office of Management and Budget, 725 17th Street, NW., Room 10235, New Executive Office Building, Washington, DC 20503. Requests for copies of the proposed information collection requests should be addressed to Patrick J. Sherrill, Department of Education, 600 Independence Avenue, S.W., Room 5624, Regional Office Building 3, Washington, D.C. 20202–4651.

FOR FURTHER INFORMATION CONTACT: Patrick J. Sherrill (202) 708–8196. Individuals who use a telecommunications device for the deaf (TDD) may call the Federal Information Relay Service (FIRS) at 1–800–877–8339 between 8 a.m. and 8 p.m., Eastern time, Monday through Friday.

SUPPLEMENTARY INFORMATION: Section 3506 of the Paperwork Reduction Act of 1995 (44 U.S.C. Chapter 35) requires that the Office of Management and Budget (OMB) provide interested Federal agencies and the public an early opportunity to comment on information collection requests. OMB may amend or waive the requirement for public consultation to the extent that public participation in the approval process would defeat the purpose of the information collection, violate State or Federal law, or substantially interfere with any agency's ability to perform its statutory obligations. The Acting Deputy Chief Information Officer, Office of the Chief Information Officer, publishes this notice containing proposed information collection requests prior to submission of these requests to OMB. Each proposed information collection, grouped by office, contains the following: (1) Type of review requested, e.g., new, revision, extension, existing or reinstatement; (2) Title; (3) Summary of the collection; (4) Description of the need for, and proposed use of, the information; (5) Respondents and frequency of collection; and (6) Reporting and/or Recordkeeping burden. OMB invites public comment at the address specified above. Copies of the requests are available from Patrick J. Sherrill at the address specified above.

Dated: July 14, 1998.

Hazel Fiers,

Acting Deputy Chief Information Officer, Office of the Chief Information Officer.

[FR Doc. 98–19207 Filed 7–17–98; 8:45 am]

BILLING CODE 4000–01–P

DEPARTMENT OF ENERGY

Environmental Management Site-Specific Advisory Board, Nevada Test Site

AGENCY: Department of Energy.

ACTION: Notice of open meeting.

SUMMARY: Pursuant to the provisions of the Federal Advisory Committee Act (Public Law 92–463, 86 Stat. 770) notice is hereby given of the following Advisory Committee meeting: Environmental Management Site-Specific Advisory Board (EM SSAB), Nevada Test Site.

DATES: Wednesday, August 5, 1998: 5:30 p.m.–9:00 p.m.

ADDRESSES: U.S. Department of Energy, Nevada Support Facility, Great Basin Room, 232 Energy Way, North Las Vegas, Nevada.

FOR FURTHER INFORMATION CONTACT: Kevin Rohrer, U.S. Department of Energy, Office of Environmental Management, P.O. Box 98518, Las Vegas, Nevada 89193–8513, phone: 702–295–0197.

SUPPLEMENTARY INFORMATION:

Purpose of the Board: The purpose of the Advisory Board is to make recommendations to DOE and its regulators in the areas of environmental restoration, waste management, and related activities.

Tentative Agenda

5:30 p.m.	Call to Order
5:40 p.m.	Presentations
7:00 p.m.	Public Comment/Questions
7:30 p.m.	Break
7:45 p.m.	Review Action Items
8:00 p.m.	Approve Meeting Minutes

8:10 p.m. Committee Reports
8:45 p.m. Public Comment
9:00 p.m. Adjourn

Copies of the final agenda will be available at the meeting.

Public Participation: The meeting is open to the public. Written statements may be filed with the Committee either before or after the meeting. Individuals who wish to make oral statements pertaining to agenda items should contact Kevin Rohrer, at the telephone number listed above. Requests must be received 5 days prior to the meeting and reasonable provision will be made to include the presentation in the agenda. The Designated Federal Officer is empowered to conduct the meeting in a fashion that will facilitate the orderly conduct of business.

Minutes: The minutes of this meeting will be available for public review and copying at the Freedom of Information Public Reading Room, 1E–190, Forrestal Building, 1000 Independence Avenue, SW, Washington, DC 20585 between 9:00 a.m. and 4 p.m., Monday–Friday, except Federal holidays. Minutes will also be available by writing to Kevin Rohrer at the address listed above.

Issued at Washington, DC, on July 15, 1998.

Rachel M. Samuel,

Deputy Advisory Committee Management Officer.

[FR Doc. 98–19240 Filed 7–17–98; 8:45 am]

BILLING CODE 6450–01–P

DEPARTMENT OF ENERGY

Environmental Management Site-Specific Advisory Board, Oak Ridge Reservation

AGENCY: Department of Energy.

ACTION: Notice of open meeting.

SUMMARY: Pursuant to the provisions of the Federal Advisory Committee Act (Public Law 92–463, 86 Stat. 770) notice is hereby given of the following Advisory Committee meeting: Environmental Management Site-Specific Advisory Board (EM SSAB), Oak Ridge Reservation.

DATES: Wednesday, August 5, 1998 6:00 p.m.–9:30 p.m.

ADDRESSES: Ramada Inn, 420 S. Illinois Avenue, Oak Ridge, TN 37830.

FOR FURTHER INFORMATION CONTACT: Marianne Heiskell, Ex-Officio Officer, Department of Energy Oak Ridge Operations Office, 105 Broadway, Oak Ridge, TN 37830, (423) 576–0314.

SUPPLEMENTARY INFORMATION:

Purpose of the Board: The purpose of the Board is to make recommendations to DOE and its regulators in the areas of environmental restoration, waste management, and related activities.

Tentative Agenda: The meeting will focus on regular Board business and preparation of the FY 1998 Annual Report/FY 1999 Work Plan.

Public Participation: The meeting is open to the public. Written statements may be filed with the Committee either before or after the meeting. Individuals who wish to make oral statements pertaining to agenda items should contact Marianne Heiskell at the address or telephone number listed above. Requests must be received 5 days prior to the meeting and reasonable provision will be made to include the presentation in the agenda. The Designated Federal Officer is empowered to conduct the meeting in a fashion that will facilitate the orderly conduct of business. Each individual wishing to make public comment will be provided a maximum of 5 minutes to present their comments near the beginning of the meeting.

Minutes: The minutes of this meeting will be available for public review and copying at the Freedom of Information Public Reading Room, 1E–190, Forrestal Building, 1000 Independence Avenue, SW, Washington, DC 20585 between 9:00 a.m. and 4 p.m., Monday–Friday, except Federal holidays. Minutes will also be available at the Department of Energy's Information Resource Center at 105 Broadway, Oak Ridge, TN between 8:30 am and 5:00 pm on Monday, Wednesday, and Friday; 8:30 am and 7:00 pm on Tuesday and Thursday; and 9:00 am and 1:00 pm on Saturday, or by writing to Marianne Heiskell, Department of Energy Oak Ridge Operations Office, 105 Broadway, Oak Ridge, TN 37830, or by calling her at (423) 576–0314.

Issued at Washington, DC, on July 15, 1998.

Rachel M. Samuel,

Deputy Advisory Committee Management Officer.

[FR Doc. 98–19241 Filed 7–17–98; 8:45 am]

BILLING CODE 6450–01–P

DEPARTMENT OF ENERGY

Environmental Management Site-Specific Advisory Board, Rocky Flats

AGENCY: Department of Energy.

ACTION: Notice of open meeting.

SUMMARY: Pursuant to the provisions of the Federal Advisory Committee Act (Public Law 92–463, 86 Stat. 770) notice is hereby given of the following Advisory Committee meeting: Environmental Management Site-Specific Advisory Board (EM SSAB), Rocky Flats

DATES: Thursday, August 6, 1998, 6:00 p.m.–9:30 p.m.

ADDRESSES: Westminster City Hall, Lower-level Multi-purpose Room, 4800 West 92nd Avenue, Westminster, CO.

FOR FURTHER INFORMATION CONTACT: Ken Korkia, Board/Staff Coordinator, EM SSAB-Rocky Flats, 9035 North Wadsworth Parkway, Suite 2250, Westminster, CO 80021, phone: (303) 420–7855, fax: (303) 420–7579.

SUPPLEMENTARY INFORMATION:

Purpose of the Board: The purpose of the Board is to make recommendations to DOE and its regulators in the areas of environmental restoration, waste management, and related activities.

Tentative Agenda

1. The Board will hear a presentation from the Consortium for Rick Evaluation with Stakeholder Participation (CRESP) about the status of an upcoming survey of area residents about Rocky Flats issues.
2. The Board will consider a recommendation drafted by the Site Wide Issues/Budget Focus Group on worker benefits.
3. Staff will present information to the Board on the source evaluation for Walnut Creek Contaminant Exceedance.
4. The Board will discuss planning efforts for an upcoming community forum it is sponsoring.

Other topics will likely be added prior to the meeting date. A copy of the final agenda will be available at the meeting.

Public Participation: The meeting is open to the public. Written statements may be filed with the Committee either before or after the meeting. Individuals who wish to make oral statements pertaining to agenda items should contact Ken Korkia at the address or telephone number listed above. Requests must be received 5 days prior to the meeting and reasonable provision will be made to include the presentation in the agenda. The Designated Federal Official is empowered to conduct the meeting in a fashion that will facilitate the orderly conduct of business. Each individual wishing to make public comment will be provided a maximum of 5 minutes to present their comments at the beginning of the meeting.

Minutes: The minutes of this meeting will be available for public review and copying at the Freedom of Information Public Reading Room, 1E–190, Forrestal Building, 1000 Independence Avenue, SW, Washington, DC 20585 between 9:00 a.m. and 4 p.m., Monday–Friday, except Federal holidays. Minutes will also be available at the Public Reading

Room located at the Board's office at 9035 North Wadsworth Parkway, Suite 2250, Westminster, CO 80021; telephone (303) 420–7855. Hours of operation for the Public Reading Room are 9:00 am and 4:00 pm on Monday through Friday. Minutes will also be made available by writing or calling Deb Thompson at the Board's office address or telephone number listed above.

Issued at Washington, DC on July 15, 1998.

Rachel M. Samuel,

Deputy Advisory Committee Management Officer.

[FR Doc. 98–19242 Filed 7–17–98; 8:45 am]

BILLING CODE 6450–01–P

DEPARTMENT OF ENERGY

Federal Energy Regulatory Commission

[Project No. 11150–000]

Cameron Gas & Electric Company; Notice of Site Visit to Project Area

July 14, 1998.

On July 21, 1998, the Federal Energy Regulatory Commission staff will visit the Smithville Mix Hydro Project No. 11150, located on the Grand River in the City of Eaton Rapids, Eaton County, Michigan.

The site visit is scheduled to begin at 12:30 p.m. at the Mix Plant on Route 50, Main Street, Eaton Rapids, Michigan.

If you have any questions concerning this matter, please contact Mr. William Guey-Lee at (202) 219–2808 or Mr. Robert Evans at (517) 347–4048.

Linwood A. Watson, Jr.,

Acting Secretary.

[FR Doc. 98–19231 Filed 7–17–98; 8:45 am]

BILLING CODE 6717–01–M

DEPARTMENT OF ENERGY

Federal Energy Regulatory Commission

[Docket No. RP98–346–000]

Carnegie Interstate Pipeline Company; Notice of Proposed Changes in FERC Gas Tariff

July 14, 1998.

Take notice that on July 8, 1998, Carnegie Interstate Pipeline Company (CIPCO) tendered for filing as part of its FERC Gas Tariff, Original Volume No. 1, the following tariff sheet, to be effective August 1, 1998.

Second Revised Sheet No. 146

CIPCO states that this filing is being made in compliance with Commission Order No. 587–G, issued by the Commission on April 16, 1998, Through this filing, CIPCO adopts by reference Version 1.2 of the GISB standards. CIPCO requests waiver of section 154.207 of the Commission's regulations to permit the tariff sheet to become effective on August 1, 1998.

Any person desiring to be heard or to protest this filing should file a motion to intervene or a protest with the Federal Energy Regulatory Commission, 888 First Street, NE, Washington, DC 20426, in accordance with Sections 385.214 and 385.211 of the Commission's Rules and Regulations. All such motions or protests must be filed as provided in Section 154.210 of the Commission's Regulations. Protests will be considered by the Commission in determining the appropriate action to be taken, but will not serve to make protestants parties to the proceedings. Any person wishing to become a party must file a motion to intervene. Copies of this filing are on file with the Commission and are available for public inspection in the Public Reference Room.

Linwood A. Watson, Jr.,

Acting Secretary.

[FR Doc. 98–19193 Filed 7–17–98; 8:45 am]

BILLING CODE 6717–01–M

DEPARTMENT OF ENERGY

Federal Energy Regulatory Commission

[Docket No. RP98–346–001]

Carnegie Interstate Pipeline Company; Notice of Compliance Filing

July 14, 1998.

Take notice that on July 8, 1998, Carnegie Interstate Pipeline Company (CIPCO) tendered for filing as part of its FERC Gas Tariff, Original Volume No. 1, the following tariff sheet, to be effective August 1, 1998.

Fourth Revised Sheet No. 146

CIPCO states that this filing is being made in compliance with Commission Order No. 587–G, issued by the Commission on April 16, 1998. Through this filing, CIPCO adopts by reference Version 1.2 of the GISB standards. CIPCO requests waiver of section 154.207 of the Commission's regulations to permit the tariff sheet to become effective on August 1, 1998.

Any person desiring to protest this filing should file a protest with the Federal Energy Regulatory Commission, 888 First Street, NE, Washington, DC 20426, in accordance with Section 385.211 of the Commission's Rules and Regulations. All such protests must be filed as provided in Section 154.210 of the Commission's Regulations. Protests will be considered by the Commission in determining the appropriate action to be taken, but will not serve to make protestants parties to the proceedings. Copies of this filing are on file with the Commission and are available for public inspection in the Public Reference Room.

Linwood A. Watson, Jr.,

Acting Secretary.

[FR Doc. 98–19194 Filed 7–17–98; 8:45 am]

BILLING CODE 6717–01–M

DEPARTMENT OF ENERGY

Federal Energy Regulatory Commission

[Docket No. RP98–91–007]

CNG Transmission Corporation; Notice of Compliance Tariff Filing

July 14, 1998.

Take notice that on July 9, 1998, CNG Transmission Corporation (CNG), tendered for filing as part of its FERC Gas Tariff, Second Revised Volume No. 1, the following revised tariff sheet, with an effective date of June 15, 1998:

2nd Sub. Third Revised Sheet No. 361A

CNG states that the purpose of this filing is to comply with the Letter Order issued by the Commissions in the above-captioned proceeding on June 24, 1998. Specifically, CNG states that its revised tariff sheet complies with the directive of the June 24 Letter Order, by establishing a July 1, 1998 commencement date for the thirty-month period established in Section 18.5 of the General Terms and Conditions of CNG's tariff.

CNG states that copies of its filing have been mailed to its customers and interested state commissions.

Any person desiring to protest this filing should file a protest with the Federal Energy Regulatory Commission, 888 First Street, N.E., Washington, D.C. 20426, in accordance with Section 385.211 of the Commission's Rules and Regulations. All such protests must be filed as provided in Section 154.210 of the Commission's Regulations. Protests will be considered by the Commission in determining the appropriate action to be taken, but will not serve to make protestants parties to the proceedings. Copies of this filing are on file with the Commission and are available for public

inspection in the Public Reference Room.

Linwood A. Watson, Jr.,

Acting Secretary.

[FR Doc. 98–19202 Filed 7–17–98; 8:45 am]

BILLING CODE 6717–01–M

DEPARTMENT OF ENERGY

Federal Energy Regulatory Commission

[Docket No. CP98–652–000]

Conoco Inc.; Notice of Petition for Declaratory Order

July 14, 1998.

Take notice that on July 2, 1998, Conoco Inc. (Conoco), 600 N. Dairy Ashford, Houston, Texas 77079, filed a petition pursuant to Section 207(a)(2) of the Commission's Regulations requesting that the Commission issue an order disclaiming jurisdiction under Section 1(b) of the Natural Gas Act for the subject facilities to be acquired from Northern Natural Gas Company (Northern), known as the Tejas and Champlin facilities, located in Glasscock, Irion, Reagan, Sterling, and Tom Green Counties, Texas, all as more fully set forth in the application which is on file with the Commission and open to public inspection.

Concurrently with this filing, Northern, in Docket No. CP98–649–000, filed an application to abandon by sale certain facilities known as the Tejas and Champlin facilities. The Tejas facilities consist of the Dorchester Lateral, Edmundson Lateral, Tejas Lateral, Irion Co. #2 Lateral. The longest and largest lateral in the Tejas system is 28 miles of 8-inch pipe; the other laterals are: 8 miles of 6-inch pipe, 5 miles of 6-inch pipe, 5 miles of 8-inch pipe and 3 miles of 6-inch pipe. According to Conoco, Northern is not conveying any compressors nor will Northern be providing any compression service on the subject facilities after the proposed sale. Conoco intends to operate the re-configured segments of the Tejas lateral on a low pressure basis (approximately 50 # psia). Conoco states that it will use existing field compression to gather and transport raw natural gas to processing plants. Conoco contends that after the proposed reconfiguration, all of the gas gathered on these segments will be raw, untreated production gas. Additionally, Conoco states that only minimal mechanical dehydration and separation will be performed at or near the wellheads. Conoco states that all segments will tie into existing gathering lines that feed existing gas processing and treating plants and they will be behind the plant. According to Conoco, after the facilities are reconfigured and tied to its existing gathering lines these facilities will be upstream of existing gathering lines, upstream of any existing central point in the field, and there will be wells located throughout the system.

The Champlin system consists of approximately 14 miles of 6-inch pipe. Conoco states that there is presently no compressors on this system. However, Conoco notes that it will use existing compression on its current gathering system to reverse the original flow of the line. Once the lateral is connected, the original flow of the line. Once the lateral is connected, the original flow of the line. Once the lateral is connected, the pressure of the gathering system is expected to be approximately 50 #psia. Conoco states that the gas gathered by this lateral will be raw, untreated production gas. Conoco notes that the lateral will be upstream of existing gathering lines and integrated into its existing gathering system.

Any person desiring to be heard or to make a protest with reference to said application should, on or before August 4, 1998, file with the Federal Energy Regulatory Commission (888 First Street, NE., Washington, DC. 20426) a motion to intervene or a protest in accordance with the requirements of the Commission's Rules of Practice and Procedure (18 CFR 385.214 or 385.211) and the Regulations under the Natural Gas Act (18 CFR 157.10). All protests filed with the Commission will be considered by it in determining the appropriate action to be taken, but will not serve to make the protestants parties to the proceeding. Any person wishing to become a party to a proceeding or to participate as a party in any hearing therein must file a motion to intervene in accordance with the Commission's Rules.

Take further notice that, pursuant to the authority contained in and subject to the jurisdiction conferred upon the Federal Energy Regulatory Commission by Sections 7 and 15 of the Natural Gas Act and Commission's Rules of Practice and Procedure, a hearing will be held without further notice before the Commission is filed within the time required herein, if the Commission on its own review of the matter finds that permission and approval for the proposed abandonment are required by the public convenience and necessity. If a motion for leave to intervene is timely filed, or if the Commission on its own motion believes that a formal hearing is required, further notice of such hearing will be duly given.

Under the procedure herein provided for, unless otherwise advised, it will be unnecessary for Applicant to appear or be represented at the hearing.

Linwood A. Watson, Jr.,

Acting Secretary.

[FR Doc. 98–19191 Filed 7–17–98; 8:45 am]

BILLING CODE 6717–01–M

DEPARTMENT OF ENERGY

Federal Energy Regulatory Commission

[Docket No. RP98–350–000]

East Tennessee Natural Gas Company; Notice of Proposed Changes in FERC Gas Tariff

July 14, 1998.

Take notice that on July 10, 1998, East Tennessee Natural Gas Company (East Tennessee), tendered for filing as part of its FERC Gas Tariff, Second Revised Volume No. 1, the tariff sheets listed on Appendix A to the filing, with an effective date of August 1, 1998.

East Tennessee states that the revised tariff sheets are being made in compliance with the Commission's Order No. 587–G issued on April 16, 1998. Standards for Business Practices of Interstate Natural Gas Pipelines, 83 FERC ¶ 61,029 (1998). Consistent with Order No. 587–G, East Tennessee proposes an effective date of August 1, 1998. East Tennessee requests a waiver of Section 154.207 to permit an August 1, 1998 effective date.

East Tennessee states that the revised tariff sheets incorporate by reference Version 1.2 of the GISB standards.

East Tennessee states that copies of the filing have been mailed to each of the parties that have intervened in this proceeding.

Any person desiring to be heard or to protest this filing should file a motion to intervene or a protest with the Federal Energy Regulatory Commission, 888 First Street, NE., Washington, DC 20426, in accordance with Sections 385.214 and 385.211 of the Commission's Rules and Regulations. All such motions or protests must be filed as provided in Section 154.210 of the Commission's Regulations. Protests will be considered by the Commission in determining the appropriate action to be taken, but will not serve to make protestants parties to the proceedings. Any person wishing to become a party must file a motion to intervene. Copies of this filing are on file with the Commission and are available for public

inspection in the Public Reference Room.

Linwood A. Watson, Jr.,

Acting Secretary.

[FR Doc. 98–19196 Filed 7–17–98; 8:45 am]

BILLING CODE 6717–01–M

DEPARTMENT OF ENERGY

Federal Energy Regulatory Commission

[Docket No. RP98–347–000]

Eastern Shore Natural Gas Company; Notice of Proposed Changes in FERC Gas Tariff

July 14, 1998.

Take notice that on July 9, 1998, Eastern Shore Natural Gas Company (Eastern Shore) tendered for filing as part of its FERC Gas Tariff, Second Revised Volume No. 1, the following revised tariff sheets, with a proposed effective date of August 1, 1998:

Second Revised Sheet No. 141
Second Revised Sheet No. 143
Second Revised Sheet No. 160A
Second Revised Sheet No. 210

Eastern Shore states that the filing is being made pursuant to the Commission's Order issued April 16, 1998 in Docket No. 96–1–007 (Order No. 587–G) Standards for Business Practices of Interstate Natural Gas Pipelines, Eastern Shore tenders for filing the above listed tariff sheets adopting Version 1.2 as the current GISB standards.

Eastern Shore states that copies of its filing has been mailed to all firm customers, interruptible customers, and affected state commission.

Any person desiring to be heard or to protest this filing should file a motion to intervene or a protest with the Federal Energy Regulatory Commission, 888 First Street, N.E., Washington D.C. 20426, in accordance wit the Sections 385.214 and 385.211 of the Commission's Rules and Regulations. All such motions or protests must be filed as provided in Section 154.210 of the Commission's Regulations. Protests will be considered by the Commission in determining the appropriate action to be taken, but will not serve to make protestants parties to the proceedings. Any person wishing to become a party must file a motion to intervene. Copies of this filing are on file with the Commission and are available for public inspection in the public Reference Room.

Linwood A. Watson, Jr.,

Acting Secretary.

[FR Doc. 98–19186 Filed 7–17–98; 8:45 am]

BILLING CODE 6717–01–M

DEPARTMENT OF ENERGY

Federal Energy Regulatory Commission

[Docket No. GT98–81–000]

Granite State Gas Transmission, Inc.; Notice of Refund Report

July 14, 1998.

Take notice that on July 8, 1998, Granite State Gas Transmission, Inc. (Granite State) tendered for filing with the Commission a report of Gas Research Institute (GRI) refunds made to its customers.

Granite State states that it received a total refund of $193,008.00 from GRI for over collection during 1997. Granite State says that it allocated the refund proportionately to its firm customers, Bay State Gas Company and Northern Utilities and made the refunds to them on July 8, 1998 by credits to the customers accounts.

Granite State also states that its report has been served on its customers and on the regulatory agencies of the states of Maine, Massachusetts and New Hampshire.

Any person desiring to be heard or to protest this filing should file a motion to intervene or a protest with the Federal Energy Regulatory Commission, 888 First Street, N.E., Washington D.C. 20426, in accordance wit the Sections 385.214 and 385.211 of the Commission's Rules and Regulations. All such motions or protests must be filed on or before July 21, 1998. Protests will be considered by the Commission in determining the appropriate action to be taken, but will not serve to make protestants parties to the proceedings. Any person wishing to become a party must file a motion to intervene. Copies of this filing are on file with the Commission and are available for public inspection in the public Reference Room.

Linwood A. Watson, Jr.,

Acting Secretary.

[FR Doc. 98–19189 Filed 7–17–98; 8:45 am]

BILLING CODE 6717–01–M

DEPARTMENT OF ENERGY

Federal Energy Regulatory Commission

[Docket Nos. RP98–155–003 and TM98–4–4–001]

Granite State Gas Transmission, Inc.; Notice of Compliance Tariff Filing

July 14, 1998.

Take notice that on July 8, 1998, Grante State Gas Transmission, Inc. (Granite State) tendered for filing as part of its FERC Gas Tariff, Third Revised Volume No. 1, Second Substitute First Revised Sheet No. 334, for effectiveness on July 1, 1998.

According to Granite State, the revised tariff sheet is submitted in compliance with a provision in the Commission's Letter Order issued June 25, 1998 which, among other things, directed Granite State to insert certain clarifying language in its Power Cost Adjustment Tariff provisions.

Granite State says that copies of its filing were served upon its firm and interruptible customers and the regulatory agencies of the states of Maine, Massachusetts and New Hampshire.

Any person desiring to protest this filing should file a protest with the Federal Energy Regulatory Commission, 888 First Street, N.E., Washington, D.C. 20426, in accordance with Section 385.211 of the Commission's Rules and Regulations. All such protests must be filed as provided in Section 154.210 of the Commission's Regulations. Protests will be considered by the Commission in determining the appropriate action to be taken, but will not serve to make protestants parties to the proceedings. Copies of this filing are on file with the Commission and are available for public inspection in the Public Reference Roome.

Linwood A. Wason, Jr.,

Acting Secretary.

[FR Doc. 98–19197 Filed 7–17–98; 8:45 am]

BILLING CODE 6717–01–M

DEPARTMENT OF ENERGY

Federal Energy Regulatory Commission

[Docket No. RP98–348–000]

Gulf States Transmission Corporation; Notice of Proposed Changes in FERC Gas Tariff

July 14, 1998.

Take notice that on July 10, 1998, Gulf States Transmission Corporation (Gulf States) tendered for filing as part of its

FERC Gas Tariff, Original Volume No. 1, the following tariff sheets, with an effective date of August 1, 1998:

Second Revised Sheet No. 58G

Gulf States states that the filing is being made pursuant to Subpart C of Part 154 of the Commission's Regulations and in compliance with Order No. 587–G issued April 16, 1998 in Docket No. RM96–1–007.

Gulf States states that the purpose of this filing is to implement Version 1.2 of the Gas Industry Standards Board (GISB) standards accepted by the Commission in Order No. 587–G. The tendered tariff sheet is proposed to be made effective August 1, 1998 and Gulf States requests all waivers of the Commission's regulations that may be necessary to allow the filing to become effective on August 1, 1998.

Any person desiring to be heard or to protest this filing should file a motion to intervene or a protest with the Federal Energy Regulatory Commission, 888 First Street, N.E., Washington, D.C. 20426, in accordance with Sections 385.214 and 385.211 of the Commission's Rules and Regulations. All such motions or protests must be filed as provided in Section 154.210 of the Commission's Rules and Regulations. Protests will be considered by the Commission in determining the appropriate action to be taken, but will not serve to make protestants parties to the proceedings. Any person wishing to become a party must file a motion to intervene. Copies of this filing are on file with the Commission and are available for public inspection in the Public Reference Room.

Linwood A. Watson, Jr.,

Acting Secretary.

[FR Doc. 98–19201 Filed 7–17–98; 8:45 am]

BILLING CODE 6717–01–M

DEPARTMENT OF ENERGY

Federal Energy Regulatory Commission

[Docket No. RP98–349–000]

Midwestern Gas Transmission Company; Notice of Proposed Changes in FERC Gas Tariff

July 14, 1998.

Take notice that on July 10, 1998, Midwestern Gas Transmission Company (Midwestern) tendered for filing as part of its FERC Gas Tariff, Second Revised Volume No. 1, the tariff sheets listed on Appendix A to the filing, with an effective date of August 1, 1998.

Midwestern states that the revised tariff sheets are being filed in compliance with the Commission's Order No. 587–G issued on April 16, 1998. Standards for Business Practices of Interstate Natural Gas Pipelines, 83 FERC ¶ 61,029 (1998). Consistent with Order No. 587–G, Midwestern proposes an effective date of August 1, 1998. Midwestern requests a waiver of Section 154.207 to permit an August 1, 1998 effective date.

Midwestern states that the revised tariff sheets incorporate by reference Version 1.2 of the GISB standards.

Midwestern states that copies of the filing have been mailed to each of the parties that have intervened in this proceeding.

Any person desiring to be heard or to protest this filing should file a motion to intervene or a protest with the Federal Energy Regulatory Commission, 888 First Street, N.E., Washington, D.C. 20426, in accordance with Sections 385.214 and 385.211 of the Commission's Rules and Regulations. All such motions or protests must be filed as provided in Section 154.210 of the Commission's Regulations. Protests will be considered by the Commission in determining the appropriate action to be taken, but will not serve to make protestants parties to the proceedings. Any person wishing to become a party must file a motion to intervene. Copies of this filing are on file with the Commission and are available for public inspection in the Public Reference Room.

Linwood A. Watson, Jr.,

Acting Secretary.

[FR Doc. 98–19187 Filed 7–17–98; 8:45 am]

BILLING CODE 6717–01–M

DEPARTMENT OF ENERGY

Federal Energy Regulatory Commission

[Docket No. ER98–3690–000]

New England Power Pool; Notice of Filing

July 14, 1998.

Take notice that on July 10, 1998, the New England Power Pool Executive Committee filed for acceptance a signature page to the New England Power Pool (NEPOOL) Agreement dated September 1, 1971, as amended, signed by USGen New England, Inc., (USGenNE). The NEPOOL Agreement has been designated NEPOOL FPC No. 2.

The Executive Committee states that the Commission's acceptance of USGenNE's signature page would permit NEPOOL to expand its membership to include USGenNE. NEPOOL further states that the filed signature page does not change the NEPOOL Agreement in any manner, other than to make USGenNE's participation in NEPOOL. NEPOOL requests an effective date for the commencement of USGenNE's participation in NEPOOL as of the date of USGenNE's acquisition of the generating assets currently owned by New England Power Company, which is anticipated to occur August 1, 1998 at the earliest.

Any person desiring to be heard or to protest said filing should file a motion to intervene or protest with the Federal Energy Regulatory Commission, 888 First Street, N.E., Washington, D.C. 20426, in accordance with Rules 211 and 214 of the Commission's Rules of Practice and Procedure (18 CFR 385.211 and 18 CFR 385.214). All such motions and protests should be filed on or before July 24, 1998. Protests will be considered by the Commission to determine the appropriate action to be taken, but will not serve to make protestants parties to the proceedings. Any person wishing to become a party must file a motion to intervene. Copies of this filing are on file with the Commission and are available for public inspection.

Linwood A. Watson, Jr.,

Acting Secretary.

[FR Doc. 98–19232 Filed 7–17–98; 8:45 am]

BILLING CODE 6717–01–M

DEPARTMENT OF ENERGY

Federal Energy Regulatory Commission

[Docket No. CP98–651–000]

NorAm Gas Transmission Company; Notice of Request Under Blanket Authorization

July 14, 1998.

Take notice that on July 2, 1998, NorAm Gas Transmission Company (NorAm), 1111 Louisiana, Houston, Texas 77002, filed in Docket No. CP98–651–000 a request pursuant to Sections 157.205, 157.212, and 157.216 of the Commission's Regulations under the Natural Gas Act (18 CFR 157.205, 157.212, and 157.216) for authorization to upgrade facilities in Oklahoma. NorAm makes such request under its blanket certificate issued in Docket Nos. CP82–384–000 and CP82–384–001 pursuant to Section 7 of the Natural Gas Act, all as more fully set forth in the request on file with the Commission and open to public inspection.

Specifically, NorAm seeks authority to (1) operate under Subpart G of Part

284 of the Commission's Regulations, measurement facilities constructed under Section 311 of the Natural Gas Policy Act and Subpart B, Part 284 of the Commission's Regulations; and (2) abandon obsolete measurement facilities and install upgraded delivery facilities at Delhi, Oklahoma to continue service to Arkla, a division of NorAm Energy Corporation (Arkla).

NorAm states that pursuant to Section 311, that it upgraded an existing delivery tap located on NorAm's Line 11–2 at pipeline station no. 355+41 in Comanche County, Oklahoma. It is stated that Arkla requested upgraded service and increased deliveries at that location, and that NorAm accordingly installed a Roots rotary 16M meter and two 1-inch Fisher regulators at an estimated cost of $600. (It is averred that Arkla fabricated the new meter and regulators and donated those facilities to NorAm at no cost.) NorAm states that it will own and operate those facilities and seeks authority to operate those facilities under Subpart G. NorAm estimates that up to 69,370 dekatherms (Dt) will be delivered to that tap annually and 651 Dt on a peak day.

At Delhi, Oklahoma, NorAm proposes to abandon and junk an American AL 800 meter, one 1-inch Fisher 630 regulator and one 1-inch Reliance 1800 regulator located at an existing town border station on NorAm's Line 8 at pipeline station no. 400+62 in Beckham County, Oklahoma. NorAm states that it will install a Roots 11M positive displacement meter and one 1-inch 399 Fisher regulator at an estimated cost of $600. (It is indicated that Arkla will fabricate the new meter and regulator and donate those facilities to NorAm at no cost.) The estimated volumes to be delivered to that tap are approximately 10,409 Dt annually and 492 Dt on a peak day.

NorAm states that the volumes in this request will be within Arkla's certificated entitlements, and that NorAm's tariff does not prohibit the addition of new delivery points. It is further stated that NorAm has sufficient capacity to accomplish the deliveries without detriment or disadvantage to its other customers.

Any person or the Commission's staff may, within 45 days after issuance of the instant notice by the Commission, file pursuant to Rule 214 of the Commission's Procedural Rules (18 CFR 385.214) a motion to intervene or notice of intervention and pursuant to Section 157.205 of the Regulations under the Natural Gas Act (18 CFR 157.205) a protest to the request. If no protest is filed within the time allowed therefor, the proposed activity shall be deemed to be authorized effective the day after the time allowed for filing a protest. If a protest is filed and not withdrawn within 30 days after the time allowed for filing a protest, the instant request shall be treated as an application for authorization pursuant to Section 7 of the Natural Gas Act.

Linwood A. Watson, Jr.,

Acting Secretary.

[FR Doc. 98–19199 Filed 7–17–98; 8:45 am]

BILLING CODE 6717–01–M

DEPARTMENT OF ENERGY

Federal Energy Regulatory Commission

[Docket No. RP98–345–000]

Northern Border Pipeline Company; Notice of Proposed Changes in FERC Gas Tariff

July 14, 1998.

Take notice that on July 8, 1998, Northern Border Pipeline Company (Northern Border) tendered for filing to become part of its FERC Gas Tariff, First Revised Volume No. 1, the following tariff sheets to become effective November 1, 1998. In order to allow time for computer system development, Northern Border requests approval of the following tariff sheets by September 1, 1998.

Second Revised Sheet Number 100
Second Revised Sheet Number 105
Second Revised Sheet Number 112
First Revised Sheet Number 125
First Revised Sheet Number 126
First Revised Sheet Number 133
First Revised Sheet Number 134
First Revised Sheet Number 135
Second Revised Sheet Number 150
Original Sheet Number 208A
Second Revised Sheet Number 234
Second Revised Sheet Number 235
Second Revised Sheet Number 237
Second Revised Sheet Number 238
Third Revised Sheet Number 239
Second Revised Sheet Number 240
Third Revised Sheet Number 241
Third Revised Sheet Number 249
Third Revised Sheet Number 250
First Revised Sheet Number 250A
Original Sheet Number 250B
Third Revised Sheet Number 251
Third Revised Sheet Number 253
Third Revised Sheet Number 255
Third Revised Sheet Number 256
Third Revised Sheet Number 257
Second Revised Sheet Number 258
Second Revised Sheet Number 260
First Revised Sheet Number 400
First Revised Sheet Number 401
First Revised Sheet Number 419
Original Sheet Number 419A
First Revised Sheet Number 420

Northern Border's states that its proposed tariff changes will identify and allocate separately the capacity on its system that results from ambient conditions and the capacity that results from unnominated firm. Firm shippers will receive a daily entitlement to use the ambient related capacity (Daily Ambient Capacity), which is projected to be available on a Gas Day above the shipper's contracted firm Maximum Receipt Quantity. Under this proposal to allocate Daily Ambient Capacity as a firm shipper entitlement, Northern Border, in compliance with Order No. 587–G, will be able to administer bumping more efficiently and with less disruption to the marketplace because reduced interruptible volumes will be subject to bumping by firm shippers.

Northern Border states that copies of this filing have been sent to all of Northern Border's affected shippers.

Any person desiring to be heard or to protest this filing should file a motion to intervene or a protest with the Federal Energy Regulatory Commission, 888 First Street, NE, Washington, DC 20426, in accordance with Sections 385.214 and 385.211 of the Commission's Rules and Regulations. All such motions or protests must be filed as provided in Section 154.210 of the Commission's Regulations. Protests will be considered by the Commission in determining the appropriate action to be taken, but will not serve to make protestants parties to the proceedings. Any person wishing to become a party must file a motion to intervene. Copies of this filing are on file with the Commission and are available for public inspection in the Public Reference Room.

Linwood A. Watson, Jr.,

Acting Secretary.

[FR Doc. 98–19195 Filed 7–17–98; 8:45 am]

BILLING CODE 6717–01–M

DEPARTMENT OF ENERGY

Federal Energy Regulatory Commission

[Docket No. CP98–649–000]

Northern Natural Gas Company; Notice of Application

July 14, 1998.

Take notice that on July 1, 1998, Northern Natural Gas Company (Northern), P.O. Box 3330, Omaha, NE 68103–0330, filed an application pursuant to Section 7(b) of the Natural Gas Act for an order permitting the abandonment by sale to Conoco Inc. (Conoco) certain of its Permian Area facilities, specifically the Tejas and Champlin facilities, located in Glasscock, Irion, Reagan, Sterling, and

Tom Green Counties, Texas, and certain services rendered thereby. Northern also requests permission and approval to abandon in place the Irion Co. #3 lateral located in Irion County, all as more fully set forth in the application which is on file with the Commission and open to public inspection.

Northern proposes to convey to Conoco approximately 63 miles of pipeline with diameters ranging between 6 and 8 inches. Northern states that the subject facilities were authorized as gas supply facilities pursuant to budget-type certificate authority granted in Docket Nos. CP79–2, CP80–148, and CP80–546. Northern contends that the subject facilities are currently under-utilized by Northern's shippers, since its shippers have generally elected to source their markets from other gas supply receipt points on Northern's pipeline system. Northern also notes that the production attached to the subject facilities is split connected and has not flowed into the system during the past 12 months or longer. Northern states that the Tejas facilities have an estimated capacity of 17,000 Mcf per day (with utilization on a total annual average basis of less than 1,650 Mcf per day of throughput). Currently, Northern states that there are no shippers which hold firm capacity on the Tejas facilities and only one interruptible shipper which transports gas on the subject facilities. Northern notes that the Champlin facilities have an estimated capacity of 14,000 Mcf per day and there are no shippers which hold firm capacity nor has there been any transportation service provided on these facilities during the past 12 months or longer. Northern asserts that Conoco will be filing a Petition for a Declaratory Order seeking a determination that the subject facilities are gathering facilities exempt from the Commission's jurisdiction under Section 1(b). Northern notes that the facilities will be conveyed for a purchase price of $1,475,000.

Any person desiring to be heard or to make a protest with reference to said application should, on or before August 4, 1998, file with the Federal Energy Regulatory Commission (888 First Street, NE., Washington, DC 20426) a motion to intervene or a protest in accordance with the requirements of the Commission's Rules of Practice and Procedure (18 CFR 385.214 or 385.211) and the Regulations under the Natural Gas Act (18 CFR 157.10). All protests filed with the Commission will be considered by it in determining the appropriate action to be taken, but will not serve to make the protestants parties to the proceeding. Any person wishing to become a party to a proceeding or to participate as a party in any hearing therein must file a motion to intervene in accordance with the Commission's Rules.

Take further notice that, pursuant to the authority contained in and subject to the jurisdiction conferred upon the Federal Energy Regulatory Commission by Sections 7 and 15 of the Natural Gas Act and Commission's Rules of Practice and Procedure, a hearing will be held without further notice before the Commission is filed within the time required herein, if the Commission on its own review of the matter finds that permission and approval for the proposed abandonment are required by the public convenience and necessity. If a motion for leave to intervene is timely filed, or if the Commission on its own motion believes that a formal hearing is required, further notice of such hearing will be duly given.

Under the procedure herein provided for, unless otherwise advised, it will be unnecessary for Applicant to appear or be represented at the hearing.

Linwood A. Watson, Jr.,

Acting Secretary.

[FR Doc. 98–19184 Filed 7–17–98; 8:45 am]

BILLING CODE 6717–01–M

DEPARTMENT OF ENERGY

Federal Energy Regulatory Commission

[Docket No. CP98–656–000]

Northwest Pipeline Corporation; Notice of Request Under Blanket Authorization

July 14, 1998.

Take notice that on July 6, 1998, Northwest Pipeline Corporation (Northwest), 295 Chipeta Way, Salt Lake City, Utah 84108, filed in Docket No. CP98–656–000 a request pursuant to Sections 157.205, 157.216 of the Commission's Regulations under the Natural Gas Act (18 CFR 157.205 and 157.216) for authorization to modify approval previously received in Docket No. CP97–657–000 to abandon its Issaquah Lateral line, located in King County, Washington, by sale to Puget Sound Energy, Inc. (Puget), under Northwest's blanket certificate issued in Docket No. CP82–433–000 pursuant to Section 7 of the Natural Gas Act, all as more fully set forth in the request that is on file with the Commission and open to public inspection.

Northwest now proposes to abandon the first 407 feet of the 6-inch Issaquah Lateral line by removal, and to abandon the remaining approximately 1.3 mile segment of the lateral by sale to Puget. Northwest states that the pipeline and appurtenances that are removed from the lateral will be scrapped, and that the remaining portion of the lateral will be capped and transferred to Puget.

Northwest states that the estimated cost of removing the 407-foot section of the Issaquah Lateral and appurtenant facilities is estimated to be approximately $5,750, and that the remaining 1.3 miles of the lateral will be sold in place to Puget for $77,005, the approximate net book value.

Any person or the Commission's staff may, within 45 days after issuance of the instant notice by the Commission, file pursuant to Rule 214 of the Commission's Procedural Rules (18 CFR 385.214) a motion to intervene or notice of intervention and pursuant to Section 157.205 of the Regulations under the Natural Gas Act (18 CFR 157.205) a protest to the request. If no protest is filed within the time allowed therefor, the proposed activity shall be deemed to be authorized effective the day after the time allowed for filing a protest. If a protest is filed and not withdrawn within 30 days after the time allowed for filing a protest, the instant request shall be treated as an application for authorization pursuant to Section 7 of the Natural Gas Act.

Linwood A. Watson, Jr.,

Acting Secretary.

[FR Doc. 98–19185 Filed 7–17–98; 8:45 am]

BILLING CODE 6717–01–M

DEPARTMENT OF ENERGY

Federal Energy Regulatory Commission

[Docket No. RP98–131–007, GT98–23–001 and RP98–184–001]

Overthrust Pipeline Company; Notice of Tariff Filing

July 14, 1998.

Take notice that on July 10, 1998, Overthrust Pipeline Company tendered for filing as part of its FERC Gas Tariff, First Revised Volume No. 1–A the following revised tariff sheets, to be effective as shown below:

Substitute revised tariff sheets	Effective date
Substitute Third Revised Sheet No. 1	November 1, 1997.
Substitute Fourth Revised Sheet No. 1	April 1, 1998.
Substitute Fifth Revised Sheet No. 30	November 1, 1997.
Substitute Sixth Revised Sheet No. 30	April 1, 1998.
Substitute First Revised Sheet No. 34A	November 1, 1997.
Substitute Second Revised Sheet No. 34A	May 8, 1998.

Overthrust states that the filing is being made in response to the Commission's June 22, 1998 letter in Docket No. RP97–301–002.

Overthrust states that this tariff filing (1) incorporates into certain tariff sheets filed by Overthrust in Docket Nos. RP97–131–005, GT98–23–000 and RP98–184–000 tariff revisions that were approved by the Commission's June 22 letter order, and (2) corrects the pagination of tariff sheets tendered with this filing that became effective between November 1, 1997, and May 8, 1998.

Overthrust states further that a copy of this filing has been served upon its customers, the Public Service Commission of Utah and the Public Service Commission of Wyoming.

Any person desiring to protest this filing should be a protest with the Federal Energy Regulatory Commission, 888 First Street, N.E., Washington, D.C. 20426, in accordance with Section 385.211 of the Commission's Rules and Regulations. All such protests must be filed as provided in Section 154.210 of the Commission's Regulations. Protests will be considered by the Commission in determining the appropriate action to be taken, but will not serve to make protestants parties to the proceedings. Copies of this filing are on file with the Commission and are available for public inspection in the Public Reference Room.

Linwood A. Watson, Jr.,

Acting Secretary.

[FR Doc. 98–19192 Filed 7–17–98; 8:45 am]

BILLING CODE 6717–01–M

DEPARTMENT OF ENERGY

Federal Energy Regulatory Commission

[Docket No. ER98–3487–000]

PJM Interconnection, L.L.C.; Notice of Filing

July 14, 1998.

Take notice that on June 24, 1998, the PJM Interconnection, L.L.C. (PJM), filed on behalf of the Members of the LLC, membership application of Statoil Energy Services, Inc. PJM requests an effective date on the date after this Notice of Filing is received by FERC.

Any person desiring to be heard or to protest said filing should file a motion to intervene or protest with the Federal Energy Regulatory Commission, 888 First Street, N.E., Washington, D.C. 20426, in accordance with Rules 211 and 214 of the Commission's Rules of Practice and Procedure (18 CFR 385.211 and 18 CFR 385.214). All such motions and protests should be filed on or before July 24, 1998. Protests will be considered by the Commission to determine the appropriate action to be taken, but will not serve to make protestants parties to the proceedings. Any person wishing to become a party must file a motion to intervene. Copies of this filing are on file with the Commission and are available for public inspection.

Linwood A. Watson, Jr.,

Acting Secretary.

[FR Doc. 98–19230 Filed 7–17–98; 8:45 am]

BILLING CODE 6717–01–M

DEPARTMENT OF ENERGY

Federal Energy Regulatory Commission

[Docket No. ER98–3636–000]

Public Service Electric and Gas Company; Notice of Filing

July 9, 1998.

Take notice that on July 6, 1998, Public Service Electric and Gas Company (PSE&G), of Newark, New Jersey tendered for filing an agreement for the sale of capacity and energy to Commonwealth Edison Company (ComEd), pursuant to the PSE&G Wholesale Power Market Based Sales Tariff, presently on file with the Commission.

PSE&G further requests waiver of the Commission's Regulations such that the agreement can be made effective as of June 8, 1998.

Copies of the filing have been served upon ComEd and the New Jersey Board of Public Utilities.

Any person desiring to be heard or to protest said filing should file a motion to intervene or protest with the Federal Energy Regulatory Commission, 888 First Street, N.E., Washington, D.C. 20426, in accordance with Rules 211 and 214 of the Commissions Rules of Practice and Procedure (18 CFR 385.211 and 18 CFR 385.214). All such motions and protests should be filed on or before July 24, 1998. Protests will be considered by the Commission to determine the appropriate action to be taken, but will not serve to make protestants parties to the proceedings. Any person wishing to become a party must file a motion to intervene. Copies of this filing are on file with the Commission and are available for public inspection.

David P. Boergers,

Acting Secretary.

[FR Doc. 98–19229 Filed 7–17–98; 8:45 am]

BILLING CODE 6717–01–M

DEPARTMENT OF ENERGY

Federal Energy Regulatory Commission

[Docket No. TM98–2–8–001]

South Georgia Natural Gas Company; Notice of Filing

July 14, 1998.

Take notice that on July 9, 1998, South Georgia Natural Gas Company (South Georgia) tendered for filing certain additional information concerning its Fuel Retention Percentage (FRP).

South Georgia states that its filing is in compliance with the Commission's June 24, 1998 order directing South Georgia to file supplemental data to explain the increase in its FRP as proposed by South Georgia in its May 29, 1998, filing in the instant proceeding.

South Georgia states that copies of the filing will be served on all parties designated on the official service list compiled by the Secretary in these proceedings.

Any person desiring to protest this filing should file a protest with the Federal Energy Regulatory Commission, 888 First Street, N.E., Washington, D.C. 20426, in accordance with Section 385.211 of the Commission's Rules and Regulations. All such protests must be filed on or before July 21, 1998. Protests will be considered by the Commission in determining the appropriate action to

be taken, but will not serve to make protestants parties to the proceedings. Copies of this filing are on file with the Commission and are available for public inspection in the Public Reference Room.

Linwood A. Watson, Jr.,

Acting Secretary.

[FR Doc. 98–19188 Filed 7–17–98; 8:45 am]

BILLING CODE 6717–01–M

DEPARTMENT OF ENERGY

Federal Energy Regulatory Commission

[Docket No. RP98–351–000]

Tennessee Gas Pipeline Company; Notice of Proposed Changes in FERC Gas Tariff

July 14, 1998.

Take notice that on July 10, 1998, Tennessee Gas Pipeline Company (Tennessee), tendered for filing as part of its FERC Gas Tariff, Fifth Revised Volume No. 1, the tariff sheets listed on Appendix A to the filing, with an effective date of August 1, 1998.

Tennessee states that the revised tariff sheets are being filed in compliance with the Commission's Order No. 587–G issued on April 16, 1998. Standards for Business Practices of Interstate Natural Gas Pipelines, 83 FERC ¶ 61,029 (1998). Consistent with Order No. 587–G, Tennessee proposes an effective date of August 1, 1998. Tennessee requests a waiver of Section 154.207 to permit an August 1, 1998 effective date.

Tennessee states that the revised tariff sheets incorporate by reference Version 1.2 of the GISB standards.

Tennessee states that copies of the filing have been mailed to each of the parties that have intervened in this proceeding.

Any person desiring to be heard or to protest this filing should file a motion to intervene or a protest with the Federal Energy Regulatory Commission, 888 First Street, N.E., Washington, D.C. 20426, in accordance with Sections 385.214 and 385.211 of the Commission's Rules and Regulations. All such motions or protests must be filed as provided in Section 154.210 of the Commission's Regulations. Protests will be considered by the Commission in determining the appropriate action to be taken, but will not serve to make protestants parties to the proceedings. Any person wishing to become a party must file a motion to intervene. Copies of this filing are on file with the Commission and are available for public inspection in the Public Reference Room.

Linwood A. Watson, Jr.,

Acting Secretary.

[FR Doc. 98–19203 Filed 7–17–98; 8:45 am]

BILLING CODE 6717–01–M

DEPARTMENT OF ENERGY

Federal Energy Regulatory Commission

[Docket No. CP98–653–000]

Tuscarora Gas Transmission Company; Notice of Request Under Blanket Authorization

July 14, 1998.

Take notice that on July 2, 1998, Tuscarora Gas Transmission Company (Applicant), 1575 Delucchi Lane, Suite 225, Post Office Box 30057, Reno, Nevada 89520–3057, filed in Docket No. CP98–653–000 a request pursuant to Section 157.205 and 157.211 of the Commission's Regulations under the Natural Gas Act (18 CFR 157.205 and 157.211) for approval to construct and operate a tap, meter station and appurtenant facilities for the transportation of natural gas to the HL Power Company (HL Power) in Lassen County, California Under Applicant's blanket certificate issued in Docket No. CP93–685–000 *et al.*, pursuant to Section 7(c) of the Natural Gas Act (NGA), all as more fully set forth in the request which is on file with the Commission and open to public inspection.

Applicant proposes to transport volumes, initially up to 2,400 Dekatherms per Day on interruptible basis, pursuant to the rates, terms, and conditions of Applicant's open access tariff. Applicant asserts that the construction of these facilities will enable HL Power to supplement its current fuel supply with natural gas. Applicant further asserts that none of its customers will be adversely affected by the certification of approximately $35,000. Applicant states that it will pay for the construction and acquisition of the facilities proposed herein. It is also asserted that the proposed facilities will have no effect on Applicant's ability to deliver natural gas to its existing customers at pressures in conformity with existing contracts and tariffs.

Any person or the Commission's Staff may, within 45 days of the issuance of the instant notice by the Commission, file pursuant to Rule 214 of the Commission's Rules of Practice and Procedure (18 CFR 385.214), a motion to intervene and pursuant to Section 157.205 of the regulations under the Natural Gas Act (18 CFR 157.205), a protest to the request. If no protest is filed within the time allowed therefor, the proposed activities shall be deemed to be authorized effective the day after the time allowed for filing a protest. If a protest is filed and not withdrawn 30 days after the time allowed for filing a protest, the instant request shall be treated as an application for authorization pursuant to Section 7 of the Natural Gas Act.

Linwood A. Watson, Jr.,

Acting Secretary.

[FR Doc. 98–19190 Filed 7–17–98; 8:45 am]

BILLING CODE 6717–01–M

DEPARTMENT OF ENERGY

Federal Energy Regulatory Commission

[Docket Nos. RP97–346–000, TM97–3–24–000, and RP98–123–000]

Equitrans, L.P.; Notice Rescheduling Informal Settlement Conference

July 14, 1998.

Take notice that the information settlement conference scheduled to convene in this proceeding on Wednesday, July 15, 1998, at 10:00 a.m., has been canceled and rescheduled for Wednesday, July 22, 1998, at 10:00 a.m., at the offices of the Federal Energy Regulatory Commission, 888 First Street, N.E., Washington, DC, 20426, for the purpose of reviewing the draft settlement documents in the above-referenced dockets.

Any party, as defined by 18 CFR 385.102(c), or any participant, as defined by 18 CFR 385.102(b), is invited to attend. Persons wishing to become a party must move to intervene and receive intervenor status pursuant to the Commissions' regulations (18 CFR 385.214).

For additional information, please contact Irene E. Szopo at (202) 208–1602 or Robert A. Young at (202) 208–5705.

Linwood A. Watson, Jr.,

Acting Secretary.

[FR Doc. 98–19200 Filed 7–17–98; 8:45 am]

BILLING CODE 6717–01–M

DEPARTMENT OF ENERGY

Federal Energy Regulatory Commission

[Project No. 2077 New Hampshire and Vermont]

New England Power Company; Notice of Proposed Restricted Service List for a Programmatic Agreement for Managing Properties Included in or Eligible for Inclusion in the National Register of Historic Places

July 14, 1998.

Rule 2010 of the Federal Energy Regulatory Commission's (Commission) Rules of Practice and Procedure provides that, to eliminate unnecessary expense or improve administrative efficiency, the Secretary may establish a Restricted Service List for a particular phase or issue in a proceeding.[1] The Restricted Service List should contain the names of persons on the service list who, in the judgment of the decisional authority establishing the list, are active participants with respect to the phase or issue in the proceeding for which the list is established.

The Commission staff is consulting with the New Hampshire and Vermont State Historic Preservation Officers (hereinafter, ''SHPOs'') and the Advisory Council on Historic Preservation (hereinafter, ''Advisory Council'') pursuant to the Advisory Council's regulations, 36 CFR Part 800, implementing Section 106 of the National Historic Preservation Act, as amended, (16 U.S.C. Section 470 f), to prepare a Programmatic Agreement for managing properties included in, or eligible for inclusion in, the National Register of Historic Places at Project No. 2077.

The Programmatic Agreement, when executed by the Commission, the SHPOs, and the Advisory Council, would satisfy the Commission's Section 106 responsibilities for all individual undertakings carried out in accordance with the license until the license expires or is terminated (36 CFR 800.13[e]). The Commission's responsibilities pursuant to Section 106 for the above project would be fulfilled through the Programmatic Agreement, which the Commission proposes to draft in consultation with certain parties listed below. The executed Programmatic Agreement would be incorporated into any Order issuing a license.

New England Power Company, as prospective licensee for Project No. 2077, is invited to participate in consultations to develop the Programmatic Agreement and to sign as a concurring party to the Programmatic Agreement.

For purposes of commenting on the Programmatic Agreement, we propose to restrict the service list for Project No. 2077 as follows:

Dr. Laura Henley Dean, Advisory Council on Historic Preservation, The Old Post Office Building, Suite 803, 1100 Pennsylvania Avenue, NW, Washington, DC 20004

Alec Giffen, Land & Water Associates, 9 Union Street, Hallowell, ME 04347

Cleve Kapala, New England Power Company, 4 Park Street, Concord, NH 03301

James MacCartney, NH Department of Environmental Services, 6 Hazen Drive, Concord, NH 03302–0095

Nancy Muller, State Historic Preservation Officer, NH Division of Historic Resources, Box 2043, Concord, NH 03302

Giovanna Peebles, Division of Historic Preservation, 135 State Street, Drawer 33, Montpelier, VT 05633–1201

John Ragonese, New England Power Company, 4 Park Street, Concord, NH 03301

Emily Wadhams, State Historic Preservation Officer, National Life Building, Drawer 20, Montpelier, VT 05602–0501

Kevin Young, Louis Berger & Associates, Inc., 75 Second Avenue, Suite 700, Needham, MA 02194–2800

Any person on the official service list for the above-captioned proceedings may request inclusion on the Restricted Service List, or may request that a Restricted Service List not be established, by filing a motion to that effect within 15 days of this notice date.

An original and 8 copies of any such motion must be filed with the Secretary of the Commission (888 First Street, NE, Washington, DC 20426) and must be served on each person whose name appears on the official service list. If no such motions are filed, the Restricted Service List will be effective at the end of the 15 day period. Otherwise, a further notice will be issued ruling on the motion.

Linwood A. Watson, Jr.,

Acting Secretary.

[FR Doc. 98–19198 Filed 7–17–98; 8:45 am]

BILLING CODE 6717–01–M

[1] 18 CFR 385.2010.

ENVIRONMENTAL PROTECTION AGENCY

[FRL–6126–3]

Toxic Chemicals; TSCA Inventory Corrections; Submission of ICR No. 1741.02 to OMB; Agency Information Collection Activities

AGENCY: Environmental Protection Agency (EPA).

ACTION: Notice of submission to OMB.

SUMMARY: In compliance with the Paperwork Reduction Act (44 U.S.C. 3501 *et seq.*), this document announces that the Information Collection Request (ICR) entitled: Correction of Misreported Chemical Substances on the TSCA Inventory (EPA ICR No. 1741.02; OMB Control No. 2070–0145) has been forwarded to the Office of Management and Budget (OMB) for review and approval pursuant to the OMB procedures in 5 CFR 1320.12. The ICR, which is abstracted below, describes the nature of the information collection and its estimated cost and burden.

The Agency is requesting that OMB renew for 3 years the existing approval for this ICR, which is scheduled to expire on August 31, 1998. A **Federal Register** document announcing the Agency's intent to seek the renewal of this ICR and the 60-day public comment opportunity, requesting comments on the request and the contents of the ICR, was issued on March 18, 1998 (63 FR 13243). EPA did not receive any comments on this ICR during the comment period.

DATES: Additional comments may be submitted on or before August 19, 1998.

FOR FURTHER INFORMATION CONTACT: Sandy Farmer at EPA by phone on (202) 260–2740, by e-mail: ''farmer.sandy@epamail.epa.gov,'' or download off the Internet at http://www.epa.gov/icr/icr.htm and refer to EPA ICR No. 1741.02.

ADDRESSES: Send comments, referencing EPA ICR No. 1741.02 and OMB Control No. 2070–0145, to the following addresses:

Ms. Sandy Farmer, U.S. Environmental Protection Agency, Regulatory Information Division (Mailcode: 2137), 401 M Street, SW., Washington, DC 20460;

and

Office of Information and Regulatory Affairs, Office of Management and Budget (OMB), Attention: Desk Officer for EPA, 725 17th Street, NW., Washington, DC 20503.

SUPPLEMENTARY INFORMATION: *Review Requested:* This is a request to renew a currently approved information collection pursuant to 5 CFR 1320.12.

ICR Numbers: EPA ICR No. 1741.02; OMB Control No. 2070–0145.

Current Expiration Date: Current OMB approval expires on August 31, 1998.

Title: Correction of Misreported Chemical Substances on the TSCA Inventory

Abstract: Section 8(b) of the Toxic Substances Control Act (TSCA) requires EPA to compile and keep current an Inventory of Chemical Substances in Commerce, which is a listing of chemical substances manufactured, imported, and processed for commercial purposes in the United States. The purpose of the Inventory is to define, for the purpose of TSCA, what chemical substances exist in U.S. commerce. Since the Inventory thereby performs a regulatory function by distinguishing between existing chemicals and new chemicals, which TSCA regulates in different ways, it is imperative that the Inventory be accurate.

However, from time to time, EPA or respondents discover that substances have been incorrectly described by reporting companies. Reported substances have been unintentionally misidentified as a result of simple typographical errors, the misidentification of substances, or the lack of sufficient technical or analytical capabilities to characterize fully the exact chemical substances. EPA has developed guidelines (45 FR 50544, July 29, 1980) under which incorrectly described substances listed in the Inventory can be corrected.

This information collection request pertains to the use of the TSCA Chemical Substance Inventory Reporting Form C (EPA Form 7710–3C), which is used by the chemical industry in submitting requests to EPA to correct misreported chemical identities of substances listed on the Inventory. The correction mechanism ensures the accuracy of the Inventory without imposing an unreasonable burden on the chemical industry. Without the Inventory correction mechanism, a company that submitted incorrect information would have to file a premanufacture notification (PMN) under TSCA section 5 to place the correct chemical substance on the Inventory whenever the previously reported substance is found to be misidentified. This would impose a much greater burden on both EPA and the submitter than the existing correction mechanism.

Responses to the collection of information are voluntary.

Burden Statement: The annual public reporting burden for this collection of information is estimated to average 1.0 hour per response for an estimated 200 respondents making one or more submissions of information. These estimates include the time needed to review instructions; develop, acquire, install and utilize technology and systems for the purposes of collecting, validating and verifying information, processing and maintaining information, and disclosing and providing information; adjust the existing ways to comply with any previously applicable instructions and requirements; train personnel to be able to respond to a collection of information; search data sources; complete and review the collection of information; and transmit or otherwise disclose the information. No person is required to respond to a collection of information unless it displays a currently valid OMB control number. The OMB control numbers for these regulations are displayed in 40 CFR part 9.

Respondents/Affected Entities: Entities potentially affected by this action are persons who manufacture, process or import chemical substances in the United States.

Estimated No. of Respondents: 200.

Estimated Total Annual Burden on Respondents: 200 hours.

Frequency of Collection: On occasion.

Changes in Burden Estimates: There is no change in the total estimated respondent burden as compared with that identified in the information collection request most recently approved by OMB.

According to the procedures prescribed in 5 CFR 1320.12, EPA has submitted this ICR to OMB for review and approval. Any comments related to the renewal of this ICR should be submitted within 30 days of this document, as described above.

Dated: July 14, 1998.

Richard T. Westlund,

Acting Director, Regulatory Information Division.

[FR Doc. 98–19259 Filed 7–17–98; 8:45 am]

BILLING CODE 6560–50–P

ENVIRONMENTAL PROTECTION AGENCY

[FRL–6126–4]

National Drinking Water Advisory Council Operator Certification Working Group; Notice of Open Meeting

Under Section 10(a)(2) of Public Law 92–423, ''The Federal Advisory Committee Act,'' notice is hereby given that a meeting of the Operator Certification Working Group of the National Drinking Water Advisory Council (NDWAC), established under the Safe Drinking Water Act, as amended (42 U.S.C. S300f *et seq.*), will be held on Thursday, August 13, 1998, from 1:00 p.m. to 5:00 p.m. and Friday, August 14, 1998, from 8:30 a.m. to 4:30 p.m. at the Hotel Washington, 515 15th Street, NW, Washington, DC, 20004. The meeting is open to the public to observe, but due to past experience, seating will be limited.

The primary purpose of this meeting is for the working group to discuss the public's comments that EPA received on the Public Review Draft Guidelines for the Certification and Recertification of Community and Nontransient Noncommunity Public Water Systems. Also, the working group members will develop recommendations on appropriate changes to the guidelines, based on the public comments, for transmittal to the NDWAC. Statements from the public will be taken at the end of the meeting if time allows.

For more information, please contact Richard Naylor, Designated Federal Officer, Operator Certification Working Group, U.S. EPA, Office of Ground Water and Drinking Water (4606), 401 M Street, SW, Washington, DC 20460. The telephone number is (202) 260–5135 and the e-mail address is naylor.richard@epamail.epa.gov.

Dated: July 14, 1998.

Charlene Shaw,

Designated Federal Officer, National Drinking Water Advisory Council.

[FR Doc. 98–19260 Filed 7–17–98; 8:45 am]

BILLING CODE 6560–50–P

FEDERAL EMERGENCY MANAGEMENT AGENCY

[FEMA–1223–DR]

Florida; Amendment No. 6 to Notice of a Major Disaster Declaration

AGENCY: Federal Emergency Management Agency (FEMA).

ACTION: Notice.

SUMMARY: This notice amends the notice of a major disaster for the State of Florida, (FEMA–1223–DR), dated June 18, 1998, and related determinations.

EFFECTIVE DATE: July 3, 1998.

FOR FURTHER INFORMATION CONTACT: Madge Dale, Response and Recovery Directorate, Federal Emergency Management Agency, Washington, DC 20472, (202) 646–3260.

SUPPLEMENTARY INFORMATION: The notice of a major disaster for the State of Florida, is hereby amended to include Individual Assistance in the following areas among those areas determined to have been adversely affected by the catastrophe declared a major disaster by the President in his declaration of June 18, 1998.

Brevard, Flagler, St. Johns, Seminole, and Volusia Counties (already designated for Category B under the Public Assistance porgram).

(The following Catalog of Federal Domestic Assistance Numbers (CFDA) are to be used for reporting and drawing funds: 83.537, Community Disaster Loans; 83.538, Cora Brown Fund Program; 83.539, Crisis Counseling; 83.540, Disaster Legal Services Program; 83.541, Disaster Unemployment Assistance (DUA); 83.542, Fire Suppression Assistance; 83.543, Individual and Family Grant (IFG) Program; 83.544, Public Assistance Grants; 83.545, Disaster Housing Program; 83.548, Hazard Mitigation Grant Program)

Lacy E. Suiter,

Executive Associate Director, Response and Recovery Directorate.

[FR Doc. 98–19263 Filed 7–17–98; 8:45 am]

BILLING CODE 6718–02–P

FEDERAL EMERGENCY MANAGEMENT AGENCY

[FEMA–1230–DR]

Iowa; Amendment No. 1 to Notice of a Major Disaster Declaration

AGENCY: Federal Emergency Management Agency (FEMA).

ACTION: Notice.

SUMMARY: This notice amends the notice of a major disaster for the State of Iowa, (FEMA–1230–DR), dated July 2, 1998, and related determinations.

EFFECTIVE DATE: July 4, 1998.

FOR FURTHER INFORMATION CONTACT: Madge Dale, Response and Recovery Directorate, Federal Emergency Management Agency, Washington, DC 20472, (202) 646–3260.

SUPPLEMENTARY INFORMATION: The notice of a major disaster for the State of Iowa, is hereby amended to include the following areas among those areas determined to have been adversely affected by the catastrophe declared a major disaster by the President in his declaration of July 2, 1998:

Chickasaw and Polk Counties for Public Assistance (already designated for Individual Assistance).

Hardin, Howard, Mills, and Shelby Counties for Individual Assistance and Public Assistance.

(The following Catalog of Federal Domestic Assistance Numbers (CFDA) are to be used for reporting and drawing funds: 83.537, Community Disaster Loans; 83.538, Cora Brown Fund Program; 83.539, Crisis Counseling; 83.540, Disaster Legal Services Program; 83.541, Disaster Unemployment Assistance (DUA); 83.542, Fire Suppression Assistance; 83.543, Individual and Family Grant (IFG) Program; 83.544, Public Assistance Grants; 83.545, Disaster Housing Program; 83.548, Hazard Mitigation Grant Program)

Lacy E. Suiter,

Executive Associate Director, Response and Recovery Directorate.

[FR Doc. 98–19270 Filed 7–17–98; 8:45 am]

BILLING CODE 6718–02–P

FEDERAL EMERGENCY MANAGEMENT AGENCY

[FEMA–1230–DR]

Iowa; Amendment No. 2 to Notice of a Major Disaster Declaration

AGENCY: Federal Emergency Management Agency (FEMA).

ACTION: Notice.

SUMMARY: This notice amends the notice of a major disaster for the State of Iowa, (FEMA–1230–DR), dated July 2, 1998, and related determinations.

EFFECTIVE DATE: July 8, 1998.

FOR FURTHER INFORMATION CONTACT: Madge Dale, Response and Recovery Directorate, Federal Emergency Management Agency, Washington, DC 20472, (202) 646–3260.

SUPPLEMENTARY INFORMATION: The notice of a major disaster for the State of Iowa, is hereby amended to include the following areas among those areas determined to have been adversely affected by the catastrophe declared a major disaster by the President in his declaration of July 2, 1998:

Boone, Carroll, Grundy, Hamilton, Iowa, Jasper, Johnson, Keokuk, Louisa, Marion, Marshall, Muscatine, Poweshiek, Taylor, Wapello, and Washington Counties for Individual Assistance.

(The following Catalog of Federal Domestic Assistance Numbers (CFDA) are to be used for reporting and drawing funds: 83.537, Community Disaster Loans; 83.538, Cora Brown Fund Program; 83.539, Crisis Counseling; 83.540, Disaster Legal Services Program; 83.541, Disaster Unemployment Assistance (DUA); 83.542, Fire Suppression Assistance; 83.543, Individual and Family Grant (IFG) Program; 83.544, Public Assistance Grants; 83.545, Disaster Housing Program; 83.548, Hazard Mitigation Grant Program)

Lacy E. Suiter,

Executive Associate Director, Response and Recovery Directorate.

[FR Doc. 98–19277 Filed 7–17–98; 8:45 am]

BILLING CODE 6718–02–P

FEDERAL EMERGENCY MANAGEMENT AGENCY

[FEMA–1230–DR]

Iowa; Major Disaster and Related Determinations

AGENCY: Federal Emergency Management Agency (FEMA).

ACTION: Notice.

SUMMARY: This is a notice of the Presidential declaration of a major disaster for the State of Iowa (FEMA–1230–DR), dated July 2, 1998, and related determinations.

EFFECTIVE DATE: July 2, 1998.

FOR FURTHER INFORMATION CONTACT: Madge Dale, Response and Recovery Directorate, Federal Emergency Management Agency, Washington, DC 20472, (202) 646–3260.

SUPPLEMENTARY INFORMATION: Notice is hereby given that, in a letter dated July 2, 1998, the President declared a major disaster under the authority of the Robert T. Stafford Disaster Relief and Emergency Assistance Act (42 U.S.C. 5121 *et seq.*), as follows:

I have determined that the damage in certain areas of the State of Iowa, resulting from severe storms, tornadoes and flooding beginning on June 13, 1998, and continuing is of sufficient severity and magnitude to warrant a major disaster declaration under the Robert T. Stafford Disaster Relief and Emergency Assistance Act, P.L. 93–288, as amended (''the Stafford Act''). I, therefore, declare that such a major disaster exists in the State of Iowa.

In order to provide Federal assistance, you are hereby authorized to allocate from funds available for these purposes, such amounts as you find necessary for Federal disaster assistance and administrative expenses.

You are authorized to provide Individual Assistance, Public Assistance, and Hazard Mitigation in the designated areas. Consistent with the requirement that Federal assistance be supplemental, any Federal funds provided under the Stafford Act for Public Assistance or Hazard Mitigation will be limited to 75 percent of the total eligible costs.

The time period prescribed for the implementation of section 310(a), Priority to Certain Applications for Public Facility and Public Housing Assistance, 42 U.S.C. 5153, shall be for a period not to exceed six months after the date of this declaration.

Notice is hereby given that pursuant to the authority vested in the Director of the Federal Emergency Management Agency under Executive Order 12148, I hereby appoint Curt Musgrave of the Federal Emergency Management Agency to act as the Federal Coordinating Officer for this declared disaster.

I do hereby determine the following areas of the State of Iowa to have been

affected adversely by this declared major disaster:

Audubon, Cass, Chickasaw, Dallas, Fremont, Guthrie, Montgomery, Page, Polk and Pottawattamie Counties for Individual Assistance.

Audubon, Cass, Dallas, Fremont, Guthrie, Montgomery, Page, and Pottawattamie Counties for Public Assistance.

All counties within the State of Iowa are eligible to apply for assistance under the Hazard Mitigation Grant Program.

(The following Catalog of Federal Domestic Assistance Numbers (CFDA) are to be used for reporting and drawing funds: 83.537, Community Disaster Loans; 83.538, Cora Brown Fund Program; 83.539, Crisis Counseling; 83.540, Disaster Legal Services Program; 83.541, Disaster Unemployment Assistance (DUA); 83.542, Fire Suppression Assistance; 83.543, Individual and Family Grant (IFG) Program; 83.544, Public Assistance Grants; 83.545, Disaster Housing Program; 83.548, Hazard Mitigation Grant Program)

James L. Witt,

Director.

[FR Doc. 98–19281 Filed 7–17–98; 8:45 am]

BILLING CODE 6718–02–P

FEDERAL EMERGENCY MANAGEMENT AGENCY

[FEMA–1232–DR]

Maine; Major Disaster and Related Determinations

AGENCY: Federal Emergency Management Agency (FEMA).

ACTION: Notice.

SUMMARY: This is a notice of the Presidential declaration of a major disaster for the State of Maine (FEMA–1232–DR), dated July 2, 1998 and related determinations.

EFFECTIVE DATE: July 2, 1998.

FOR FURTHER INFORMATION CONTACT: Madge Dale, Response and Recovery Directorate, Federal Emergency Management Agency, Washington, DC 20472, (202) 646–3260.

SUPPLEMENTARY INFORMATION: Notice is hereby given that, in a letter dated July 2, 1998, the President declared a major disaster under the authority of the Robert T. Stafford Disaster Relief and Emergency Assistance Act (42 U.S.C. 5121 *et seq.*), as follows:

I have determined that the damage in certain areas of the State of Maine, resulting from severe storms and flooding on June 13, 1998, and continuing is of sufficient severity and magnitude to warrant a major disaster declaration under the Robert T. Stafford Disaster Relief and Emergency Assistance Act, P.L. 93–288, as amended (''the Stafford Act''). I, therefore, declare that such a major disaster exists in the State of Maine.

In order to provide Federal assistance, you are hereby authorized to allocate from funds available for these purposes, such amounts, as you find necessary for Federal disaster assistance and administrative expenses.

You are authorized to provide Public Assistance and Hazard Mitigation in the designated areas and any other forms of assistance under the Stafford Act you may deem appropriate. Consistent with the requirement that Federal assistance be supplemental, any Federal funds provided under the Stafford Act for Public Assistance or Hazard Mitigation will be limited to 75 percent of the total eligible costs.

The time period prescribed for the implementation of section 310(a), Priority to Certain Applications for Public Facility and Public Housing Assistance, 42 U.S.C. 5153, shall be for a period not to exceed six months after the date of this declaration.

Notice is hereby given that pursuant to the authority vested in the Director of the Federal Emergency Management Agency under Executive Order 12148, I hereby appoint Alma C. Armstrong of the Federal Emergency Management Agency to act as the Federal Coordinating Officer for this declared disaster.

I do hereby determine the following areas of the State of Maine to have been affected adversely by this declared major disaster:

Androscoggin, Franklin, Kennebec, Oxford, Somerset and York Counties for Public Assistance.

All counties within the State of Maine are eligible to apply for assistance under the Hazard Mitigation Grant Program.

(The following Catalog of Federal Domestic Assistance Numbers (CFDA) are to be used for reporting and drawing funds: 83.537, Community Disaster Loans; 83.538, Cora Brown Fund Program; 83.539, Crisis Counseling; 83.540, Disaster Legal Services Program; 83.541, Disaster Unemployment Assistance (DUA); 83.542, Fire Suppression Assistance; 83.543, Individual and Family Grant (IFG) Program; 83.544, Public Assistance Grants; 83.545, Disaster Housing Program; 83.548, Hazard Mitigation Grant Program)

James L. Witt,

Director.

[FR Doc. 98–19283 Filed 7–17–98; 8:45 am]

BILLING CODE 6718–02–P

FEDERAL EMERGENCY MANAGEMENT AGENCY

[FEMA–1224–DR]

Massachusetts; Amendment No. 2 to Notice of a Major Disaster Declaration

AGENCY: Federal Emergency Management Agency (FEMA).

ACTION: Notice.

SUMMARY: This notice amends the notice of a major disaster for the Commonwealth of Massachusetts (FEMA–1224–DR), dated June 23, 1998, and related determinations.

EFFECTIVE DATE: July 6, 1998.

FOR FURTHER INFORMATION CONTACT: Madge Dale, Response and Recovery Directorate, Federal Emergency Management Agency, Washington, DC 20472, (202) 646–3260.

SUPPLEMENTARY INFORMATION: Notice is hereby given that the incident period for this disaster is closed effective July 6, 1998.

(The following Catalog of Federal Domestic Assistance Numbers (CFDA) are to be used for reporting and drawing funds: 83.537, Community Disaster Loans; 83.538, Cora Brown Fund Program; 83.539, Crisis Counseling; 83.540, Disaster Legal Services Program; 83.541, Disaster Unemployment Assistance (DUA); 83.542, Fire Suppression Assistance; 83.543, Individual and Family Grant (IFG) Program; 83.544, Public Assistance Grants; 83.545, Disaster Housing Program; 83.548, Hazard Mitigation Grant Program)

Lacy E. Suiter,

Executive Associate Director, Response and Recovery Directorate.

[FR Doc. 98–19276 Filed 7–17–98; 8:45 am]

BILLING CODE 6718–02–P

FEDERAL EMERGENCY MANAGEMENT AGENCY

[FEMA–1213–DR]

Federated States for Micronesia; Amendment No. 3 to Notice of a Major Disaster Declaration

AGENCY: Federal Emergency Management Agency (FEMA).

ACTION: Notice.

SUMMARY: This notice amends the notice of a major disaster for the Federated States of Micronesia (FEMA–1213–DR), dated April 3, 1998, and related determinations.

EFFECTIVE DATE: June 30, 1998.

FOR FURTHER INFORMATION CONTACT: Madge Dale, Response and Recovery Directorate, Federal Emergency Management Agency, Washington, DC 20472, (202) 646–3260.

SUPPLEMENTARY INFORMATION: Notice is hereby given that the incident period for this disaster is closed effective June 30, 1998.

(The following Catalog of Federal Domestic Assistance Numbers (CFDA) are to be used for reporting and drawing funds: 83.537, Community Disaster Loans; 83.538, Cora Brown Fund Program; 83.539, Crisis Counseling; 83.540, Disaster Legal Services Program; 83.541, Disaster Unemployment

Assistance (DUA); 83.542, Fire Suppression Assistance; 83.543, Individual and Family Grant (IFG) Program; 83.544, Public Assistance Grants; 83.545, Disaster Housing Program; 83.548, Hazard Mitigation Grant Program)

Lacy E. Suiter,

Executive Associate Director, Response and Recovery Directorate.

[FR Doc. 98–19273 Filed 7–17–98; 8:45 am]

BILLING CODE 6718–02–P

FEDERAL EMERGENCY MANAGEMENT AGENCY

[FEMA–1231–DR]

New Hampshire; Major Disaster and Related Determinations

AGENCY: Federal Emergency Management Agency (FEMA).

ACTION: Notice.

SUMMARY: This is a notice of the Presidential declaration of a major disaster for the State of New Hampshire (FEMA–1231–DR), dated July 2, 1998, and related determinations.

EFFECTIVE DATE: July 2, 1998.

FOR FURTHER INFORMATION CONTACT: Madge Dale, Response and Recovery Directorate, Federal Emergency Management Agency, Washington, DC 20472, (202) 646–3260.

SUPPLEMENTARY INFORMATION: Notice is hereby given that, in a letter dated July 2, 1998, the President declared a major disaster under the authority of the Robert T. Stafford Disaster Relief and Emergency Assistance Act (42 U.S.C. 5121 *et seq.*), as follows:

I have determined that the damage in certain areas of the State of New Hampshire, resulting from severe storms and flooding on June 12, 1998, and continuing is of sufficient severity and magnitude to warrant a major disaster declaration under the Robert T. Stafford Disaster Relief and Emergency Assistance Act, P.L. 93–288, as amended (''the Stafford Act''). I, therefore, declare that such a major disaster exists in the State of New Hampshire.

In order to provide Federal assistance, you are hereby authorized to allocate from funds available for these purposes, such amounts as you find necessary for Federal disaster assistance and administrative expenses.

You are authorized to provide Public Assistance and Hazard Mitigation in the designated areas and any other forms of assistance under the Stafford Act you may deem appropriate. Consistent with the requirement that Federal assistance be supplemental, any Federal funds provided under the Stafford Act for Public Assistance or Hazard Mitigation will be limited to 75 percent of the total eligible costs.

The time period prescribed for the implementation of section 310(a), Priority to Certain Applications for Public Facility and Public Housing Assistance, 42 U.S.C. 5153, shall be for a period not to exceed six months after the date of this declaration.

Notice is hereby given that pursuant to the authority vested in the Director of the Federal Emergency Management Agency under Executive Order 12148, I hereby appoint Kevin M. Merli of the Federal Emergency Management Agency to act as the Federal Coordinating Officer for this declared disaster.

I do hereby determine the following areas of the State of New Hampshire to have been affected adversely by this declared major disaster:

Belknap, Carroll, Grafton, Merrimack, Rockingham and Sullivan Counties for Public Assistance.

All counties within the State of New Hampshire are eligible to apply for assistance under the Hazard Mitigation Grant Program.

(The following Catalog of Federal Domestic Assistance Numbers (CFDA) are to be used for reporting and drawing funds: 83.537, Community Disaster Loans; 83.538, Cora Brown Fund Program; 83.539, Crisis Counseling; 83.540, Disaster Legal Services Program; 83.541, Disaster Unemployment Assistance (DUA); 83.542, Fire Suppression Assistance; 83.543, Individual and Family Grant (IFG) Program; 83.544, Public Assistance Grants; 83.545, Disaster Housing Program; 83.548, Hazard Mitigation Grant Program)

James L. Witt,

Director.

[FR Doc. 98–19282 Filed 7–17–98; 8:45 am]

BILLING CODE 6718–02–P

FEDERAL EMERGENCY MANAGEMENT AGENCY

[FEMA–3128–EM]

New Mexico; Emergency and Related Determinations

AGENCY: Federal Emergency Management Agency (FEMA).

ACTION: Notice.

SUMMARY: This is a notice of the Presidential declaration of an emergency for the State of New Mexico (FEMA–3128–EM), dated July 2, 1998, and related determinations.

EFFECTIVE DATE: July 2, 1998.

FOR FURTHER INFORMATION CONTACT: Madge Dale, Response and Recovery Directorate, Federal Emergency Management Agency, Washington, DC 20472, (202) 646–3260.

SUPPLEMENTARY INFORMATION: Notice is hereby given that, in a letter dated July 2, 1998, the President declared an emergency under the authority of the Robert T. Stafford Disaster Relief and Emergency Assistance Act (42 U.S.C. 5121 *et seq.*), as follows:

I have determined that the emergency conditions in the State of New Mexico, resulting from extreme fire hazards beginning on June 29, 1998, and continuing, is of sufficient severity and magnitude to warrant an emergency declaration under the Robert T. Stafford Disaster Relief and Emergency Assistance Act, P.L. 93–288, as amended (''the Stafford Act''). I, therefore, declare that such an emergency exists in the State of New Mexico.

You are authorized to coordinate with other Federal agencies to provide any form of direct Federal assistance which you deem appropriate for required emergency measures, authorized under the Stafford Act, to save lives, protect property and public health and safety, or lessen or avert the threat of a catastrophe in the designated areas. You are also authorized to provide reimbursement for the eligible costs associated with the pre-staging of Emergency Management Assistance Compact fire suppression assets. In addition, you are authorized to provide such other forms of assistance under the Stafford Act, as you may deem appropriate.

In order to provide Federal assistance, you are hereby authorized to allocate from funds available for these purposes, such amounts, as you find necessary for Federal disaster assistance and administrative expenses. Consistent with the requirement that Federal assistance be supplemental, any Federal funds provided under the Stafford Act will be limited to 75 percent of the total eligible costs.

Notice is hereby given that pursuant to the authority vested in the Director of the Federal Emergency Management Agency under Executive Order 12148, I hereby appoint Graham Nance of the Federal Emergency Management Agency to act as the Federal Coordinating Officer for this declared disaster.

FEMA has been authorized to coordinate with other Federal agencies to provide any form of direct Federal assistance appropriate for required emergency measures, authorized under the Stafford Act, to save lives, protect property and public health and safety, and lessen or avert the threat of a catastrophe in the State of New Mexico. Reimbursement for the eligible costs associated with the pre-staging of Emergency Management Assistance Compact's fire suppression assets is authorized.

(The following Catalog of Federal Domestic Assistance Numbers (CFDA) are to be used for reporting and drawing funds: 83.537, Community Disaster Loans; 83.538, Cora Brown Fund Program; 83.539, Crisis Counseling; 83.540, Disaster Legal Services Program; 83.541, Disaster Unemployment Assistance (DUA); 83.542, Fire Suppression Assistance; 83.543, Individual and Family Grant (IFG) Program; 83.544, Public Assistance Grants; 83.545, Disaster Housing

Program; 83.548, Hazard Mitigation Grant Program)

James L. Witt,

Director.

[FR Doc. 98–19271 Filed 7–17–98; 8:45 am]

BILLING CODE 6718–02–P

FEDERAL EMERGENCY MANAGEMENT AGENCY

[FEMA–1222–DR]

New York; Amendment to Notice of a Major Disaster Declaration

AGENCY: Federal Emergency Management Agency (FEMA).

ACTION: Notice.

SUMMARY: This notice amends the notice of a major disaster for the State of New York (FEMA–1222–DR), dated June 16, 1998, and related determinations.

EFFECTIVE DATE: July 2, 1998.

FOR FURTHER INFORMATION CONTACT: Madge Dale, Response and Recovery Directorate, Federal Emergency Management Agency, Washington, DC 20472, (202) 646–3260.

SUPPLEMENTARY INFORMATION: Notice is hereby given that in a letter dated July 2, 1998, the President amended his previous declaration to reflect the incident period for this disaster as May 31, 1998, through and including June 2, 1998.

(The following Catalog of Federal Domestic Assistance Numbers (CFDA) are to be used for reporting and drawing funds: 83.537, Community Disaster Loans; 83.538, Cora Brown Fund Program; 83.539, Crisis Counseling; 83.540, Disaster Legal Services Program; 83.541, Disaster Unemployment Assistance (DUA); 83.542, Fire Suppression Assistance; 83.543, Individual and Family Grant (IFG) Program; 83.544, Public Assistance Grants; 83.545, Disaster Housing Program; 83.548, Hazard Mitigation Grant Program)

Lacy E. Suiter,

Executive Associate Director, Response and Recovery Directorate.

[FR Doc. 98–19275 Filed 7–17–98; 8:45 am]

BILLING CODE 6718–02–P

FEDERAL EMERGENCY MANAGEMENT AGENCY

[FEMA–1227–DR]

Ohio; Amendment No. 2 to Notice of a Major Disaster Declaration

AGENCY: Federal Emergency Management Agency (FEMA).

ACTION: Notice.

SUMMARY: This notice amends the notice of a major disaster for the State of Ohio, (FEMA–1227–DR), dated June 30, 1998, and related determinations.

EFFECTIVE DATE: July 3, 1998.

FOR FURTHER INFORMATION CONTACT: Madge Dale, Response and Recovery Directorate, Federal Emergency Management Agency, Washington, DC 20472, (202) 646–3260.

SUPPLEMENTARY INFORMATION: The notice of a major disaster for the State of Ohio, is hereby amended to include the following areas determined to have been adversely affected by the catastrophe declared a major disaster by the President in his declaration of June 30, 1998:

Coshocton, Pickaway, and Richland Counties for Individual Assistance and Public Assistance.

Franklin, Monroe, Morgan, Perry, Sandusky, and Tuscarawas Counties for Individual Assistance.

Meigs County for Individual Assistance (already designated for Public Assistance).

Harrison, Holmes, and Morrow Counties for Public Assistance.

Belmont and Ottawa Counties for Public Assistance (already designated for Individual Assistance).

(The following Catalog of Federal Domestic Assistance Numbers (CFDA) are to be used for reporting and drawing funds: 83.537, Community Disaster Loans; 83.538, Cora Brown Fund Program; 83.539, Crisis Counseling; 83.540, Disaster Legal Services Program; 83.541, Disaster Unemployment Assistance (DUA); 83.542, Fire Suppression Assistance; 83.543, Individual and Family Grant (IFG) Program; 83.544, Public Assistance Grants; 83.545, Disaster Housing Program; 83.548, Hazard Mitigation Grant Program)

Lacy E. Suiter,

Executive Associate Director, Response and Recovery Directorate.

[FR Doc. 98–19264 Filed 7–17–98; 8:45 am]

BILLING CODE 6718–02–P

FEDERAL EMERGENCY MANAGEMENT AGENCY

[FEMA–1227–DR]

Ohio; Amendment No. 3 to Notice of a Major Disaster Declaration

AGENCY: Federal Emergency Management Agency (FEMA).

ACTION: Notice.

SUMMARY: This notice amends the notice of a major disaster for the State of Ohio, (FEMA–1227–DR), dated June 30, 1998, and related determinations.

EFFECTIVE DATE: July 4, 1998.

FOR FURTHER INFORMATION CONTACT: Madge Dale, Response and Recovery Directorate, Federal Emergency Management Agency, Washington, DC 20472, (202) 646–3260.

SUPPLEMENTARY INFORMATION: The notice of a major disaster for the State of Ohio, is hereby amended to include the following areas determined to have been adversely affected by the catastrophe declared a major disaster by the President in his declaration of June 30, 1998:

Jackson, Monroe, Morgan, Perry, and Tuscarawas Counties for Public Assistance (already designated for Individual Assistance).

Harrison County for Individual Assistance (already designated for Public Assistance).

(The following Catalog of Federal Domestic Assistance Numbers (CFDA) are to be used for reporting and drawing funds: 83.537, Community Disaster Loans; 83.538, Cora Brown Fund Program; 83.539, Crisis Counseling; 83.540, Disaster Legal Services Program; 83.541, Disaster Unemployment Assistance (DUA); 83.542, Fire Suppression Assistance; 83.543, Individual and Family Grant (IFG) Program; 83.544, Public Assistance Grants; 83.545, Disaster Housing Program; 83.548, Hazard Mitigation Grant Program)

Lacy E. Suiter,

Executive Associate Director, Response and Recovery Directorate.

[FR Doc. 98–19269 Filed 7–17–98; 8:45 am]

BILLING CODE 6718–02–P

FEDERAL EMERGENCY MANAGEMENT AGENCY

[FEMA–1227–DR]

Ohio; Major Disaster and Related Determinations

AGENCY: Federal Emergency Management Agency (FEMA).

ACTION: Notice.

SUMMARY: This is a notice of the Presidential declaration of a major disaster for the State of Ohio (FEMA–1227–DR), dated June 30, 1998, and related determinations.

EFFECTIVE DATE: June 30, 1998.

FOR FURTHER INFORMATION CONTACT: Madge Dale, Response and Recovery Directorate, Federal Emergency Management Agency, Washington, DC 20472, (202) 646–3260.

SUPPLEMENTARY INFORMATION: Notice is hereby given that, in a letter dated June 30, 1998, the President declared a major disaster under the authority of the Robert T. Stafford Disaster Relief and Emergency Assistance Act (42 U.S.C. 5121 *et seq.*), as follows:

I have determined that the damage in certain areas of the State of Ohio, resulting from severe storms, flooding and tornadoes on June 24, 1998, and continuing is of sufficient severity and magnitude to warrant a major disaster declaration under the Robert T. Stafford Disaster Relief and Emergency

Assistance Act, P.L. 93–288, as amended (''the Stafford Act''). I, therefore, declare that such a major disaster exists in the State of Ohio.

In order to provide Federal assistance, you are hereby authorized to allocate from funds available for these purposes, such amounts as you find necessary for Federal disaster assistance and administrative expenses.

You are authorized to provide Individual Assistance, Hazard Mitigation, and debris removal and emergency protective measures (Categories A and B) under Public Assistance in the designated areas and any other forms of assistance under the Stafford Act you may deem appropriate. Consistent with the requirement that Federal assistance be supplemental, any Federal funds provided under the Stafford Act for Public Assistance or Hazard Mitigation will be limited to 75 percent of the total eligible costs.

The time period prescribed for the implementation of section 310(a), Priority to Certain Applications for Public Facility and Public Housing Assistance, 42 U.S.C. 5153, shall be for a period not to exceed six months after the date of this declaration.

Notice is hereby given that pursuant to the authority vested in the Director of the Federal Emergency Management Agency under Executive Order 12148, I hereby appoint Timothy J. Monteen of the Federal Emergency Management Agency to act as the Federal Coordinating Officer for this declared disaster.

I do hereby determine the following areas of the State of Ohio to have been affected adversely by this declared major disaster:

Guernsey, Muskingum, Noble, and Washington Counties for Individual Assistance and debris removal and emergency protective measures under the Public Assistance program (Categories A and B).

All counties within the State of Ohio are eligible to apply for assistance under the Hazard Mitigation Grant Program.

(The following Catalog of Federal Domestic Assistance Numbers (CFDA) are to be used for reporting and drawing funds: 83.537, Community Disaster Loans; 83.538, Cora Brown Fund Program; 83.539, Crisis Counseling; 83.540, Disaster Legal Services Program; 83.541, Disaster Unemployment Assistance (DUA); 83.542, Fire Suppression Assistance; 83.543, Individual and Family Grant (IFG) Program; 83.544, Public Assistance Grants; 83.545, Disaster Housing Program; 83.548, Hazard Mitigation Grant Program)

James L. Witt,

Director.

[FR Doc. 98–19278 Filed 7–17–98; 8:45 am]

BILLING CODE 6718–02–P

FEDERAL EMERGENCY MANAGEMENT AGENCY

[FEMA–1210–DR]

Republic of the Marshall Islands; Amendment No. 1 to Notice of a Major Disaster Declaration

AGENCY: Federal Emergency Management Agency (FEMA).

ACTION: Notice.

SUMMARY: This notice amends the notice of a major disaster for the Republic of the Marshall Islands (FEMA–1210–DR), dated March 20, 1998, and related determinations.

EFFECTIVE DATE: June 30, 1998.

FOR FURTHER INFORMATION CONTACT: Madge Dale, Response and Recovery Directorate, Federal Emergency Management Agency, Washington, DC 20472, (202) 646–3260.

SUPPLEMENTARY INFORMATION: Notice is hereby given that the incident period for this disaster is closed effective June 30, 1998.

(The following Catalog of Federal Domestic Assistance Numbers (CFDA) are to be used for reporting and drawing funds: 83.537, Community Disaster Loans; 83.538, Cora Brown Fund Program; 83.539, Crisis Counseling; 83.540, Disaster Legal Services Program; 83.541, Disaster Unemployment Assistance (DUA); 83.542, Fire Suppression Assistance; 83.543, Individual and Family Grant (IFG) Program; 83.544, Public Assistance Grants; 83.545, Disaster Housing Program; 83.548, Hazard Mitigation Grant Program)

Lacy E. Suiter,

Executive Associate Director, Response and Recovery Directorate.

[FR Doc. 98–19272 Filed 7–17–98; 8:45 am]

BILLING CODE 6718–02–P

FEDERAL EMERGENCY MANAGEMENT AGENCY

[FEMA–1218–DR]

South Dakota; Amendment to Notice of a Major Disaster Declaration

AGENCY: Federal Emergency Management Agency (FEMA).

ACTION: Notice.

SUMMARY: This notice amends the notice of a major disaster for the State of South Dakota (FEMA–1218–DR), dated June 1, 1998 and related determinations.

EFFECTIVE DATE: June 22, 1998.

FOR FURTHER INFORMATION CONTACT: Madge Dale, Response and Recovery Directorate, Federal Emergency Management Agency, Washington, DC 20472, (202) 646–3260.

SUPPLEMENTARY INFORMATION: Notice is hereby given that the incident period for this disaster is closed effective June 22, 1998.

(The following Catalog of Federal Domestic Assistance Numbers (CFDA) are to be used for reporting and drawing funds: 83.537, Community Disaster Loans; 83.538, Cora Brown Fund Program; 83.539, Crisis Counseling; 83.540, Disaster Legal Services Program; 83.541, Disaster Unemployment Assistance (DUA); 83.542, Fire Suppression Assistance; 83.543, Individual and Family Grant (IFG) Program; 83.544, Public Assistance Grants; 83.545, Disaster Housing Program; 83.548, Hazard Mitigation Grant Program)

Lacy E. Suiter,

Executive Associate Director, Response and Recovery Directorate.

[FR Doc. 98–19274 Filed 7–17–98; 8:45 am]

BILLING CODE 6718–02–P

FEDERAL EMERGENCY MANAGEMENT AGENCY

[FEMA–1228–DR]

Vermont; Major Disaster and Related Determinations

AGENCY: Federal Emergency Management Agency (FEMA).

ACTION: Notice.

SUMMARY: This is a notice of the Presidential declaration of a major disaster for the State of Vermont FEMA–1228–DR), dated June 30, 1998, and related determinations.

EFFECTIVE DATE: June 30, 1998.

FOR FURTHER INFORMATION CONTACT: Madge Dale, Response and Recovery Directorate, Federal Emergency Management Agency, Washington, DC 20472, (202) 646–3260.

SUPPLEMENTARY INFORMATION: Notice is hereby given that, in a letter dated June 30, 1998, the President declared a major disaster under the authority of the Robert T. Stafford Disaster Relief and Emergency Assistance Act (42 U.S.C. 5121 *et seq.*), as follows:

I have determined that the damage in certain areas of the State of Vermont, resulting from severe storms and flooding beginning on June 17, 1998, and continuing, is of sufficient severity and magnitude to warrant a major disaster declaration under the Robert T. Stafford Disaster Relief and Emergency Assistance Act, P.L. 93–288, as amended (''the Stafford Act''). I, therefore, declare that such a major disaster exists in the State of Vermont.

In order to provide Federal assistance, you are hereby authorized to allocate from funds available for these purposes, such amounts as you find necessary for Federal disaster assistance and administrative expenses.

You are authorized to provide Individual Assistance, Public Assistance, and Hazard

Mitigation in the designated areas. Consistent with the requirement that Federal assistance be supplemental, any Federal funds provided under the Stafford Act for Public Assistance or Hazard Mitigation will be limited to 75 percent of the total eligible costs.

The time period prescribed for the implementation of section 310(a), Priority to Certain Applications for Public Facility and Public Housing Assistance, 42 U.S.C. 5153, shall be for a period not to exceed six months after the date of this declaration.

Notice is hereby given that pursuant to the authority vested in the Director of the Federal Emergency Management Agency under Executive Order 12148, I hereby appoint Edward A. Thomas of the Federal Emergency Management Agency to act as the Federal Coordinating Officer for this declared disaster.

I do hereby determine the following areas of the State of Vermont to have been affected adversely by this declared major disaster:

Addison, Chittenden, Franklin, Lamoille, Orange, Rutland, Washington and Windsor Counties for Individual Assistance and Public Assistance.

All counties within the State of Vermont are eligible to apply for assistance under the Hazard Mitigation Grant Program.

(The following Catalog of Federal Domestic Assistance Numbers (CFDA) are to be used for reporting and drawing funds: 83.537, Community Disaster Loans; 83.538, Cora Brown Fund Program; 83.539, Crisis Counseling; 83.540, Disaster Legal Services Program; 83.541, Disaster Unemployment Assistance (DUA); 83.542, Fire Suppression Assistance; 83.543, Individual and Family Grant (IFG) Program; 83.544, Public Assistance Grants; 83.545, Disaster Housing Program; 83.548, Hazard Mitigation Grant Program)

James L. Witt,

Director.

[FR Doc. 98–19279 Filed 7–17–98; 8:45 am]

BILLING CODE 6718–02–P

FEDERAL EMERGENCY MANAGEMENT AGENCY

[FEMA–1229–DR]

West Virginia; Major Disaster and Related Determinations

AGENCY: Federal Emergency Management Agency (FEMA).

ACTION: Notice.

SUMMARY: This is a notice of the Presidential declaration of a major disaster for the State of West Virginia (FEMA–1229–DR), dated July 1, 1998, and related determinations.

EFFECTIVE DATE: July 1, 1998.

FOR FURTHER INFORMATION CONTACT: Madge Dale, Response and Recovery Directorate, Federal Emergency Management Agency, Washington, DC 20472, (202) 646–3260.

SUPPLEMENTARY INFORMATION: Notice is hereby given that, in a letter dated July 1, 1998, the President declared a major disaster under the authority of the Robert T. Stafford Disaster Relief and Emergency Assistance Act (42 U.S.C. 5121 *et seq.*), as follows:

I have determined that the damage in certain areas of the State of West Virginia, resulting from severe storms, flooding and tornadoes beginning on June 26, 1998, and continuing is of sufficient severity and magnitude to warrant a major disaster declaration under the Robert T. Stafford Disaster Relief and Emergency Assistance Act, P.L. 93–288, as amended (''the Stafford Act''). I, therefore, declare that such a major disaster exists in the State of West Virginia.

In order to provide Federal assistance, you are hereby authorized to allocate from funds available for these purposes, such amounts as you find necessary for Federal disaster assistance and administrative expenses.

You are authorized to provide Individual Assistance, Hazard Mitigation, and debris removal and emergency protective measures (Categories A and B) under Public Assistance in the designated areas and any other forms of assistance under the Stafford Act you may deem appropriate. Consistent with the requirement that Federal assistance be supplemental, any Federal funds provided under the Stafford Act for Public Assistance or Hazard Mitigation will be limited to 75 percent of the total eligible costs.

The time period prescribed for the implementation of section 310(a), Priority to Certain Applications for Public Facility and Public Housing Assistance, 42 U.S.C. 5153, shall be for a period not to exceed six months after the date of this declaration.

Notice is hereby given that pursuant to the authority vested in the Director of the Federal Emergency Management Agency under Executive Order 12148, I hereby appoint Robert J. Gunter of the Federal Emergency Management Agency to act as the Federal Coordinating Officer for this declared disaster.

I do hereby determine the following areas of the State of West Virginia to have been affected adversely by this declared major disaster:

Braxton, Gilmer, Jackson, Kanawha, Roane, and Wood Counties for Individual Assistance and debris removal and emergency protective measures under the Public Assistance program (Categories A and B).

All counties within the State of West Virginia are eligible to apply for assistance under the Hazard Mitigation Grant Program.

(The following Catalog of Federal Domestic Assistance Numbers (CFDA) are to be used for reporting and drawing funds: 83.537, Community Disaster Loans; 83.538, Cora Brown Fund Program; 83.539, Crisis Counseling; 83.540, Disaster Legal Services Program; 83.541, Disaster Unemployment Assistance (DUA); 83.542, Fire Suppression Assistance; 83.543, Individual and Family Grant (IFG) Program; 83.544, Public Assistance Grants; 83.545, Disaster Housing Program; 83.548, Hazard Mitigation Grant Program)

James L. Witt,

Director.

[FR Doc. 98–19280 Filed 7–17–98; 8:45 am]

BILLING CODE 6718–02–P

FEDERAL LABOR RELATIONS AUTHORITY

Senior Executive Service; Performance Review Board

AGENCY: Federal Labor Relations Authority.

ACTION: Notice.

SUMMARY: Notice is hereby given of the names on the Performance Review Board.

DATES: July 20, 1998.

FOR FURTHER INFORMATION CONTACT: Michele Pilipovich, Human Resources Director, Federal Labor Relations Authority (FLRA), 607 Fourteenth Street, NW, Washington, DC 20424–0001, (202) 482–6660.

SUPPLEMENTARY INFORMATION: Section 4314(c)(1) through (5) of Title 5, U.S.C. requires that each agency establish, in accordance with regulations prescribed by the Office of Personnel Management, one or more performance review boards. The boards shall review and evaluate the initial appraisal of a senior executive's performance by the supervisor, and make recommendations to the appointing authority relative to the performance of the senior executive.

The following persons will serve on the FLRA's Performance Review Board:

Solly Thomas, Office of the Executive Director, FLRA

William E. Washington, Office of the General Counsel, FLRA

Deidre Flippen, Equal Employment Opportunity Commission

Gloria Joseph, National Labor Relations Board

Darrell L. Netherton, Merit Systems Protection Board

Solly Thomas,

Executive Director.

[FR Doc. 98–19289 Filed 7–17–98; 8:45 am]

BILLING CODE 6727–01–P

FEDERAL MARITIME COMMISSION

[Docket No. 98–12]

Panalpina Inc. v. Eastern Mediterranean Shipping Corp., Notice of Filing of Complaint and Assignment

Notice is given that a complaint filed by Panalpina Inc. (''Complainant'') against Eastern Mediterranean Shipping Corp. (''Respondent'') was served July 15, 1998. Complainant alleges that Respondent has violated sections 10(b)(6)(D) and 10(d)(1) of the Shipping Act of 1984, 46 U.S.C. app. §§ 1709(b)(6)(D) and (d)(1), by accepting two shipments for through movement, but failing to provide information as to the status and location of the shipments, failing to provide for the transhipment of the containers, failing to deliver the shipments to the designated consignees, retaining prepaid ocean freight charges received for the through movement of the shipments, and causing Complainant to incur additional storage, demurrage and ocean freight charges.

This proceeding has been assigned to the office of Administrative Law Judges. Hearing in this matter if any is held, shall commence within the tine limitations prescribed in 46 CFR 502.61, and only after consideration has been given by the parties and the presiding officer to the use of alternative forms of dispute resolution. The hearing shall include oral testimony and cross-examination in the discretion of the presiding officer only upon proper showing that there are genuine issues of material fact that cannot be resolved on the basis of sworn statements, affidavits, depositions, or other documents or that the nature of the matter in issue is such that an oral hearing and cross-examination are necessary for the development of an adequate record. Pursuant to the further terms of 46 CFR 502.61, the initial decision of the presiding officer in this proceeding shall be issued by July 15, 1999, and the final decision of the Commission shall be issued by November 12, 1999.

Joseph C. Polking,

Secretary.

[FR Doc. 98–19262 Filed 7–17–98; 8:45 am]

BILLING CODE 6730–01–M

FEDERAL RESERVE SYSTEM

Change in Bank Control Notices; Acquisitions of Shares of Banks or Bank Holding Companies

The notificants listed below have applied under the Change in Bank Control Act (12 U.S.C. 1817(j)) and § 225.41 of the Board's Regulation Y (12 CFR 225.41) to acquire a bank or bank holding company. The factors that are considered in acting on the notices are set forth in paragraph 7 of the Act (12 U.S.C. 1817(j)(7)).

The notices are available for immediate inspection at the Federal Reserve Bank indicated. The notices also will be available for inspection at the offices of the Board of Governors. Interested persons may express their views in writing to the Reserve Bank indicated for that notice or to the offices of the Board of Governors. Comments must be received not later than August 4, 1998.

A. Federal Reserve Bank of Cleveland (Paul Kaboth, Banking Supervisor) 1455 East Sixth Street, Cleveland, Ohio 44101-2566:

1. Max A. Smith, Hope E. Smith, Ray Jeffery, Dorothy C. Jeffery, and Carol J. Chilcote, all of Antwerp, Ohio; to acquire voting shares of Diamond Bancshares., Inc., Antwerp, Ohio, and thereby indirectly acquire voting shares of Antwerp Exchange Bank Company, Antwerp, Ohio.

Board of Governors of the Federal Reserve System, July 15, 1998.

Jennifer J. Johnson,

Secretary of the Board.

[FR Doc. 98–19291 Filed 7–17–98; 8:45 am]

BILLING CODE 6210–01–F

FEDERAL RESERVE SYSTEM

Formations of, Acquisitions by, and Mergers of Bank Holding Companies

The companies listed in this notice have applied to the Board for approval, pursuant to the Bank Holding Company Act of 1956 (12 U.S.C. 1841 *et seq.*) (BHC Act), Regulation Y (12 CFR Part 225), and all other applicable statutes and regulations to become a bank holding company and/or to acquire the assets or the ownership of, control of, or the power to vote shares of a bank or bank holding company and all of the banks and nonbanking companies owned by the bank holding company, including the companies listed below.

The applications listed below, as well as other related filings required by the Board, are available for immediate inspection at the Federal Reserve Bank indicated. The application also will be available for inspection at the offices of the Board of Governors. Interested persons may express their views in writing on the standards enumerated in the BHC Act (12 U.S.C. 1842(c)). If the proposal also involves the acquisition of a nonbanking company, the review also includes whether the acquisition of the nonbanking company complies with the standards in section 4 of the BHC Act. Unless otherwise noted, nonbanking activities will be conducted throughout the United States.

Unless otherwise noted, comments regarding each of these applications must be received at the Reserve Bank indicated or the offices of the Board of Governors not later than August 14, 1998.

A. Federal Reserve Bank of Philadelphia (Michael E. Collins, Senior Vice President) 100 North 6th Street, Philadelphia, Pennsylvania 19105-1521:

1. Susquehanna Bancshares, Inc., Lititz, Pennsylvania; to acquire 100 percent of the voting shares of Cardinal Bancorp, Everette, Pennsylvania, and thereby indirectly acquire First American National Bank of Pennsylvania, Everette, Pennsylvania.

B. Federal Reserve Bank of Minneapolis (Karen L. Grandstrand, Vice President) 90 Hennepin Avenue, P.O. Box 291, Minneapolis, Minnesota 55480-0291:

1. United Financial Corp., Great Falls, Montana; to become a bank holding company by acquiring 100 percent of the voting shares of Choteau County Bancshares, Inc., Fort Benton, Montana, and thereby indirectly acquire First State Bank of Fort Benton, Fort Benton, Montana.

In connection with the application, Applicant also has applied to retain Heritage Bank, FSB, Great Falls, Montana, and thereby engage in owning, controlling, or operating a savings association, pursuant to § 225.28(b)(4)(ii) of Regulation Y, and acquire Fort Benton Insurance Agency, Fort Benton, Montana, through its acquisition of Choteau County Bancshares, Inc., Fort Benton, Montana, and thereby engage in general insurance agency activities in a town of less than 5,000, pursuant to § 225.28(b)(11)(iii) of Regulation Y.

C. Federal Reserve Bank of Kansas City (D. Michael Manies, Assistant Vice President) 925 Grand Avenue, Kansas City, Missouri 64198-0001:

1. New Millennium Bankshares, Inc., Topeka, Kansas; to become a bank holding company by acquiring 100 percent of the voting shares of Alliance Bank, Topeka, Kansas (a de novo bank in organization).

D. Federal Reserve Bank of Dallas (W. Arthur Tribble, Vice President) 2200 North Pearl Street, Dallas, Texas 75201-2272:

1. First Baird Bancshares, Inc., Baird, Texas; First Baird Bancshares of Delaware, Inc., Dover, Delaware; Weatherford Bancshares, Inc., Baird, Texas; and First Weatherford Bancshares, Inc., Carson City, Nevada;

to acquire 100 percent of the voting shares of Western American National Bank, Bedford, Texas. Comments regarding this application must be received not later than July 30, 1998.

Board of Governors of the Federal Reserve System, July 15, 1998.

Jennifer J. Johnson,

Secretary of the Board.

[FR Doc. 98–19293 Filed 7–17–98; 8:45 am]

BILLING CODE 6210–01–F

FEDERAL RESERVE SYSTEM

Notice of Proposals to Engage in Permissible Nonbanking Activities or to Acquire Companies that are Engaged in Permissible Nonbanking Activities

The companies listed in this notice have given notice under section 4 of the Bank Holding Company Act (12 U.S.C. 1843) (BHC Act) and Regulation Y, (12 CFR Part 225) to engage *de novo*, or to acquire or control voting securities or assets of a company, including the companies listed below, that engages either directly or through a subsidiary or other company, in a nonbanking activity that is listed in § 225.28 of Regulation Y (12 CFR 225.28) or that the Board has determined by Order to be closely related to banking and permissible for bank holding companies. Unless otherwise noted, these activities will be conducted throughout the United States.

Each notice is available for inspection at the Federal Reserve Bank indicated. The notice also will be available for inspection at the offices of the Board of Governors. Interested persons may express their views in writing on the question whether the proposal complies with the standards of section 4 of the BHC Act.

Unless otherwise noted, comments regarding the applications must be received at the Reserve Bank indicated or the offices of the Board of Governors not later than August 4, 1998.

A. Federal Reserve Bank of New York (Betsy Buttrill White, Senior Vice President) 33 Liberty Street, New York, New York 10045-0001:

1. Barclays PLC and Barclays Bank PLC, both of London, England; to acquire through its subsidiary, Barclays Capital Inc., New York, New York, in the acquisition of a substantial portion of the securities lending and prime brokerage business of Daiwa Securities America Inc., New York, New York, and thereby engage in lending and securities activities, pursuant to §§ 225.28(b)(2)(i) and (b)(7) of Regulation Y.

B. Federal Reserve Bank of Chicago (Philip Jackson, Applications Officer) 230 South LaSalle Street, Chicago, Illinois 60690-1413:

1. State Financial Services Corporation, Hales Corners, Wisconsin; to acquire Home Bancorp of Elgin, Inc., Elgin, Illinois, a savings and loan holding company, and indirectly acquire Home Federal Savings, Elgin, Illinois, pursuant to § 225.28(b)(4)(ii) of Regulation Y.

Board of Governors of the Federal Reserve System, July 15, 1998.

Jennifer J. Johnson,

Secretary of the Board.

[FR Doc. 98–19292 Filed 7–17–98; 8:45 am]

BILLING CODE 6210–01–F

DEPARTMENT OF HEALTH AND HUMAN SERVICES

Office of the Secretary

HHS Management and Budget Office; Statement of Organization, Function, and Delegations of Authority

Part A, Office of the Secretary, Statement of Organization, Functions and Delegations of Authority for the Department of Health and Human Services is being amended at Chapter AM, HHS Management and Budget Office, Chapter AML, Office of Budget, as last amended at 61 FR 37068 7/16/1996; Chapter AMN, Office of Finance, as last amended at 61 FR 47520–23 9/9/1996; and Chapter AMG, the Office of Grants and Acquisition Management, as last amended at 61 FR 43363–65 8/22/1996. The primary changes are to reflect a consolidation of functions related to the Government Performance and Results Act (GPRA); and a realignment of the Federal Management Financial Integrity Act and audit follow-up functions. The changes are as follows:

I. Under Chapter AMS, Office of Finance, Section AMS.20 Functions, made the following changes:

a. Under the Office of Finance (AMS) delete paragraph ''e'' and replace with the following:

''e. Provide support and guidance to the Assistant Secretary for Management and Budget and the HHS Operating Divisions for the Federal Managers Financial Integrity Act (FMFIA). Provides staff assistance to the ASMB and the HHS Operating Divisions in the implementation, management and analysis of Federal management control policies and processes to the FMFIA and implementing regulations. Represents the Department in government-wide activities to implement FMFIA policies, requirements and processes.

b. Under the Office of Financial Policy (AMS1), Division of Financial Management Policy (AMS11), delete paragraph (c), and renumber paragraphs ''d'' through ''l,'' as paragraphs ''c'' through ''(m).''

II. Under Chapter AML, Office of Budget, Division of Program Integrity and Organizational Management (AML2), delete in its entirety and replace with the following:

4. Division of Program Integrity and Organizational Management. The Division:

a. Reviews and analyzes the budgets of the Office of Inspector General (OIG) and Office for Civil Rights (OCR). Prepares special analyses of OIG and OCR budgets for the purpose of evaluating capacity and determining if alternative approaches are feasible. These analyses would usually be for the use of the Deputy Assistant Secretary, Budget, the Assistant Secretary for Management and Budget, and the Secretary. Monitors Congressional appropriations hearings in which the OIG and/or OCR are participants.

b. Provides staff assistance to the Secretary, the Assistant Secretary for Management and Budget, the Service and Supply Fund (SSF) Board of Directors, OPDIV Budget Officers, and STAFFDIV heads in the budgetary and financial management of the Service and Supply Fund.

c. Provides for policy management, and financial integrity of the SSF in the provision of Departmental common use administrative services.

d. Provides budget policy and technical support to the Program Support Center Director (and other activity managers) on all SSF activities.

e. Directs and provides technical guidance to SSF activity managers in preparing annual budgets. Assists in the planning and preparation of the SSF budget for presentation to the SSF Board, the Office of Management and Budget, and Congress.

f. Directs and provides technical guidance to SSF accountants in preparing annual financial statements. Assists in the planning and preparation of these statements for presentation to the SSF Board, auditors, and the Office of Management and Budget.

g. Prepares apportionment requests for the Service and Supply Fund.

h. Establishes Department policy in the management of Inspector General reports and audits.

i. Serves as the principal source of advice on all aspects of Department-wide organizational analysis including: (1) Planning for new organizational elements; (2) evaluating current organizational structures for

effectiveness; (3) conducting the review process for reorganization proposals. Manages the reorganization process for the Office of the Secretary (OS) requiring the Assistant Secretary for Management and Budget or the Secretary's signature. Administers the Department's system for the review, approval and documentation of delegations of authority. Develops Department-wide policies and provides technical assistance on the use and application of delegations of authority. Advises senior officials within the Department on delegations of authority, coordinates review of proposed delegations requiring the Secretary's or the Assistant Secretary for Management and Budget's approval. Analyzes and makes recommendations related to legislative proposals with potential impact upon the Department's organizational structure or managerial procedures.

j. Manages, in accordance with the Paperwork Reduction Act of 1980, as amended, the OS activities related to the review and approval of all public use reports and record-keeping requirements which impose a paperwork burden on the public. Develops policies for and manages the OS Information Colllection Budget and the Information Collection Budget process. Develops policies and procedures for the OS and carries out analytical and oversight activities related to the Department's paperwork burden reduction efforts.

k. Manages the Departmental Standard Administrative Code (SAC) system, providing oversight, advice and assistance to ensure codes are in accord with the current approved organization.

l. Provides staff assistance to the Assistant Secretary for Management and Budget and the HHS Operating Divisions in the implementation, management and analysis for: (1) Strategic planning and for the development and implementation of performance measures under the Government Performance and Results Act (GPRA); and (2) budget-related performance planning and annual performance plans required under the Government Performance and Results Act (GPRA).

m. Represents the Department in government-wide activities to implement the development and implementation of performance measures under GPRA and budget-related GPRA performance planning policies, requirements and processes.

n. Provides special management review services for selected activities.

III. Under Chapter AMG, Office of Grants and Acquisition Management, at the end of Section AMG.20 Functions, paragraph ''F. Office of Resolution and Cost Policy (AMG3),'' add the following paragraph:

''m. Provides staff assistance to the Assistant Secretary for Management and Budget and the HHS Operating Divisions in the implementation, management and analysis of audit follow-up management and Semiannual Management and Inspector General reports under the Inspector General Act Amendments of 1988 (IGAA). Represents the Department in government-wide activities to implement audit follow-up policies, requirements and processes.''

Dated: July 6, 1998.

John J. Callahan,

Assistant Secretary for Management and Budget.

[FR Doc. 98–19243 Filed 7–17–98; 8:45 am]

BILLING CODE 4510–04–M

DEPARTMENT OF HEALTH AND HUMAN SERVICES

Administration on Aging

[Program Announcement No. AoA–98–8]

Fiscal Year 1998 Program Announcement; Availability of Funds and Notice Regarding Applications

AGENCY: Administration on Aging, HHS.

ACTION: Announcement of availability of funds and request for applications to carry out the functions of a National Resource and Educational Center on Women and Retirement.

SUMMARY: The Administration of Aging (AoA) announces that under this program announcement it will hold a competition for a grant award for a National Resource and Educational Center on Women and Retirement. The deadline date for the submission of applications is September 9, 1998. Public and/or nonprofit agencies, organizations, and institutions are eligible to apply under this program announcement. To be considered for funding, however, applicants must demonstrate a knowledge base, and a proven track record of experience, in issues and programs of relevance to women, economic security, and retirement.

Application kits are available by writing to the Department of Health and Humans Services, Administration on Aging, Office of Program Development, 330 Independence Avenue, S.W., Room 4274, Washington, DC 20201, telephone (202) 619–1269 or (202) 619–1058.

Dated: July 15, 1998.

Jeanette C. Takamura,

Assistant Secretary for Aging.

[FR Doc. 98–19287 Filed 7–17–98; 8:45 am]

BILLING CODE 4150–40–M

DEPARTMENT OF HEALTH AND HUMAN SERVICES

Centers for Disease Control and Prevention

Meeting

The National Immunization Program, Centers for Disease Control and Prevention (CDC) announces the following meeting:

Name: The National Immunization Program (NIP) Technical Vision Meeting on Immunization Registry Networks.

Time and Date: 12 noon–5 p.m., July 30, 1998; 9 a.m.–4 p.m., July 31, 1998.

Place: NIP, Koger Office Park, Stanford Building, Satcher Room A, 2939 Flowers Road, Atlanta, Georgia 30341.

Status: Open to the public, limited only by the space available. The meeting room accommodates approximately 30 people.

Purpose: To receive input from technical experts in the field of electronic information systems development on architectural models for immunization registry networks. The outcome of this meeting is to provide technical options and possible standard approaches for exchange of information among state and local immunization registries.

Matters to be Discussed: Agenda items will include an overview of immunization registries and discussions on the following issues: connectivity; system security; interfacing with vendor developed systems; command and control; and various technical platform options.

Agenda items are subject to change as priorities dictate.

Contact Person for More Information: Robb Linkins, Ph.D., M.P.H., Chief, Systems Development Branch, Data Management Division, NIP, CDC, 1600 Clifton Road, NE, M/S E–62, Atlanta, Georgia 30333, telephone 404/639–8728, e-mail rxl3@cdc.gov.

Dated: June 13, 1998.

Carolyn J. Russell,

Director, Management Analysis and Services Office, Centers for Disease Control and Prevention (CDC).

[FR Doc. 98–19218 Filed 7–17–98; 8:45 am]

BILLING CODE 4163–18–P

DEPARTMENT OF HEALTH AND HUMAN SERVICES

Food and Drug Administration

Gastroenterology and Urology Devices Panel of the Medical Devices Advisory Committee; Notice of Meeting

AGENCY: Food and Drug Administration, HHS.

ACTION: Notice.

This notice announces a forthcoming meeting of a public advisory committee of the Food and Drug Administration (FDA). The meeting will be open to the public.

Name of Committee: Gastroenterology and Urology Devices Panel of the Medical Devices Advisory Committee.

General Function of the Committee: To provide advice and recommendations to the agency on FDA regulatory issues.

Date and Time: The meeting will be held on July 30, 1998, 9:30 a.m. to 5 p.m.

Location: Corporate Bldg., conference room 020B, 9200 Corporate Blvd., Rockville, MD.

Contact Person: Mary J. Cornelius, Center for Devices and Radiological Health (HFZ–470), Food and Drug Administration, 9200 Corporate Blvd., Rockville, MD 20850, 301–594–2194, ext. 118, or FDA Advisory Committee Information Line, 1–800–741–8138 (301–443–0572 in the Washington, DC area), code 12523. Please call the Information Line for up-to-date information on this meeting.

Agenda: The committee will discuss: (1) Reclassification of extracorporeal shock wave lithotriptors indicated for the fragmentation of kidney and ureteral calculi, (2) revised clinical and preclinical performance testing requirements, and (3) labeling.

Procedure: Interested persons may present data, information, or views, orally or in writing, on issues pending before the committee. Written submissions may be made to the contact person by July 23, 1998. Oral presentations from the public will be scheduled between approximately 9:30 a.m. and 10 a.m. Near the end of the committee deliberations, a 30-minute open public session will be conducted for interested persons to address issues specific to the FDA proposed reclassification before the committee. Time allotted for each presentation may be limited. Those desiring to make formal oral presentations should notify the contact person before July 23, 1998, and submit a brief statement of the general nature of the evidence or arguments they wish to present, the names and addresses of proposed participants, and an indication of the approximate time requested to make their presentation.

Notice of this meeting is given under the Federal Advisory Committee Act (5 U.S.C. app. 2).

FDA regrets that it was unable to publish this notice 15 days prior to the Gastroenterology and Urology Devices Panel of the Medical Devices Advisory Committee meeting. Because the agency believes there is some urgency to bring these issues to public discussion and qualified members of the Gastroenterology and Urology Devices Panel of the Medical Devices Advisory Committee were available at this time, the Commissioner concluded that it was in the public interest to hold this meeting even if there was not sufficient time for the customary 15-day public notice.

Dated: July 10, 1998.

Michael A. Friedman,

Deputy Commissioner for Operations.

[FR Doc. 98–19175 Filed 7–17–98; 8:45 am]

BILLING CODE 4160–01–F

DEPARTMENT OF HEALTH AND HUMAN SERVICES

Health Care Financing Administration

[Document Identifier: HCFA–P0015S]

Agency Information Collection Activities: Proposed Collection; Comment Request

In compliance with the requirement of section 3506(c)(2)(A) of the Paperwork Reduction Act of 1995, the Health Care Financing Administration (HCFA), Department of Health and Human Services, is publishing the following summary of proposed collections for public comment. Interested persons are invited to send comments regarding the burden estimate or any other aspect of this collection of information, including any of the following subjects: (1) the necessity and utility of the proposed information collection for the proper performance of the agency's functions; (2) the accuracy of the estimated burden; (3) ways to enhance the quality, utility, and clarity of the information to be collected; and (4) the use of automated collection techniques or other forms of information technology to minimize the information collection burden.

Type of Information Collection Request: Revision of a currently approved collection; *Title of Information Collection:* Medicare Current Beneficiary Survey: National Baseline Medicare Beneficiary Knowledge Supplement; *Form No.:* HCFA–P–0015S; *Use:* This survey will establish baseline measures of Medicare beneficiary knowledge/understanding of the Medicare program, their new choices legislated under the Balanced Budget Act (BBA) which will allow HCFA to quantify current knowledge and attribute future changes in their understanding and knowledge to HCFA information and education initiatives. *Frequency:* Biennially; *Affected Public:* Business or other for-profit; *Number of Respondents:* 16,000; *Total Annual Responses:* 16,000; *Total Annual Hours:* 2,667.

To obtain copies of the supporting statement for the proposed paperwork collections referenced above, E-mail your request, including your address and phone number, to Paperwork@hcfa.gov, or call the Reports Clearance Office on (410) 786–1326. Written comments and recommendations for the proposed information collections must be mailed within 60 days of this notice directly to the HCFA Paperwork Clearance Officer designated at the following address:

HCFA, Office of Information Services, Security and Standards Group, Division of HCFA Enterprise Standards, Attention: John Rudolph, Room C2–26–17, 7500 Security Boulevard, Baltimore, Maryland 21244–1850.

Dated: July 9, 1998.

John P. Burke III,

HCFA Reports Clearance Officer, Division of HCFA Enterprise Standards, Security and Standards Group, Health Care Financing Administration.

[FR Doc. 98–19255 Filed 7–17–98; 8:45 am]

BILLING CODE 4120–03–P

DEPARTMENT OF HEALTH AND HUMAN SERVICES

Health Care Financing Administration

[Document Identifier: HCFA–21, 21B, 21P, 21.11A, 21E]

Agency Information Collection Activities: Proposed Collection; Comment Request

In compliance with the requirement of section 3506(c)(2)(A) of the Paperwork Reduction Act of 1995, the Health Care Financing Administration (HCFA), Department of Health and Human Services, is publishing the following summary of proposed collections for public comment. Interested persons are invited to send comments regarding the burden estimate or any other aspect of this

collection of information, including any of the following subjects: (1) The necessity and utility of the proposed information collection for the proper performance of the agency's functions; (2) the accuracy of the estimated burden; (3) ways to enhance the quality, utility, and clarity of the information to be collected; and (4) the use of automated collection techniques or other forms of information technology to minimize the information collection burden.

Type of Information Collection Request: New Collection;

Title of Information Collection: Children's Health Insurance Program (CHIP) Budget and Expenditure System State Reporting Forms.

Form Nos.: HCFA–21, 21B, 21P, 21.11A, 21E;

Use: These forms will be used by State CHIP agencies to report CHIP program budget projections and actual CHIP program benefits and administrative expenditures, and the numbers of children being served in the CHIP program, to the Health Care Financing Administration (HCFA). The information provided by these new forms will be used by HCFA to prepare the grant awards to States for the CHIP, to ensure that the appropriate level of Federal payments for State expenditures under the CHIP are made in accordance with the CHIP-related BBA legislative provisions of 1997, and to track, monitor, and evaluate the numbers of children being served by the CHIP.

Note: at this time Form HCFA–21E of this package is for States to report the numbers of children, by service delivery system, that are served in the States' CHIPs based on age categories. However, we are continuing to work with the States to develop an appropriate format for States to report the numbers of children, by service delivery system, that are served in the CHIP based on Federal poverty income level categories and under the age categories previously requested. When this format is finalized it will be incorporated into Form HCFA–21E.

For a short description of the CHIP reporting forms, see below:

- Form HCFA–21 Summary Sheet. Quarterly Children's Health Insurance Program Statement of Expenditures for Title XXI Summary Sheet. This form summarizes the total expenditures in the State's CHIP reported by the State for the reporting quarter.
- Form HCFA–21. Children's Health Expenditures by Type of Service for the Title XXI Program, Expenditures in this Quarter. States use this form to report CHIP current quarter expenditures in accordance with services categories authorized under title XXI.
- Form HCFA–21B. Children's Health Insurance Program Budget Report for the Title XXI Program State Expenditure Plan. States use this form to report their budget projections each quarter for their Title XXI CHIPs for the current and budget Federal fiscal years and broken out by quarter.
- Form HCFA–21P. Children's Health Expenditures by Type of Service for the Title XXI Program, Prior Period Adjustments. States use this form to report CHIP prior period adjustment expenditures claimed in the submission quarter in accordance with services categories authorized under title XXI.
- Form HCFA–21.11A. Provider-Related Donations and Health Care Related Taxes, Fees, and Assessments Received Under Section 1903(w) for Title XXI. States use this form to report CHIP-related State receipts of provider related donations, and health care related taxes, fees, and assessments.
- Form HCFA–21E. Children's Health Insurance Program, Number of Children Served. States use this form to report the numbers of children, by service delivery system, that are served in the States' CHIPs based on age categories.

Note: HCFA is working with States to develop an appropriate format for States to report numbers of children, by service delivery system, that are served in the CHIP based on Federal poverty income level categories and under the age categories previously requested. When the format is finalized it will be incorporated into this form.

Frequency: Quarterly;

Affected Public: State and Federal government;

Number of Respondents: 56;

Total Annual Responses: 224;

Total Annual Hours: 7,840.

To obtain copies of the supporting statement for the proposed paperwork collections referenced above, access HCFA's WEB SITE ADDRESS at http://www.hcfa.gov/regs/prdact95.htm, or E-mail your request, including your address and phone number, to Paperwork@hcfa.gov, or call the Reports Clearance Office on (410) 786–1326. Written comments and recommendations for the proposed information collections must be mailed within 60 days of this notice directly to the HCFA Paperwork Clearance Officer designated at the following address: HCFA, Office of Information Services, Security and Standards Group, Division of HCFA Enterprise Standards, Attention: John Rudolph, Room C2–26–17, 7500 Security Boulevard, Baltimore, Maryland 21244–1850.

Dated: July 9, 1998.

John P. Burke III,

HCFA Reports Clearance Officer, Division of HCFA Enterprise Standards, Security and Standards Group, Health Care Financing Administration.

[FR Doc. 98–19256 Filed 7–17–98; 8:45 am]

BILLING CODE 4120–03–P

DEPARTMENT OF HEALTH AND HUMAN SERVICES

Health Care Financing Administration

[Document Identifier: HCFA–P–11]

Agency Information Collection Activities: Submission for OMB Review; Comment Request

In compliance with the requirement of section 3506(c)(2)(A) of the Paperwork Reduction Act of 1995, the Health Care Financing Administration (HCFA), Department of Health and Human Services, has submitted to the Office of Management and Budget (OMB) the following proposal for the collection of information. Interested persons are invited to send comments regarding the burden estimate or any other aspect of this collection of information, including any of the following subjects: (1) The necessity and utility of the proposed information collection for the proper performance of the agency's functions; (2) the accuracy of the estimated burden; (3) ways to enhance the quality, utility, and clarity of the information to be collected; and (4) the use of automated collection techniques or other forms of information technology to minimize the information collection burden.

Type of Information Collection Request: Extension of a currently approved collection; *Title of Information Collection:* Medicare Home Health Quality Assurance Demonstration and Supporting Regulations 42 CFR 484.48; *Form No.:* HCFA—P–11, OMB # 0938–0519; *Use:* Do to the accelerated growth in the home health Care industry, the Health Care Financing Administration (HCFA) has identified a need to measure the effectiveness of home health services by analyzing patient outcomes. The Medicare Home Health Quality Assurance Demonstration will test the feasibility of collecting patient outcome data in Medicare-certified Home Health Agencies (HHAs) nationally. *Frequency:* On occasion; *Affected Public:* Not-for-profit institutions, business or other for-profit, and individuals or households; *Number of Respondents:* 35,905; *Total Annual Responses:* 99,825; *Total Annual Hours:* 7,697.

To obtain copies of the supporting statement for the proposed paperwork collections referenced above, E-mail your request, including your address and phone number, to Paperwork@hcfa.gov, or call the Reports Clearance Office on (410) 786–1326. Written comments and recommendations for the proposed information collections must be mailed within 30 days of this notice directly to the OMB Desk Officer designated at the following address: OMB Human Resources and Housing Branch, Attention: Allison Eydt, New Executive Office Building, Room 10235, Washington, DC 20503.

Dated: July 9, 1998.

John P. Burke III,

HCFA Reports Clearance Officer, HCFA, Office of Information Services, Security and Standards Group, Division of HCFA Enterprise Standards.

[FR Doc. 98–19257 Filed 7–17–98; 8:45 am]

BILLING CODE 4120–03–P

DEPARTMENT OF HEALTH AND HUMAN SERVICES

National Institute of Health

Government-Owned Inventions; Availability for Licensing: Compound, Composition and Method for Treating Cancer

AGENCY: National Institutes of Health, Public Health Service, DHHS.

ACTION: Notice.

SUMMARY: The National Institutes of Health is seeking licensees for the further development, evaluation and commercialization of materials and methods for a novel cancer treatment strategy. The invention claimed in DHHS reference No. E–013–96/0, ''Compound, Composition and Method for Treating Cancer,'' (Hartman, N., *et al.*) filed on 3 June 1996 as USSN 60/019,086, and in corresponding international filings, is available for licensing (in accordance with 35 U.S.C. 207 and 37 CFR Part 404).

ADDRESSES: Questions about the licensing opportunity should be addressed to Girish C. Barua, Ph.D., Office of Technology Transfer, National Institutes of Health, 6011 Executive Boulevard, Suite 325, Rockville, Maryland 20852–3804; Telephone: 301/496–7056 ext. 263; Fax: 301/402–0220.

SUPPLEMENTARY INFORMATION: The invention is a novel compound for treating cancer, Demethylpenclomedine, which is a derivative of the drug Penclomedine. Penclomedine is already under investigation for its remarkable preclinical activity against breast cancer, but it suffers from several dose-limiting side effects. The invention, Demethylpenclomedine, appears to have reduced toxicity while still having a similar therapeutic efficacy to that of Penclomedine in animal models.

Demethylpenclomedine may thus prove to be a useful chemotherapeutic against breast cancer and other cancers. The lower toxicity may allow use at higher levels than have been tried with Penclomedine, and other possible cancers, such as brain tumors, could be targeted.

Information about the patent application and pertinent information not yet publicly described can be obtained under a Confidential Disclosure Agreement. Respondees interested in licensing the invention will be required to submit an Application for License to Public Health Service Inventions.

Dated: July 6, 1998.

Jack Spiegel,

Director, Division of Technology Development and Transfer, Office of Technology Transfer.

[FR Doc. 98–19145 Filed 7–17–98; 8:45 am]

BILLING CODE 4140–01–M

DEPARTMENT OF HEALTH AND HUMAN SERVICES

National Institutes of Health

Government-Owned Inventions; Availability for Licensing

AGENCY: National Institutes of Health, Public Health Service, DHHS.

ACTION: Notice.

SUMMARY: The inventions listed below are owned by agencies of the U.S. Government and are available for licensing in the U.S. in accordance with 35 U.S.C. 207 to achieve expeditious commercialization of results of federally-funded research and development. Foreign patent applications are filed on selected inventions to extend market coverage for companies and may also be available for licensing.

ADDRESSES: Licensing information and copies of the U.S. patent applications listed below may be obtained by writing to the indicated licensing contact at the Office of Technology Transfer, National Institutes of Health, 6011 Executive Boulevard, Suite 325, Rockville, Maryland 20852–3804; telephone: 301/496–7057; fax: 301/402–0220. A signed Confidential Disclosure Agreement will be required to receive copies of the patent applications.

Murine Intracisternal a Particle Constitutive Transport Elements and Uses Thereof

BK Felber, C Tabernero, AS Zolotukhin (NCI)

Serial No. 60/070,204 filed 31 Dec 97

Licensing Contact: Robert Benson, 301/496–7056 ext. 267

This invention concerns recombinant attenuated HIV strains useful as vaccines. HIV regulates its expression by controlling the nuclear transport of unspliced mRNA encoding structural proteins. HIV utilizes the Rev/RRE system. RRE (Rev. Responsive Element) is an HIV encoded nucleo-cytoplasmic transport element (NCTE), which is part of every HIV RNA encoding the structural genes (gas/pol and env). Rev is an HIV encoded protein which binds to the RRE. This interaction is essential for the nucleo-cytoplasmic transport of the RRE-containing viral mRNAs and the expression of Gap/Pol and Env proteins. The inventors have produced an attenuated HIV by disabling rev/RRE, by point mutations, and inserting in its place a novel murine NCTE, isolated form an intracisternal A-type particle (IAP). The resultant HIV is attenuated between 50 and 200 fold compared to wild-type HIV. Claimed are the novel murine NCTE, recombinant retroviruses comprising the NCTE, and vaccines. The use of another NCTE is described in Zolotukhin *et al.*, (1994) J. Virology 68:7944–7952.

Design and Construction of Non-Infectious Human Retroviral Mutants Deficient in Genomic RNA

RJ Gorelick, LO Arthur, A Rein, LE Henderson, S Oroszlan (NCI)

U.S. Patent No. 5,674,720 issued 07 Oct 97

Licensing Contract: Robert Benson, 301/496–7056 ext. 267

This invention describes methods for generating non-replicating (i.e. non-infectious) virus-like particles that mimic HIV–1, SIV and other retroviruses, which are capable of generating a protective immune response. In addition to being replication defective, these virus like particles are deficient in packaged genomic RNA but have the added benefit of a normal compliment of viral and cellular proteins that remain in their native conformations. Also claimed are methods of making the mutant retroviruses which may potentially be used as immunogens for vaccines, particularly against HIV–1. The basis of the method and the mutant viruses of the claims is the finding that a conserved amino acid sequence motif, found in the nucleocapsid domain of

the Gag precursor polyprotein of all retroviruses, when mutated resulted in virions with much lower or zero infectivity. This concept has been tested in the primate lentivirus, SIV, which is related to HIV–1. Mutations were introduced into the gene coding for the conserved sequence motif found in the nucleocapsid domain of the Gag precursor polyprotein of SIV. The viruses obtained upon transfection were defective in replication. Plasmid DNA containing the mutated provirus was injected into five pig tailed macques and the vector without the provirus was injected into four control animals. The vaccinated animals were either partially or fully protected when challenged with infectious SIV(Mne) whereas three of the four control animals became persistently infected and developed AIDS as indicated by a marked decline in CD4 cell numbers. The invention has been filed in foreign countries and has been granted in Europe (No. 91900636.1) and Japan (No. Hei 7–16420).

The Application of Induction Tolerance by Oral Feeding of Myelin Basic Protein to the Generation of Increased Resistance to Stroke

KJ Becker, JM Hallenbeck, RM McCarron (NINDS)
Serial No. 08/994,293 filed 19 Dec 97
Licensing Contact: Stephen Finley, 301/496–7735 ext. 215

In vivo experiments have shown that immunosuppression in the brain can be achieved through oral tolerance to myelin basic protein (MBP). Following exposure to MBP again which has the effect of suppressing the inflammatory reaction associated with stroke. This possible new means of minimizing the severity of damage from stroke, the number three killer of Americans and leading cause of disability, does not result in detrimental systemic side effects as other immunosuppressive agents do. This treatment could be administered to those considered at significantly increased risk for a stroke including those with a previous stroke, diabetes mellitus, hypertension, hypercholesteremia, or a history of smoking as well as those undergoing a medical or surgical treatment which increases the possibility of an ischemic event.

Salivary Prolactin Test for Serotonergic Activity

JD Higley (NIAAA), S Lindell (NICHD)
Serial No. 60.082,126 filed 16 April 98
Licensing Contact: Stephen Finley, 301/496–7735 ext. 215

A noninvasive diagnostic assay improves on previous methods for determining central serotonin functioning, an indicator of susceptibility to aggression, alcohol abuse, obsessive-compulsive disorder and eating disorders. Levels of salivary prolactin can be assayed to determine susceptibility to the set of pysychiatric disorders related to central serotonin functioning. Levels of salivary prolactin were found to be positively correlated with levels of cerebrospinal fluid (CSF) 5-hydroxyindol acetic acid (5-HIAA), the current measurement of central serotonin functioning. Elevated CSF levels of 5-HIAA are associated with obsessive-compulsive disorders, and reduced levels are associated with violent behavior, alcohol abuse and bulimia. There are an estimated 9 million alcoholics in the United States and currently 0.5% of women 10 to 30 years old have anorexia nervosa while 5% of college-age women have bulimia. The user-friendliness and reduced costs of the saliva assay suggest possible candidacy for mass screenings to determine susceptibility to various psychiatric disorders.

Conjugate Vaccine for *Salmonella Paratyphi* A

E Konadu and S Szu (NICHD)
Serial No. PCT/US96/19978 filed 18 Dec 96
Licensing Contact: Robert Benson, 301/496–7056 ext. 267

This invention concerns a conjugate vaccine against *Salmonella paratyphi* A comprising the o-specific polysaccharide bound to a carrier protein. *Salmonella paratyphi* A infection causes enteritis and enteric fever. The emergence of multidrug resistant strains has raised alarms. The present invention offers a method of preventing the disease. The conjugate is made by isolating lipopolysaccharide, detoxifying by removing the lipid A, while retaining substantially all the O-acetyl groups, and conjugating by known means to a carrier protein such as tetanus toxoid or detoxified exoprotein A. In a Phase I clinical trial the vaccine has been given to healthy adults and elicited anti-LPS IgG levels at least 4-fold higher compared to preimmune serum in 85% of volunteers. The invention is also described in Konadu *et al.*, Infection and Immunity 64(7), 2709–2715, 1996.

Cloning of GMEB 1 and 2: Two Proteins Involved in the Modulation of Glucocorticoid Regulated Gene Transcription

S. Stoney Simons, Jr., *et al.* (NIDDK)
DDH Reference No. E–070–97/0 filed 25 Jul 97
Licensing Contact: Charles Maynard, 301/496–7735 ext. 243

This technology relates to a previously identified DNA element from a naturally occurring gene that has the properties of causing glucocorticoid induction at lower steroid concentrations than for other glucocorticoid inducible genes in the same cell. This DNA element, also called a glucocorticoid modulatory element, or GME, has been found to involve two proteins of 88 and 67 kDa.

This technology has succeeded in cloning and characterizing both the 67 kDa protein and the 88 kDa protein which together offer a unique and not previously described method of using genetic engineering to achieve selective regulation of glucocorticoid responsive genes. This group of proteins appears to be members of a larger class of related proteins which may have similar roles in modifying the activity of RNA polymerase II transcriptional complex.

Gated RF Preamplifier for Use in Pulsed Radiofrequency Electron Paramagnetic Resonance and MRI

RG Tschudin (NIDDK), R Murugesan (NCI), MK Cherukuri (NCI), JB Mitchell (NCI), S Subramanian (NCI)
Serial No. 08/699,383 filed 19 Aug 96
Licensing Contact: John Fahner-Vihtelic, 201/496–7735 ext. 270

The present application describes a radiofrequency preamplifier featuring very fast recovery after the transmit cycle to allow for ultrafast data acquisition, intended for use in pulsed EPR, MRI and related computed imaging applications. One advantage of this device is that it allows the use of low frequency EPR, which offers better tissue penetration during *in vivo* diagnostic studies. The invention permits the use of a pulsed EPR method, which offers improved speed and sensitivity over existing methods. A prototype device has been made and the design has proven to work in an EPR system.

Lipopolysaccharide Carriers for Use in Vaccines

B Golding (FDA)
Serial No. 08/369,565 filed 06 Jan 95 (allowed)
Licensing Contact: Robert Benson, 301/496–7056 ext. 267

This invention is a new carrier for conjugate vaccines. The carrier is lipopolysaccharide (LPS) isolated from Brucella abortus (BA). The claims of the patent cover all conjugates comprising BA–LPS and an antigen from an infectious agent or tumor. BA–LPS, like other LPSs from gram-negative bacteria,

raises antibody responses in a T-independent fashion, which allows antibodies to be raised in the absence of T cell help. BA–LPS is much less toxic than LPS from other bacteria, and is much less potent than other bacterial LPS in including inflammatory cytokines. Thus, BA–LPS is much less likely to cause endotoxic shock. There are no foreign patent rights. The invention is further described in Infection & Immunity 61(5), pp. 1722–1729, 1993.

Dated: July 6, 1998.

Jack Spiegel,

Director, Division of Technology Development and Transfer, Office of Technology Transfer.

[FR Doc. 98–19146 Filed 7–17–98; 8:45 am]

BILLING CODE 4140–01–M

DEPARTMENT OF THE INTERIOR

Fish and Wildlife Service

Aquatic Nuisance Species Task Force Meeting

AGENCY: Fish and Wildlife Service, Interior.

ACTION: Notice of meeting.

SUMMARY: This notice announces the Summer 1998 meeting of the Aquatic Nuisance Species Task Force. Meeting topics are identified in the **SUPPLEMENTARY INFORMATION**.

DATES: The Aquatic Nuisance Species Task Force will meet from 8:30 a.m. to 5:00 p.m., Wednesday, July 22, 1998.

ADDRESSES: The meeting will be held at Arlington Square Building, Room 200, 4401 North Fairfax Drive, Arlington, Virginia.

FOR FURTHER INFORMATION CONTACT: Bob Peoples, Executive Secretary, Aquatic Nuisance Species Task Force, 703–358–2025.

SUPPLEMENTARY INFORMATION: Pursuant to section 10(a)(2) of the Federal Advisory Committee Act (5 U.S.C. App. I), this notice announces a meeting of the Aquatic Nuisance Species Task Force. The Task Force was established by the Nonindigenous Aquatic Nuisance Prevention and Control Act of 1990.

Topics to be covered during the meeting include review of Task Force membership and regional panel configuration, the future of the ANS Digest, brown tree snake actions and plans, the voluntary national recreational activity guidelines for submission to the U.S. Coast Guard, a summary of Task Force staff activities, regional panel updates, and reports about or from the voluntary national ballast water guidelines and regulatory changes, recommendations of the Forum on Ecological Surveys, the Green Crab Control Proposal Review Committee, and recommendations from the Marine Conservation Biology Institute's Workshop on Marine Invasive Species.

Minutes of the meeting will be maintained by the Executive Secretary, Aquatic Nuisance Species Task Force, Suite 851, 4401 North Fairfax Drive, Arlington, Virginia 22203–1622, and will be available for public inspection during regular business hours, Monday through Friday, within 30 days following the meeting.

Dated: July 9, 1998.

Gary Edwards,

Co-Chair, Aquatic Nuisance Species Task Force, Assistant Director—Fisheries.

[FR Doc. 98–19156 Filed 7–17–98; 8:45 am]

BILLING CODE 4310–55–M

DEPARTMENT OF THE INTERIOR

Bureau of Land Management

[AZ–050–08–1210–04; 1617]

Arizona: Intent To Prepare a Resource Management Plan Amendment (Wild Horse and Burro Herd Management Area) and Environmental Assessment

AGENCY: Bureau of Land Management, Interior.

ACTION: Notice of Intent To Prepare a Resource Management Plan Amendment/Environmental Assessment and Invitation to Participate in the Identification of Issues; Yuma Field Office, AZ.

SUMMARY: The Bureau of Land Management (BLM), Yuma Field Office, is preparing an Amendment/Environmental Assessment to the Yuma District Resource Management Plan to revise wild horse and burro management provisions. The proposed Amendment would update management provisions for the Cibola-Trigo Herd Management Area in conformance with the Wild Free-Roaming Horse and Burro Act, as amended, (16 U.S.C. 1331–1340) 1994. Under the proposed Amendment, horses and burros would be managed to maintain an appropriate management level that will provide for a thriving natural ecological balance within the Cibola-Trigo Herd Management Area south of Interstate 10 and west of the impact area from the Yuma Proving Ground firing range located near Highway 95, at the southern portion of the military reservation.

DATES: Written comments related to the identification of issues for the proposed Amendment will be accepted on or before August 19, 1998. A public meeting will be held on August 19, 1998, from 7:00 to 9:00 p.m. at the BLM office, 2555 Gila Ridge Road, Yuma, Arizona, to provide additional opportunity for the identification of issues.

ADDRESSES: Send comments to: Ron Morfin, BLM Yuma Field Office, 2555 Gila Ridge Road, Yuma, Arizona 85365.

FOR FURTHER INFORMATION CONTACT: Ron Morfin, Planning Team Leader, Yuma Field Office, Yuma, Arizona. Telephone (520) 317–3226.

SUPPLEMENTARY INFORMATION: The BLM Yuma Field Office is currently coordinating efforts with the U.S. Fish and Wildlife Service, U.S. Army Yuma Proving Ground, and Arizona Game and Fish Department to develop a cooperative management plan for lands and resources contained within the Cibola-Trigo Wild Horse and Burro Herd Management Area through an interdisciplinary planning team. Considering other land and resource values and multiple uses and to provide for a thriving natural ecological balance, management objectives and direction will be proposed for wild horse and burro herds through this effort to reach and maintain the appropriate management level as established by the Cibola-Trigo Herd Management Area Plan. National BLM Policies and guidance at 43 CFR 4700 require that management direction affecting wild horses and burros shall be established through the Land Use Planning Process pursuant to 43 CFR 1600.

Issues to be addressed include: the presence of burros at impact areas from a munitions research and development firing range; management of animals outside of the herd area; management of the current horse and burro herd to reach and maintain an appropriate management level; provisions for refining forage utilization monitoring protocols; and the use of new technologies to monitor herd size.

Documents relevant to the planning process will be available for public review at the BLM Yuma Field Office, 2555 Gila Ridge Road, Yuma, Arizona. This notice is published under the authority found in 43 CFR 1610.2(c).

Dated: July 8, 1998.

Maureen A. Merrell,

Assistant Field Manager, Business and Fiscal Services/Acting Field Manager.

[FR Doc. 98–19252 Filed 7–17–98; 8:45 am]

BILLING CODE 4310–32–P

DEPARTMENT OF THE INTERIOR

Minerals Management Service

Agency Information Collection Activities: Approved Collection

AGENCY: Minerals Management Service (MMS), Interior.

ACTION: Notice of approval of information collection (1010–0051).

SUMMARY: As part of its continuing effort to reduce paperwork and respondent burden, this notice informs the public and other Federal agencies of the approval by the Office of Management and Budget (OMB) of a collection of information. The Paperwork Reduction Act of 1995 (PRA) provides that an agency may not conduct or sponsor, and a person is not required to respond to, a collection of information unless it displays a currently valid OMB control number.

FOR FURTHER INFORMATION CONTACT: Alexis London, Rules Processing Team, telephone (703) 787–1600. You may also contact Alexis London to obtain a copy of this collection of information.

SUPPLEMENTARY INFORMATION:

Title: 30 CFR Part 250, Subpart L, Oil and Gas Production Measurement, Surface Commingling, and Security.

Abstract: On May 12, 1998, MMS published a final rule on the titled collection (RIN 1010–AC23, 63 FR 26362). A correction to the final rule on May 20, 1998 (63 FR 27677) made the rule effective on June 29, 1998. The Paperwork Reduction Act section of the preamble to the final rule stated that the information collection requirements would not take effect until approved by OMB. The preamble to the final rule provided the required public comment period and announced that we had submitted the information collection request to OMB for approval. On July 7, 1998, OMB approved the collection of information required in 30 CFR 250, subpart L, with an expiration date of July 31, 2001.

MMS Information Collection Clearance Officer: Jo Ann Lauterbach (202) 208–7744.

Dated: July 10, 1998.

William S. Cook,

Acting Chief, Engineering and Operations Division.

[FR Doc. 98–19254 Filed 7–17–98; 8:45 am]

BILLING CODE 4310–MR–P

DEPARTMENT OF THE INTERIOR

National Park Service

Correction; Grand Canyon National Park; Concession Contract for Operation of Accommodations, Facilities, and Services at Grand Canyon National Park (South Rim)

CORRECTION: In notice document 98–15128, appearing on pages 31228-31229, in the issue of Monday, June 8, 1998, the **SUPPLEMENTARY INFORMATION** is corrected to read as follows:

SUPPLEMENTARY INFORMATION: This contract renewal has been determined to be categorically excluded from the procedural provisions of the National Environmental Policy Act and no environmental document will be prepared.

The existing concessioner has performed its obligation to the satisfaction of the Secretary under an existing contract, which expires by limitation of time on December 31, 1998. Therefore, pursuant to the provisions of Section 5 of the Act of October 9, 1965 (79 Stat. 969; 16 U.S.C. 20), the concessioner is entitled to be given preference in the renewal of the contract and in the award of a new contract, providing that the existing concessioner submits a responsive offer (a timely offer which meets the terms and conditions of the Prospectus). This means that the contract will be awarded to the party submitting the best offer, provided that if the best offer was not submitted by the existing concessioner, then the existing concessioner will be afforded the opportunity to match the best offer. If the existing concessioner agrees to match the best offer, then the contract will be awarded to the existing concessioner.

If the existing concessioner does not submit a responsive offer, the right of preference in renewal shall be considered to have been waived, and the contract will then be awarded to the party that has submitted the best responsive offer.

The Secretary will consider and evaluate all offers received as a result of this notice. Any offer, including that of the existing concessioner, must be received by the Regional Director, Intermountain Region, P.O. Box 25287, Denver, Colorado 80225–0287 (street address: 12795 West Alameda Parkway, Lakewood, Colorado 80228); no later than one hundred and twenty (120) days following release of the Prospectus to be considered and evaluated.

Dated: July 7, 1998.

Michael D. Snyder,

Acting Director, Intermountain Region.

[FR Doc. 98–19149 Filed 7–17–98; 8:45 am]

BILLING CODE 4310–70–P

DEPARTMENT OF THE INTERIOR

National Park Service

Notice of Availability of Reference Manual Concerning Wilderness Preservation and Management Within the National Park Service

AGENCY: National Park Service, Interior.

ACTION: Public notice.

SUMMARY: The National Park Service (NPS) is converting and updating its current system of internal instructions to a three-level system consisting of: (1) NPS Management Policies; (2) Director's Orders; and (3) Reference Manuals/Handbooks and other helpful information. When these documents contain new policy or procedural requirements that may affect parties outside the NPS, this information is being made available for public comments. Reference Manual #41 establishes operation policies and procedural guidance for the day-to-day and long-term preservation and management of the Service's wilderness resources.

DATES: Written comments will be accepted until August 17, 1998.

ADDRESSES: The draft Reference Manual #41 is available on the Internet at: http://www.nps.gov/refdesk/Dorders/index.htm. The specific link can subsequently be reached at: ''Dorder41.htm''. Requests for copies and written comments should be sent to Jim Walters, National Park Service Deputy Wilderness Program Coordinator, National Park Service, P.O. Box 728 Santa Fe, New Mexico 87504–0728.

FOR FURTHER INFORMATION CONTACT: Jim Walters at 509 988–6022 (fax)(505 988–6123 or Wes Henry at 202 208–5211.

SUPPLEMENTARY INFORMATION:

Table of Contents: Reference Manual #41: Wilderness Preservation and Management.

I. Background and Purpose

The purpose of Reference Manual #41: Wilderness Preservation and Management is to provide national park managers with the information they need to understand the laws and policies affecting the NPS wilderness resource and guidance for the application of the edicts into the day-to-day and long-term preservation of these

resources. The Reference Manual contains: (1) An update of the NPS Management Policies pertaining to wilderness; (2) the Director's Orders intended to assist managers in the application of these policies, and (3) specific detailed references and background information affecting the Service's wilderness resource.

II. Legislative Guidance Applicable To NPS Wilderness Preservation

This information is intended to provide park managers and the public with an understanding of the primary laws regulating the wilderness resource. This discussion includes: the relationship between the Wilderness Act and the NPS Organic Act, the clarification of Section 4(a)(3) of the Wilderness ACt which is often misinterpreted by park managers, the implication of the Redwood Act Amendments to the Service's wilderness program, and an explanation of the Eastern Wilderness Act as it applies to the National Park Service.

III. Revised Management Policies Guiding Wilderness Preservation and Management (Level One)

The ''Level One'' wilderness policy statements will revise and update previous policies included in Chapter 6 of the 1988 Wilderness Policies handbook. These revised policies include general statements addressing: wilderness characteristics and values, the process for reviewing potential wilderness additions, general wilderness policies, consistency of the Service's wilderness program, zoning, accountability and responsibility, management plans, the minimum requirement process, monitoring strategies, signing, research protocols, NPS administrative facilities, fire management, cultural resources, environmental compliance standards, general public use, commercial services, special events, grazing and livestock driveways, rights-of-way and mineral development and public education standards.

IV. Director's Order #41 (Level Two)

The ''Level Two'' Director's Order are intended as more detailed guidance and standards for managers to use in the application of the revised policy statements. Director's Order #41 will be issued by the NPS Associate Director—Operations and Parks as required standards at which the respective programs and functions must be managed within NPS wilderness. These program, identified as ''Critical Issues'' include: wilderness management plan requirements, procedures for applying the ''minimum requirement'' concept, interagency coordination, cultural resource management, climbing protocols, fire management, interpretation and education, mineral development, research and other scientific uses, wilderness use by persons with disabilities, special events, training requirements, and the administration of commercial services in wilderness.

IV. Appendices

The appendices of the Level 3 Reference Manual are intended as a reference and bibliography for wilderness managers. This information includes: a glossary of wilderness terms, the text of the Wilderness Act, the Wilderness *Access Decision Tool,* examples of minimum requirement decision tools, the minimum requirements of a wilderness management plan, the Alaska National Interest Lands Conservation Act, the format of the annual Report to Congress, and a list of suggested readings relating to wilderness management.

Dated: July 10, 1998.

Maureen Finnerty,

Associate Director, Operations and Education.

[FR Doc. 98–19151 Filed 7–17–98; 8:45 am]

BILLING CODE 4310–70–M

DEPARTMENT OF THE INTERIOR

National Park Service

Notice of the Intent to Issue a Prospectus for the Operation of Commercial Visitor Services Within Carlsbad Caverns National Park

SUMMARY: The National Park Service will be releasing a concession Prospectus authorizing continued operation of food and beverage, merchandise (souvenir and gifts), kennels and storage lockers services for the public within Carlsbad Caverns National Park, New Mexico. The operation consists of providing these services at one location in the park. The proposed operation will be provided on a daily basis year round. The term of the proposed concession contract will be for ten (10) years beginning on January 1, 1999.

EFFECTIVE DATE: Offers will be accepted for SIXTY (60) days under the terms described in the Prospectus. The SIXTY day application period will begin with the release of the Prospectus, which will occur within thirty days of the publication of this notice. The actual release date of the Prospectus shall be the date of publication in the ''Commerce Business Daily''.

SUPPLEMENTARY INFORMATION: This contract renewal has been determined to be categorically excluded from the procedural provisions of the National Environmental Policy Act and no environmental document will be prepared.

The existing concessioner has performed its obligations to the satisfaction of the Secretary under an existing contract, which expires by limitation of time on December 31, 1998. Therefore, pursuant to the provision of Section 5 of the Act of October 9, 1965 (79 Stat. 969; 16 U.S.C. sec. 20), the concessioner is entitled to be given preference in the renewal of the contract and in the award of a new contract, providing that the existing concessioner submits a responsive offer (a timely offer which meets the terms and conditions of the Prospectus). This means that the contract will be awarded to the party submitting the best offer, provided that if the best offer was not submitted by the existing concessioner, then the existing concessioner will be afforded the opportunity to match the best offer. If the existing concessioner agrees to match the best offer, then the contract will be awarded to the existing concessioner.

If the existing concessioner does not submit a responsive offer, the right of preference in renewal shall be considered to have been waived, and the contract will then be awarded to the party that has submitted the best responsive offer.

The Secretary will consider and evaluate all offers received as a result of this notice. Any offer, including that of the existing concessioner, must be received by the Regional Director, Intermountain Region, P.O. Box 25287, Denver, Colorado 80225–0287 (street address; 12795 West Alameda Parkway, Lakewood, Colorado 80228); not later than SIXTY (60) days following release of the Prospectus to be considered and evaluated.

ADDRESSES: Parties interested in obtaining a copy should contact the National Park Service, Concessions Management Program, Intermountain Region-Denver Support Office, Office of Concessions Management, 12795 West Alameda Parkway, P.O. Box 25287, Denver, Colorado 80225–0287; Attention: Judy Jennings. Please include a mailing address indicating where to send the Prospectus in your request. Inquires may be directed to Ms. Judy Jennings, Office of Concessions Management Program (303) 969–2661.

Dated: July 1, 1998.

John H. King,

Acting Regional Director, Intermountain Region.

[FR Doc. 98–19148 Filed 7–17–98; 8:45 am]

BILLING CODE 4310–70–P

DEPARTMENT OF THE INTERIOR

National Park Service

Meeting of the Delta Region Preservation Commission

AGENCY: National Park Service, Interior.

ACTION: Meeting of the Delta Preservation Commission.

SUMMARY: Notice is hereby given in accordance with the Federal Advisory Committee Act that a meeting of the Delta Region Preservation Commission will be held at the following place and time.

DATES: Wednesday, August 5, 1998 at 7 p.m.

ADDRESSES: The meeting will be held at the Environmental Education Center in the Barataria Preserve Unit of Jean Lafitte National Historical Park and Preserve, 7400 Highway 45, Marrero, Louisiana 70072.

FOR FURTHER INFORMATION CONTACT: Persons wishing further information concerning this meeting, or who wish to submit written statements, may contact Geraldine Smith, Superintendent, Jean Lafitte National Historical Park and Preserve, 365 Canal Street, Suite 2400, New Orleans, Louisiana 70130–1142, telephone (504) 589–3882, extension 108.

SUPPLEMENTARY INFORMATION: The Delta Region Preservation Commission was established pursuant to Section 907 of Public Law 95–625 (16 U.S.C. 230f), as amended, to advise the Secretary of the Interior in the selection of sites for inclusion in Jean Lafitte National Historical Park and Preserve, and in the implementation and development of a general management plan and of a comprehensive interpretive program of the natural, historic, and cultural resources of the region.

The matters to be discussed at this meeting include:

—Old Business
—General Park Update

The meeting will be open to the public. However, facilities and space for accommodating members of the public are limited, and persons will be accommodated on a first-come, first-served basis. Any member of the public may file a written statement concerning matters to be discussed with the Superintendent, Jean Lafitte National Historical Park and Preserve.

Minutes of the meeting will be available for public inspection four weeks after the meeting at the headquarters office of Jean Lafitte National Historical Park and Preserve.

Dated: July 8, 1998.

Daniel W. Brown,

Acting Regional Director, Southeast Region.

[FR Doc. 98–19150 Filed 7–17–98; 8:45 am]

BILLING CODE 4310–70–M

DEPARTMENT OF THE INTERIOR

National Park Service

National Register of Historic Places; Notification of Pending Nominations

Nominations for the following properties being considered for listing in the National Register were received by the National Park Service before July 11, 1998. Pursuant to § 60.13 of 36 CFR Part 60 written comments concerning the significance of these properties under the National Register criteria for evaluation may be forwarded to the National Register, National Park Service, 1849 C St., NW, NC400, Washington, DC 20240. Written comments should be submitted by August 4, 1998.

Beth Savage,

Acting Keeper of the National Register.

Arkansas

Clark County

Henderson, Capt. Charles C., House, Jct. of 10th and Henderson Sts., Arkadelphia, 98000957

Newton County

Jones, Gould, Reservoir, AR 7, just S of Jasper, Jasper, 98000956

California

Alameda County

Berkeley Historic Civic Center District, Roughly bounded by McKinney Ave., Addison St., Shattuck Ave., and Kittredge St., Berkeley, 98000963

Los Angeles County

House at 1011 S. Madison Ave., (Residental Architecture of Pasadena: Influence of the Arts and Crafts Movement MPS), 1011 S. Madison Ave., Pasadena, 98000959

House at 1050 S. Madison Ave., (Residental Architecture of Pasadena: Influence of the Arts and Crafts Movement MPS), 1050 S. Madison Ave., Pasadena, 98000960

House at 1233 Wentworth Ave., (Residental Architecture of Pasadena: Influence of the Arts and Crafts Movement MPS), 1233 Wentworth Ave., Pasadena, 98000962

House at 380 W. Del Mar Blvd., (Residental Architecture of Pasadena: Influence of the Arts and Crafts Movement MPS), 380 W. Del Mar Blvd., Pasadena, 98000961

House at 574 Bellefontaine St. (Residental Architecture of Pasadena: Influence of the Arts and Crafts Movement MPS), 574 Bellefontaine St., Pasadena, 98000958

Connecticut

Hartford County

Old North Cemetery, 1821 Main St., Hartford, 98000964

New Haven County

Nehemiah Royce House, 538 N. Main St., Wallingford, 98000966

Florida

Hillsborough County

Downtown Plant City Historic Residential District, Bounded by N. Drane, Thomas, W. Tever, Franklin, and Carey Sts., Plant City, 98000965

Georgia

Banks County

Fort Hollingsworth—White House, Wynn Lake Rd., 2 mi. SE of Hollingsworth, Hollingsworth vicinity, 98000973

Chatham County

Tybee Island Strand Cottages Historic District, Along Butler Ave., between 12 St. and 14th St., Tybee Island, 98000971

Fulton County

Ashby Street Car Barn, 981 Ashby St. NW, Atlanta, 98000972

Freeman Ford Building, 75 John Wesley Dobbs Ave., Atlanta, 98000968

Greene County

Bethesda Baptist Church and Cemetery, Jct. of Cty Rd. 120 and Cty Rd. 129, Union Point vicinity, 98000967

Newton County

Covington Historic District, Roughly Covington City S of US 278, Covington, 98000969

Newborn Historic District, Roughly the entire city limits of Newborn City, Newborn, 98000970

Hawaii

Honolulu County

Schofield Barracks Stockade, Lyman Rd., Wahiawa vicinity, 98000974

Illinois

Calhoun County

Brussels Historic District, Roughly along Main and Community Sts., Brussels, 98000981

Clay County

Clay County Jail, 195 Main St., Louisville, 98000986

Cook County

Illinois Industrial School for Girls, 733 N. Prospect Ave., Park Ridge, 98000978

Kuppenheimer, Louis B., Jr., House, 777 Burr Ave., Winnetka, 98000980

Grundy County

White and Company's Goose Lake Tile Works, 5010 N. Jugtown Rd., Morris vicinity, 98000976

White and Company's Goose Lake Stoneware Manufactury, 5010 N. Jugtown Rd., Morris vicinity, 98000982

Hardin County

Cave-In-Rock (Caught in the Middle: The Civil War on the Lower Ohio River MPS) 0.5 mi N of the town of Cave-In-Rock, Cave-In-Rock, 98000984

Gallatin County

Camp Mather—Camp Logan (Caught in the Middle: The Civil War on the Lower Ohio River MPS) 10765 IL 13, Shawneetown, 98000983

Jersey County

Fulkerson, Col. William H., Farmstead, 1510 N. State St., Jerseyville vicinity, 98000977

Hamilton Primary School, 200 ft. E of the jct. of Otteville and McClusky Rds., Otterville, 98000975

Sangamon County

Illinois Route 4—North of Auburn, Curran and Snell Rd., Auburn vicinity, 98000979

Lincoln Colored Home, 427 S. Twelfth St., Springfield, 98000985

Louisiana

Washington Parish

Franklinton High School, 617 Main St., Franklinton, 98000988

Greenlaw House, 613 10th Ave., Franklinton, 98000987

Maryland

St. Mary's County

Buena Vista, MD 5, W of jct. of MD 245 and MD 379, Leonardtown, 98000997

Massachusetts

Hampden County

Carreau Block, 640–642 Chicopee St., Chicopee, 98000993

Middlesex County

Brandeis University President's House, 66 Beaumont Ave., Newton, 98000990

Marlborough Center Historic District, Roughly bounded by MA 85, Granger Blvd., Mechanic St., Central St., and Washington St., Marlborough, 98000992

Sleepy Hollow Cemetery, 24 Court Ln., Concord, 98000991

Worcester County

Hubbardston Public Library, 7 Main St., Hubbardston, 98000989

Missouri

St. Louis Independent City

Laclede Building, 408 Olive St., St. Louis, 98000994

New York

Chenango County

Smithville Valley Grange No. 1397, NY 41, Smithville Flats, 98001009

Lewis County

St. Mark's Church (Historic Churches of the Episcopal Diocese of Central New York MPS), Jct. of West Main and Elm Sts., Port Leyden, 98001003

Madison County

Rippleton Schoolhouse, Rippleton Rd., 15 mi. SE of Syracuse, Cazenovia, 98000996

Onondaga County

Oran District No. 22 Schoolhouse, Jct. of NY 92 and Delphi Rd., Oran, 98001002

Pompey Centre District No. 10 Schoolhouse, 8354 US 20, Pompey Center, 98001007

Orange County

Crabtree, John A., House, 15 Factory St., Montgomery, 98001001

Crawford, John I, Farm, NY 302, 1 mi. NE of jct. of NY 302 and Thompson Ridge Rd., Crawford, 98001000

Shorter House, Andrews Rd., Crawford, 98001004

Saratoga County

Copeland Covered Bridge, North Shore Rd., over Beecher Cr., Edinburg, 98000998

Tompkins County

Forest Home Historic District, Roughly along NY392, Forest Home, 98000999

Ulster County

DuBois, Andries, House, 75 Wallkill Ave., Wallkill, 98001011

High Falls Historic District, Roughly along NY 213 and Main St., Marbletown, 98001005

Lock Tender's House and Canal Store Ruin, 40 Canal Rd., High Falls, 98001010

Trinity Episcopal Church Complex, Jct. of Church St. and Barclay St., Saugerties, 98001006

Westchester County

Palmer—Lewis Estate, Black Brook Rd., Bedford vicinity, 98001008

North Carolina

Orange County

Jordan, Dr. Arch, House, 7015 NC 57, Caldwell, 98000995

Ohio

Clermont County

U.S. Grant Birthplace and Grant Commemorative Sites Historic District, NY 232 and US 52, Point Pleasant, 98001013

Coshocton County

Eldridge—Higgins Building, 525 Orange St., Coshocton, 98001012

Hardin County

Ada Pennsylvania Station and Railroad Park, 112 E. Central Ave., Ada, 98001014

Texas

Washington County

Allcorn—Kokemoor Farmstead, Independence Rd., 5 mi. N of Brenham, Brenham vicinity, 98001015

Utah

Salt Lake County

Price, Lorenzo and Emma, House and Barn, 1205 E 1300 S, Salt Lake City, 98001016

Washington

Thurston County

SAND MAN (Tug Boat) (Maritime Related Resources of Budd Inlet MPS), Berth A–108, East Bay Marina Port of Olympia, Olympia, 98001018

Whitman County

Pullman High School, 115 NW State St., Pullman, 98001017

[FR Doc. 98–19261 Filed 7–17–98; 8:45 am]

BILLING CODE 4310–70–P

INTERNATIONAL DEVELOPMENT COOPERATION AGENCY

Overseas Private Investment Corporation

Submission for OMB Review; Comment Request

AGENCY: Overseas Private Investment Corporation, IDCA.

ACTION: Request for comments.

SUMMARY: Under the provisions of the Paperwork Reduction Act (44 U.S.C. Chapter 35), Agencies are required to publish a Notice in the Federal Register notifying the public that the Agency has prepared an information collection request for OMB review and approval and has requested public review and comment on the submission. OPIC published its first **Federal Register** Notice on this information collection request on May 12, 1998, in 63 FR #91, p. 26208, at which time a 60-calendar day comment period was announced. This comment period ended July 13, 1998. No comments were received in response to this Notice.

This information collection submission has now been submitted to OMB for review. Comments are again being solicited on the need for the information, its practical utility, the accuracy of the Agency's burden estimate, and on ways to minimize the reporting burden, including automated collection techniques and uses of other forms of technology. The proposed form under review is summarized below.

DATES: Comments must be received within 30 calendar days of this Notice.

ADDRESSES: Copies of the subject form and the request for review submitted to OMB may be obtained from the Agency Submitting Officer. Comments on the form should be submitted to the OMB Reviewer.

FOR FURTHER INFORMATION CONTACT:

OPIC Agency Submitting Officer: Carol Brook, Records Manager, Overseas Private Investment Corporation, 1100 New York Avenue, NW., Washington, DC 20527; 202/336–8563.

OMB Reviewer: Victoria Wassmer, Office of Information and Regulatory Affairs, Office of Management and Budget, New Executive Office Building, Docket Library, Room 10102, 725 17th Street, NW., Washington, DC 20503, 202/395–5871.

SUMMARY OF FORM UNDER REVIEW:

Type of Request: Revised form.

Title: Project Information Report.

Form Number: : OPIC–71.

Frequency of Use: On occasion; a function of the sampling criteria. Maximum use is once per investor per contract.

Type of Respondents: Business or other institutions (except farms).

Standard Industrial Classification Codes: All.

Description of Affected Public: U.S. companies investing overseas.

Reporting Hours: 7 hours per project.

Number of Responses: 25 per year.

Federal Cost: $1,600 per year.

Authority for Information Collection: Title 22 U.S.C. 2191(k)(2) and 2199 (h), Foreign Assistance Act of 1961, as amended.

Abstract (Needs and Uses): The Project Information Report is necessary to elicit and record the information on the developmental, environmental and U.S. economic effects of OPIC-assisted projects. The information will be used by OPIC's staff and management solely as a basis for monitoring these projects, and reporting the results in aggregate form, as required by Congress.

Dated: July 14, 1998.

James R. Offutt,

Assistant General Counsel, Department of Legal Affairs.

[FR Doc. 98–19288 Filed 7–17–98; 8:45 am]

BILLING CODE 3210–01–M

DEPARTMENT OF JUSTICE

Drug Enforcement Administration

Agency Information Collection Activities: Proposed Collection; Comment Request

ACTION: Notice of Information Collection Under Review; Extension of a currently approved collection; Report of Theft or Loss of Controlled Substances—DEA Form 106.

This proposed information collection is published to obtain comments from the public and affected agencies. Comments are encouraged and will be accepted until September 18, 1998. Request written comments and suggestions from the public and affected agencies concerning the proposed collection of information.

Your comments should address one or more of the following four points:

1. Evaluate whether the proposed collection of information is necessary for the proper performance of the functions of the agency/component, including whether the information will have practical utility;

2. Evaluate the accuracy of the agencies/components estimate of the burden of the proposed collection of information including the validity of the methodology and assumptions used;

3. Enhance the quality, utility, and clarity of the information to be collected; and

4. Minimize the burden of the collection of information on those who are to respond, including through the use of appropriate automated, electronic, mechanical, or other technological collection techniques or other forms of information technology, e.g., permitting electronic submission of responses.

If you have comments, suggestions, or need a copy of the proposed information collection instrument with instructions, if applicable, or additional information, please contact Patricia Good, 202–307–7297, Chief, Policy and Liaison Section, Office of Diversion Control, Drug Enforcement Administration, Washington, D.C. 20537.

Overview of This Information

(1) *Type of information collection:* Extension of a currently approved collection.

(2) *The title of the form/collection:* Report of Theft or Loss of Controlled Substances—DEA Form 106.

(3) *The agency form number, if any, and the applicable component of the Department sponsoring the collection: Form No.:* DEA Form 106.

Applicable component of the Department sponsoring the collection: Office of Diversion Control, Drug Enforcement Administration, U.S. Department of Justice

(4) *Affected public who will be asked or required to respond, as well as a brief abstract:*

Primary: Business or other for-profit.

Other: Individuals or households.

Abstract: Title 21, CFR, 1301.74(c) and 1301.76(b) requires DEA registrants to complete and submit DEA–106 upon discovery of a thief or loss of controlled substances. Purpose: accurate accountability; monitor substances diverted into illicit markets and develop leads for criminal investigations.

(5) *An estimate of the total number of respondents and the amount of time estimated for an average respondent to respond/reply:* 6,460 respondents. 1.3 responses per year × 30 minutes per response = .65 hrs.

(6) *An estimate of the total public burden (in hours) associated with the collection:* 4,199 annual burden hours. 6,460 respondents × .65 hrs. per respondent per year.

If additional information is required contact: Mr. Robert B. Briggs, Clearance Officer, United States Department of Justice, Information Management and Security Staff, Justice Management Division, Suite 850, Washington Center,

1001 G Street, NW, Washington, D.C. 20530.

Dated: July 13, 1998.

Robert B. Briggs,

Department Clearance Officer, United States Department of Justice.

[FR Doc. 98–19163 Filed 7–17–98; 8:45 am]

BILLING CODE 4410–01–M

DEPARTMENT OF JUSTICE

Drug Enforcement Administration

Agency Information Collection Activities: Proposed Collection; Comment Request

ACTION: Notice of Information Collection Under Review; Extension of a currently approved collection; ARCOS Transaction Reporting—DEA Form 333.

This proposed information collection is published to obtain comments from the public and affected agencies. Comments are encouraged and will be accepted until September 18, 1998. Request written comments and suggestions from the public and affected agencies concerning the proposed collection of information.

Your comments should address one or more of the following four points:

1. Evaluate whether the proposed collection of information is necessary for the proper performance of the functions of the agency/component, including whether the information will have practical utility;

2. Evaluate the accuracy of the agencies/components estimate of the burden of the proposed collection of information including the validity of the methodology and assumptions used;

3. Enhance the quality, utility, and clarity of the information to be collected; and

4. Minimize the burden of the collection of information on those who are to respond, including through the use of appropriate automated, electronic, mechanical, or other technological collection techniques or other forms of information technology, e.g., permitting electronic submission of responses.

If you have comments, suggestions, or need a copy of the proposed information collection instrument with instructions, if applicable, or additional information, please contact Patricia Good, 202–307–7297, Chief, Policy and Liaison Section, Office of Diversion Control, Drug Enforcement Administration, Washington, DC 20537.

Overview of This Information

(1) *Type of information collection:* Extension of a currently approved collection.

(2) *The title of the form/collection:* ARCOS Transaction Reporting—DEA Form 333.

(3) The agency form number, if any, and the applicable component of the Department sponsoring the collection: Form No.: DEA Form 333.

Applicable component of the Department sponsoring the collection: Office of Diversion Control, Drug Enforcement Administration, U.S. Department of Justice.

(4) *Affected public who will be asked or required to respond, as well as a brief abstract:*

Primary: Business or other for-profit.

Other: None.

Abstract: Necessary for U.S. to meet obligations under two international treaties: Single Convention on Narcotic Drugs and Psychotropic Substances. Treaties require information on the manufacture and consumption of certain substances. Information tracks substances from manufacture to sale to dispensing level.

(5) *An estimate of the total number of respondents and the amount of time estimated for an average respondent to respond/reply:* 617 respondents. 4 responses per year × 60 minutes per response = 4 hrs.

(6) *An estimate of the total public burden (in hours) associated with the collection:* 2,468 annual burden hours. 617 respondents × 4 hrs. per respondent per year.

If Additional Information is Required Contact

Mr. Robert B. Briggs, Clearance Officer, United States Department of Justice, Information Management and Security Staff, Justice Management Division, Suite 850, Washington Center, 1001 G Street, NW., Washington, DC 20530.

Dated: July 13, 1998.

Robert B. Briggs,

Department Clearance Officer, United States Department of Justice.

[FR Doc. 98–19164 Filed 7–17–98; 8:45 am]

BILLING CODE 4410–09–M

DEPARTMENT OF JUSTICE

Drug Enforcement Administration

Agency Information Collection Activities: Proposed Collection; Comment Request

ACTION: Notice of Information Collection Under Review; Extension of a currently approved collection; Application for Permit to Export Controlled Substances—DEA Form 161.

This proposed information collection is published to obtain comments from the public and affected agencies. Comments are encouraged and will be accepted until September 18, 1998. Request written comments and suggestions from the public and affected agencies concerning the proposed collection of information.

Your comments should address one or more of the following four points:

1. Evaluate whether the proposed collection of information is necessary for the proper performance of the functions of the agency/component, including whether the information will have practical utility;

2. Evaluate the accuracy of the agencies/components estimate of the burden of the proposed collection of information including the validity of the methodology and assumptions used;

3. Enhance the quality, utility, and clarity of the information to be collected; and

4. Minimize the burden of the collection of information on these who are to respond, including through the use of appropriate automated, electronic, mechanical, or other technological collection techniques or other forms of information technology, e.g., permitting electronic submission of responses.

If you have comments, suggestions, or need a copy of the proposed information collection instrument with instructions, if applicable, or additional information, please contact Patricia Good, 202–307–7297, Chief, Policy and Liaison Section, Office of Diversion Control, Drug Enforcement Administration, Washington, DC 20537.

Overview of this information:

(1) *Type of information collection:* Extension of a currently approved collection.

(2) *The title of the form/collection:* Application for Permit to Export Controlled Substances—DEA Form 161.

(3) *The agency form number, if any, and the applicable component of the Department sponsoring the collection: Form No.:* DEA Form 161.

Applicable component of the Department sponsoring the collection: Office of Diversion Control, Drug Enforcement Administration, U.S. Department of Justice.

(4) *Affected public who will be asked or required to respond, as well as a brief abstract:*

Primary: Business or other for-profit.

Other: None.

Abstract: Title 21 CFR Section 1312.22 requires individuals who export

controlled substances in Schedules I and II to obtain a permit from DEA. Information is used to issue export permits and exercise control over exportation of controlled substances and compile data for submission to UN for treaty requirements.

(5) *An estimate of the total number of respondents and the amount of time estimated for an average respondent to respond/reply:* 67 respondents. 13 responses per year × 15 minutes per response=3.25 hrs.

(6) *An estimate of the total public burden (in hours) associated with the collection:* 218 annual burden hours. 67 respondents × 3.25 hrs. per respondent per year.

If additional information is required contact: Mr. Robert B. Briggs, Clearance Officer, United States Department of Justice, Information Management and Security Staff, Justice Management Division, Suite 850, Washington Center, 1001 G. Street, NW, Washington, DC 20530.

Dated: July 13, 1998.

Robert B. Briggs,

Department Clearance Officer, United States Department of Justice.

[FR Doc. 98–19165 Filed 7–17–98; 8:45 am]

BILLING CODE 4410–09–M

DEPARTMENT OF JUSTICE

Drug Enforcement Administration

Agency Information Collection Activities: Proposed Collection; Comment Request

ACTION: Notice of Information Collection Under Review; Extension of a currently approved collection; Registrants Inventory of Drugs Surrendered—DEA Form 41.

This proposed information collection is published to obtain comments from the public and affected agencies. Comments are encouraged and will be accepted until September 18, 1998. Request written comments and suggestion from the public and affected agencies concerning the proposed collection of information.

Your comments should address one or more of the following four points:

1. Evaluate whether the proposed collection of information is necessary for the proper performance of the functions of the agency/component, including whether the information will have practical utiltiy;

2. Evaluate the accuracy of the agencies/components estimate of the burden of the proposed collection of information including the validity of the methodology and assumptions used;

3. Enhance the quality, utility, and clarity of the information to be collected; and

4. Minimize the burden of the collection of information on those who are to respond, including through the use of appropraite automated, electronic, mechanical, or other technological collection techniques or other forms of information technology, e.g., permitting electronic submission of responses.

If you have comments, suggestions, or need a copy of the proposed information collection instrument with instructions, if applicable, or additional information, please contact Patricia Good, 202–307–7297, Chief, Policy and Liaison Section, Office of Diversion Control, Drug Enforcement Administration, Washington, DC 20537.

Overview of This Information

(1) Type of information collection: Extension of a currently approved collection.

(2) The title of the form/collection: Registrants Inventory of Drugs Surrendered—DEA Form 41.

(3) The agency form number, if any, and the applicable component of the Department sponsoring the collection: Form No.: DEA Form 41.

Applicable component of the Department sponsoring the collection: Office of Diversion Control, Drug Enforcement Administration, U.S. Department of Justice.

(4) Affected public who will be asked or required to respond, as well as a brief abstract:

Primary: Business or other for-profit.

Other: None.

Abstract: Title 21, CFR, 1307.21 requires that any registrant desiring to voluntarily dispose of controlled substances shall list these controlled substances on DEA Form 41 and submit to the nearest DEA office. The DEA 41 is used to account for surrendered destroyed controlled substance, and its use is mandatory.

(5) An estimate of the total number of respondents and the amount of time estimated for an average respondent to respond/reply: 20,000 respondents. 1 responses per year × 30 minutes per response=.5 hrs (½ hr).

(6) An estimate of the total public burden (in hours) associated with the collection: 10,000 annual burden hours. 20,000 respondents × .5 hrs. per respondent per year.

If additional information is required contact: Mr. Robert B. Briggs, Clearance Officer, United States Department of Justice, Information Management and Security Staff, Justice Management Division, Suite 850, Washington Center, 1001 G Street, NW, Washington, DC 20530.

Dated: July 13, 1998.

Robert B. Briggs,

Department Clearance Officer, United States Department of Justice.

[FR Doc. 98–19166 Filed 7–17–98; 8:45 am]

BILLING CODE 4410–09–M

DEPARTMENT OF JUSTICE

Drug Enforcement Administration

Agency Information Collection Activities: Proposed Collection; Comment Request

ACTION: Notice of Information Collection Under Review; Extension of a currently approved collection; U.S. Official Order Forms for Schedules I and II Controlled Substances (Accountable Forms), Order From Requisition.

This proposed information collection is published to obtain comments from the public and affected agencies. Comments are encouraged and will be accepted until September 18, 1998. Request written comments and suggestions from the public and affected agencies concerning the proposed collection of information.

Your comments should address one or more of the following four points:

1. Evaluate whether the proposed collection of information is necessary for the proper performance of the functions of the agency/component, including whether the information will have practical utility;

2. Evaluate the accuracy of the agencies/components estimate of the burden of the proposed collection of information including the validity of the methodology and assumptions used;

3. Enhance the quality, utility, and clarity of the information to be collected; and

4. Minimize the burden of the collection of information on those who are to respond, including through the use of appropriate automated, electronic, mechanical, or other technological collection techniques or other forms of information technology, e.g., permitting electronic submission of responses.

If you have comments, suggestions, or need a copy of the proposed information collection instrument with instructions, if applicable, or additional information, please contact Patricia Good, 202–307–7297, Chief, Policy and Liaison Section, Office of Diversion Control, Drug Enforcement Administration, Washington, DC 20537.

Overview of This Information

(1) Type of information collection: Extension of a currently approved collection.

(2) The title of the form/collection: U.S. Official Order Forms for Schedules I and II Controlled Substances (ACCOUNTABLE FORMS), Order Form Requisition.

(3) The agency form number, if any, and the applicable component of the Department sponsoring the collection: Form No.: DEA Form 222 and DEA Form 222a.

Applicable component of the Department sponsoring the collection: Office of Diversion Control, Drug Enforcement Administration, U.S. Department of Justice.

(4) Affected public who will be asked or required to respond, as well as a brief abstract:

Primary: Business or other for-profit.

Other: Individuals or households, Federal Government, and State, Local or Tribal Government.

Abstract: DEA–222 is used to transfer or purchase Schedule I and II controlled substances and data is needed to provide an audit of transfer and purchase. DEA–222a Requisition Form is used to obtain the DEA–222 Order Form. Respondents are DEA registrants desiring to handle these controlled substances.

(5) An estimate of the total number of respondents and the amount of time estimated for an average respondent to respond/reply: 436,000 respondents. 1 response per year × 15 minutes per response=.25 hrs.

(6) An estimate of the total public burden (in hours) associated with the collection: 109,000 annual burden hours. 436,000 respondents × .25 hrs. respondent per year.

If additional information is required contact: Mr. Robert B. Briggs, Clearance Officer, United States Department of Justice, Information Management and Security Staff, Justice Management Division, Suite 850, Washington Center, 1001 G. Street, NW, Washington, DC 20530.

Dated: July 13, 1998.

Robert B. Briggs,

Department Clearance Officer, United States Department of Justice.

[FR Doc. 98–19167 Filed 7–17–98; 8:45 am]

BILLING CODE 4410–09–M

DEPARTMENT OF JUSTICE

Drug Enforcement Administration

Agency Information Collection Activities: Proposed Collection; Comment Request

ACTION: Notice of Information Collection Under Review; Extension of a currently approved collection; Records and Reports of Registrants: Changes in Record Requirements for Individual Practitioners.

This proposed information collection is published to obtain comments from the public and affected agencies. Comments are encouraged and will be accepted until September 18, 1998. Request written comments and suggestions from the public and affected agencies concerning the proposed collection of information.

Your comments should address one or more of the following four points:

1. Evaluate whether the proposed collection of information is necessary for the proper performance of the functions of the agency/component, including whether the information will have practical utility;

2. Evaluate the accuracy of the agencies/components estimate of the burden of the proposed collection of information including the validity of the methodology and assumptions used;

3. Enhance the quality, utility, and clarity of the information to be collected; and

4. Minimize the burden of the collection of information on those who are to respond, including through the use of appropriate automated, electronic, mechanical, or other technological collection techniques or other forms of information technology, e.g., permitting electronic submission of responses.

If you have comments, suggestions, or need a copy of the proposed information collection instrument with instructions, if applicable, or additional information, please contact Patricia Good, 202–307–7297, Chief, Policy and Liaison Section, Office of Diversion Control, Drug Enforcement Administration, Washington, D.C. 20537.

Overview of This Information

(1) Type of information collection: Extension of a currently approved collection.

(2) The title of the form/collection: Records and Reports of Registrants: Changes in Record Requirements for Individual Practitioners.

(3) The agency form number, if any, and the applicable component of the Department sponsoring the collection: Form No.: None.

Applicable component of the Department sponsoring the collection: Office of Diversion Control, Drug Enforcement Administration, U.S. Department of Justice.

(4) Affected public who will be asked or required to respond, as well as a brief abstract:

Primary: Individuals or households.

Other: Business or other for-profit.

Abstract: Required information is needed to maintain a closed system of records by requiring the individual practitioners to keep records of (1) complimentary samples of controlled substances dispensed to patients and (2) controlled substances which are both administered and dispensed to patients.

(5) An estimate of the total number of respondents and the amount of time estimated for an average respondent to respond/reply:

100,500 respondents.

100,000 recordkeepers. 1 response per year × 30 minutes per response=.5 hrs.

500 respondents. 1 response per year × 30 minutes per response=.5 hrs.

(6) An estimate of the total public burden (in hours) associated with the collection: 50,250 annual burden hours. 100,500 respondents × .5 hrs. per respondent per year.

Under the Paperwork Reduction Act, a person is not required to respond to a collection of information unless it displays a currently valid OMB control number. Public reporting burden for this collection of information is estimated to average 30 minutes per response, including the time for reviewing instructions, searching existing data sources, gathering and maintaining the data needed, and completing and reviewing the collection of information. Send comments regarding this burden estimate or any other aspect of this collection of information, including suggestions for reducing this burden, to the FOI and Records Management Section, Drug Enforcement Administration, Washington, DC 20537; and to the Office of Management and Budget, Paperwork Reduction Project No. 117–0021, Washington, DC 20503.

If additional information is required contact: Mr. Robert B. Briggs, Clearance Officer, United States Department of Justice, Information Management and Security Staff, Justice Management Division, Suite 850, Washington Center, 1001 G Street, NW, Washington, DC 20530.

Dated: July 13, 1998.

Robert B. Briggs,

Department Clearance Officer, United States Department of Justice.

[FR Doc. 98–19168 Filed 7–17–98; 8:45 am]

BILLING CODE 4410–09–M

DEPARTMENT OF JUSTICE

Drug Enforcement Administration

Agency Information Collection Activities: Proposed Collection; Comment Request

ACTION: Notice of Information Collection Under Review; Extension of a currently approved collection; Import/Export Declaration: Precursor and Essential Chemicals.

This proposed information collection is published to obtain comments from the public and affected agencies. Comments are encouraged and will be accepted until September 18, 1998. Request written comments and suggestions from the public and affected agencies concerning the proposed collection of information.

Your comments should address one or more of the following four points:

1. Evaluate whether the proposed collection of information is necessary for the proper performance of the functions of the agency/component, including whether the information will have practical utility;
2. Evaluate the accuracy of the agencies/components estimate of the burden of the proposed collection of information including the validity of the methodology and assumptions used;
3. Enhance the quality, utility, and clarity of the information to be collected; and
4. Minimize the burden of the collection of information on those who are to respond, including through the use of appropriate automated, electronic, mechanical, or other technological collection techniques or other forms of information technology, e.g., permitting electronic submission of responses.

If you have comments, suggestions, or need a copy of the proposed information collection instrument with instructions, if applicable, or additional information, please contact Patricia Good, 202–307–7297, Chief, Policy and Liaison Section, Office of Diversion Control, Drug Enforcement Administration, Washington, DC 20537.

Overview of This Information

(1) Type of information collection: Extension of a currently approved collection.

(2) The title of the form/collection: Import/Export Declaration: Precursor and Essential Chemicals.

(3) The agency form number, if any, and the applicable component of the Department sponsoring the collection: Form No.: DEA Form 486.

Applicable component of the Department sponsoring the collection: Office of Diversion Control, Drug Enforcement Administration, U.S. Department of Justice.

(4) Affected public who will be asked or required to respond, as well as a brief abstract:

Primary: Business or other for-profit.

Other: Individuals or households.

Abstract: The Chemical Diversion and Trafficking Act of 1988 requires those who import/export certain chemicals to notify the DEA 15 days prior to shipment. Information will be used to prevent shipments not intended for legitimate purposes.

(5) An estimate of the total number of respondents and the amount of time estimated for an average respondent to respond/reply: 1,800 respondents. 1 response per year × 12 minutes per response=.20 hrs.

(6) An estimate of the total public burden (in hours) associated with the collection: 360 annual burden hours. 1,800 respondents × .20 hrs. per respondent per year.

If additional information is required contact: Mr. Robert B. Briggs, Clearance Officer, United States Department of Justice, Information Management and Security Staff, Justice Management Division, Suite 850, Washington Center, 1001 G Street, NW., Washington, DC 20530.

Dated: July 13, 1998.

Robert B. Briggs,

Department Clearance Officer, United States Department of Justice.

[FR Doc. 98–19169 Filed 7–17–98; 8:45 am]

BILLING CODE 4410–09–M

DEPARTMENT OF JUSTICE

Drug Enforcement Administration

Agency Information Collection Activities: Proposed Collection; Comment Request

ACTION: Notice of Information Collection Under Review; Extension of a currently approved collection; Reports of Suspicious Orders or Theft/Loss of Listed Chemicals/Machines.

This proposed information collection is published to obtain comments from the public and affected agencies. Comments are encouraged and will be accepted until September 18, 1998. Request written comments and suggestions from the public and affected agencies concerning the proposed collection of information.

Your comments should address one or more of the following four points:

1. Evaluate whether the proposed collection of information is necessary for the proper performance of the functions of the agency/component, including whether the information will have practical utility;
2. Evaluate the accuracy of the agencies/components estimate of the burden of the proposed collection of information including the validity of the methodology and assumptions used;
3. Enhance the quality, utility, and clarity of the information to be collected; and
4. Minimize the burden of the collection of information on those who are to respond, including through the use of appropriate automated, electronic, mechanical, or other technological collection techniques or other forms of information technology, e.g., permitting electronic submissions of responses.

If you have comments, suggestions, or need a copy of the proposed information collection instrument with instructions, if applicable, or additional information, please contact Patricia Good, 202–307–7297, Chief, Policy and Liaison Section, Office of Diversion Control, Drug Enforcement Administration, Washington, DC 20537.

Overview of This Information

(1) Type of information collection: Extension of a currently approved collection.

(2) The title of the form/collection: Reports of Suspicious Orders or Theft/Loss of Listed Chemicals/Machines.

(3) The agency form number, if any, and the applicable component of the Department sponsoring the collection: Form No.: None.

Applicable component of the Department sponsoring the collection: Office of Diversion Control, Drug Enforcement Administration, U.S. Department of Justice.

(4) Affected public who will be asked or required to respond, as well as a brief abstract:

Primary: Business or other for-profit.

Other: Individuals or households.

Abstract: Domestic Chemical Diversion Control Act of 1993 amends DEA's chemical recordkeeping and reporting requirements to remove the exemption for certain drugs which contain ephedrine. Comprehensive Methamphetamine Control Act of 1996 removed the exemption for combination

ephedrine, pseudoephredrine and phenylpropanolamine drug products. Persons who previously were not required to keep records or make reports regarding sales of these products now must do so.

(5) An estimate of the total number of respondents and the amount of time estimated for an average respondent to respond/reply:

2,000 reporters. 2 responses per year × 10 minutes per response=680 hrs.
100 recordkeepers. 100 hours per recordkeeper=10,000 hrs.

(6) An estimate of the total public burden (in hours) associated with the collection: 10,680 annual burden hours.

Under the Paperwork Reduction Act, a person is not required to respond to a collection of information unless it displays a currently valid OMB control number. Public reporting burden for this collection of information is estimated to average 10 minutes per response, including the time for reviewing instructions, searching existing data sources, gathering and maintaining the data needed, and completing and reviewing the collection of information. Send comments regarding this burden estimate or any other aspect of this collection of information, including suggestions for reducing this burden, to the FOI and Records Management Section, Drug Enforcement Administration, Washington, DC 20537; and to the Office of Management and Budget, Paperwork Reduction Project No. 1117–0024, Washington, DC 20503.

If additional information is required contact: Mr. Robert B. Briggs, Clearance Officer, United States Department of Justice, Information Management and Security Staff, Justice Management Division, Suite 850, Washington Center, 1001 G. Street, NW, Washington, DC 20530.

Dated: July 13, 1998.

Robert B. Briggs,

Department Clearance Officer, United States Department of Justice.

[FR Doc. 98–19171 Filed 7–17–98; 8:45 am]

BILLING CODE 4410–09–M

DEPARTMENT OF JUSTICE

Drug Enforcement Administration

Agency Information Collection Activities: Proposed Collection: Comment Request

ACTION: Notice of Information Collection Under Review; Extension of a currently approved collection; Application for Registration Under Domestic Chemical Diversion Control Act of 1993 and Renewal Application for Registration under Domestic Chemical Control Act of 1993.

This proposed information collection is published to obtain comments from the public and affected agencies. Comments are encouraged and will be accepted until September 18, 1998. Request written comments and suggestions from the public and affected agencies concerning the proposed collection of information.

Your comments should address one or more of the following four points:

1. Evaluate whether the proposed collection of information is necessary for the proper performance of the functions of the agency/component, including whether the information will have practical utility;

2. Evaluate the accuracy of the agencies/components estimate of the burden of the proposed collection of information including the validity of the methodology and assumptions used;

3. Enhance the quality, utility, and clarity of the information to be collected; and

4. Minimize the burden of the collection of information on those who are to respond, including through the use of appropriate automated, electronic, mechanical, or other technological collection techniques or other forms of information technology, e.g., permitting electronic submission of responses.

If you have comments, suggestions, or need a copy of the proposed information collection instrument with instructions, if applicable, or additional information, please contact Patricia Good, 202–307–7297, Chief, Policy and Liaison Section, Office of Diversion Control, Drug Enforcement Administration, Washington, DC 20537.

Overview of This Information

(1) Type of information collection: Extension of a currently approved collection.

(2) The title of the form/collection: Application for Registration Under Domestic Chemical Diversion Control Act of 1993 and Renewal Application for Registration under Domestic Chemical Diversion Control Act of 1993.

(3) The agency form number, if any, and the applicable component of the Department sponsoring the collection: Form No.: DEA Form 510 and 510a.

Applicable component of the Department sponsoring the collection: Office of Diversion Control, Drug Enforcement Administration, U.S. Department of Justice.

(4) Affected public who will be asked or required to respond, as well as a brief abstract:

Primary: Business or other for-profit.

Other: Individuals or households.

Abstract: The Domestic Chemical Diversion Control Act requires that distributors, importers, and exporters of listed chemicals which are being diverted in the United States for the production of illicit drugs must register with DEA. Registration provides a system to aid in the tracking of the distribution of List I chemicals.

(5) An estimate of the total number of respondents and the amount of time estimated for an average respondent to respond/reply: 1,500 respondents. 1 response per year × 30 minutes per response = .50 hrs.

(6) An estimate of the total public burden (in hours) associated with the collection: 750 annual burden hours. 1,500 respondents × .50 hrs. per respondent per year.

If additional information is required contact: Mr. Robert B. Briggs, Clearance Officer, United States Department of Justice, Information Management and Security Staff, Justice, Management Division, Suite 850, Washington Center, 1001 G. Street, NW, Washington, DC 20530.

Dated: July 13, 1998.

Robert B. Briggs,

Department Clearance Officer, United States Department of Justice.

[FR Doc. 98–19172 Filed 7–17–98; 8:45 am]

BILLING CODE 4410–09–M

DEPARTMENT OF JUSTICE

Drug Enforcement Administration

Agency Information Collection Activities: Proposed Collection; Comment Request

ACTION: Notice of Information Collection Under Review; Extension of a currently approved collection; Removal of Restrictions on Employing Certain Individuals.

This proposed information collection is published to obtain comments from the public and affected agencies. Comments are encouraged and will be accepted until September 18, 1998. Request written comments and suggestions from the public and affected agencies concerning the proposed collection of information.

Your comments should address one or more of the following four points:

1. Evaluate whether the proposed collection of information is necessary for the proper performance of the functions of the agency/component, including whether the information will have practical utility;

2. Evaluate the accuracy of the agencies/components estimate of the burden of the proposed collection of information including the validity of the methodology and assumptions used;

3. Enhance the quality, utility, and clarity of the information to be collected; and

4. Minimize the burden of the collection of information on those who are to respond, including through the use of appropriate automated, electronic, mechanical, or other technological collection techniques or other forms of information technology, e.g., permitting electronic submission of responses.

If you have comments, suggestions, or need a copy of the proposed information collection instrument with instructions, if applicable, or additional information, please contact Patricia Good, 202–307–7297, Chief, Policy and Liaison Section, Office of Diversion Control, Drug Enforcement Administration, Washington, DC 20537.

Overview of This Information

(1) *Type of information collection:* Extension of a currently approved collection.

(2) *The title of the form/collection:* Removal of Restrictions on Employing Certain Individuals.

(3) *The agency form number, if any, and the applicable component of the Department sponsoring the collection:* Form No.: None.

Applicable component of the Department sponsoring the collection: Office of Diversion Control, Drug Enforcement Administration, U.S. Department of Justice

(4) *Affected public who will be asked or required to respond, as well as a brief abstract:*

Primary: Business or other for-profit.

Other: Individuals or households, not for Profit Institutions, Federal Government, State, Local or Tribal Government.

Abstract: The collection of information is necessary to maintain a closed system of distribution by requiring notification from DEA registrants of their intent to employ persons who have been convicted of a felony offense.

(5) *An estimate of the total number of respondents and the amount of time estimated for an average respondent to respond/reply:* 100 respondents. 1 response per year × 30 minutes per response = .50 hrs.

(6) *An estimate of the total public burden (in hours) associated with the collection:* 50 annual burden hours. 100 respondents × .50 hrs. per respondent per year.

Under the Paperwork Reduction Act, a person is not required to respond to a collection of information unless it displays a currently valid OMB control number. Public reporting burden for this collection of information is estimated to average 30 minutes per response, including the time for reviewing instructions, searching existing data sources, gathering and maintaining the data needed, and completing and reviewing the collection of information. Send comments regarding this burden estimate or any other aspect of this collection of information, including suggestions for reducing this burden, to the FOI and Records Management Section, Drug Enforcement Administration, Washington, DC 20537; and to the Office of Management and Budget, Paperwork Reduction Project No. 1117–0032, Washington, DC 20503.

If additional information is required contact: Mr. Robert B. Briggs, Clearance Officer, United States Department of Justice, Information Management and Security Staff, Justice Management Division, Suite 850, Washington Center, 1001 G. Street, NW, Washington, DC 20530.

Dated: July 13, 1998.

Robert B. Briggs,

Department Clearance Officer, United States Department of Justice.

[FR Doc. 98–19173 Filed 7–17–98; 8:45 am]

BILLING CODE 4410–09–M

DEPARTMENT OF LABOR

Pension and Welfare Benefits Administration

[Prohibited Transaction Exemption 98–36; Exemption Application No. D–10525, et al.]

Grant of Individual Exemptions; Collection Bureau Services

AGENCY: Pension and Welfare Benefits Administration, Labor.

ACTION: Grant of individual exemptions.

SUMMARY: This document contains exemptions issued by the Department of Labor (the Department) from certain of the prohibited transaction restrictions of the Employee Retirement Income Security Act of 1974 (the Act) and/or the Internal Revenue Code of 1986 (the Code).

Notices were published in the **Federal Register** of the pendency before the Department of proposals to grant such exemptions. The notices set forth a summary of facts and representations contained in each application for exemption and referred interested persons to the respective applications for a complete statement of the facts and representations. The applications have been available for public inspection at the Department in Washington, D.C. The notices also invited interested persons to submit comments on the requested exemptions to the Department. In addition the notices stated that any interested person might submit a written request that a public hearing be held (where appropriate). The applicants have represented that they have complied with the requirements of the notification to interested persons. No public comments and no requests for a hearing, unless otherwise stated, were received by the Department.

The notices of proposed exemption were issued and the exemptions are being granted solely by the Department because, effective December 31, 1978, section 102 of Reorganization Plan No. 4 of 1978 (43 FR 47713, October 17, 1978) transferred the authority of the Secretary of the Treasury to issue exemptions of the type proposed to the Secretary of Labor.

Statutory Findings

In accordance with section 408(a) of the Act and/or section 4975(c)(2) of the Code and the procedures set forth in 29 CFR Part 2570, Subpart B (55 FR 32836, 32847, August 10, 1990) and based upon the entire record, the Department makes the following findings:

(a) The exemptions are administratively feasible;

(b) They are in the interests of the plans and their participants and beneficiaries; and

(c) They are protective of the rights of the participants and beneficiaries of the plans.

Collection Bureau Services, Profit Sharing Plan and Trust (the Plan), Located in Missoula, MT

[Prohibited Transaction Exemption 98–36; Exemption Application No. D–10525]

Exemption

The restrictions of sections 406(a), 406(b)(1) and (b)(2) of the Act and the sanctions resulting from the application of section 4975 of the Code, by reason of section 4975(c)(1)(A) through (E) of the Code, shall not apply to (1) the proposed lease (the Lease) by the Plan of certain improved real property (the Property) to Collection Bureau Services (the Employer), a party in interest with respect to the Plan, and (2) the possible purchase of the Property by the Employer in the future, pursuant to the Employer's option to purchase the Property under the Lease.

This exemption is subject to the following conditions:

(1) The Plan is represented for all purposes under the Lease by a qualified, independent fiduciary;

(2) The terms and conditions of the Lease are at least as favorable to the Plan as those the Plan could obtain in a comparable arm's length transaction with an unrelated party;

(3) The rent paid to the Plan under the Lease is no less than the fair market rental value of the Property, as established by a qualified, independent appraiser;

(4) The rent is adjusted, at a minimum, every three years, based upon an updated independent appraisal of the Property, but in no event shall such adjustments result in the rent being less than the rental amount for the Property existing for the preceding period;

(5) The Lease is triple net (with all expenses for maintenance, taxes, and insurance to be borne by the Employer as the tenant);

(6) The independent fiduciary for the Plan (the I/F) reviews the terms and conditions of the Lease on behalf of the Plan and determines that the Lease is in the best interests of, and appropriate for, the Plan;

(7) The I/F monitors and enforces compliance with all of the terms and conditions of the Lease, and of this exemption, throughout the duration of the Lease;

(8) The I/F expressly approves any improvements by the Employer to the Property, any renewal of the Lease beyond the initial term, and any sale of the Property to the Employer, pursuant to the Employer's option to purchase the Property under the Lease;

(9) In the event that the Employer exercises its option to purchase the Property under the Lease, the Employer pays the Plan an amount which is the greater of either (a) the original acquisition cost of the Property, plus holding expenses, or (b) the fair market value of the Property, as of the date of the sale, as established by a qualified, independent appraiser; and

(10) At all times throughout the duration of the Lease, the fair market value of the Property represents no more than 25 percent of the total assets of the Plan.

For a more complete statement of the facts and representations supporting the Department's decision to grant this exemption, refer to the notice of proposed exemption published on May 29, 1998 at 63 FR 29456.

FOR FURTHER INFORMATION CONTACT: Ms. Karin Weng of the Department, telephone (202) 219–8881. (This is not a toll-free number.)

McClain's R.V., Inc. 401(k) Profit Sharing Plan (the Plan), Located in Lake Dallas, Texas

[Prohibited Transaction Exemption 98–37; Exemption Application No. D–10583]

Exemption

The restrictions of sections 406(a), 406(b)(1) and (b)(2) of the Act and the sanctions resulting from the application of section 4975 of the Code, by reason of section 4975(c)(1)(A) through (E) of the Code, shall not apply to the sale of certain unimproved real property (the Land) by the Plan to Larry McClain, the sole shareholder of McClain's R.V. Inc., the sponsor of the Plan, and a party in interest with respect to the Plan, provided that the following conditions are satisfied:

(a) The sale will be a one-time cash transaction;

(b) The Plan will receive the greater of: (1) The original acquisition cost of the Land plus the aggregate holding costs incurred by the Plan; or (2) the current fair market value of the Land (plus an appropriate premium related to the adjacency of the Land to other real property owned by McClain's R.V. Inc.), as established by an independent qualified appraiser at the time of the sale; and

(c) The Plan will pay no commissions or other expenses associated with the sale.

For a more complete statement of the facts and representations supporting the Department's decision to grant this exemption, refer to the notice of proposed exemption published on May 18, 1998 at 63 FR 27330.

FOR FURTHER INFORMATION CONTACT: Ekaterina A. Uzlyan of the Department at (202) 219–8883. (This is not a toll-free number.)

General Information

The attention of interested persons is directed to the following:

(1) The fact that a transaction is the subject of an exemption under section 408(a) of the Act and/or section 4975(c)(2) of the Code does not relieve a fiduciary or other party in interest or disqualified person from certain other provisions to which the exemptions does not apply and the general fiduciary responsibility provisions of section 404 of the Act, which among other things require a fiduciary to discharge his duties respecting the plan solely in the interest of the participants and beneficiaries of the plan and in a prudent fashion in accordance with section 404(a)(1)(B) of the Act; nor does it affect the requirement of section 401(a) of the Code that the plan must operate for the exclusive benefit of the employees of the employer maintaining the plan and their beneficiaries;

(2) These exemptions are supplemental to and not in derogation of, any other provisions of the Act and/or the Code, including statutory or administrative exemptions and transactional rules. Furthermore, the fact that a transaction is subject to an administrative or statutory exemption is not dispositive of whether the transaction is in fact a prohibited transaction; and

(3) The availability of these exemptions is subject to the express condition that the material facts and representations contained in each application accurately describes all material terms of the transaction which is the subject of the exemption.

Signed at Washington, D.C., this 15th day of July, 1998.

Ivan Strasfeld,

Director of Exemption Determinations, Pension and Welfare Benefits Administration, U.S. Department of Labor.

[FR Doc. 98–19233 Filed 7–17–98; 8:45 am]

BILLING CODE 4510–29–P

DEPARTMENT OF LABOR

Pension and Welfare Benefits Administration

[Application No. D–10324, et al.]

Proposed Exemptions; Pacific Income Advisers, Inc.

AGENCY: Pension and Welfare Benefits Administration, Labor.

ACTION: Notice of proposed exemptions.

SUMMARY: This document contains notices of pendency before the Department of Labor (the Department) of proposed exemptions from certain of the prohibited transaction restrictions of the Employee Retirement Income Security Act of 1974 (the Act) and/or the Internal Revenue Code of 1986 (the Code).

Written Comments and Hearing Requests

All interested persons are invited to submit written comments or request for a hearing on the pending exemptions, unless otherwise stated in the Notice of Proposed Exemption, within 45 days from the date of publication of this **Federal Register** Notice. Comments and requests for a hearing should state: (1) The name, address, and telephone number of the person making the comment or request, and (2) the nature of the person's interest in the exemption and the manner in which the person would be adversely affected by the

exemption. A request for a hearing must also state the issues to be addressed and include a general description of the evidence to be presented at the hearing.

ADDRESSES: All written comments and request for a hearing (at least three copies) should be sent to the Pension and Welfare Benefits Administration, Office of Exemption Determinations, Room N–5649, U.S. Department of Labor, 200 Constitution Avenue, N.W., Washington, D.C. 20210. Attention: Application No. _____, stated in each Notice of Proposed Exemption. The applications for exemption and the comments received will be available for public inspection in the Public Documents Room of Pension and Welfare Benefits Administration, U.S. Department of Labor, Room N–5507, 200 Constitution Avenue, N.W., Washington, D.C. 20210.

Notice to Interested Persons

Notice of the proposed exemptions will be provided to all interested persons in the manner agreed upon by the applicant and the Department within 15 days of the date of publication in the **Federal Register**. Such notice shall include a copy of the notice of proposed exemption as published in the **Federal Register** and shall inform interested persons of their right to comment and to request a hearing (where appropriate).

SUPPLEMENTARY INFORMATION: The proposed exemptions were requested in applications filed pursuant to section 408(a) of the Act and/or section 4975(c)(2) of the Code, and in accordance with procedures set forth in 29 CFR Part 2570, Subpart B (55 FR 32836, 32847, August 10, 1990). Effective December 31, 1978, section 102 of Reorganization Plan No. 4 of 1978 (43 FR 47713, October 17, 1978) transferred the authority of the Secretary of the Treasury to issue exemptions of the type requested to the Secretary of Labor. Therefore, these notices of proposed exemption are issued solely by the Department.

The applications contain representations with regard to the proposed exemptions which are summarized below. Interested persons are referred to the applications on file with the Department for a complete statement of the facts and representations.

Pacific Income Advisers, Inc. (PIA), Located in Santa Monica, CA

[Application No. D–10324]

Proposed Exemption

The Department is considering granting an exemption under the authority of section 408(a) of the Act and section 4975(c)(2) of the Code and in accordance with the procedures set forth in 29 CFR Part 2570, Subpart B (55 FR 32847, August 10, 1990).

Section I—Proposed Exemption Involving Plans Where PIA Is Both a Fiduciary or Other Party in Interest With Respect to the Plan and Investment Adviser of Certain Trusts in Which the Plans Invest

If the exemption is granted, the restrictions of sections 406(a) and 406(b) of the Act and the sanctions resulting from the application of section 4975 of the Code, by reason of section 4975(c)(1)(A) through (F) of the Code, shall not apply to: (1) The acquisition, sale or redemption of trust units (the Units) in the Pacific Income Advisers Fixed-Income Group Investment Trust (Fixed Income Trust), the Pacific Income Advisers Short-Term Group Investment Trust (Short-Term Trust), the Pacific Income Advisers Equity Group Investment Trust (Equity Trust), and the Pacific Income Advisers International Group Investment Trust (International Trust; each a Trust and collectively, the Trusts), by employee plans, and Individual Retirement Accounts (IRA's; collectively, the Plan(s)); and (2) the payment of fees by a Trust to Pacific Income Advisers (PIA) where PIA is a fiduciary or other party in interest with respect to a Plan investing in a Trust and the investment adviser to each of the Trusts, provided the conditions of Section II are satisfied.

Section II—Conditions

(1)(a) The investment of a Plan's assets in each of the Trusts and the fees to be paid by a Trust to PIA are authorized in writing by a Plan fiduciary who is independent of PIA (Independent Fiduciary).[1] Such authorization shall be consistent with the responsibilities, obligations and duties imposed on fiduciaries by Part 4 of Title I of the Act. In addition, such authorization shall be either: (1) Set forth in the investment management agreement between the Plan and PIA; (2) indicated in writing prior to each purchase or sale; or (3) indicated in writing prior to the commencement of a specified purchase or sale program in the Units of the Trusts.

(b) PIA does not provide investment advice to a Plan's Independent Fiduciary within the meaning of 29 CFR 2510.3–21(c)(1)(ii) with respect to a Plan's acquisition of Units of a Trust.

(2) Prior to making an initial investment in the Units, each Plan's Independent Fiduciary shall receive the following written disclosures from PIA:

(a) The proposed exemption and grant notice describing the exemptive relief provided herein;

(b) The applicable Trust's Offering Memorandum, outlining the investment objective(s) of the Trust and the policies employed to achieve these objectives and a description of all fees associated with investment in the Trust; and

(c) The applicable Trust's Agreement and Declaration of Trust, disclosing the structure and manner of operation of the Trust.

(d) A statement describing the relationship between PIA and the Trusts.

(3) The Independent Fiduciary shall acknowledge in writing that the Plan is an ''accredited investor'' as defined in Rule 501 of Regulation D of the Securities Act of 1933 (1933 Act). In addition, the Independent Fiduciary shall acknowledge in writing that it has not relied upon the advice of PIA with respect to the acquisition, sale or redemption of the Units.

(4) No Plan shall pay a sales commission or redemption fee, in connection with the acquisition, sale or redemption of the Units of the Trusts.

(5)(a) No participating Plan may invest more than 25% of its total assets in the International Trust.

(b) No Plan, other than a multiple employer welfare arrangement (MEWA), a multiple employer trust (MET), or voluntary employee benefit association (VEBA), may acquire or hold Units representing more than 20% of the assets of a Trust.[2] A MEWA, MET, or VEBA may acquire and hold Units representing up to 35% of the assets of either the Short-Term Trust or Fixed Income Trust only. As to investment in any other Trust, a MEWA, MET, or

[1] A fiduciary will not be deemed independent of PIA if: (1) Such fiduciary is directly or indirectly controlled by PIA or an affiliate thereof; (2) such fiduciary or any officer, director, partner, highly compensated employee, or the relative of such fiduciary is an officer, director, partner, or highly compensated employee, of PIA or an affiliate of PIA; and (3) such fiduciary directly or indirectly receives any compensation or other consideration for that fiduciary's own personal account in connection with any transaction described in this proposed exemption.

[2] A MEWA is defined in section 3(40)(A) of the Act and provides benefits described in section 3(1) of the Act for employees of two or more employers. Although the term ''MET'' is not used or defined in title I of the Act, a MET may be covered by title I of the Act, to the extent that it provides benefits described in section 3(1) of the Act and it is established or maintained by an employer, an employee organization, or both. A VEBA is defined in section 501(c)(9) of the Code and is subject to title I to the extent that it provides benefits described in section 3(1) of the Act and it is established or maintained by an employer, an employee organization, or both.

VEBA may not acquire or hold Units representing more than 20% of the assets of such Trust.

(c) For purposes of determining the percentage of the assets of a Trust being held by a single Plan, PIA shall first make the calculation 90 days after the first Unit of a Trust is sold to such Plan.

(6)(a) At the time the transactions are entered into, the terms of the transactions shall be at least as favorable to the Plans as those obtainable in arm's length transactions between unrelated parties.

(b) PIA, including any officer or director of PIA, does not purchase or sell shares of the Trusts from or to any Plan Client.

(c) The price paid or received by a Plan Client for Units of a Trust is the net asset value per Unit at the time of the transaction and it is the same price which would have been paid or received for the Units of a Trust by any other investor at that time. For purposes of this paragraph, the term net asset value means the amount for purposes of pricing all purchases and sales calculated by dividing the value of all securities, determined by an objective method as set forth in each Trust's relevant Trust documents and Trust Offering Memorandum, and other assets belonging the Trust, less the liabilities charged to such Trust, by the total number of Units of the Trust.

(7) The combined total of all fees paid by a participating Plan shall constitute no more than reasonable compensation within the meaning of section 408(b)(2)of the Act.

(8) The Plan does not pay any Plan-level investment management fees, investment advisory fees or similar fees to PIA with respect to any of the assets of such Plan which are invested in Units of a Trust. This condition does not preclude the payment of investment advisory or similar fees by the Trusts to PIA under the terms of investment management agreements between PIA and each of the Trusts.

(9) All authorizations and approvals made by the Independent Fiduciary regarding investment in a Trust and the fees paid to PIA are subject to an annual reauthorization wherein any such prior authorization shall be terminable at will by the Plan, without penalty to the Plan, upon written notice of termination. A form expressly providing an election to terminate the authorization (the Termination Form) with instructions on the use of the form must be supplied to the Independent Fiduciary no less than annually; provided that the Termination Form need not be supplied sooner pursuant to paragraph (10) below. The Termination Form must include the following information:

(a) The authorization is terminable at will by the Plan, without penalty to the Plan, upon receipt by PIA of written notice from the Independent Fiduciary; and

(b) Failure of the Independent Fiduciary to return the Termination Form will result in continued authorization of PIA to continue to engage in the transactions described in Sections I.

(10) PIA will provide, at least 30 days in advance of the implementation of an additional service to a Trust by PIA or a fee increase for investment management, investment advisory or similar services, a written notice to the Independent Fiduciary of the Plan Client explaining the nature and amount of the additional service for which a fee is charged or the increase in fees.

(11) Each Plan shall receive the following:

(a) A monthly report disclosing the performance and the value of the Plan's investment in each of the Trusts. Such monthly report shall disclose the extent to which assets of a Plan have been shifted between the Trusts by PIA and any fee differential resulting from such shifting between the Trusts;

(b) An audited financial statement of each of the Trusts in which a Plan is invested, prepared annually by a independent, certified public accountant, including a list of investments of each Trust and their valuations, provided to the Plan not later than 45 days after the end of the period to which the report relates; and

(b) An annual statement of a Plan's percentage interest in each Trust and the value of the Plan's Units, provided to the Plan not later than 45 days after the end of the period to which the report relates. Such report shall also include the total fees paid to PIA by each Trust. Further, such report shall also include the brokerage fees paid by each Trust to unrelated broker-dealers, as well as the total of all fees and expenses paid by PIA to third parties.

(12) Brokerage transactions for the Trusts are performed by entities unrelated to PIA for no more than reasonable compensation within the meaning of section 408(b)(2) of the Act.

(13) PIA shall maintain, for a period of six years, the records necessary to enable the persons described in paragraph (14) of this section to determine whether the conditions of this exemption have been satisfied, except that (a) prohibited transaction will not be considered to have occurred if, due to circumstances beyond the control of PIA, the records are lost or destroyed prior to the end of the six year period, and (b) no party in interest other than PIA shall be subject to the civil penalty that may be assessed under section 502(i) of the Act, or to the taxes imposed by section 4975(a) and (b) of the Code, if the records are not maintained, or are not available for examination as required by paragraph (13) below.

(14)(a) Except as provided in section (b) of this paragraph and notwithstanding any provisions of subsection (a)(2) and (b) of section 504 of the Act, the records referred to in paragraph (13) of this section shall be unconditionally available at their customary location during normal business hours by:

(1) Any duly authorized employee or representative of the Department or the Internal Revenue Service (the Service);

(2) Any Independent Fiduciary of a Plan investing in a Trust, or any duly authorized representative of such fiduciary;

(3) Any contributing employer to any Plan investing in a Trust, or any duly authorized employee representative of such employer;

(4) Any participant or beneficiary of any participating Plan investing in a Trust, or any duly authorized representative of such participant or beneficiary; and

(5) Any other person or entity investing in a Trust.

(b) None of the persons described above in subparagraphs (2)–(5) of this paragraph (14) shall be authorized to examine the trade secrets of PIA or commercial or financial information which is privileged.

Effective Date: If granted, this proposed exemption will be effective August 29, 1997.

Summary of Facts and Representations

1. PIA, which maintains its headquarters in Santa Monica, California, is an investment adviser registered under the Investment Advisers Act of 1940, as amended. As of January 1, 1997, PIA rendered investment advisory services with respect to $3.1 billion in client's assets.

2. It is represented that in order to offer both lower fees relative to the fees charged by PIA for separate account management, and to provide an investment vehicle that will facilitate effective diversification and management of investor assets, PIA organized each Trust as a business trust under the laws of the Commonwealth of Massachusetts. The Trusts were organized on August 29, 1997. PIA is the investment adviser for each Trust and Imperial Trust Company (Imperial)

serves as trustee and custodian of each Trust. Imperial is a wholly owned subsidiary of Imperial Bank, N.A., and is not affiliated with PIA.

3. With regard to some Plan clients (Plan Clients) who invest in the Trusts, PIA has no pre-existing fiduciary relationship. Investments in a Trust will only occur with the express written consent of an Independent Fiduciary. PIA notes that in the situation where Units of a Trust are sold to a Plan Client with which PIA does not have a pre-existing relationship prior to the Plan Client's initial purchase, a prohibited transaction could arise under section 406(a) of the Act upon a subsequent purchase or redemption of Units of a Trust. This is because a party in interest relationship would have been established by virtue of PIA serving as investment adviser and fiduciary with respect to the Plan assets invested in the Trusts.[3]

4. Also, in some instances, PIA explains that a prohibited transaction may arise under section 406(a) of the Act if the Plan acquires Units of a Trust where the Plan Client has previously entered into a separate account investment management agreement with PIA and the Plan Client subsequently wishes to change the nature of its relationship with PIA from a separate account investment to an investment in a Trust. In such a situation, the Plan will terminate its separate account relationship with PIA and invest in the Trusts. The initial investment in a Trust may give rise to a prohibited transaction because of the pre-existing relationship between PIA and the Plan Client.

5. Further, some Plan Clients may decide to continue the individual investment management relationship with PIA or permit PIA, at its discretion, to move Plan assets between one or more Trusts, subsequent to a Plan's investment in a Trust. In these instances, possible violations of sections 406(a) and 406(b) of the Act may occur with respect to PIA's sale of Units of a Trust to such Plans. Also, PIA represents that the purchase of Units of a Trust by a Plan Client may give rise to a prohibited transaction because of the receipt of fees by PIA from the Trusts as a result of the investment of Plan assets in a Trust. In situations where the Plan Clients decide to continue the individual investment management relationships with PIA following the investment in the Trusts, PIA represents that it will not receive duplicate fees (i.e., a Plan-level investment management fee and a Trust-level investment management fee) with respect to the assets of a Plan that are invested in a Trust. Specifically, PIA represents that it will forego that portion of the plan-level investment management fee to which it would be entitled to receive under the investment management agreement with the Plans where assets subject to that agreement are also invested in a Trust.

6. PIA represents that it will not act as an investment adviser, within the meaning of section 3(21)(A)(ii) of the Act, to such Plan Clients which propose to invest in one or more Trusts. PIA represents that the decision to invest in a Trust will be made by an Independent fiduciary on the basis of his or her own investigation into the advisability of investing in one or more Trusts.[4] PIA represents that under no circumstances will it have discretionary authority or control with respect to an Independent Fiduciary's initial authorization or approval to acquire Units.

7. With respect to subsequent shifting of assets between the various trusts, PIA may have the discretionary authority to effect such transactions. However, PIA will obtain authorization or approval from the Plan Client prior to shifting assets between the various Trusts. Such authorization or approval by an Independent Fiduciary shall be either: (1) Set forth in the investment management agreement between the Plan Client and the PIA; (2) indicated in writing prior to each purchase or sale; or (3) indicated in writing prior to the commencement of a specified purchase or sale program in the Trusts.

8. Each Trust will maintain and pursue a separate investment objective by investing in equity and debt securities. For example, the objective of the Equity Trust is to provide long-term growth of capital by investing primarily in equity securities. PIA represents that the Equity Trust is expected to invest a majority of its assets in U.S. securities. In addition to investing in equity securities, the Equity Trust may as well invest in high-grade debt securities. PIA further represents that the Equity Trust will not: (1) Invest more than 10% of its assets in the securities of any one issuer, excluding obligations of the U.S. Government and its instrumentalities; and (2) invest more than 25% of its assets in any one industry.

The Short-Term Trust's investment profile is similar to that of a money market fund. PIA represents that the Short-Term Trust will invest its assets only in investment grade debt securities the average maturity of which will not exceed three years, including U.S. Treasury obligations, U.S. government agency obligations, collateralized mortgage obligations (excluding swaps), corporate bonds, commercial paper and repurchase agreements. The primary investment objectives of the Short-Term Trust are, in order of preference: (1) To preserve principal; (2) maintain liquidity; and (3) to maximize the rate of return available from investments consistent with these objectives. The rate of return objective of the Short-Term Trust is to attain a total rate of return that exceeds that available for a Certificate of Deposit and other similar short-term investment strategies.

The investment objective of the Fixed Trust is to maximize its total rate of return on its investment portfolio, including realized and unrealized appreciation, and to minimize risk. In accordance with these investment objectives, the Fixed Trust will invest primarily in high quality debt securities which are rated as investment grade by at least one of the major credit rating agencies, or judged to be of comparable quality, by PIA. It is represented that the Fixed Trust's portfolio of securities will be diversified. Specifically, the Fixed Trust will not: (1) Invest more than 10% of its total assets in the securities of one issuer, excluding obligations of the U.S. government, its agencies, and instrumentalities; and (2) invest more than 25% of its assets in issuers whose principal business activities are in the same industry, excluding obligations of the U.S. Government, its agencies, and instrumentalities.

The applicant believes that the investment in Units of the Short-Term Trust and Fixed Trust by a MEWA , MET, or VEBA would be an effective way for such Plans to manage its assets to meet its regular needs for cash to pay benefit claims. In this regard, the applicant believes that it would be in the interest of a MEWA, MET, or VEBA to own as much as 35% of the Units of each of the Short-Term Trust and Fixed Trust.

[3] PIA represents that the equity participation by all Plans investing in Units of a Trust is expected to exceed 25% of the value of all Units of each of the Trusts and it has not been established that the Trusts are operating companies. Accordingly, it is anticipated that the underlying assets of the Trusts will constitute ''plan assets'' within the meaning of 29 CFR 2510.3–101.

[4] To the extent that in the ordinary course of business, PIA provides investment advice to a Plan within the meaning of regulation 29 CFR 2510.3–21(c)(1)(ii)(B) and recommends an investment of the Plan's assets in a Trust, the presence of an independent fiduciary acting on the investment adviser's recommendations on behalf of the Plan is not sufficient to insulate the adviser from fiduciary liability under section 406(b) of the Act. (See Advisory Opinions 84–03A and 84–04A, issued by the Department on January 4, 1984.) No relief is being provided herein for the provisions of investment advice in connection with the Plan's investment in the Trusts.

The objective of the International Trust is to achieve growth of capital and to earn income. The International Trust will seek to achieve these objectives by investing, under normal circumstances, in debt securities issued in emerging and developed markets located throughout the world including: (1) Debt securities issued or guaranteed by U.S. or foreign governments, their agencies, instrumentalities or political subdivisions, or by government owned, controlled or sponsored entities, including central banks (collectively, ''Sovereign Debt''), including Brady Bonds;[5] (2) interests in issuers organized and operated for the purpose of restructuring Sovereign Debt; (3) debt securities issued by foreign banks and other foreign business entities; and (4) debt securities denominated in or indexed to the currencies of emerging and developed markets. PIA represents that under normal circumstances, 75% or more of the International Trust's portfolio will be comprised of debt instruments of issuers located in global developed markets, including the United States. Further, no more than 25% of the International Trust's assets will be invested in debt securities of issuers in emerging markets. While the International Trust is not restricted in the portion of its assets that may be invested in securities of issuers located in a single region, under normal conditions the International Trust's assets will be invested in the securities of issuers located in at least three countries, and the International Trust's investments in the securities issued in any one country, other than the United States, will not exceed 25% of the International Trust's assets.

9. The Trusts will be treated as partnerships within the meaning of Part I of Subchapter K of the Code, and PIA will serve as the sole general partner of each Trust with full discretion over management and control of the business of each Trust. It is represented that PIA will not beneficially own more than 1% of the assets of any Trust. PIA will serve as investment adviser for each Trust. Under the investment advisory agreements with each Trust, PIA will provide certain investment advisory and management services that will primarily involve the exercise of investment discretion with respect to each Trust's assets. Beneficial owners of the Units (Unitholders) are anticipated to include individuals, corporations, Plans and other tax-exempt organizations. For its investment advisory services to the Equity Trust, Fixed-Income Trusts, Short-Term Trust, and International Trust, PIA will be paid an annual fee of .65%, .45%, .35% and .40% respectively, of the assets held by each Trust, payable in quarterly installments. The fee is a percentage of the value of each Trust. Such fee is accrued monthly and is paid to PIA quarterly in arrears. Each Plan bears a proportionate share of the fee based upon the value of its Units in each Trust. Brokerage and custodial services will be performed by unrelated third parties and the fees for such services will be charged in addition to PIA's fees. It is represented that the fees paid by the Plans will constitute no more than reasonable compensation.[6]

10. Units in the Trusts will be offered to Plans pursuant to a Trust Offering Memorandum (the Memorandum). This document describes the Trust, the parties involved and their rights, the investment objectives, and the fees charged for investment in each of the Trusts.[7] PIA represents that to the extent that a Plan acquires Units of one or more Trusts, that portion of a Plan's assets will be diversified because each Trust constitutes a diversified pool of securities.

11. A Plan fiduciary will determine how much to invest in a Trust and such Plan will receive a pro rata interest in the Trust based upon its capital account balance as compared to the capital account balances of other investors. All investments in the Trust will be paid in cash.

12. It is represented that prior to accepting a subscription for Units from a prospective Plan investor, PIA will furnish to an Independent Fiduciary with (a) a copy of the applicable Trust's offering Memorandum, which discusses the investment objective(s) of the Trust, the policies employed to achieve these objectives, and the compensation paid by each Trust to PIA, and fees paid by PIA and the Trust to third parties; (b) the fees charged to a Plan by each Trust; (c) a Subscription Agreement, which is designed to elicit information about the Independent Fiduciary and the Plan to determine whether the Plan qualifies as an ''accredited'' investor as set forth in Rule 501 of Regulation D of the 1933 Act; (d) a copy of the applicable Trust's Declaration of Trust; and (e) copies of the notice of proposed exemption and notice granting this exemption.

If a Plan is accepted as an investor in a Trust, the Independent Fiduciary will be required to acknowledge in connection with the execution of the Subscription Agreement that such fiduciary has received copies of the above-noted documents. In addition, the Independent Fiduciary will also be required to represent to PIA that such fiduciary is (a) independent of PIA, (b) knowledgeable with respect to the Plan in administrative matters and funding matters related thereto, and (c) capable of making, and in fact has made, an independent decision regarding the investment of Plan assets in the Trust.

PIA represents that no officer, director or employee of PIA who owns or controls, directly, or indirectly, five percent or more of the beneficial ownership or voting power of PIA will be accepted as an investor in a Trust. In addition, PIA will not be a sponsor of a Plan that invests in Units of a Trust.

13. It is represented that after a Plan is accepted as a Unitholder, PIA will provide each Unitholder with a monthly statement, reflecting the performance of the Plan's investment in the Trust, and a copy of the Trust's annual audited report.

14. Each Trust's Declaration of Trust provides that Units may not be sold or transferred to a third party without PIA's consent. Because Units will not be registered under the 1933 Act, they will be subject to the restrictions on transfers imposed thereby under applicable state securities laws. In Each Trust's Declaration of Trust, PIA has retained the right to dissolve a Trust at anytime.

15. Although each Trust's Declaration of Trust restricts each Unitholder's ability to assign its Units, Unitholders are allowed to redeem their Units. To effect a redemption of Units, a Plan must instruct PIA in writing at least seven (7) calender days prior to the last business day of the month, which is the day on which each Trust's assets are

[5] Brady Bonds are the most liquid asset class in fixed income emerging market securities. These bonds have been issued in exchange for outstanding sovereign bank loans in a number of developing countries as part of debt reduction/restructuring plans named after former Treasury Secretary Nicholas Brady. Brady Bonds have been implemented as a method of restructuring debt in emerging markets since 1989. All Brady Bonds carry principal and interest collateral guarantees in the form of U.S. Treasury securities.

[6] The Department expresses no opinion herein on whether the fees charged by PIA satisfies the terms of section 408(b)(2) of the Act.

[7] The Department wishes to note that the Act's general standards of fiduciary conduct would apply to the investments described in this proposed exemption, and that satisfaction of the conditions of this proposal should not be viewed as an endorsement of the investments by the Department. Section 404 of the Act requires, among other things, that a fiduciary discharge his duties with respect to a plan solely in the interest of the plan's participants and beneficiaries and in a prudent fashion. Accordingly, the plan fiduciary must act prudently with respect to the decision to enter into an investment transaction. The Department further emphasizes that it expects the plan fiduciary to fully understand the benefits and risks associated with engaging in a specific type of investment, including any changes in the value of the investment. Thus, in considering whether to enter into a transaction, a fiduciary should take into account its ability to provide adequate oversight over the particular investment.

valued (Valuation Date).[8] Redemption requests received by PIA in proper form at least seven (7) calendar days prior to the month's Valuation Date will result in the Units being redeemed at the net asset value per Unit determined on that month's Valuation Date, with the cash redemption proceeds transferred to or for the benefit of the redeeming Unitholder within seven (7) days thereafter. Redemption requests received by PIA fewer than seven (7) days prior to the Valuation Date will be effected at the per Unit price at the close of business on the next month's Valuation Date, with cash proceeds transferred to or for the benefit of the redeeming Plan within seven (7) days after that Valuation Date.

16. PIA anticipates that each Trust will incur the following expenses: organizational expenses, investment management and administration fees, fees for necessary professionals, the costs of regulatory compliance, and the costs associated with maintaining the Trust's legal existence. Such expenses will be paid by PIA. Each Trust will be responsible for paying brokerage commissions of unrelated brokers. No Trust will impose sales charges, redemption fees or commissions on the acquisition, sale or redemption of Units.

17. The books of the Trust will be audited annually by independent certified public accountants selected by PIA. Each Independent Fiduciary will receive a copy of the audited financial report of a Trust in which it has invested Plan assets after the close of the fiscal year of that Trust. The books and financial records of a Trust will be open for inspection by an Independent Fiduciary of, any contributing employer to, any participant or beneficiary of, or any duly authorized representative of such participant or beneficiary of, a Plan investing in Units of that Trust as well as the Department and the Internal Revenue Service, during regular business hours.

18. In summary, it is represented that the proposed transactions will meet the statutory criteria for an exemption under section 408(a) of the Act because: (a) each Independent Fiduciary will be required to represent that he or she is both independent of PIA and sufficiently knowledgeable to make an informed decision regarding the transactions described herein; (b) the Independent Fiduciary will be solely responsible for making the decision with respect to that Plan's initial acquisition of Units; (c) no Plan will pay a fee or commission by reason of the acquisition, sale or redemption of Units; (d) Unitholders will receive monthly statements and copies of the annual report for each Trust in which assets are invested; (e) at the time the transactions are entered into, the terms of the transactions shall be at least as favorable to the Plans as those obtainable in arm's length transactions between unrelated parties; (f) the fees paid by the Plans shall constitute no more than reasonable compensation; and (g) with respect to assets invested in a Trust, no Plan will pay an investment management fee at the Plan level to PIA.

For Further Information Contact: Ms. Janet L. Schmidt of the Department, telephone (202) 219–8883. (This is not a toll-free number.)

[8] Each Trust's Declaration of Trust provides that Imperial, the unrelated Trustee, shall determine the value of the assets of the Trust on the basis of the following valuation rules:

(1) Marketable U.S. Government obligations (including guaranteed obligations) shall be valued at the dealer bid prices appearing on the Valuation Date. Such prices will be taken from recognized pricing services.

(2) Securities listed on a securities exchange for which market quotations are available will be valued at the last quoted sales price on the Valuation Date or, if there has been no such reported sale, at the mean between the current bid and ask prices. Price information on listed securities will generally be taken from a composite trading tape offered by one of the pricing services. Unlisted U.S. securities for which market quotations are readily available will be valued at the official market price as quoted by the Trustee's pricing vendors.

(3) In those instances where there is no readily ascertainable market value obtainable from any of the sources specified above, investments shall be valued on the basis of data obtained from the best qualified and available independent sources, including bankers, brokers or dealers who may be employees of the unrelated Trustee, brokers or dealers who deal in or are familiar with the type of investment involved or other qualified appraisers, or by reference to the market value of similar investments for which a market value is readily ascertainable.

R & J Hoffman, Inc. Profit Sharing Plan (the Plan), Located in Fremont, California

[Application No. D–10572]

Proposed Exemption

The Department is considering granting an exemption under the authority of section 4975(c)(2) of the Code and in accordance with the procedures set forth in 29 CFR Part 2570, Subpart B (55 FR 32836, 32847, August 10, 1990). If the exemption is granted, the sanctions resulting from the application of section 4975 of the Code, by reason of section 4975(c)(1)(A) through (E) of the Code, shall not apply to: (1) The proposed loan (the Loan) of $53,240 by the Plan to R & J Hoffmann, Inc. (the Employer), a disqualified person with respect to the Plan; and (2) the personal guarantee of the Loan by Richard and Angela Hoffmann (the Hoffmanns), provided the following conditions are satisfied: (a) The terms of the Loan are at least as favorable to the Plan as those obtainable in an arm's-length transaction with an unrelated party; (b) the Loan does not exceed 25% of the assets of the Plan; (c) the Loan is secured by a second mortgage on certain real property (the Property) which has been appraised by a qualified independent appraiser to have a fair market value not less than 150% of the amount of the Loan plus the balance of the first mortgage which it secures; (d) the Hoffmanns have also personally guaranteed the Loan; (e) in the event that the fair market value of the Property is no longer adequate to secure all outstanding loans, additional property will be pledged to the Plan to secure the Loan at an amount equal to at least 150% of the outstanding principal balance of all loans secured by the Property; and (f) the Hoffmanns are the only Plan participants to be affected by the Loan.[9]

Summary of Facts and Representations

1. The Hoffmanns are the 100% owners of the Employer, a California corporation, which is the sponsor of the Plan. The Employer is involved in the purchasing of lighting fixtures from various countries in the Pacific Rim and then selling the fixtures to United States retailers. The Hoffmanns are the only participants in the Plan.

2. The Hoffmanns have requested an exemption that would permit the Employer to borrow $53,240 from the Plan. The Plan had total assets of $212,963.21 as of June 30, 1997. Therefore, the principal amount of the Loan would represent less than 25% of the value of the Plan. The term of the Loan will be for a period of five years at an interest rate equal to the Prime Rate of Interest of U.S. banks (the Prime Rate) plus 1.5%, based on the published Prime Rate in the Western Edition of the Wall Street Journal, which currently would be 8.5% per annum. The interest rate will be adjusted during the term of the Loan whenever there is a change in the Prime Rate. The new interest rate will be effective immediately after such adjustment and will remain in effect until the next time the Prime Rate changes. The Loan will be repaid in equal monthly installments of principal and interest using a level amortization schedule until there is a change in the Prime Rate, at which time a new amortization schedule will be put into

[9] Since the Hoffmanns are the sole owner of the Employer and the only participants in the Plan, there is no jurisdiction under Title I of the Act pursuant to 29 CFR 2510.3–3(b). However, there is jurisdiction under Title II of the Act pursuant to section 4975 of the Code.

place. Mr. Jeffrey Good of Wells Fargo Bank, N.A. (the Bank), has represented in a letter dated February 27, 1998, that the Bank would require a rate of Prime plus .75% in order to make a similar loan to the Employer.

3. The Loan will be secured by the Property, which consists of the Hoffmanns' residence, which is located at 1324 Grosventres Court, Fremont, California. The Property has been appraised by Karen J. Mann, SRA of Mann & Associates, an independent real estate appraiser in Fremont, California, to have a fair market value of $540,000 as of March 12, 1998. The Property has a first mortgage in the amount of $133,382. The Loan would be secured by a second mortgage on the Property. Thus, if the Loan is made, the appraised fair market value of the Property would represent approximately 289% of the total outstanding principal amount of debt secured by the Property, including the Loan. The applicant represents that the mortgage to the Plan will be duly recorded in the Office of the County Clerk, Alameda County, California. The applicant states that in the event the fair market value of the Property is no longer adequate to secure all outstanding loans, additional property will be pledged to the Plan to secure the Loan at an amount equal to at least 150% of the outstanding principal balance of all outstanding loans secured by the Property. As additional security to the Plan, the Hoffmanns have agreed to personally guarantee the Loan. The applicant has submitted a personal balance sheet for the Hoffmanns which demonstrates that they have a total net worth of $691,804.16 as of March 19, 1998.

4. In summary, the applicant represents that the proposed transaction satisfies the criteria of section 4975(c)(2) of the Code because: (a) The Loan represents not more than 25% of the assets of the Plan; (b) the terms of the Loan will be not less favorable to the Plan than those required by a third party lender, the Bank, if it were to make a similar loan; (c) the Loan will be secured by the Hoffmanns' personal guarantee and by a second mortgage on the Property, which has been determined by a qualified, independent appraiser to have a fair market value of approximately 289% of the total principal amount of the loans that it will secure; (d) in the event the fair market value of the Property is no longer adequate to secure all outstanding loans, additional property will be pledged to the Plan to secure the Loan at an amount equal to at least 150% of the outstanding principal balance of all outstanding loans secured by the Property; and (e) the Hoffmanns are the only Plan participants to be affected by the Loan, and they desire that the transaction be consummated.

Notice to Interested Persons: Since the Hoffmanns are the only Plan participants to be affected by the proposed transaction, the Department has determined that there is no need to distribute the notice of proposed exemption to interested persons. Comments and requests for a hearing are due within 30 days from the date of publication of this notice of proposed exemption in the **Federal Register**.

For Further Information Contact: Gary H. Lefkowitz of the Department, telephone (202) 219–8881. (This is not a toll-free number.)

General Information

The attention of interested persons is directed to the following:

(1) The fact that a transaction is the subject of an exemption under section 408(a) of the Act and/or section 4975(c)(2) of the Code does not relieve a fiduciary or other party in interest of disqualified person from certain other provisions of the Act and/or the Code, including any prohibited transaction provisions to which the exemption does not apply and the general fiduciary responsibility provisions of section 404 of the Act, which among other things require a fiduciary to discharge his duties respecting the plan solely in the interest of the participants and beneficiaries of the plan and in a prudent fashion in accordance with section 404(a)(1)(b) of the act; nor does it affect the requirement of section 401(a) of the Code that the plan must operate for the exclusive benefit of the employees of the employer maintaining the plan and their beneficiaries;

(2) Before an exemption may be granted under section 408(a) of the Act and/or section 4975(c)(2) of the Code, the Department must find that the exemption is administratively feasible, in the interests of the plan and of its participants and beneficiaries and protective of the rights of participants and beneficiaries of the plan;

(3) The proposed exemptions, if granted, will be supplemental to, and not in derogation of, any other provisions of the Act and/or the Code, including statutory or administrative exemptions and transitional rules. Furthermore, the fact that a transaction is subject to an administrative or statutory exemption is not dispositive of whether the transaction is in fact a prohibited transaction; and

(4) The proposed exemptions, if granted, will be subject to the express condition that the material facts and representations contained in each application are true and complete, and that each application accurately describes all material terms of the transaction which is the subject of the exemption.

Signed at Washington, DC, this 15th day of July, 1998.

Ivan Strasfeld,

Director of Exemption Determinations, Pension and Welfare Benefits Administration, U.S. Department of Labor.

[FR Doc. 98–19234 Filed 7–17–98; 8:45 am]

BILLING CODE 4510–29–P

NATIONAL CREDIT UNION ADMINISTRATION

Agency Information Collection Activities: Submission to OMB for Review; Comment Request

AGENCY: National Credit Union Administration (NCUA).

ACTION: Request for comment.

SUMMARY: The NCUA plans to submit the following extension of a currently approved information collection to the Office of Management and Budget (OMB) for review and clearance under the Paperwork Reduction Act of 1995 (Pub. L. 104–13, 44 U.S.C. Chapter 35). This information collection is published to obtain comments from the public.

DATES: Comments will be accepted until September 18, 1998.

ADDRESSES: Interested parties are invited to submit written comments to NCUA Clearance Officer or OMB Reviewer listed below:

Clearance Officer: Mr. James L. Baylen (703) 518–6411, National Credit Union Administration, 1775 Duke Street, Alexandria, Virginia 22314–3428, Fax No. 703–518–6433, E-mail: jbaylen@ncua.gov.

OMB Reviewer: Alexander T. Hunt (202) 395–7860, Office of Management and Budget, Room 10226, New Executive Office Building, Washington, DC 20503.

FOR FURTHER INFORMATION CONTACT: Copies of the information collection requests, with applicable supporting documentation, may be obtained by calling the NCUA Clearance Officer, James L. Baylen, (703) 518–6411.

SUPPLEMENTARY INFORMATION: Proposal for the following collection of information:

OMB Number: 3133–0011.

Form Number: NCUA 9600.

Type of Review: Extension of a currently approved collection.

Title: Application for Insurance of Accounts State-Chartered Credit Unions.

Description: Section 201 of the Federal Credit Union Act (12 U.S.C. 1781) requires state-chartered credit unions desiring federal insurance to submit an application. The requirement also applies to federal credit unions converting to state charters and desiring federal insurance.

Respondents: State chartered credit unions and federal credit unions converting to state charter that desire federal insurance of member accounts.

Estimated No. of Respondents/ Recordkeepers: 61.

Estimated Burden Hours Per Response: 4.5 hours.

Frequency of Response: As required.

Estimated Total Annual Burden Hours: 268.

Estimated Total Annual Cost: N/A.

By the National Credit Union Administration Board on July 13, 1998.

Becky Baker,

Secretary of the Board.

[FR Doc. 98–19244 Filed 7–17–98; 8:45 am]

BILLING CODE 7535–01–P

NUCLEAR REGULATORY COMMISSION

Agency Information Collection Activities: Submission for OMB Review; Comment Request

AGENCY: U.S. Nuclear Regulatory Commission (NRC).

ACTION: Notice of the OMB review of information collection and solicitation of public comment.

SUMMARY: The NRC has recently submitted to OMB for review the following proposal for the collection of information under the provisions of the Paperwork Reduction Act of 1995 (44 U.S.C. Chapter 35). The NRC hereby informs potential respondents that an agency may not conduct or sponsor, and that a person is not required to respond to, a collection of information unless it displays a currently valid OMB control number.

1. *Type of submission, new, revision, or extension:* Revision.

2. *The title of the information collection:*

NRC Form 327—Special Nuclear Material (SNM) and Source Material (SM) Physical Inventory Summary Report;

NUREG/BR–0096—Instructions and Guidance for Completing Physical Inventory Summary Reports.

3. *The form number, if applicable:* NRC Form 327.

4. *How often the collection is required:* The frequency of reporting corresponds to the frequency of required inventories, which depends essentially on the strategic significance of the SNM covered by the particular license. Certain licensees possessing strategic SNM are required to report inventories every 2 months. Licensees possessing SNM of moderate strategic significance must report every 6 months. Licensees possessing SNM of low strategic significance must report annually.

5. *Who will be required or asked to report:* Fuel facility licensees possessing special nuclear material.

6. *An estimate of the number of responses:* 23.

7. *The estimated number of annual respondents:* 10.

8. *An estimate of the total number of hours needed annually to complete the requirement or request:* 98 (an average of approximately 4.25 hours per response for 23 responses).

9. *An indication of whether Section 3507(d), Pub. L. 104–13 applies:* Not applicable.

10. *Abstract:* NRC Form 327 is submitted by fuel facility licensees to account for special nuclear material. The data is used by NRC to assess licensee material control and accounting programs and to confirm the absence of (or detect the occurrence of) special nuclear material theft or diversion. NUREG/BR–0096 provides specific guidance and instructions for completing the form in accordance with the requirements appropriate for a particular licensee.

A copy of the final supporting statement may be viewed free of charge at the NRC Public Document Room, 2120 L Street, NW (lower level), Washington, DC. OMB clearance requests are available at the NRC worldwide web site (http://www.nrc.gov) under the FedWorld collection link on the home page tool bar. The document will be available on the NRC home page site for 60 days after the signature date of this notice.

Comments and questions should be directed to the OMB reviewer by August 19, 1998: Erik Godwin, Office of Information and Regulatory Affairs (3150–0139), NEOB–10202, Office of Management and Budget, Washington, DC 20503.

Comments can also be submitted by telephone at (202) 395–3084.

The NRC Clearance Officer is Brenda Jo. Shelton, 301–415–7233.

Dated at Rockville, Maryland, this 10th day of July, 1998.

For the Nuclear Regulatory Commission.

Brenda Jo. Shelton,

NRC Clearance Officer, Office of the Chief Information Officer.

[FR Doc. 98–19225 Filed 7–17–98; 8:45 am]

BILLING CODE 7590–01–P

NUCLEAR REGULATORY COMMISSION

Agency Information Collection Activities: Submission for OMB Review; Comment Request

AGENCY: U.S. Nuclear Regulatory Commission (NRC).

ACTION: Notice of the OMB review of information collection and solicitation of public comment.

SUMMARY: The NRC has recently submitted to OMB for review the following proposal for the collection of information under the provisions of the Paperwork Reduction Act of 1995 (44 U.S.C. Chapter 35). The NRC hereby informs potential respondents that an agency may not conduct or sponsor, and that a person is not required to respond to, a collection of information unless it displays a currently valid OMB control number.

1. Type of submission, new, revision, or extension: revision.

2. The title of the information collection:

NRC Form 4, ''Cumulative Occupational Exposure History''

NRC Form 5, ''Occupational Exposure Record for a Monitoring Period.''

3. The form number if applicable: NRC Forms 4 and 5

4. How often the collection is required: NRC Form 4 is generated for each individual who is likely to receive, in one year, an occupational dose requiring monitoring as described § 20.1502. It is maintained by the licensee until the Commission terminates the license. It is not submitted to the NRC. NRC Form 5 is prepared by all NRC licensees and is submitted only by those licensees listed in 10 CFR 20.2206(a) to the NRC annually.

5. Who will be required or asked to report: NRC licensees listed in 10 CFR 20.2206(a).

6. An estimate of the number of responses:

NRC Form 4
22,373

NRC Form 5
records maintained 497,635
reports submitted 173,536

7. The estimated number of annual respondents:

NRC Form 4

300 (109 reactor sites and 191 materials licensees)

NRC Form 5

5,986 licensees maintain records

300 (109 reactor sites and 191 materials licensees) are required to submit reports in accordance with 10 CFR 20.2206(a)

8. An estimate of the total number of hours needed annually to complete the requirement or request:

NRC Form 4

11,187 hours or an average of 0.5 hours per response.

NRC Form 5

175,957 hours—163,957 recordkeeping hours (an average of 0.33 hours per record × 83 individuals × 5,986 licensees) and 12,000 reporting hours in accordance with 10 CFR 20.2206(a) (an average of 40 hours per licensee × 300 licensees).

9. An indication of whether Section 3507(d), Pub. L. 104–13 applies: Not applicable.

10. Abstract: NRC Form 4 is used to record the summary of an individual's cumulative occupational radiation dose for the current year to ensure that dose does not exceed regulatory limits. NRC Form 5 is used to record and report the results of individual monitoring for occupational dose from radiation during a one-year period to ensure regulatory compliance with annual dose limits.

A copy of the final supporting statement may be viewed free of charge at the NRC Public Document Room, 2120 L Street, NW (lower level), Washington, DC. OMB clearance requests are available at the NRC worldwide web site (http://www.nrc.gov) under the FedWorld collection link on the home page tool bar. The document will be available on the NRC home page site for 60 days after the signature date of this notice.

Comments and questions should be directed to the OMB reviewer by August 19, 1998: Erik Godwin, Office of Information and Regulatory Affairs (3150–0005, 3150–0006), NEOB–10202, Office of Management and Budget, Washington, DC 20503.

Comments can also be submitted by telephone at (202) 395–3084.

The NRC Clearance Officer is Brenda Jo. Shelton, 301–415–7233.

Dated at Rockville, Maryland, this 10th day of July, 1998.

For the Nuclear Regulatory Commission.

Brenda Jo. Shelton,

NRC Clearance Officer, Office of the Chief Information Officer.

[FR Doc. 98–19226 Filed 7–17–98; 8:45 am]

BILLING CODE 7590–01–P

NUCLEAR REGULATORY COMMISSION

[Docket No. 50–335]

Florida Power and Light (St. Lucie Unit 1); Confirmatory Order Modifying License Effective Immediately

I

Florida Power and Light, (FPL or the Licensee) is the holder of Facility Operating License No. 50–335, which authorizes operation of St. Lucie Plant, Unit 1, located in St. Lucie County, Florida.

II

The staff of the U.S. Nuclear Regulatory Commission (NRC) has been concerned that Thermo-Lag 330–1 fire barrier systems installed by Licensees may not provide the level of fire endurance intended and that Licensees that use Thermo-Lag 330–1 fire barriers may not be meeting regulatory requirements. During the 1992 to 1994 timeframe, the NRC staff issued Generic Letter (GL) 92–08, ''Thermo-Lag 330–1 Fire Barriers,'' and subsequent requests for additional information that requested Licensees to submit plans and schedules for resolving the Thermo-Lag issue. The NRC staff has obtained and reviewed all Licensees' corrective plans and schedules. The staff is concerned that some Licensees may not be making adequate progress toward resolving the plant-specific issues, and that some implementation schedules may be either too tenuous or too protracted. For example, several Licensees informed the NRC staff that their completion dates had slipped by 6 months to as much as 3 years. For plants that have completion action scheduled beyond 1997, the NRC staff has met with these Licensees to discuss the progress of the Licensees' corrective actions and the extent of Licensee management attention regarding completion of Thermo-Lag corrective actions. In addition, the NRC staff discussed with Licensees the possibility of accelerating their completion schedules.

FPL was one of the Licensees with which the NRC staff held meetings. At these meetings, the NRC staff reviewed with FPL the schedule of Thermo-Lag corrective actions described in FPL submittals to the NRC dated October 27, 1995, and August 27, 1996. Based on the information submitted by FPL as supplemented by letter dated June 3, 1998, the NRC staff has concluded that the schedules presented are reasonable. This conclusion is based on (1) the amount of installed Thermo-Lag, (2) the complexity of the plant-specific fire barrier configurations and issues, (3) the need to perform certain plant modifications during outages as opposed to those that can be performed while the plant is at power, and (4) integration with other significant, but unrelated issues that FPL is addressing at its plant. In order to remove compensatory measures such as fire watches, it has been determined that resolution of the Thermo-Lag corrective actions by FPL must be completed in accordance with current FPL schedules. By letter dated May 1, 1998, the NRC staff notified FPL of its plan to incorporate FPL's schedule commitment into a requirement by issuance of an order and requested consent from the Licensee. By letter dated June 3, 1998, the Licensee provided its consent to issuance of a Confirmatory Order.

III

The Licensee's commitment as set forth in its letter of June 3, 1998 is acceptable and is necessary for the NRC to conclude that public health and safety are reasonably assured. To preclude any schedule slippage and to assure public health and safety, the NRC staff has determined that the Licensee's commitments in its June 3, 1998, letter be confirmed by this Order. The Licensee has agreed to this action. Based on the above, and the Licensee's consent, this Order is immediately effective upon issuance.

IV

Accordingly, pursuant to sections 103, 161b, 161i, 161o, 182, and 186 of the Atomic Energy Act of 1954, as amended, and the Commission's regulations in 10 CFR 2.202 and 10 CFR Part 50, *it is hereby ordered*, effective immediately, that:

FPL shall complete final implementation of Thermo-Lag 330–1 fire barrier corrective actions at St. Lucie Unit 1, as described in FPL letters L–97–19 dated March 17, 1997, and L–98–134 dated June 3, 1998, by December 31, 1998. There are three exceptions to this commitment as discussed in FPL letter L–98–134.

1. The proposed corrective action for the Thermo-Lag wall separating the St. Lucie Unit 1 cable spreading room and ''B'' switchgear room will not be completed by December 31, 1998. As discussed in L–98–134, FPL will complete the implementation of this proposed corrective action by the completion of the St. Lucie Unit 1 1999 refueling outage (SL1–16).

2. Thermo-Lag ampacity derating methodology issues, which are still under NRC review, will likely not be resolved by December 31, 1998. Schedules for any corrective actions related to ampacity derating will be determined separately and are not part of this Order.

3. The resolution of any new Thermo-Lag corrective actions resulting from the pilot fire protection functional inspection (FPFI) conducted at St. Lucie during March 1998 are not considered part of this confirming order since FPL has neither received nor responded to the inspection report. Such issues and any corrective actions will be scheduled and resolved as part of that inspection.

The Director, Office of Nuclear Reactor Regulation, may relax or rescind, in writing, any provisions of this Confirmatory Order upon a showing by the Licensee of good cause.

V

Any person adversely affected by this Confirmatory Order, other than the Licensee, may request a hearing within 20 days of its issuance. Where good cause is shown, consideration will be given to extending the time to request a hearing. A request for extension of time must be made in writing to the Director, Office of Nuclear Reactor Regulation, U.S. Nuclear Regulatory Commission, Washington, DC 20555, and include a statement of good cause for the extension. Any request for a hearing will be submitted to the Secretary, U.S. Nuclear Regulatory Commission, Attention: Rulemakings and Adjudications Staff, Washington, DC 20555. Copies of the hearing request shall also be sent to the Director, Office of Nuclear Reactor Regulation, U.S. Nuclear Regulatory Commission, Washington, DC 20555, to the Deputy Assistant General Council for Enforcement at the same address, to the Regional Administrator, NRC Region II, Atlanta Federal Center, M/S 23T85, 61 Forsyth Street, SW., Atlanta, GA 30303–3415, and to the Licensee. If such a person requests a hearing, that person shall set forth with particularity the manner in which his or her interest is adversely affected by this Order and shall address criteria set forth in 10 CFR 2.714(d).

If a hearing is requested by a person whose interest is adversely affected, the Commission will issue an Order designating the time and place of any such hearing. If a hearing is held, the issue to be considered at such hearing shall be whether this Confirmatory Order should be sustained.

In the absence of any request for hearing, or written approval of an extension of time in which to request a hearing, the provisions specified in Section IV above shall be final 20 days from the date of this Order without further order or proceedings. If an extension of time for requesting a hearing has been approved, the provisions specified in Section IV shall be final when the extension expires if a hearing request has not been received. An answer or a request for hearing shall not stay the immediate effectiveness of this Order.

Dated at Rockville, Maryland, this 13th day of July, 1998.

For the Nuclear Regulatory Commission.

Frank J. Miraglia,

Acting Director, Office of Nuclear Reactor Regulation.

[FR Doc. 98–19223 Filed 7–17–98; 8:45 am]

BILLING CODE 7590–01–P

NUCLEAR REGULATORY COMMISSION

Indiana Michigan Power Company; Notice of Informal 10 CFR 2.206 Public Hearing

The U.S. Nuclear Regulatory Commission (NRC) will hold an informal public hearing regarding a petition submitted pursuant to 10 CFR 2.206 involving Donald C. Cook, Units 1 and 2 of the Indiana Michigan Power Company (the licensee). The hearing will be held on August 19, 1998. The location of the hearing will be at the NRC, rooms T–09A1–T–09F5. The NRC is located at 11555 Rockville Pike, Rockville, Maryland. The hearing will be open to public attendance and will be transcribed.

The structure of the hearing shall be as follows:

Wednesday, August 19, 1998:

9:00 a.m.—NRC opening remarks
9:15 a.m.—Petitioner's presentation
10:00 a.m.—NRC questions
10:15 a.m.—Licensee's presentation
11:00 a.m.—NRC questions
11:15 a.m.—Public Comments
11:45 a.m.—Licensee/Petitioner's final statements
12:00 noon—Meeting concludes

By letter dated October 9, 1997, the Union of Concerned Scientists (UCS or Petitioner) submitted a Petition pursuant to 10 CFR 2.206 requesting that the operating licenses for Donald C. Cook Nuclear Power Plant, Units 1 and 2, be modified, revoked, or suspended until there is reasonable assurance that plant systems are in conformance with design-and licensing-bases requirements. In addition, the Petitioner requested that a public hearing into the matter be held in the Washington, D.C., area before the first unit at D.C. Cook is authorized to restart. By letter dated January 12, 1998, UCS submitted an Addendum to the original Petition presenting additional information on six other concerns at the D.C. Cook plant.

The purpose of this informal public hearing is to obtain additional information from the Petitioner, the licensee, and the public for NRC staff use in evaluating the Petition. Therefore, this informal public hearing will be limited to information relevant to issues raised in the Petition and its Addendum. The staff will not offer any preliminary views on its evaluation of the Petition. The informal public hearing will be chaired by a senior NRC official who will limit presentations to the above subject.

The format of the informal public hearing will be as follows: opening remarks by the NRC regarding the general 10 CFR 2.206 process, the purpose of the informal public hearing, and a brief summary of the Petition and its Addendum (15 minutes); time for the Petitioner to articulate the basis of the Petition (45 minutes); time for the NRC to ask the Petitioner questions for purposes of clarification (15 minutes); time for the licensee to address the issues raised in the Petition (45 minutes); time for the NRC to ask the licensee questions for purposes of clarification (15 minutes); time for public comments relative to the Petition (30 minutes); and time for licensee and Petitioner's final statements (15 minutes).

Members of the public who are interested in presenting information relative to the Petition should notify the NRC official named below, 5 working days prior to the hearing. A brief summary of the information to be presented and the time requested should be provided in order to make appropriate arrangements. Time allotted for presentations by members of the public will be determined based upon the number of requests received and will be announced at the beginning of the hearing. The order for public presentations will be on a first received first to speak basis. Written statements will also be accepted and included in the record of the hearing. Written statements should be mailed to the U.S. Nuclear Regulatory Commission, Mailstop O–13E21, Attn: John Stang, Washington, DC 20555.

Requests for the opportunity to present information can be made by contacting John Stang, Project Manager, Division of Reactor Projects-III/IV (telephone 301–415–1345) between 7:30 a.m. to 4:15 p.m. (EDT), Monday–Friday. Persons planning to attend this informal public hearing are urged to contact the above 1 or 2 days prior to the informal public hearing to be advised of any changes that may have occurred.

Dated at Rockville, Maryland, this 14th day of July, 1998.

For the Nuclear Regulatory Commission.

Elinor G. Adensam,

Acting Director, Division of Reactor Projects—III/IV, Office of Nuclear Reactor Regulation.

[FR Doc. 98–19221 Filed 7–17–98; 8:45 am]

BILLING CODE 7590–01–P

NUCLEAR REGULATORY COMMISSION

[Docket No. 50–259, 50–260 and 50–296]

Tennessee Valley Authority; Notice of Issuance of Amendment to Facility Operating License

The U.S. Nuclear Regulatory Commission (NRC, the Commission) has issued Amendment Nos. 234, 253 and 212 to Facility Operating License Nos. DPR–33, DPR–52 and DPR–68 issued to the Tennessee Valley Authority (TVA or the licensee) for operation of the Browns Ferry Nuclear Plant (BFN), Units 1, 2 and 3, respectively, located in Limestone County, Alabama.

The amendments implement a full conversion from the current Technical Specifications (TS) to a set of TS based on NUREG–1433, Revision 1, ''Standard Technical Specifications for General Electric Plants, BWR/4,'' dated April 1995. The application for the amendments complies with the standards and requirements of the Atomic Energy Act of 1954, as amended (the Act) and the Commission's rules and regulations. The Commission has made appropriate findings as required by the Act and the Commission's rules and regulations in 10 CFR Chapter I, which are set forth in the license amendments.

Notices of consideration of Issuance of Amendments to facility Operating License and Opportunity for Hearing in connection with this action were published in the **Federal Register** on October 23, 1996 (61 FR 55026), June 1, 1998 (63 FR 29763) and June 12, 1998 (63 FR 32252). No request for a hearing or petition for leave to intervene was filed following these notices.

The Commission has prepared an Environmental assessment to the action and has determined not to prepare an environmental impact statement. Based upon the environmental assessment, the Commission has concluded that the issuance of the amendments will not have a significant impact on the quality of the human environment (63 FR 34944).

For further details with respect to this action, see the application for amendments dated September 6, 1996, as supplemented May 1, August 14, November 5 and 14, December 3, 4, 11, 22, 23, 29 and 30, 1997, January 23, March 12, April 16, 20 and 28, and May 7, 14, 19 and 27, and June 2, 5, 10 and 19, 1998,, which are available for public inspection at the Commission's Public Document Room, the Gelman Building, 2120 L Street NW., Washington, DC and at the local public document room located at the Athens Public Library, 405 E. South Street, Athens, Alabama.

Dated at Rockville, Maryland, this 14th day of July, 1998.

For the Nuclear Regulatory Commission.

Frederick J. Hebdon,

Project Director, Project Directorate II–3, Division of Reactor Projects—I/II, Office of Nuclear Reactor Regulation.

[FR Doc. 98–19224 Filed 7–17–98; 8:45 am]

BILLING CODE 7590–01–P

NUCLEAR REGULATORY COMMISSION

A Nonparametric Statistical Methodology for the Design and Analysis of Final Status Decommissioning Surveys: Interim Draft for Comment and Use

AGENCY: Nuclear Regulatory Commission.

ACTION: Notice of availability.

SUMMARY: The Nuclear Regulatory Commission (NRC) is announcing the availability for use of NUREG–1505, ''A Nonparametric Statistical Methodology for the Design and Analysis of Final Status Decommissioning Surveys, Interim Draft for Comment and Use.'' NUREG–1505 provides the statistical basis for Multi-Agency Radiation Survey and Site Investigation Manual's (MARSSIM) information on planning, conducting, and evaluating environmental radiological surveys of surface soils and building surfaces for demonstrating compliance with regulations. NUREG–1505 now incorporates public and NRC staff comments received since its initial publication in August 1995 and MARSSIM's publication in December 1996. The NRC reviewed public comments received on the draft NUREG as well as comments received as a result of a concurrent, independent, technical peer review. Suggested changes were incorporated, where appropriate, in response to those comments.

DATES: The comment period ends December 31, 1998. Comments received after this date will be considered if practical to do so, but the NRC is able to ensure consideration only for those comments received on or before this date.

ADDRESSES: Submit written comments to: Chief, Rules and Directives Branch, Division of Administrative Services, Office of Administration, U.S. Nuclear Regulatory Commission, Washington, DC 20555–0001.

Hand deliver comments to 11545 Rockville Pike, Rockville Maryland, between 7:15 a.m. and 4:30 p.m. on Federal workdays.

Comments may also be submitted through the Internet by addressing electronic mail to DLM1@NRC.GOV.

Those considering public comment may request a free single copy of NUREG–1505, while supplies last, by contacting the Office of the chief Information Officer, Reproduction and Distribution Section, U.S. Nuclear Regulatory Commission, Washington, DC 20555–0001; or send a facsimile to 301–415–2289 or e-mail to GRW1@nrc.gov. A copy is also available for inspection and/or copying for a fee in the NRC Public Document Room, 2120 L Street, NW, Washington DC 20555–0001. All others may purchase this report by writing to: The Superintendent of Documents, U.S. Government Printing Office, P.O. Box 37082, Washington, DC 20402–9328.

The manual is also available through the Internet by linkage from the NRC home page at: http://www.nrc.gov.

FOR FURTHER INFORMATION CONTACT: Questions concerning technical information in the NUREG should be addressed to George E. Powers, Phone: (301) 415–6212, U.S. Nuclear Regulatory Commission, MS T–9C24, Washington DC 20555, e-mail gep@nrc.gov.

SUPPLEMENTARY INFORMATION: The NUREG provides additional information not contained in MARSSIM on planning, conducting and evaluating environmental radiological surveys of soil surfaces and building surfaces for demonstrating compliance with regulations. The MARSSIM, now finalized, is a multi-agency consensus document.

NUREG–1505 provides the technical basis for MARSSIM's objective to describe standardized and consistent approaches for surveys of soil surfaces and building surfaces, which provide a high degree of assurance that established release criteria, limits, guidelines, and conditions of the regulatory agencies are satisfied, while at the same time encouraging an effective use of resources. The techniques, methodologies, and philosophies that form the bases of this manual were developed to be consistent with current Federal limits, guidelines, and procedures.

The agency is soliciting comments arising from review and use of the NUREG in conjunction with MARSSIM.

Comments will be reviewed and resolved as appropriate in the next revision of the NUREG.

Dated at Rockville, Maryland, this 19th day of June, 1998.

For the Nuclear Regulatory Commission.

John W. Craig,

Director, Division of Regulatory Applications, Office of Nuclear Regulatory Research.

[FR Doc. 98–19227 Filed 7–17–98; 8:45 am]

BILLING CODE 7590–01–M

Nuclear Regulatory Commission

Assessment of the Use of Potassium Iodide (KI) as a Public Protective Action During Severe Reactor Accidents; Availability of NUREG

AGENCY: Nuclear Regulatory Commission.

ACTION: Request for comments and notice of availability.

SUMMARY: The NRC is announcing the availability of draft NUREG–1633, ''Assessment of the Use of Potassium Iodide (KI) As a Public Protective Action During Severe Reactor Accidents,'' and is requesting comments by September 15, 1998. Copies may be obtained by writing to the Superintendent of Documents, U.S. Government Printing Office, PO Box 37082, Washington, DC 20402–9328. You may obtain a copy free of charge to the extent of supply by writing to: Reproduction and Distribution Section, Office of the Chief Information Officer, U.S. Nuclear Regulatory Commission, Mail Stop OP–137, Washington, DC 20555–0001.

FOR FURTHER INFORMATION CONTACT: Aby S. Mohseni, Division of Incident Response, Office for Analysis and Evaluation of Operational Data, U.S. Nuclear Regulatory Commission, Washington, DC 20555–0001, Telephone: 301–415–6409, e-mail asm@nrc.gov.

SUPPLEMENTARY INFORMATION: On June 26, 1998, the Commission directed the staff to issue the draft NUREG–1633 for public comment. The staff will publish NUREG–1633 in its final form after evaluating comments received and making the appropriate changes. Subsequently, the staff will develop an information brochure based on NUREG–1633 to assist State and local planners in reaching an informed decision as to whether KI is an appropriate protective supplement.

Electronic Availability

Draft NUREG–1633 is also available electronically in the Reference Library area of the NRC's Home Page under technical reports. (http://www.nrc.gov).

For the Nuclear Regulatory Commission.

Frank J Congel,

Director, Division of Incident Response, Office for Analysis and Evaluation of Operational Data.

[FR Doc. 98–19222 Filed 7–17–98; 8:45 am]

BILLING CODE 7590–01–U

SECURITIES AND EXCHANGE COMMISSION

Submission for OMB Review; Comment Request

Upon Written Request, Copies Available From: Securities and Exchange Commission, Office of Filings and Information Services, Washington, DC 20549.

Extension:

Rule 15a–4, SEC File No. 270–7, OMB Control No. 3235–0010

Rule 17a–1, SEC File No. 270–244, OMB Control No. 3235–0208

Notice is hereby given that pursuant to the Paperwork Reduction Act of 1995 (44 U.S.C. 3501 *et seq.*) the Securities and Exchange Commission (''Commission'') has submitted for extension of OMB approval the following rules:

Rule 15a–4 (17 CFR 240.15a–4) under the Securities Exchange Act of 1934 (15 U.S.C. 78a *et seq.*) permits a natural person who is a member of a securities exchange and who terminates its association with a registered broker-dealer to continue to do business on the exchange while the Commission reviews his application for registration as a broker-dealer, if the exchange files a statement indicating that there does not appear to be any ground for disapproving the application. The total annual burden imposed by Rule 15a–4 is 240 hours, based on approximately 30 submissions, each requiring 8 hours to complete.

Completing and filing Form BD is mandatory in order for a broker-dealer to obtain the 45-day extension under Rule 15a–4 and does not involve the collection of confidential information.

Rule 17a–1 (17 CFR 240.17a–1) under the Securities Exchange Act of 1934 (15 U.S.C. 78a *et seq.*) requires that all national securities exchanges, national securities associations, registered clearing agencies, and the Municipal Securities Rulemaking Board keep on file for a period of five years, two years in an accessible place, all documents which it makes or receives respecting its self-regulatory activities, and that such documents be available for examination by the Commission. The average number of hours necessary for compliance with the requirements of Rule 17a–1 is 50 hours per year. There are 26 entities required to comply with the rule: 8 national securities exchanges, 1 national securities association, 16 registered clearing agencies, and the Municipal Securities Rulemaking Board. The total number of hours required for all respondents to comply with the rule is thus 1,300 hours annually.

Completing the requirements under Rule 17a–1, are mandatory, and does not involve the collection of confidential information.

Please note that an agency may not conduct or sponsor, and a person is not required to respond to, a collection of information unless it displays a currently valid control number.

General comments regarding the estimated burden hours should be directed to the following persons: (i) Desk Officer for the Securities and Exchange Commission, Office of Information and Regulatory Affairs, Office of Management and Budget, Room 3208, New Executive Office Building, Washington, DC 20503; and (ii) Michael E. Bartell, Associate Executive Director, Office of Information Technology, Securities and Exchange Commission, 450 Fifth Street, NW., Washington, DC 20549. Comments must be submitted to OMB within 30 days of this notice.

Dated: July 13, 1998.

Margaret H. McFarland,

Deputy Secretary.

[FR Doc. 98–19183 Filed 7–17–98; 8:45 am]

BILLING CODE 8010–01–M

SECURITIES AND EXCHANGE COMMISSION

Sunshine Act Meeting

Notice is hereby given, pursuant to the provisions of the Government in the Sunshine Act, Pub. L. 94–409, that the Securities and Exchange Commission will hold the following meeting during the week of July 20, 1998.

A closed meeting will be held on Thursday, July 23, 1998, at 10:00 a.m.

Commissioners Counsel to the Commissioners, the Secretary to the Commission, and recording secretaries will attend the closed meeting. Certain staff members who have an interest in the matters may also be present.

The General Counsel of the Commission, or his designee, has certified that, in his opinion, one or more of the exemptions set forth in 5 U.S.C. 552b(c)(4), (8), (9)(A) and (10) and 17 CFR 200.402(a)(4), (8), (9)(i) and

(10), permit consideration of the scheduled matters at the closed meeting.

Commissioner Johnson, as duty officer, voted to consider the items listed for the closed meeting in a closed session.

The subject matter of the closed meeting scheduled for Thursday, July 23, 1998, at 10:00 a.m., will be:

Instituion and settlement of injunctive actions.

Instititon and settlement of administrative proceedings of an enforcement nature.

At times, changes in Commission priorities require alterations in the scheduling of meeting items. For further information and to ascertain what, if any, matters have been added, deleted or postponed, please contact:

The Office of the Secretary at (202) 942–7070.

Dated: July 16, 1998.

Jonathan G. Katz,

Secretary.

[FR Doc. 98–19434 Filed 7–16–98; 3:44 pm]

BILLING CODE 8010–01–M

SECURITIES AND EXCHANGE COMMISSION

[Release No. 34–40196; File No. SR–CHX–98–01]

Self-Regulatory Organizations; Order Approving Proposed Rule Change and Amendment No. 1 by The Chicago Stock Exchange, Incorporated Relating to the Stopping of Market and Marketable Limit Orders

July 13, 1998.

I. Background

On January 16, 1998, the Chicago Stock Exchange, Incorporated (''CHX'' or ''Exchange'') filed with the Securities and Exchange Commission (''Commission'') a proposed rule change relating to the stopping of market and marketable limit orders pursuant to Section 19(b)(1) of the Securities Exchange Act of 1934 (''Act'').[1] On February 12, 1998, the Exchange filed amendment No. 1 with the Commission.[2] The proposed rule change, as amended, was published for comment in Securities Exchange Act Release No. 39956 (May 5, 1998), 63 FR 26233 (May 12, 1998). No comments were received on the proposal. For the reasons discussed below, the Commission is approving the proposed rule change.[3]

II. Description of the Proposal

The Exchange proposes to amend Article XX, Rule 37(b) relating to the stopping of market orders and marketable limit orders in the Midwest Automated Execution System (''MAX System''). The purpose of the proposed rule change is to amend CHX rules relating to ''stopped'' orders[4] in the MAX System[5] (i) to permit specialists to stop a marketable limit order[6] if the order is not immediately executed, and (ii) to automate the stopping of certain market orders that are not automatically executed.

Under the Exchange's BEST Rule, Exchange specialists are required to guarantee executions of all agency[7] market and limit orders for Dual Trading System issues[8] from 100 shares up to and including 2099 shares. Subject to the requirements of the short sale rule, market orders in Dual Trading System issues must be executed at a price equal to or better than the Intermarket Trading System (''ITS'') best bid or offer (''BBO''), up to the size associated with the ITS BBO. Limit orders must be executed at their limit price or better when: (1) the ITS BBO at the limit price has been exhausted in the primary market; (2) there has been a price penetration of the limit in the primary market (generally known as a trade-through of a CHX limit order); or (3) the issue is trading at the limit price on the primary market unless it can be demonstrated that the order would not have been executed if it had been transmitted to the primary market or the broker and specialist agree to a specific volume related to, or other criteria for, requiring an execution.[9]

The Exchange's MAX System provides for the automatic execution of orders that are eligible for execution under the Exchange's BEST Rule and certain other orders.[10] The MAX System has two size parameters which must be designated by the specialist on a stock-by-stock basis. For Dual Trading System issues, the specialist must set the auto-execution threshold at 1099 shares or greater and the auto-acceptance threshold at 2099 shares or greater. In no event may the auto-acceptance threshold be less than the auto-execution threshold. If the order-entry firm sends an order through the MAX System that is greater than the specialist's auto-acceptance threshold, a specialist may cancel the order within one minute of it being entered into the MAX System. If the order is not canceled by the specialist, the order is designated as an open order.[11] If the order-entry firm sends an order through the MAX System that is less than the auto-acceptance threshold but greater than the auto-execution threshold, the order is not available for automatic execution but is designated in the open order book. A specialist may manually execute any portion of the order; the

---

[1] 15 U.S.C. 78s(b)(1).

[2] *See* letter from David T. Rusoff, Foley & Lardner, to Gail A. Marshall, Division of Market Regulation, Commission, dated February 12, 1998.

[3] This approval includes a technical amendment that the Commission received which deleted an inappropriate reference in the proposed rule text. Article XX, Rule 37(b)(10) should not have referenced automatic executions under Article XX, Rule 37(b)(7). *See* letter David T. Rusoff, Foley & Lardner, to Gail A. Marshall, Division of Market Regulation, Commission, dated July 13, 1998.

[4] *See* CHX Manual, Art. XX, Rule 28 regarding member liability for stopped orders.

[5] The MAX System provides an automated delivery and, in certain cases, execution facility for orders that are eligible for execution under Article XX, Rule 37(a), and in certain other orders. *See* CHX Manual, Art. XX, Rule 37(b).

[6] For purposes of this filing, a marketable limit order is a limit order that is marketable when entered into the MAX System, *i.e.*, the limit price of the order is at or past (higher for a buy order or lower for a sell order) the relevant side of the ITS BBO at the time the order is received in the MAX System. If the ITS BBO subsequently moves away from the limit price (*i.e.*, if the limit price is lower than the ITS best offer for a buy order or higher than the ITS best bid for a sell order) after receipt of the order but before execution of the order, the order will still be considered a marketable limit order for purposes of pending auto-stop. Conversely, if a limit order is not marketable when received by the MAX System, the order will not be considered a marketable limit order for purposes of pending auto-stop, even if the ITS BBO subsequently becomes equal to or past the limit price of the order.

[7] The term ''agency order'' means an order for the account of a customer, but does not include professional orders as defined in CHX, Art. XXX, Rule 2, interpretation and policy .04. That rule defines a ''professional order'' as any order for the account of a broker-dealer, or any account in which a broker-dealer or an associated person of a broker-dealer has any direct or indirect interest.

[8] Dual Trading System Issues are issues that are traded on the CHX, either through listing on the CHX or pursuant to unlisted trading privileges, and are also listed on either the New York Stock Exchange or the American Stock Exchange.

[9] It is the responsibility of the specialist to be able to demonstrate that the order would not have been executed had it been routed to the other market. This is often accomplished by sending a ''marker'' order to the primary market.

[10] A MAX order fits under the BEST parameters must be executed pursuant to BEST Rules via the MAX System. (*See* Art. XX, Rule 37(a) for BEST Rules). While the BEST Rules do not apply if the order is outside the BEST parameters, MAX System handling rules are still applicable. (*See* Art. XX, Rule 37(b) for MAX System handling rules)

[11] If an oversized market or limit order is received by the specialist, he will either reject the order immediately or display it immediately, in accordance with CHX Article XX, Rule 7 and the SEC's recently adopted Order Execution Rules (Securities Exchange Act Release No. 37619A (Sept. 6, 1996), 61 FR 48290 (Sept. 12, 1996)). If the order is displayed, the specialist will check with the order entry broker to determine the validity of the oversized order. During the one minute period, the specialist can cancel the order and return it to the order entry firm, but until it is canceled the displayed order is eligible for execution.

difference must remain as an open order. If the order-entry firm sends an order through the MAX System that is less than or equal to the auto-execution threshold, the order is executed automatically, unless an exception applies.[12]

The MAX Rules currently provide several exceptions to automatic execution, even for orders that are less than or equal to the auto-exeuction threshold. First, unless a professional order is received with a ''Z'' designator, it is not automatically executed, regardless of size. Second, all market orders for Dual Trading System issues received through the MAX System that would result in an out of range [13] execution are deemed to be received with a request to ''stop.''[14] Stopped orders for Dual Trading System issues are not automatically executed in the usual course (*i.e.,* pursuant to Rule 37(b)(6)), but are placed in the open order file.[15] The order sending firm then receives a ''UR Stopped'' message. The specialist is then required to include the order in its quote by bidding (if it is an order to buy) or offering (if it is an order to sell) the shares at one minimum variation better than the current market, in an effort to obtain price improvement for the order. Third, the MAX System will not automatically execute a market order or marketable limit order if the size associated with the ITS BBO, for Dual Trading System issues, is less than the size of the market or marketable limit order.[16]

Currently, the MAX System has no functionality to automatically ''stop'' marketable limit orders; only market orders are stopped, and then only for Dual Trading System issues if the order would result in out of range execution or the size of the order is greater than the size associated with the ITS BBO.[17] Consequently, if a marketable limit order is not immediately executed (*e.g.,* it is out of range, the order is greater than the size associated with the ITS BBO, etc.), it is merely added to the open order book. No message is sent to the order sending firm until the order is executed. The same is true for market orders that are not automatically stopped and are not automatically executed.

Because no message is sent to the order sending firm, the firm is uncertain as to the current status of its order. As a result, as stated above, the puprose of the proposed rule change is (i) to permit specialist to stop a marketable limit order, and (ii) to automate the stopping of certain market orders. Once stopped, the order sending firm will then receive a stopped message, rather than being unsure as to the current status of the order, as is currently the case.

Specifically, the CHX is proposing to amend Article XX, Rule 37 (b)(10) to provide that all MAX market orders that are from 100 up to and including 599 shares (or such higher amount determined by a specialist on a stock by stock basis) that are not automatically executed in the normal course pursuant to Rule 37(b)(6) (*i.e.,* because there is insufficient size associated with the ITS BBO, because the order would result in an out of range execution, because the order is a professional order and the specialist has not yet decided whether to accept the order, or because of any other reason permitted under CHX rules) will be identified as a ''pending auto stop'' order.[18]

These orders will retain their ''pending auto-stop'' status for 30 seconds. At the end of this 30 second period, the MAX System will automatically stop the order and send a ''UR Stopped'' message to the order sending firm, *unless,* before the end of the 30 second period, the order is executed, canceled, manually stopped by the specialist or ''put on hold.'' If any of these events occur, the ''pending auto-stop'' status will be removed from the order and the order will not automatically be stopped.[19] If an order is ''put on hold, the CHX's existing rules for the order will apply. If the order is stopped, the stop price will be the ITS BBO at the time the order is received in the MAX System. Furthermore, if the order is stopped after the ''pending auto-stop'' period, the *entire* order will be stopped.

The change to Rule 37(b)(10) to stop the entire order will result in better guarantees for the order than are required by existing CHX Rules. For example, professional orders are currently not guaranteed an execution under the BEST Rule. Under this change, eligible professional market orders will not be guaranteed an execution at the stopped price. Additionally, pursuant to Article XX, Rule 28, a stopped order constitutes a guarantee that the order will be executed at the stopped price or better. However, under existing rules, if the size of the order is greater than the size of the ITS BBO in existence when the order is received, there is merely no automatic execution of the order, the order does not have to be ''stopped.'' Moreover, even if the order is ''stopped'' under Rule 28 only that portion of the order that is less than or equal to the size of the ITS BBO is stopped. The portion of the order that exceeds the ITS BBO is not stopped. As proposed, the entire size of the order (up to 599 shares) would be automatically stopped after the seeond delay unless an exception applies.

The Exchange believes that the 30 second delay between the time the order is entered and the time the order is stopped is appropriate. The 30 seconds will give the specialist an opportunity to review the order to determine whether a stop is appropriate under the circumstances.

The ''pending auto-stop'' feature of the MAX System will operate from 8:45 a.m. until 2:57 p.m. Thus, only orders entered into the MAX System after 8:45 a.m. but before 2:57 p.m. will be eligible to be ''pending auto-stop'' orders.

In addition to adding the new ''pending auto stop'' order to the MAX System the CHX is proposing changes to the MAX System that would permit a specialist to manually ''stop'' a marketable limit order, regardless of size.

III. Discussion

The Commission believes that the proposed rule change is consistent with the Act and the rules and regulations thereunder applicable to the Exchange, and, in particular with Section 6(b)(5),[20] which requires that the rules of an exchange be designed, among other things, to promote just and equitable principles of trade, to remove impediments to and perfect the mechanism of a free and open market and a national market system, and, in

[12] *See* CHX Article XX Rule 37(b)(6) and (7).

[13] ''Out of range'' means either higher or lower than the range in which the security has traded on the primary market during a particular trading day.

[14] *See* CHX Manual, Art. XX, Rule 37(b)(11).

[15] *See* CHX Manual, Art. XX, Rule 37(b)(2).

[16] *See* CHX Manual, Art. XX, rule 37(b)(12).

[17] *See* CHX Manual, Art. XX, Rule 37(b)(10) and (11). While makret orders may also be stopped under the Exchange's Enhanced SuperMAX program, these orders are not subject to this filing.

[18] While both agency and professional orders will be eligible to be ''pending auto-stop'' orders, all or none orders, odd-lot orders, fill or kill orders, immediate or cancel orders, orders that are or will be stopped under the Enhanced SuperMAX program, and other orders that cannot be entered into the MAX System (*i.e.,* not held orders, sell short exempt orders and special settlement orders) will not be eligible to be ''pending auto stop'' orders.

[19] As is the case for all features of the MAX System, in unusual trading conditions, this feature of MAX can be de-activated (in its entirety or on an issue by issue basis) with the approval of two members of the Exchange's Committee on Floor Procedure or designated member of the Exchange staff who would have authority to set execution prices. *See* CHX Article XX, Rule 37(b)(8).

[20] 15 U.S.C. 78f(b)(5).

general, to protect investors and the public interest.

The Commission believes that the proposal to add the functionality to the MAX System to automatically stop unexecuted market orders and marketable limit orders will provide investors additional benefits. First, specialists will now have the ability to automatically stop marketable limit order which provides investors with improved opportunities for price improvement on these orders. Second, investors trading in Dual Trading System issues will be provided with more certainty as to the status of their orders because the auto-stop feature results in a message being sent to the order sending firm notifying that firm that the order has been stopped.[21] Third, investors may receive improved executions on their orders because, once auto-stopped, the entire order (up to 599 shares) in Dual Trading System issues will now be guaranteed an execution at the stopped price, regardless of whether it is an eligible professional market order or an order greater than the size of the ITS BBO.

The Commission believes that the proposed 30 second ''pending auto-stop'' period prior to the order being automatically stopped was designed to provide specialists with an opportunity to determine the best course for the order, consistent with best execution principles, whether that be executing the order, manually stopping the order, canceling the order, or putting the order on hold.[22] The Commission, however, expects the Exchange, as it gains experience with the auto-stop feature, to review whether the ''pending auto-stop'' period should be less than 30 seconds. In addition, the Commission anticipates that the Exchange will surveil to determine that specialists are not eluding the auto-stop feature, and thereby the benefits to investors, by routinely putting orders on hold or canceling them.

IV. Conclusion

For the foregoing reasons, the Commission finds that the proposed rule change is consistent with the Act and the rules and regulations thereunder applicable to a national securities exchange. In addition, in approving this rule, the Commission notes that it has also considered the proposed rule's impact on efficiency, competition, and capital formation.[23]

It is therefore ordered, pursuant to Section 19(b)(2) of the Act,[24] that the proposed rule change (CHX–98–01) be, and hereby is, approved.

For the Commission, by the Division of Market Regulation, pursuant to delegated authority.[25]

Margaret H. McFarland,

Deputy Secretary.

[FR Doc. 98–19182 Filed 7–17–98; 8:45 am]

BILLING CODE 8010–01–M

[21] The stopped price will be the price at the time the order was received in the MAX System, consistent with CHX Rules for stopped orders.

[22] If an order is ''put on hold,'' the existing CHX Rules on order handling apply.

[23] 15 U.S.C. 78c(f).

[24] 15 U.S.C. 78s(b)(2).

[25] 15 CFR 200.30–3(a)(12).

SECURITIES AND EXCHANGE COMMISSION

[Release No. 34–40195; File No. SR–MSRB–98–7]

Self-Regulatory Organizations; Notice of Filing and Immediate Effectiveness of Proposed Rule Change by the Municipal Securities Rulemaking Board Relating to Fee for Backlog Document Collection of its Official Statement/Advance Refunding Document Subsystem of the Municipal Securities Information Library

July 13, 1998.

Pursuant to Section 19(b)(1) of the Securities Exchange Act of 1934 (''Act''),[1] and Rule 19b–4 thereunder,[2] notice is hereby given that on June 16, 1998, the Municipal Securities Rulemaking Board (''Board'' or ''MSRB'') filed with the Securities and Exchange Commission (''Commission'') a proposed rule change is described in Items I, II, III below, which Items have been prepared by the Board. The Commission is publishing this notice to solicit comments on the proposed rule change from interested persons.

I. Self-Regulatory Organization's Statement of the Terms of Substance of the Proposed Rule Change

The Board is filing herewith a proposed rule change to change certain fees relating to the operation of its Official Statement/Advance Refunding Document (''OS/ARD'') subsystem of the Municipal Securities Information Library® (''MSIL®'') system.[3] The Board is establishing a price of $8,000 (plus delivery or postage charges) of each of its annual ''backlog'' collections of official statements and refunding documents.

II. Self-Regulatory Organization's Statement of the Purpose of and Statutory Basis for the Proposed Rule Change

In its filing with the Commission, the Board included statements concerning the purpose of, and basis for, the purposed rule change and discussed any comments it received on the proposed rule change. The texts of these statements may be examined at the places specified in Item IV below. The U.S. has prepared summaries, set forth in Section A, B and C below, of the most significant aspects of such statements.

A. Self-Regulatory Organization's Statement of the Purpose of, and Statutory Basis for, the Purposed Rule Change

1. Purpose

The OS/ARD subsystem is a central electronic facility through which information collected and stored pursuant to MSRB Rule G–36 is made available electronically and in paper form to market participants and information vendors.[4] The annual subscription fee for daily electronic images of current year documents from the OS/ARD system currently is $14,000.[5] The fees for backlog document collections are substantially less than fees for an annual subscription because an annual subscription requires the Board to send electronic media to the subscriber each business day, but a backlog collection requires fewer resources.[6]

As of January 1, 1998, the Board terminated its contract with its imaging contractor and began operating the Board's own imaging subsystem. Part of this change was to begin storing OS/ARD images on CD–ROM instead of

[1] 15 U.S.C. 78s(b)(1) (1994).

[2] 17 CFR 240.19b–4 (1997).

[3] Municipal Securities Information Library and MSIL are registered trademarks of the Board. The MSIL® system, which was approved in Securities Exchange Act Release No. 29298 (June 13, 1991), 56 FR 28194 (June 19, 1991, is a central facility through which information about municipal securities is collected, stored and disseminated.

[4] Rule G–36 requires underwriters to provide copies of final official statements and advance refunding documents within certain specified time frames for most new issues issued since January 1, 1990.

[5] Securities Exchange Act Release No. 37361 (June 25, 1996), 61 FR 34463 (July 2, 1996).

[6] The backlog fee plus delivery costs for 1996 if $7,000; 1995 is $9,000; 1994 is $7,000; 1993 is $9,000; 1992 is $7,000; 1991 is $8,000; 1990 is $6,000. *See* Securities Exchange Act Release No. 38694 (May 29, 1997), 62 FR 30919 (June 5, 1997) (1996 fee); Securities Exchange Act Release No. 37361 (June 25, 1996), 61 FR 34463 (July 2, 1996) (1995 fee); Securities Exchange Act Release No. 35848 (June 14, 1995), 60 FR 32187 (June 20, 1995) (1994 Fee); Securities Exchange Act Release No. 34602 (Aug. 25, 1994), 59 FR 45319 (Sept. 1, 1994) (1993 and 1991 fees); and Securities Exchange Act Release No.32482 (June 16, 1993), 58 FR 34115 (June 23, 1993) (1992 and 1990 fees). The fees for the backlog collections vary based on the number of documents received and processed in any given year.

magneto-optical disk or digital audio tape (DAT). This change in media has made the cost of selling annual backlog collections more even. Thus, the Board is establishing a price of $8,000 (plus delivery or postage charges) for each annual backlog collection.[7]

In its prior filings with the Commission, the Board stated that it intends to use its general revenues to help fund collecting, indexing and storing the OS/ARD subsystem's documents. However, the Board stated its intention that the costs of producing paper and electronic copies would be completely covered by user fees.[8] The Board is changing the fees for the annual backlog collectiuons to defray its cost of disseminating the electronic collections in a manner that reflects the change in cost to the Board resulting from the use of new media and in-house imaging. This is consistent with the Commission's policy that self-regulatory organizations' fees be based on expenses incurred in providing information to the public. The Board believes that employing cost-based prices is in the public interest since it will ensure that a complete collection of vital information will be available, at fair and responsible prices, for the life of the municipal securities.

2. Statutory Basis

The Board believes the proposed rule change is consistent with Section 15B(b)(2)(C) of the Act,[9] which requires, in pertinent part, that the Board's rules: Be designed to prevent fraudulent and manipulative acts and practices, to promote just and equitable principles of trade, to foster cooperation and coordination with persons engaged in regulating, clearing, settling, processing information with respect to, and facilitating transactions in municipal securities, to remove impediments to and perfect the mechanism of free and open market in municipal securities, and, in general, to protect investors and the public interest.

The MSIL® system is designed to increase the integrity and efficiency of the municipal securities market by, among other things, helping to ensure that the price charged for an issue in the secondary market reflects all available official information about that issue. The Board believes the new annual backlog fee is fair and reasonable in light of the costs associated with disseminating the information and the services provided by the MSIL® system are available on reasonable and nondiscriminatory terms to any interested person.

B. Self-Regulatory Organization's Statement on Burden on Competition

The Board does not believe that the proposed rule change will impose any burden on competition not necessary or appropriate in furtherance of the purposes of the Act.

C. Self-Regulatory Organization's Statement on Comments on the Proposed Rule Change Received From Members, Participants, or Others

Written comments were neither solicited nor received.

III. Date of Effectiveness of the Proposed Rule Change and Timing for Commission Action

The rule change became effective on June 16, 1998, pursuant to Section 19(b)(3)(A)(ii) of the Act,[10] because the proposal establishes a fee. At any time within sixty days of the filing of the proposed rule change, the Commission may summarily abrogate such rule change if its appears to the Commission that such action is necessary or appropriate in the public interest, for the protection of investors, or otherwise in furtherance of the purposes of the Act.

IV. Solicitation of Comments

Interested persons are invited to submit written data, views, and arguments concerning the foregoing, including whether the proposed rule change is consistent with the Act.[11] Persons making written submissions should file six copies thereof with the Secretary, Securities and Exchange Commission, 450 Fifth Street, N.W., Washington, D.C. 20549. Copies of the submission, all subsequent amendments, all written statements with respect to the proposed rule change that are filed with the Commission, and all written communications relating to the proposed rule change between the Commission and any person, other than those that may be withheld from the public in accordance with the provisions of 5 U.S.C. § 552, will be available for inspection and copying in the Commission's Public Reference Room. Copies of the filing will also be available for inspection and copying at the Board's principal offices. All submissions should refer to File No. SR–MSRB–98–7 and should be submitted by August 10, 1998.

For the Commission, by the Division of Market Regulation, pursuant to delegated authority.[12]

Margaret H. McFarland,

Deputy Secretary.

[FR Doc. 98–19181 Filed 7–17–98; 8:45 am]

BILLING CODE 8010–01–M

[7] This price would apply to all prior backlog collections as well as the annual backlog collection for 1997 and future annual backlog collections. Telephone conversation with Ernesto A. Lanza, Assistant General Counsel, Board, and Karl Varner, Attorney, SEC, on July 2, 1998.

[8] Securities Exchange Act Release No. 28197 (July 12, 1990), 55 FR 29436 (July 19, 1990).

[9] 15 U.S.C. 78*o*(b)(2)(C).

[10] 15 U.S.C. 78s(b)(3)(A)(ii).

[11] In reviewing this proposal, the Commission has considered the proposed rule change's impact on efficiency, competition, and capital formation. 15 U.S.C. 78c(f).

[12] 17 CFR 200.30–3(a)(12).

SMALL BUSINESS ADMINISTRATION

Public Meeting

AGENCY: Small Business Administration.

ACTION: Notice of a Public Meeting on multi-Lender securitizations of the unguaranteed portion of SBA loans made under Section 7(a) of the Small Business Act.

SUMMARY: SBA is modifying its Interim Final Rule regarding financing and securitizing the unguaranteed portions of loans made under Section 7(a) of the Small Business Act. In its proposed rule, published May 18, 1998, SBA specifically sought comments during the 60-day comment period to assist in developing a proposal for multi-Lender securitizations. (See 63 FR 27219) Before developing such a proposal, SBA will hold a public meeting to gather a broad spectrum of ideas. Neither this meeting nor any written suggestions received after July 17, 1998, will be part of the record for the proposed rule published on May 18th.

DATES: July 30, 1998, 2 p.m. to 5 p.m.

ADDRESSES: Eisenhower Conference Room, U.S. Small Business Administration, 409 3rd Street, S.W., Washington, D.C. 20416.

FOR FURTHER INFORMATION CONTACT: James W. Hammersley, Director, Secondary Market Sales, (202) 205–7505.

SUPPLEMENTARY INFORMATION: SBA posed several questions relating to multi-Lender securitizations in its May 18th Notice of Proposed Rulemaking. (See 63 FR 27219) In addition to those questions, SBA would like attendees to consider the following issues:

(1) What are the possible ways for a lender to retain an economic interest when securitizing through a multi-Lender structure?

(2) How can SBA connect the performance of securitizing lenders to the required retained economic interest in a multi-Lender structure?

(3) How should SBA manage the participation in the Preferred Lender

Program for those lenders securitizing through a multi-Lender structure?

(4) How can SBA establish regulations that provide a structure for conduit transactions yet allow for other structure for multi-Lender securitizations?

(5) Should entities that sponsor multi-Lender securitization structures be regulated by SBA? If so, how?

To encourage the free exchange of ideas, the public meeting will be in the form of a round-table discussion.

Anyone wishing to submit written suggestions should send them to Jane Palsgrove Butler, Acting Associate Administrator for Financial Assistance, U.S. Small Business Administration, 409 3rd Street, S.W., Suite 8200, Washington, D.C. 20416.

The public meeting will take place at the Small Business Administration Office at 409 3rd Street, S.W., Washington, D.C. 20417. The meeting will be held on July 30, 1998, from 2 p.m. to 5 p.m.

Dated: July 14, 1998.

Jane Palsgrove Butler,

Acting Associate Administrator for Financial Assistance.

[FR Doc. 98–19147 Filed 7–17–98; 8:45 am]

BILLING CODE 8025–01–U

SMALL BUSINESS ADMINISTRATION

Region IX—Honolulu District Advisory Council; Public Hearing

The Small Business Administration Region IX Honolulu District Advisory Council located in the geographical area of Honolulu, Hawaii, will hold a public meeting at 9:30 a.m. on Thursday, July 30, 1998 at the Business Information and Counseling Center, 111 Bishop Street, Suite 204, Training Center, Honolulu, HI 96813, to discuss such matters as may be presented by members, staff of the Small Business Administration, or others present.

For further information, write or call: Andrew K. Poepoe, District Director, U.S. Small Business Administration, 300 Ala Moana Boulevard, Room 2–235, Honolulu, Hawaii 96850–4981, (808) 541–2965.

Dated: July 15, 1998.

Shirl Thomas,

Director, Office of External Affairs.

[FR Doc. 98–19235 Filed 7–17–98; 8:45 am]

BILLING CODE 8025–01–P

SMALL BUSINESS ADMINISTRATION

Wisconsin State Advisory Council; Public Hearing

The U.S. Small Business Administration Wisconsin State Advisory Council, located in the geographical area of Milwaukee, Wisconsin, will hold a public meeting from 12:00 p.m. to 1:00 p.m., July 16, 1998 at Metro Milwaukee Area Chamber (MMAC) Association of Commerce Building; 756 North Milwaukee Street, Fourth Floor, Milwaukee, Wisconsin to discuss such matters as may be presented by members, staff of the U.S. Small Business Administration, or others present.

For further information, write or call Yolanda Lassiter, U.S. Small Business Administration, 310 West Wisconsin Avenue Milwaukee, Wisconsin 53203; (414) 297–1092.

Dated: July 15, 1998.

Shirl Thomas,

Director, Office of External Affairs.

[FR Doc. 98–19237 Filed 7–17–98; 8:45 am]

BILLING CODE 8025–01–P

DEPARTMENT OF TRANSPORTATION

Office of the Secretary

Notification Requirements Concerning Substantial Changes in Ownership and Operations

AGENCY: Office of the Secretary, DOT.

ACTION: Notice.

SUMMARY: The Department of Transportation reminds all air carriers holding authority for which a fitness finding is required to comply with the notification requirements of 14 CFR 204.5 concerning a change in ownership or a filing of a petition or a plan of reorganization under Chapter 11 of the U.S. Bankruptcy Code, and to accompany such written notification with information in support of the carrier's continuing fitness. The Department also requests that those carriers provide the Department with a minimum 30-day advance notification of any proposed substantial change in ownership, whether or not the change is part of a restructuring or recapitalization of a debtor-air carrier under a Chapter 11 plan of reorganization.

FOR FURTHER INFORMATION CONTACT: Carol A. Woods, Air Carrier Fitness Division, X–56, Department of Transportation, 400 Seventh Street, SW., Washington, DC 20590, (202) 366–9721.

Patrick V. Murphy,

Deputy Assistant Secretary for Aviation and International Affairs.

[FR Doc. 98–19299 Filed 7–17–98; 8:45 am]

BILLING CODE 4910–62–P

DEPARTMENT OF TRANSPORTATION

Aviation Proceedings, Agreements Filed During the Week Ending July 10, 1998

The following Agreements were filed with the Department of Transportation under the provisions of 49 U.S.C. Sections 412 and 414. Answers may be filed within 21 days of date of filing.

Docket Number: OST–98–4036.
Date Filed: July 9, 1998.
Parties: Members of the International Air Transport Association.
Subject: PTC2 ME–AFR 0016 dated June 30, 1998, Middle East—Africa Resos r1–18, PTC2 ME–AFR 0017 dated June 30, 1998—Minutes, PTC2 ME—AFR Fares 0013 dated July 7, 1998—Tables, Intended effective date: October 1, 1998.

Docket Number: OST–98–4037.
Date Filed: July 9, 1998.
Parties: Members of the International Air Transport Association.
Subject: PTC2 EUR–ME 0057 dated July 7, 1998 r1–8,PTC2 EUR–ME 0058 dated July 7, 1998 r9, Europe—Middle East Expedited Resolutions, Intended effective date: as early as August 15, 1998.

Docket Number: OST–98–4038.
Date Filed: July 9, 1998.
Parties: Members of the International Air Transport Association.
Subject: PTC3 Telex Mail Vote 949, Taiwan-Japan fares, r1—first class fares, r2—intermediate class fares, PTC3 Telex Mail Vote 950, Thailand—Viet Nam fares, r3—reso 010r, Intended effective date: September 1, 1998 (MV949), July 27, 1998 (MV950).

Dorothy W. Walker,

Federal Register Liaison.

[FR Doc. 98–19298 Filed 7–17–98; 8:45 am]

BILLING CODE 4910–62–P

DEPARTMENT OF TRANSPORTATION

Notice of Applications for Certificates of Public Convenience and Necessity and Foreign Air Carrier Permits Filed Under Subpart Q During the Week Ending July 10, 1998

The following Applications for Certificates of Public Convenience and Necessity and Foreign Air Carrier

Permits were filed under Subpart Q of the Department of Transportation's Procedural Regulations (See 14 CFR 302.1701 et. seq.). The due date for Answers, Conforming Applications, or Motions to Modify Scope are set forth below for each application. Following the Answer period DOT may process the application by expedited procedures. Such procedures may consist of the adoption of a show-cause order, a tentative order, or in appropriate cases a final order without further proceedings.

Docket Number: OST–98–4032.

Date Filed: July 8, 1998.

Due Date for Answers, Conforming Applications, or Motions to Modify Scope August 5, 1998.

Description: Application of Gemini Air Cargo, Inc. pursuant to 49 U.S.C. 41102 and Subpart Q, applies for a certificate of public convenience and necessity authorizing it to provide scheduled foreign air transportation of property and mail between any point or points in the United States, or any territory or possession of the United States, on the one hand, and any point or points in the countries listed in this application.

Docket Number: OST–98–4046.

Date Filed: July 10, 1998.

Due Date for Answers, Conforming Applications, or Motions to Modify Scope August 7, 1998.

Description: Application of Emery Worldwide Airlines, Inc. pursuant to 49 U.S.C. 41102 and Subpart Q, applies to amend segment 1 of its Route 598 certificate to engage in scheduled foreign air transportation of property and mail between any point or points in the United States and any point or points in the countries listed in this application.

Dorothy W. Walker,

Federal Register Liaison.

[FR Doc. 98–19297 Filed 7–17–98; 8:45 am]

BILLING CODE 4910–62–P

DEPARTMENT OF TRANSPORTATION

Federal Aviation Administration

Notice of Intent To Rule on Application To Use the Revenue From a Passenger Facility Charge (PFC) at Blue Grass Airport, Lexington, KY

AGENCY: Federal Aviation Administration (FAA), DOT.

ACTION: Notice of Intent to Rule on Application.

SUMMARY: The FAA proposes to rule and invites public comment on the application to use the revenue from a PFC at Blue Grass Airport under the provisions of the Aviation Safety and Capacity Expansion Act of 1990 (Title IX of the Omnibus Budget Reconciliation Act of 1990) (Public Law 101–508) and Part 158 of the Federal Aviation Regulations (14 CFR Part 158).

DATES: Comments must be received on or before August 19, 1998.

ADDRESSES: Comments on this application may be mailed or delivered in triplicate to the FAA at the following address: Memphis Airports District Office, 3385 Airways Boulevard, Suite #302, Memphis, TN 38116–3841.

In addition, one copy of any comments submitted to the FAA must be mailed or delivered to Mr. Jon Zachem, Executive Director of the Blue Grass Airport at the following address: Lexington-Fayette Urban County Airport Board, 4000 Versailles Road, Lexington, KY 40510.

Air carriers and foreign air carriers may submit copies of written comments previously provided to the Blue Grass Airport under section 158.23 of Part 158.

FOR FURTHER INFORMATION CONTACT: Cynthia K. Wills, Program Manager, Memphis Airports District office, 3385 Airways Boulevard, Suite #302, Memphis, TN 38116–3841, (901) 544–3495 Extension 16. The application may be reviewed in person at this location.

SUPPLEMENTARY INFORMATION: The FAA proposes to rule and invites public comment on the application to use the revenue from a PFC at Blue Grass Airport under provisions of the Aviation Safety and Capacity Expansion Act of 1990 (Title IX of the Omnibus Budget Reconciliation Act of 1990) (Public Law 101–508) and Part 158 of the Federal Aviation Regulations (14 CFR Part 158).

On July 13, 1998, the FAA determined that the application to use the revenue from a PFC submitted by Lexington-Fayette Urban County Airport Board was substantially complete within the requirements of section 158.25 of Part 158. The FAA will approve or disapprove the application, in whole or in part, no later than October 29, 1998.

The following is a brief overview of the application.

PFC Application Number: 98–04–U–00–LEX.

Level of the proposed PFC: $3.00.

Actual charge effective date: November 1, 1993.

Estimated charge expiration date: September 1, 2005.

Total estimated PFC revenue: $329,563.

Brief description of proposed project: Design and construction of a centralized glycol storage facility.

Class or classes of air carriers which the public agency has requested not be required to collect PFCs: Part 135, non-scheduled, whole-plane charter basis (Air Taxi Operators).

Any person may inspect the application in person at the FAA office listed above under **FOR FURTHER INFORMATION CONTACT**.

In addition, any person may, upon request, inspect the application, notice and other documents germane to the application in person at the Blue Grass Airport.

Issued in Memphis, Tennessee, on July 13, 1998.

LaVerne F. Reid,

Manager, Airports District Office, Southern Region.

[FR Doc. 98–19295 Filed 7–17–98; 8:45 am]

BILLING CODE 4910–13–M

DEPARTMENT OF TRANSPORTATION

Federal Aviation Administration

Notice of Passenger Facility Charge (PFC) Approvals and Disapprovals

AGENCY: Federal Aviation Administration (FAA), DOT.

ACTION: Monthly Notice of PFC Approvals and Disapprovals. In June 1998, there were 12 applications approved. Additionally, three approved amendments to previously approved applications are listed.

SUMMARY: The FAA publishes a monthly notice, as appropriate, of PFC approvals and disapprovals under the provisions of the Aviation Safety and Capacity Expansion Act of 1990 (Title IX of the Omnibus Budget Reconciliation Act of 1990) (Public Law 101–508) and Part 158 of the Federal Aviation Regulations (14 CFR Part 158). This notice is published pursuant to paragraph d of section 158.29.

PFC Applications Approved

Public Agency: Kenton County Airport Board, Covington, Kentucky.

Application Number: 98–04–C–00–CVG.

Application Type: Impose and use a PFC.

PFC Level: $3.00.

Total PFC Revenue Approved in This Decision: $32,911,000.

Earliest Charge Effective Date: April 1, 1999.

Estimated Charge Expiration Date: January 1, 2001.

Classes of Air Carriers Not Required to Collect PFC's: (1) Part 121 supplemental operators which operate at the airport without an operating

agreement with the public agency and which enplane less than 1,500 passengers per year; and (2) Part 135 on-demand air taxis, both fixed wing and rotary.

Determination: Approved. Based on information contained in the public agency's application, the FAA has determined that each proposed class accounts for less than 1 percent of the total annual enplanements at Cincinnati/Northern Kentucky International Airport.

Brief Description of Projects Approved for Collection and Use:

Southwest detention facility (including land purchase).
Runway 35R large hold pad and deicing recovery system.
Perimeter road at security identification display area fence.
Fixed base operator apron and taxiway construction.

Decision Date: June 3, 1998.

FOR FURTHER INFORMATION CONTACT: Tommy L. Dupree, Memphis Airports District Office, (901) 544–3495.

Public Agency: Roanoke Regional Airport Commission, Roanoke, Virginia.

Application Number: 98–01–C–00–ROA.

Application Type: Impose and use a PFC.

PFC Level: $3.00.

Total PFC Revenue Approved in This Decision: $7,154,143.

Earliest Charge Effective Date: September 1, 1998.

Estimated Charge Expiration Date: March 1, 2006.

Classes of Air Carriers Not Required To Collect PFC's: Part 135 on-demand air taxis filing FAA Form 1800–31.

Determination: Approved. Based on information contained in the public agency's application, the FAA has determined that each proposed class accounts for less than 1 percent of the total annual enplanements at Roanoke Regional Airport.

Brief Description of Projects Approved for Collection and Use:

Construct perimeter road.
Install ramp lighting and runway pull boxes.
Construct general aviation apron, taxiways, and access road.
Obstruction removal runway 6 and runway 15.
Rehabilitate aircraft rescue and firefighting (ARFF) vehicle and acquire radios.
Acquire snow removal equipment (SRE).
Acquire handicap passenger lift device.
Construct heliport improvements.
Install airport signage and electrical vault.
Update airport master plan.
Upgrade airport sign system.
Develop air cargo ramp.
Install new terminal main entrance door system.
Runway 24 tunnel rehabilitation.
Construct snow equipment and maintenance building.
Construct lower regional holdroom and escalator.
Demolish building No. 1 for airport development.
Acquire land runway 24 protection zone.

Brief Description of Project Partially Approved for Collection and Use: PFC program formulation and annual administrative costs.

Determination: Partially approved. The FAA has determined that the cost estimated by the public agency for the collection, reporting, and auditing of PFC revenues is excessive. Based on cost requests for similar airports, the FAA used a cost of $3,000 per year to estimate the allowable annual administrative cost.

Brief Description of Disapproved Project: Demolish Building 6 for airport development.

*Determination:*The FAA has determined that since the existing building is not a hazard and does not impede eligible airport development, the project does not meet the PFC eligiblily criteria.

Decision Date: June 10, 1998.

For Further Information Contact: Terry Page, Washington Airports District Office, (703) 285–2305.

Public Agency: City of Redmond, Oregon.

Application Number: 98–02–C–00–RDM.

Application Type: Impose and use a PFC.

PFC Level: $3.00.

Total PFC Revenue Approved in This Decision: $571,248

Earliest Charge Effective Date: October 1, 2000.

Estimated Charge Expiration Date: February 1, 2003.

Class of Air Carriers not Required To Collect PFC's: Part 135 air taxi/commercial operators who conduct operators in air commerce carrying persons for compensation or hire, except air taxi/commercial operators operating public or private charters in aircraft with a seating capacity of 10 or more.

Determination: Approved. Based on information contained in the public agency's application, the FAA has determined that the proposed class accounts for less than 1 percent of the total annual enplanements at Roberts Field—Redmond Municipal Airport.

Brief Description of Projects Approved for Collection and Use:

Construct electrical vault and acquire emergency generator.
Master plan update.
Extend taxiway G and construct taxiways J and M.
Install precision approach path indicator to runway 28.
Construct ARFF facility.
Acquire passenger access lift.
Acquire airport sweeper/broom.
Acquire SRE.

Brief Description of Projects Withdrawn:

Reconstruct taxiway F north and construct exit taxiway.
Construct snow removal equipment and operations facility.
Reconstruct taxiway F south and relocate and construct taxiway H.

Determination: These projects were withdrawn by the public agency in a letter dated March 25, 1998. Therefore, the FAA did not rule on these projects in this decision.

Decision Date: June 16, 1998.

For Further Information Contact: Mary Vargas, Seattle Airports District Office, (425) 227–2660.

Public Agency: Bert Mooney Airport Authority, Butte, Montana.

Application Number: 98–04–C–BTM.

Application Type: Impose and use a PFC

PFC Level: $3.00.

Total PFC Revenue Approved in This Decision: $215,040.

Earliest Charge Effective Date: July 1, 2001.

Estimate Charge Expiration Date: August 1, 2004.

Class of Air Carriers not Required To Collect PFC's: On demand non-scheduled air taxi/commercial operators.

Determination: Approved. Based on the information contained in the public agency's application, the FAA has determined that the proposed class accounts for less than 1 percent of the total annual enplanements at Bert Mooney Airport.

Brief Description of Project Approved for Collection and Use: Land acquisition.

Decision Date: June 17, 1998.

For Further Information Contact: David P. Gabbert, Helena Airports District Office, (406) 449–5271.

Public Agency: County of Routt, Hayden, Colorado.

Application Number: 98–03–C–00–HDN.

Application Type: Impose and use a PFC.

PFC Level: $3.00.

Total PFC Revenue Approved in this Decision: $1,130,176.

Earliest Charge Effective Date: September 1, 1998.

Estimated Charge Expiration Date: December 1, 2002.

Class of Air Carriers not Required To Collect PFC's: None.

Brief Description of Projects Approved for Collection and Use:

Construct ARFF/SRE building.
Perimeter fencing.
Terminal area master plan study.
Terminal holdroom expansion.
Commercial apron overlay and expansion.
SRE.

Decision Date: June 18, 1998.

For Further Information Contact: Christopher Schaffer, Denver Airports District Office, (303) 342–1258.

Public Agency: Jackson Hole Airport Board, Jackson, Wyoming.

Application Number: 98–05–I–00–JAC.

Application Type: Impose a PFC.

PFC Level: $3.00.

Total PFC Revenue Approved in This Decision: $1,850,000.

Earliest Charge Effective Date: August 1, 1998.

Estimated Charge Expiration Date: January 1, 2003.

Class of Air Carriers not Required To Collect PFC's: None.

Brief Description of Project Approved for Collection Only: Overlay runway and safety areas.

Decision Date: June 18, 1998.

For Further Information Contact: Christopher Schaffer, Denver Airports District Office, (303) 342–1258.

Public Agency: City of San Jose, California.

Application Number: 98–06–I–00–SJC.

Application Type: Impose a PFC.

PFC Level: $3.00.

Total PFC Revenue Approved in This Decision: $35,000,000.

Earliest Charge Effective Date: October 1, 1998.

Estimated Charge Expiration Date: February 1, 2001.

Class of Air Carriers not Required to Collect PFC's: Air taxi/commercial operators exclusively filing FAA Form 1800–31.

Determination: Approved. Based on information contained in the public agency's application, the FAA has determined that the proposed class accounts for less than 1 percent of the total annual enplanements at San Jose International Airport.

Brief Description of Project Approved for Collection Only: Runway 12R/30L and taxiway connections reconstruction to 8,900 linear feet.

Decision Date: June 22, 1998.

For Further Information Contact: Maryls Vandervelde, San Francisco Airports District Office, (650) 876–2806.

Public Agency: Port of Seattle, Seattle, Washington.

Application Number: 98–04–C–00–SEA.

Application Type: Impose and use a PFC.

PFC Level: $3.00.

Total PFC Revenue Approved in This Decision: $852,885,000.

Earliest Charge Effective Date: January 1, 2004.

Estimated Charge Expiration Date: January 1, 2023.

Class of Air Carriers not Required to Collect PFC'S: None.

Brief Description of Projects Approved for Use:

Regional ARFF training facility.
Runways 16L–16R safety area improvements.

Brief Description of Project Partially Approved for Use: Passenger conveyance system.

Determination: Partially approved. The costs associated with the refurbishment of the train maintenance facility and the temporary transportation are not eligible.

Brief Description of Projects Approved for Collection and Use:

Third runway.
Concurse A expansion.
Access roadway improvements.

Brief Description of Projects Approved for Collection Only:

Security system upgrade.
Noise remedy program.
Airfield pavement and infrastructure improvements: taxiway pavement replacement; transitional navigation aids and lighting system; apron pavement replacement.

Brief Description of Project Approved for Collection Only: Terminal infrastructure upgrades.

Determination: Partially approved.The FAA has determined that the public agency did not provide a sufficient description or justification for several of the proposed elements to allow a determination of nominal eligibility for those elements. The elements in question include the upgrades of lighting fixtures, ceilings, floorings, wall finishes, restrooms, and utility systems; the International Arrivals facility; the seismic upgrades; and the commuter terminal and signage upgrades.

Decision Date: June 24, 1998.

For Further Information Contact: Mary Vargas, Seattle Airports District Office, (425) 227–2660.

Public Agency: County of Del Norte, Crescent City, California.

Application Number: 98–01–C–00–CEC.

Application Type: Impose and use a PFC.

PFC Level: $3.00.

Total PFC Revenue Approved in This Decision: $58,330.

Earliest Charge Effective Date: September 1, 1998.

Estimated Charge Expiration Date: September 1, 2001.

Class of Air Carriers not Required to Collect PFC's: None.

Brief Description of Project Approved for Collection and Use:

Airport sign system.
Obstruction removal.
Update airfield marking.
Part 139—certification/safety compliance.
Airport rotating beacon and tower.
Site development and construction of access taxiways phase 1.
Terminal apron expansion.

Brief Description of Project Disapproved: Rehabilitate emergency generator system.

Determination: Disapproved. The FAA has determined that removal of an underground fuel storage tank and replacement with an above ground tank is not included in 49 U.S.C. 47102(3)(F). Rather, the replacement of underground storage tanks falls within the Resource Conservation and Recovery Act, which is not among the Acts included in the definition of airport development in 49 U.S.C. 47102(3)(F). Therefore, this project does not meet the requirements of § 158.15(b).

Decision Date: June 26, 1998.

For Further Information Contact: Marlys Vandervelde, San Francisco Airports District Office, (650) 876–2806.

Public Agency: City of Sioux City, Iowa.

Application Number: 98–03–C–00–SUX. .

Application Type: Impose and use a PFC.

PFC Level: $3.00.

Total PFC Revenue Approved in This Decision: $610,536.

Earliest Charge Effective Date: December 1, 2001.

Estimated Charge Expiration Date: March 1, 2004.

Class of Air Carriers Not Required To Collect PFC's: None.

Brief Description of Projects Approved for Collection and Use:

Rehabilitation of taxiway Bravo.
Reconstruction of taxiway Charlie and the air carrier ramp.
Update airport master plan.
Replacement of snow plow 29.
Reconstruction of taxiway Alpha (south).

Reconstruction of taxiway Bravo. Reconstruction of taxiway Echo.

Decision date: June 26, 1998.

For Further Information Contact: Lorna Sandridge, Central Region Airports Division, (816) 426–4730.

Public Agency: Metropolitan Knoxville Airport Authority, Knoxville, Tennessee.

Application Number: 98–06–C–00–TYS. .

Application Type: Impose and use a PFC.

PFC Level: $3.00.

Total PFC Revenue Approved in This Decision: $57,921,122.

Earliest Charge Effective Date: May 1, 1999.

Estimated Charge Expiration Date: July 1, 2021.

Class of Air Carriers Not Required To Collect PFC's: Nonscheduled, whole-plane charter operators by air taxi/commercial operators filing FAA Form 1800–31.

Determination: Approved. Based on information contained in the public agency's application, the FAA has determined that the proposed class accounted for less than 1 percent of the total annual enplanements at McGhee Tyson Airport.

Brief Description of Projects Approved for Collection and Use: Terminal construction/rehabilitation.

Decision Date: June 26, 1998.

For Further Information Contact: Jerry Bowers, Memphis Airports District Office, (901) 544–3495.

Public Agency: Tri-State Airport Authority, Huntington, West Virginia.

Application Number: 98–03–C–00–HTS.

Application Type: Impose and use a PFC.

PFC Level: $3.00.

Total PFC Revenue Approved in This Decision: $365,138.

Earliest Charge Effective Date: February 1, 1999.

Estimated Charge Expiration Date: March 1, 2001.

Class of Air Carriers Not Required To Collect PFC's: (1) Unscheduled Part 135 charter operators for hire to the general public; and (2) unscheduled Part 121 charter operators for hire to the general public.

Determination: Approved. Based on information contained in the public agency's application, the FAA has determined that the proposed class accounted for less than 1 percent of the total annual enplanements at Tri-State Airport.

Brief Description of Projects Approved for Collection and Use:

Prepare PFC application number 3.

Design and construct SRE building.

Purchase aircraft de-icing truck.

Purchase four-wheel drive pickup with snowplow.

Acquire security vehicle.

Acquire self propelled access lift.

Drainage/de-icing study and drainage rehabilitation.

Reseal and rehabilitate airline ramp.

Decision Date: June 26, 1998.

For Further Information Contact: Elonza Turner, Beckley Airports Field Office, (304) 252–6216.

Amendments to PFC Approvals

Amendment No. city, state	Amendment approved date	Original Approved net PFC revenue	Amended Approved Net PFC revenue	Original estimated charge exp. date	Amended estimated charge exp. date
94–02–C–03–DAY, Dayton, OH	06/16/98	$58,377,638	$45,742,740	04/01/11	01/01/10
94–02–C–02–SUX, Sioux City, IA	06/22/98	2,242,569	1,895,024	06/01/06	12/01/01
94–01–C–02–ISP, Islip, NY	06/29/98	19,418,406	21,290,023	01/01/06	04/01/10

Issued in Washington, DC, on July 15, 1998.

Eric Gabler,

Manager, Passenger Facility Charge Branch.

[FR Doc. 98–19296 Filed 7–17–98; 8:45 am]

BILLING CODE 4910–13–M

DEPARTMENT OF TRANSPORTATION

National Highway Traffic Safety Administration

Denial of Motor Vehicle Defect Petition, DP98–004

AGENCY: National Highway Traffic Safety Administration (NHTSA), United States Department of Transportation.

ACTION: Denial of petition for a defect investigation.

SUMMARY: This notice sets forth the reasons for the denial of a petition submitted to NHTSA under 49 U.S.C. 30162, requesting that the agency commence a proceeding to determine the existence of a defect related to motor vehicle safety. The petition is hereinafter identified as DP98–004.

FOR FURTHER INFORMATION CONTACT: Dr. George Chiang, Office of Defects Investigation (ODI), NHTSA, 400 Seventh Street, SW, Washington, DC 20590. Telephone: (202) 366–5206.

SUPPLEMENTARY INFORMATION: Mr. Edward J. Lucas of Richardson, Texas, submitted a petition dated May 4, 1998, requesting that an investigation be initiated to determine whether Model Year (MY) 1995 Ford Windstar minivans contain a defect related to motor vehicle safety within the meaning of 49 U.S.C. Chapter 301. The petition alleges that MY 1995 Ford Windstars have a defective automatic transmission that can fail, creating a safety hazard. In support of his petition, the petitioner included not only a description of the problems he experienced with his vehicle, but also a printout of transmission complaints registered by other Windstar owners on one Internet website.

MY 1995 Ford Windstars equipped with an AX4S automatic transaxle are the subject vehicles. The transaxle combines a torque converter, fully automatic 4-speed transmission, final drive gearing, and differential into a front wheel drive system.

A review of agency data files, including information reported to NHTSA's Auto Safety Hotline by consumers, indicated that aside from the petition, there were 27 reports concerning failure or malfunction of the transmission in the subject vehicles. These reports address issues of inadvertent downshifting, transmission gear slippage, difficult shifting, noise, and economic/quality problems. There were no reports of injuries or crashes resulting from these transmission failures. These reports appear to be similar in nature to those Internet complaints included with the petition.

It appears that the failure or malfunction of the transmission on the subject vehicles primarily resulted from a cracked forward drive clutch aluminum piston inside the transaxle assembly. Ford Motor Company (Ford) addressed this issue in Technical Service Bulletin (TSB) No. 94–24–7.

The forward clutch piston may crack on its outside diameter, seal groove or bottom. The crack allows transmission fluid to leak through the crack, causing slippage in forward drive and disability of forward drive.

When the transmission is hot, the transmission fluid viscosity becomes low. When the clutch piston is cracked

at a high temperature inside the transaxle, it can lead to faster transmission fluid leaks through the crack. At the same time, the hydraulic pressure decreases until the clutch begins to slip. At worst, the hydraulic pressure in the transmission could drop to a level that could not hold the forward drive clutch engaged, causing no forward drive. Ford was aware of the cracking piston problem, as shown by TSB No. 94–24–7, and replaced the aluminum piston with a steel one for 1996 and later model Windstars.

The petitioner alleged that the cracked piston is a safety hazard because it can disable forward drive function of the transmission and cause sudden loss of drive and subsequent unexpected engagement of the transmission.

Loss of forward drive function due to the cracked piston is not a sudden occurrence. Many transmission slippages will occur prior to the loss of forward drive. Further, this type of clutch disengagement is generally temporary. If the temperature inside transmission drops and the hydraulic pressure in the transmission increased, the forward drive clutch may engage again. The clutch re-engagement is noticeable to the driver, who is able to control the vehicle.

The agency has analyzed the available information concerning the problem alleged in the petition. Based on the information obtained from the evaluation of the ODI complaints and analysis of potential failure modes of the transmission, NHTSA believes that cracking of the forward clutch piston on the subject transaxle does not constitute a safety hazard within the meaning of Chapter 301.

For the reasons presented above, it is unlikely that NHTSA would issue an order for the notification and remedy of a safety-related defect in the subject vehicles at the conclusion of the investigation requested in the petition. Therefore, in view of the need to allocate and prioritize NHTSA's limited resources to best accomplish the agency's safety mission, the petition is denied.

Authority: 49 U.S.C. 30162(d); delegations of authority at CFR 1.50 and 501.8.

Issued on: July 9, 1998.

Kenneth N. Weinstein,

Associate Administrator for Safety Assurance.

[FR Doc. 98–19152 Filed 7–17–98; 8:45 am]

BILLING CODE 4910–59–P

DEPARTMENT OF TRANSPORTATION

National Highway Traffic Safety Administration

[Docket No. NHTSA–98–4074]

Decision That Nonconforming 1998 Mercedes-Benz Gelaendewagen Type 463 Multi-Purpose Passenger Vehicles Are Eligible for Importation

AGENCY: National Highway Traffic Safety Administration (NHTSA), DOT.

ACTION: Notice of decision by NHTSA that nonconforming 1998 Mercedes-Benz Gelaendewagen Type 463 multi-purpose passenger vehicles (MPVs) are eligible for importation.

SUMMARY: This notice announces the decision by NHTSA that 1998 Mercedes-Benz Gelaendewagen Type 463 MPVs not originally manufactured to comply with all applicable Federal motor vehicle safety standards are eligible for importation into the United States because they have safety features that comply with, or are capable of being altered to comply with, all such standards.

DATES: The decision is effective as of July 20, 1998.

FOR FURTHER INFORMATION CONTACT: George Entwistle, Office of Vehicle Safety Compliance, NHTSA (202–366–5306).

SUPPLEMENTARY INFORMATION:

Background

Under 49 U.S.C. 30141(a)(1)(A) (formerly section 108(c)(3)(A)(i)(I) of the National Traffic and Motor Vehicle Safety Act (the Act)), a motor vehicle that was not originally manufactured to conform to all applicable Federal motor vehicle safety standards shall be refused admission into the United States unless NHTSA has decided that the motor vehicle is substantially similar to a motor vehicle originally manufactured for importation into and sale in the United States, certified under 49 U.S.C. 30115 (formerly section 114 of the Act), and of the same model year as the model of the motor vehicle to be compared, and is capable of being readily altered to conform to all applicable Federal motor vehicle safety standards. Where there is no substantially similar U.S.-certified motor vehicle, 49 U.S.C. 30141(a)(1)(B) (formerly section 108(c)(3)(A)(i)(II) of the Act, 15 U.S.C. 1397(c)(3)(A)(i)(II)) permits a nonconforming motor vehicle to be admitted into the United States if its safety features comply with, or are capable of being altered to comply with, all applicable Federal motor vehicle safety standards based on destructive test data or such other evidence as NHTSA decides to be adequate.

Petitions for eligibility decisions may be submitted by either manufacturers or importers who have registered with NHTSA pursuant to 49 CFR Part 592. As specified in 49 CFR 593.7, NHTSA publishes notice in the **Federal Register** of each petition that it receives, and affords interested persons an opportunity to comment on the petition. At the close of the comment period, NHTSA decides, on the basis of the petition and any comments that it has received, whether the vehicle is eligible for importation. The agency then publishes this determination in the **Federal Register**.

Europa International, Inc. of Santa Fe, New Mexico (Registered Importer No. R–91–002) petitioned NHTSA to decide whether 1998 Mercedes-Benz Gelaendewagen Type 463 MPVs are eligible for importation into the United States. NHTSA published notice of the petition on May 15, 1998 (63 FR 27118) to afford an opportunity for public comment. The reader is referred to that notice for a thorough description of the petition. No comments were received in response to the notice. Based on its review of the information submitted by the petitioner, NHTSA has decided to grant the petition.

Vehicle Eligibility Number for Subject Vehicles

The importer of a vehicle admissible under any final determination must indicate on the form HS–7 accompanying entry the appropriate vehicle eligibility number indicating that the vehicle is eligible for entry. VCP–16 is the vehicle eligibility number assigned to vehicles admissible under this determination.

Final Decision

Accordingly, on the basis of the foregoing, NHTSA hereby decides that 1998 Mercedes-Benz Gelaendewagen Type 463 MPVs are eligible for importation into the United States because they have safety features that comply with, or are capable of being altered to comply with, all applicable Federal motor vehicle safety standards.

Authority: 49 U.S.C. 30141(a)(1)(B) and (b)(1); 49 CFR 593.8; delegations of authority at 49 CFR 1.50 and 501.8.

Issued on: July 15, 1998.

Marilynne Jacobs,

Director, Office of Vehicle Safety Compliance.

[FR Doc. 98–19249 Filed 7–17–98; 8:45 am]

BILLING CODE 4910–59–P

DEPARTMENT OF TRANSPORTATION

National Highway Traffic Safety Administration

[Docket No. NHTSA–98–4073]

Notice of Receipt of Petition for Decision That Nonconforming 1995–1996 Ford Bronco Multi-Purpose Passenger Vehicles Are Eligible for Importation

AGENCY: National Highway Traffic Safety Administration, DOT.

ACTION: Notice of receipt of petition for decision that nonconforming 1995–1996 Ford Bronco multi-purpose passenger vehicles (MPVs) are eligible for importation.

SUMMARY: This notice announces receipt by the National Highway Traffic Safety Administration (NHTSA) of a petition for a decision that 1995–1996 Ford Broncos manufactured for sale in Venezuela that were not originally manufactured to comply with all applicable Federal motor vehicle safety standards are eligible for importation into the United States because (1) they are substantially similar to vehicles that were originally manufactured for sale in the United States and that were certified by their manufacturer as complying with the safety standards, and (2) they are capable of being readily altered to conform to the standards.

DATES: The closing date for comments on the petition is August 19, 1998.

ADDRESSES: Comments should refer to the docket number and notice number, and be submitted to: Docket Management, Room PL–401, 400 Seventh St., SW, Washington, DC 20590. [Docket hours are from 10 am to 5 pm].

FOR FURTHER INFORMATION CONTACT: George Entwistle, Office of Vehicle Safety Compliance, NHTSA (202–366–5306).

SUPPLEMENTARY INFORMATION:

Background

Under 49 U.S.C. 30141(a)(1)(A), a motor vehicle that was not originally manufactured to conform to all applicable Federal motor vehicle safety standards shall be refused admission into the United States unless NHTSA has decided that the motor vehicle is substantially similar to a motor vehicle originally manufactured for importation into and sale in the United States, certified under 49 U.S.C. 30115, and of the same model year as the model of the motor vehicle to be compared, and is capable of being readily altered to conform to all applicable Federal motor vehicle safety standards.

Petitions for eligibility decisions may be submitted by either manufacturers or importers who have registered with NHTSA pursuant to 49 CFR Part 592. As specified in 49 CFR 593.7, NHTSA publishes notice in the **Federal Register** of each petition that it receives, and affords interested persons an opportunity to comment on the petition. At the close of the comment period, NHTSA decides, on the basis of the petition and any comments that it has received, whether the vehicle is eligible for importation. The agency then publishes this decision in the **Federal Register**.

Wallace Environmental Testing Laboratories, Inc. of Houston, Texas (''Wallace'') (Registered Importer 90–005) has petitioned NHTSA to decide whether 1995–1996 Ford Broncos manufactured for sale in Venezuela are eligible for importation into the United States. The vehicles which Wallace believes are substantially similar are 1995–1996 Ford Broncos that were manufactured for sale in the United States and certified by their manufacturer, Ford Motor Company, as conforming to all applicable Federal motor vehicle safety standards.

The petitioner claims that it carefully compared the non-U.S. certified 1995–1996 Ford Broncos to their U.S. certified counterparts, and found the vehicles to be substantially similar with respect to compliance with most Federal motor vehicle safety standards.

Wallace submitted information with its petition intended to demonstrate that the non-U.S. certified 1995–1996 Ford Broncos, as originally manufactured, conform to many Federal motor vehicle safety standards in the same manner as their U.S. certified counterparts, or are capable of being readily altered to conform to those standards.

Specifically, the petitioner claims that the non-U.S. certified 1995–1996 Ford Broncos are identical to their U.S. certified counterparts with respect to compliance with Standards Nos. 101 *Controls and Displays*, 102 *Transmission Shift Lever Sequence.* * * *, 103 *Defrosting and Defogging Systems*, 104 *Windshield Wiping and Washing Systems*, 105 *Hydraulic Brake Systems*, 106 *Brake Hoses*, 108 *Lamps, Reflective Devices and Associated Equipment*, 111 *Rearview Mirror*, 113 *Hood Latch Systems*, 114 *Theft Protection*, 116 *Brake Fluid*, 119 *New Pneumatic Tires for Vehicles other than Passenger Cars*, 124 *Accelerator Control Systems*, 201 *Occupant Protection in Interior Impact*, 202 *Head Restraints*, 203 *Impact Protection for the Driver from the Steering Control System*, 204 *Steering Control Rearward Displacement*, 205 *Glazing Materials*, 206 *Door Locks and Door Retention Components*, 207 *Seating Systems*, 209 *Seat Belt Assemblies*, 210 *Seat Belt Assembly Anchorages*, 212 *Windshield Retention*, 214 *Side Impact Protection*, 216 *Roof Crush Resistance*, 219 *Windshield Zone Intrusion*, 301 *Fuel System Integrity*, and 302 *Flammability of Interior Materials*.

Additionally, the petitioner states that the non-U.S. certified 1995–1996 Ford Broncos comply with the Bumper Standard found in 49 CFR Part 581.

Petitioner also contends that the vehicles are capable of being readily altered to meet the following standards, in the manner indicated:

Standard No. 120 *Tire Selection and Rims for Motor Vehicles other than Passenger Cars*: installation of a tire information placard.

Standard No. 208 *Occupant Crash Protection*: installation of a U.S. model air bag at the driver's seating position. The petitioner states that the vehicles are equipped with Type II seat belts at both front and both rear outboard designated seating positions, and with a Type I seat belt at the rear center designated seating position.

The petitioner also states that a vehicle identification number plate must be affixed to the vehicles to meet the requirements of 49 CFR Part 565.

Interested persons are invited to submit comments on the petition described above. Comments should refer to the docket number and be submitted to: Docket Management, Room PL–401, 400 Seventh St., SW, Washington, DC 20590. [Docket hours are from 10 am to 5 pm]. It is requested but not required that 10 copies be submitted.

All comments received before the close of business on the closing date indicated above will be considered, and will be available for examination in the docket at the above address both before and after that date. To the extent possible, comments filed after the closing date will also be considered. Notice of final action on the petition will be published in the **Federal Register** pursuant to the authority indicated below.

Authority: 49 U.S.C. 30141(a)(1)(A) and (b)(1); 49 CFR 593.8; delegations of authority at 49 CFR 1.50 and 501.8.

Issued on: July 15, 1998.

Marilynne Jacobs,

Director, Office of Vehicle Safety Compliance.

[FR Doc. 98–19250 Filed 7–17–98; 8:45 am]

BILLING CODE 4910–59–P

DEPARTMENT OF TRANSPORTATION

National Highway Traffic Safety Administration

[Docket No. NHTSA–98–4072]

Decision That Certain Nonconforming Motor Vehicles Are Eligible for Importation

AGENCY: National Highway Traffic Safety Administration (NHTSA), DOT.

ACTION: Notice of decision by NHTSA that certain nonconforming motor vehicles are eligible for importation.

SUMMARY: This notice announces decisions by NHTSA that certain motor vehicles not originally manufactured to comply with all applicable Federal motor vehicle safety standards are eligible for importation into the United States because they are substantially similar to vehicles originally manufactured for importation into and/or sale in the United States and certified by their manufacturers as complying with the safety standards, and they are capable of being readily altered to conform to the standards.

DATES: These decisions are effective as of July 20, 1998.

FOR FURTHER INFORMATION CONTACT: George Entwistle, Office of Vehicle Safety Compliance, NHTSA (202–366–5306).

SUPPLEMENTARY INFORMATION:

Background

Under 49 U.S.C. 30141(a)(1)(A), a motor vehicle that was not originally manufactured to conform to all applicable Federal motor vehicle safety standards shall be refused admission into the United States unless NHTSA has decided that the motor vehicle is substantially similar to a motor vehicle originally manufactured for importation into and sale in the United States, certified under 49 U.S.C. 30115, and of the same model year as the model of the motor vehicle to be compared, and is capable of being readily altered to conform to all applicable Federal motor vehicle safety standards.

Petitions for eligibility decisions may be submitted by either manufacturers or importers who have registered with NHTSA pursuant to 49 CFR Part 592. As specified in 49 CFR 593.7, NHTSA publishes notice in the **Federal Register** of each petition that it receives, and affords interested persons an opportunity to comment on the petition. At the close of the comment period, NHTSA decides, on the basis of the petition and any comments that it has received, whether the vehicle is eligible for importation. The agency then publishes this decision in the **Federal Register**.

NHTSA received petitions from registered importers to decide whether the vehicles listed in Annex A to this notice are eligible for importation into the United States. To afford an opportunity for public comment, NHTSA published notice of these petitions as specified in Annex A. The reader is referred to those notices for a thorough description of the petitions. No comments were received in response to these notices. Based on its review of the information submitted by the petitioners, NHTSA has decided to grant the petitions.

Vehicle Eligibility Number for Subject Vehicles

The importer of a vehicle admissible under any final decision must indicate on the form HS–7 accompanying entry the appropriate vehicle eligibility number indicating that the vehicle is eligible for entry. Vehicle eligibility numbers assigned to vehicles admissible under this decision are specified in Annex A.

Final Decision

Accordingly, on the basis of the foregoing, NHTSA hereby decides that each motor vehicle listed in Annex A to this notice, which was not originally manufactured to comply with all applicable Federal motor vehicle safety standards, is substantially similar to a motor vehicle manufactured for importation into and/or sale in the United States, and certified under 49 U.S.C. 30115, as specified in Annex A, and is capable of being readily altered to conform to all applicable Federal motor vehicle safety standards.

Authority: 49 U.S.C. 30141(a)(1)(A) and (b)(1); 49 CFR 593.8; delegations of authority at 49 CFR 1.50 and 501.8.

Issued on: July 15, 1998.

Marilynne Jacobs,

Director, Office of Vehicle Safety Compliance.

Annex A—Nonconforming Motor Vehicles Decided To Be Eligible for Importation

1. Docket No. NHTSA–98–3627
   Nonconforming Vehicle: 1990–1993 Mercedes-Benz 250E and 1994–1995 E250
   Substantially similar U.S.-certified vehicle: 1990–1993 Mercedes-Benz 300E and 1994–1995 E300
   Notice of Petition published at: 63 FR 13911 (March 23, 1998)
   Vehicle Eligibility Number: VSP–245
2. Docket No. NHTSA–98–3628
   Nonconforming Vehicles: 1994 Mercedes-Benz C220
   Substantially similar U.S.-certified vehicles: 1994 Mercedes-Benz C220
   Notice of Petition published at: 63 FR 13910 (March 23, 1998)
   Vehicle Eligibility Number: VSP–246
3. Docket No. NHTSA–98–3630
   Nonconforming Vehicles: 1993–1998 Kawasaki ZZR1100
   Substantially similar U.S.-certified vehicles: 1993–1998 Kawasaki ZX1100
   Notice of Petition published at: 63 FR 13909 (March 23, 1998)
   Vehicle Eligibility Number: VSP–247
4. Docket No. NHTSA–98–3658
   Nonconforming Vehicles: 1995 Bentley Turbo R
   Substantially similar U.S.-certified vehicles: 1995 Bentley Turbo R
   Notice of Petition published at: 63 FR 15480 (March 31, 1998)
   Vehicle Eligibility Number: VSP–243
5. Docket No. NHTSA–98–3660
   Nonconforming Vehicles: 1992–1996 Ducati 600SS
   Substantially similar U.S.-certified vehicles: 1992–1996 Ducati 750SS
   Notice of Petition published at: 63 FR 15480 (March 31, 1998)
   Vehicle Eligibility Number: VSP–241
6. Docket No. NHTSA–98–3661
   Nonconforming Vehicles: 1994–1998 Mercedes-Benz E320
   Substantially similar U.S.-certified vehicles: 1994–1998 Mercedes-Benz E320
   Notice of Petition published at: 63 FR 15482 (March 31, 1998)
   Vehicle Eligibility Number: VSP–240
7. Docket No. NHTSA–98–3674
   Nonconforming Vehicles: 1995–1997 BMW 5 Series
   Substantially similar U.S.-certified vehicles: 1995–1997 BMW 5 Series
   Notice of Petition published at: 63 FR 17041 (April 7, 1998)
   Vehicle Eligibility Number: VSP–249
8. Docket No. NHTSA–98–3678
   Nonconforming Vehicles: 1995–1997 BMW 3 Series
   Substantially similar U.S.-certified vehicles: 1995–1997 BMW 3 Series
   Notice of Petition published at: 63 FR 17042 (April 7, 1998)
   Vehicle Eligibility Number: VSP–248
9. Docket No. NHTSA–98–3708
   Nonconforming Vehicles: 1998 Harley Davidson FX, FL, and XL
   Substantially similar U.S.-certified vehicles: 1998 Harley Davidson FX, FL, and XL
   Notice of Petition published at: 63 FR 18250 (April 14, 1998)
   Vehicle Eligibility Number: VSP–253
10. Docket No. NHTSA–98–3709
   Nonconforming Vehicles: 1995 Jeep Wrangler manufactured for Middle Eastern and other foreign markets
   Substantially similar U.S.-certified

vehicles: 1995 Jeep Wrangler
Notice of Petition published at: 63 FR 18249 (April 14, 1998)
Vehicle Eligibility Number: VSP–255
11. Docket No. NHTSA–98–3710
Nonconforming Vehicles: 1993 Jeep Cherokee manufactured for Middle Eastern and other foreign markets
Substantially similar U.S.-certified vehicles: 1995 Jeep Cherokee
Notice of Petition published at: 63 FR 18248 (April 14, 1998)
Vehicle Eligibility Number: VSP–254
12. Docket No. NHTSA–98–3715
Nonconforming Vehicles: 1981–1988 Toyota Landcruiser
Substantially similar U.S.-certified vehicles: 1981–1988 Toyota Landcruiser
Notice of Petition published at: 63 FR 18489 (April 15, 1998)
Vehicle Eligibility Number: VSP–252
13. Docket No. NHTSA–98–3716
Nonconforming Vehicles: 1995–1998 Ford Windstar
Substantially similar U.S.-certified vehicles: 1995–1998 Ford Windstar
Notice of Petition published at: 63 FR 18491 (April 15, 1998)
Vehicle Eligibility Number: VSP–250
14. Docket No. NHTSA–98–3717
Nonconforming Vehicles: 1990 Volkswagen Transporter
Substantially similar U.S.-certified vehicles: 1990 Volkswagen Vanagon
Notice of Petition published at: 63 FR 18490 (April 15, 1998)
Vehicle Eligibility Number: VSP–251
15. Docket No. NHTSA–98–3806
Nonconforming Vehicles: 1995 Ferrari 456
Substantially similar U.S.-certified vehicles: 1995 Ferrari 456
Notice of Petition published at: 63 FR 25895 (May 11, 1998)
Vehicle Eligibility Number: VSP–256
16. Docket No. NHTSA–98–3809
Nonconforming Vehicles: 1997–1998 Mercedes-Benz SLK
Substantially similar U.S.-certified vehicles: 1997–1998 Mercedes-Benz SLK
Notice of Petition published at: 63 FR 27117 (May 15, 1998)
Vehicle Eligibility Number: VSP–257
17. Docket No. NHTSA–98–3811
Nonconforming Vehicles: 1990–1993 Bentley Continental R
Substantially similar U.S.-certified vehicles: 1990–1993 Bentley Continental R
Notice of Petition published at: 63 FR 27116 (May 16, 1998)
Vehicle Eligibility Number: VSP–258
18. Docket No. NHTSA–98–3822
Nonconforming Vehicles: 1996–1998 BMW Z3
Substantially similar U.S.-certified vehicles: 1996–1998 BMW Z3
Notice of Petition published at: 63 FR 27343 (May 18, 1998)
Vehicle Eligibility Number: VSP–260
19. Docket No. NHTSA–98–3823
Nonconforming Vehicles: 1995 Ferrari F355
Substantially similar U.S.-certified vehicles: 1995 Ferrari F355
Notice of Petition published at: 63 FR 27344 (May 18, 1998)
Vehicle Eligibility Number: VSP–259
20. Docket No. NHTSA–98–3851
Nonconforming Vehicles: 1995 Mercedes-Benz C280
Substantially similar U.S.-certified vehicles: 1995 Mercedes-Benz C280
Notice of Petition published at: 63 FR 27616 (May 19, 1998)
Vehicle Eligibility Number: VSP–262
21. Docket No. NHTSA–98–3852
Nonconforming Vehicles: 1997 Porsche Boxster
Substantially similar U.S.-certified vehicles: 1997 Porsche Boxster
Notice of Petition published at: 63 FR 27617 (May 19, 1998)
Vehicle Eligibility Number: VSP–261

[FR Doc. 98–19251 Filed 7–17–98; 8:45 am]

BILLING CODE 4910–59–P

DEPARTMENT OF TRANSPORTATION

Surface Transportation Board

[STB Ex Parte No. 558 (Sub–No. 1)]

Railroad Cost of Capital—1997

AGENCY: Surface Transportation Board.

ACTION: Notice of decision.

SUMMARY: On July 20, 1998, the Board served a decision to update its estimate of the railroad industry's cost of capital for 1997. The composite cost of capital rate for 1997 is found to be 11.8%, based on a current cost of debt of 7.2%; a cost of common equity capital of 13.8%; a cost of preferred equity capital of 6.1%; and a 29.67% debt, 70.28% common equity, 0.05% preferred equity capital structure mix. The cost of capital finding made in this proceeding will be used in a variety of Board proceedings.

EFFECTIVE DATE: This action is effective July 9, 1998.

FOR FURTHER INFORMATION CONTACT: Leonard J. Blistein, (202) 565–1529. [TDD for the hearing impaired: (202) 565–1695.]

SUPPLEMENTARY INFORMATION: The cost of capital finding in this decision shall be used to evaluate the adequacy of railroad revenues for 1997 under the standards and procedures promulgated in *Standards for Railroad Revenue Adequacy,* 3 I.C.C.2d 261 (1986). This finding may also be used in other Board proceedings involving, for example, the prescription of maximum reasonable rate levels and proposed abandonments of rail lines. Additional information is contained in the Board's decision. To obtain a copy of the full decision, write to, call, or pick up in person from: DC NEWS & DATA, INC., Room 210, 1925 K Street, N.W., Washington, DC 20423. Telephone: (202) 289–4357. [Assistance for the hearing impaired is available through TDD services (202) 565–1695.] The decision is also available on the Board's internet site at www.stb.dot.gov.

Environmental and Energy Considerations

This action will not significantly affect either the quality of the human environment or the conservation of energy resources.

Regulatory Flexibility Analysis

Pursuant to 5 U.S.C. 605(b), we conclude that our action in this proceeding will not have a significant economic impact on a substantial number of small entities. The purpose and effect of this action are to update the annual railroad industry cost of capital finding by the Board. No new reporting or other regulatory requirements are imposed, directly or indirectly, on small entities.

Authority: 49 U.S.C. 10704(a).

Decided: July 9, 1998.

By the Board, Chairman Morgan and Vice Chairman Owen.

Vernon A. Williams,

Secretary.

[FR Doc. 98–19286 Filed 7–17–98; 8:45 am]

BILLING CODE 4915–00–P

DEPARTMENT OF TRANSPORTATION

Surface Transportation Board

[STB Docket No. AB–547X]

Roaring Fork Railroad Holding Authority—Abandonment Exemption—in Garfield, Eagle and Pitkin Counties, CO

On June 30, 1998, Roaring Fork Railroad Holding Authority (RFRHA) filed with the Surface Transportation Board (Board) a petition under 49 U.S.C. 10502 for exemption from the provisions of 49 U.S.C. 10903–10905 [1] to abandon its line of railroad known as the Aspen Branch, extending from milepost 360.22 near Glenwood Springs

[1] RFRHA seeks exemptions from the offer of financial assistance (OFA) provisions of 49 U.S.C. 10904 and the public use provisions of 49 U.S.C. 10905. These exemption requests will be addressed in the final decision.

to the end of the line at milepost 393.66 near Woody Creek, a total distance of approximately 33.44 miles in Garfield, Eagle and Pitkin Counties, CO. The line traverses U.S. Postal Service Zip Codes 81601, 81602, 81621, 81623, 81628, 81654 and 81656. There are no stations on the line.

The line contains federally granted rights-of-way. Any documentation in RFRHA's possession will be made available promptly to those requesting it.

The interest of railroad employees will be protected by the conditions set forth in *Oregon Short Line R. Co.—Abandonment—Goshen,* 360 I.C.C. 91 (1979).

By issuance of this notice, the Board is instituting an exemption proceeding pursuant to 49 U.S.C. 10502(b). A final decision will be issued by October 16, 1998.

Unless an exemption is granted from the OFA provisions of 49 U.S.C. 10904, any OFA under 49 CFR 1152.27(b)(2) will be due no later than 10 days after service of a decision granting the petition for exemption. Each OFA must be accompanied by a $1,000 filing fee. *See* 49 CFR 1002.2(f)(25).

All interested persons should be aware that, following abandonment of rail service and salvage of the line, the line may be suitable for other public use, including interim trail use. Unless an exemption is granted from the public use provisions of 49 U.S.C. 10905, any request for a public use condition under 49 CFR 1152.28 or for trail use/rail banking under 49 CFR 1152.29 will be due no later than August 10, 1998.[2] Each trail use request must be accompanied by a $150 filing fee. *See* 49 CFR 1002.2(f)(27).

All filings in response to this notice must refer to STB Docket No. AB–547X and must be sent to: (1) Surface Transportation Board, Office of the Secretary, Case Control Unit, 1925 K Street, N.W., Washington, DC 20423–0001; and (2) Charles H. Montange, 426 NW 162d Street, Seattle, WA 98177.

Persons seeking further information concerning abandonment procedures may contact the Board's Office of Public Services at (202) 565–1592 or refer to the full abandonment or discontinuance regulations at 49 CFR part 1152. Questions concerning environmental issues may be directed to the Board's Section of Environmental Analysis (SEA) at (202) 565–1545. [TDD for the hearing impaired is available at (202) 565–1695.]

An environmental assessment (EA) (or environmental impact statement (EIS), if necessary) prepared by SEA will be served upon all parties of record and upon any agencies or other persons who commented during its preparation. Other interested persons may contact SEA to obtain a copy of the EA (or EIS). EAs in these abandonment proceedings normally will be made available within 60 days of the filing of the petition. The deadline for submission of comments on the EA will generally be within 30 days of its service.

Board decisions and notices are available on our website at ''WWW.STB.DOT.GOV.''

Decided: July 14, 1998.

By the Board, Joseph H. Dettmar, Acting Director, Office of Proceedings.

Vernon A. Williams,

Secretary.

[FR Doc. 98–19285 Filed 7–17–98; 8:45 am]

BILLING CODE 4915–00–P

[2] Included in its petition is a request by RFRHA to railbank the line and a statement of its willingness to assume full responsibility for the management and use of the right-of-way and for the payment of taxes and other liabilities. This request by RFRHA to railbank its own line will be addressed in the final decision.

DEPARTMENT OF TRANSPORTATION

Surface Transportation Board

[STB Docket No. AB–33 (Sub–No. 122X)]

Union Pacific Railroad Company—Abandonment Exemption—in Monroe and Juneau Counties, WI

Union Pacific Railroad Company (UP) has filed a notice of exemption under 49 CFR Part 1152 Subpart F—*Exempt Abandonments and Discontinuances of Service and Trackage Rights* to abandon and discontinue service over a 8.4-mile line of railroad on the Camp Douglas Industrial Lead from milepost 174.3 near Wyeville to the end of the line at milepost 182.7 near Camp Douglas, in Monroe and Juneau Counties, WI.[1] The line traverses United States Postal Service Zip Codes 54660 and 54618.

UP has certified that: (1) No local traffic has moved over the line for at least 2 years; (2) any overhead traffic on the line can be rerouted over other lines; (3) no formal complaint filed by a user of rail service on the line (or by a state or local government entity acting on behalf of such user) regarding cessation of service over the line either is pending with the Surface Transportation Board (Board) or with any U.S. District Court or has been decided in favor of complainant within the 2-year period; and (4) the requirements at 49 CFR 1105.7 (environmental reports), 49 CFR 1105.8 (historic reports), 49 CFR 1105.11 (transmittal letter), 49 CFR 1105.12 (newspaper publication), and 49 CFR 1152.50(d)(1) (notice to governmental agencies) have been met.

As a condition to this exemption, any employee adversely affected by the abandonment shall be protected under *Oregon Short Line R. Co.—Abandonment—Goshen,* 360 I.C.C. 91 (1979). To address whether this condition adequately protects affected employees, a petition for partial revocation under 49 U.S.C. 10502(d) must be filed. Provided no formal expression of intent to file an offer of financial assistance (OFA) has been received, this exemption will be effective on August 19, 1998, unless stayed pending reconsideration. Petitions to stay that do not involve environmental issues,[2] formal expressions of intent to file an OFA under 49 CFR 1152.27(c)(2),[3] and trail use/rail banking requests under 49 CFR 1152.29 must be filed by July 30, 1998. Petitions to reopen or requests for public use conditions under 49 CFR 1152.28 must be filed by August 10, 1998, with: Surface Transportation Board, Office of the Secretary, Case Control Unit, 1925 K Street, N.W., Washington, DC 20423.

A copy of any petition filed with the Board should be sent to applicant's representative: Joseph D. Anthofer, General Attorney, Union Pacific Railroad Company, 1416 Dodge Street, Room 830, Omaha, NE 68179.

If the verified notice contains false or misleading information, the exemption is void ab initio.

UP has filed an environmental report which addresses the effects of the

[1] Pursuant to 49 CFR 1150.50(d)(2), the railroad must file a verified notice with the Board at least 50 days before the abandonment or discontinuance is to be consummated. The applicant in its verified notice, indicated a proposed consummation date of August 12, 1998. However, because the verified notice was filed on June 30, 1998, consummation may not take place prior to August 19, 1998. Applicant's representative has been contacted and has confirmed that consummation will not take place until August 19, 1998.

Juneau County (County) filed a request for issuance of a notice of interim trail use (NITU) for the entire line pursuant to section 8(d) of the National Trails System Act, 16 U.S.C. 1247(d). The Board will address the County's trail use request and any others that may be filed in a subsequent decision.

[2] The Board will grant a stay if an informed decision on environmental issues (whether raised by a party or by the Board's Section of Environmental Analysis in its independent investigation) cannot be made before the exemption's effective date. *See Exemption of Out-of-Service Rail Lines,* 5 I.C.C.2d 377 (1989). Any request for a stay should be filed as soon as possible so that the Board may take appropriate action before the exemption's effective date.

[3] Each offer of financial assistance must be accompanied by the filing fee, which currently is set at $1000. See 49 CFR 1002.2(f)(25).

abandonment and discontinuance, if any, on the environment and historic resources. The Section of Environmental Analysis (SEA) will issue an environmental assessment (EA) by July 24, 1998. Interested persons may obtain a copy of the EA by writing to SEA (Room 500, Surface Transportation Board, Washington, DC 20423) or by calling SEA, at (202) 565–1545. Comments on environmental and historic preservation matters must be filed within 15 days after the EA becomes available to the public.

Environmental, historic preservation, public use, or trail use/rail banking conditions will be imposed, where appropriate, in a subsequent decision.

Pursuant to the provisions of 49 CFR 1152.29(e)(2), UP shall file a notice of consummation with the Board to signify that it has exercised the authority granted and fully abandoned the line. If consummation has not been effected by UP's filing of a notice of consummation by July 20, 1999, and there are no legal or regulatory barriers to consummation, the authority to abandon will automatically expire.

Board decisions and notices are available on our website at ''WWW.STB.DOT.GOV.''

Decided: July 9, 1998.

By the Board, Joseph H. Dettmar, Acting Director, Office of Proceedings.

Vernon A. Williams,

Secretary.

[FR Doc. 98–19284 Filed 7–17–98; 8:45 am]

BILLING CODE 4915–00–P

UNITED STATES ENRICHMENT CORPORATION

Sunshine Act Meeting

AGENCY: United States Enrichment Corporation.

SUBJECT: Board of Directors.

TIME AND DATE: 5:00 p.m., Wednesday, July 22, 1998.

PLACE: USEC Corporate Headquarters, 6903 Rockledge Drive, Bethesda, MD 20817.

STATUS: The meeting will be closed to the public.

MATTER TO BE CONSIDERED: Privatization of the Corporation.

CONTACT PERSON FOR MORE INFORMATION: Elizabeth Stuckle at 301/564–3399.

Dated: July 15, 1998.

Carol K. DiSibio,

Clerk to the Board.

[FR Doc. 98–19345 Filed 7–16–98; 9:11 am]

BILLING CODE 8720–01–M

Corrections

Federal Register

Vol. 63, No. 138

Monday, July 20, 1998

This section of the FEDERAL REGISTER contains editorial corrections of previously published Presidential, Rule, Proposed Rule, and Notice documents. These corrections are prepared by the Office of the Federal Register. Agency prepared corrections are issued as signed documents and appear in the appropriate document categories elsewhere in the issue.

FEDERAL COMMUNICATIONS COMMISSION

47 CFR Part 1

[MD Docket No. 98-36; FCC 98-115]

Assessment and Collection of Regulatory Fees for Fiscal Year 1998

Correction

In rule document 98–17222 beginning on page 35847, in the issue of Wednesday, July 1, 1998, make the following correction:

On page 35859, in the table, above § 1.1154, insert ''4. Section 1.1154 is revised to read as follows:''.

BILLING CODE 1505-01-D

DEPARTMENT OF THE INTERIOR

Office of Surface Mining Reclamation and Enforcement

30 CFR Part 918

[SPATS No. LA-017-FOR]

Louisiana Regulatory Program

Correction

In rule document 98–12249 beginning on page 25391, in the issue of Friday, May 8, 1998, make the following corrections:

1. On page 25393, in the first column, under the heading, *E. Section 5333. Hydrologic Balance: Impoundments*, in the sixth line, ''(120'' should read ''(210''.

2. On page 25394, in the table, in the third column, the second line, ''A.2a.,'' should read ''A.2.a.,''.

BILLING CODE 1505-01-D

federal register

Monday
July 20, 1998

Part II

Department of Energy

Federal Energy Regulatory Commission

18 CFR Part 37

Open Access Same-Time Information System and Standards of Conduct; Final Rule

DEPARTMENT OF ENERGY

Federal Energy Regulatory Commission

18 CFR Part 37

[Docket No. RM95–9–003]

Open Access Same-Time Information System and Standards of Conduct

Issued June 18, 1998.

AGENCY: Federal Energy Regulatory Commission.

ACTION: Order on OASIS-related issues.

SUMMARY: In this order, the Federal Energy Regulatory Commission (the Commission): finds that ''source and sink'' information must be unmasked at the time when a transmission provider updates the transmission reservation posting to show the customer's confirmation that it wishes to finalize a transaction; implements interim procedures for the on-line negotiation of transmission service price discounts; and adopts a comprehensive update of the OASIS Standards and Communications Protocols Document that implements a number of findings made by the Commission in Order No. 889–A and in response to industry suggestions.

DATES: The current S&CP Document (Version 1.1), as modified to incorporate the interim procedures on price negotiation, is to become effective on September 18, 1998. The revised S&CP Document (Version 1.2) is to become effective on December 1, 1998. The revisions to the S&CP Document in § 4.3.7.b, pertaining to the masking of source and sink information, are to become effective on January 1, 1999.

FOR FURTHER INFORMATION CONTACT:

Marvin Rosenberg (Technical Information), Office of Economic Policy, Federal Energy Regulatory Commission, 888 First Street, N.E., Washington, D.C. 20426, (202) 208–1283

William C. Booth (Technical Information), Office of Electric Power Regulation, Federal Energy Regulatory Commission, 888 First Street, N.E., Washington, D.C. 20426, (202) 208–0849

Gary D. Cohen (Legal Information), Office of the General Counsel, Federal Energy Regulatory Commission, 888 First Street, N.E., Washington, D.C. 20426, (202) 208–0321

SUPPLEMENTARY INFORMATION: In addition to publishing the full text of this document in the **Federal Register**, the Commission also provides all interested persons an opportunity to inspect or copy the contents of this document during normal business hours in the Public Reference Room at 888 First Street, N.E., Room 2A, Washington, D.C. 20426.

The Commission Issuance Posting System (CIPS) provides access to the texts of formal documents issued by the Commission. CIPS can be accessed via Internet through FERC's Homepage (http://www.ferc.fed.us) using the CIPS Link or the Energy Information Online icon. The full text of this document will be available on CIPS in ASCII and WordPerfect 6.1 format. CIPS is also available through the Commission's electronic bulletin board service at no charge to the user and may be accessed using a personal computer with a modem by dialing 202–208–1397, if dialing locally, or 1–800–856–3920, if dialing long distance. To access CIPS, set your communications software to 19200, 14400, 12000, 9600, 7200, 4800, 2400, or 1200 bps, full duplex, no parity, 8 data bits and 1 stop bit. User assistance is available at 202–208–2474 or by E-mail to CipsMaster@FERC.fed.us.

This document is also available through the Commission's Records and Information Management System (RIMS), an electronic storage and retrieval system of documents submitted to and issued by the Commission after November 16, 1981. Documents from November 1995 to the present can be viewed and printed. RIMS is available in the Public Reference Room or remotely via Internet through FERC's Homepage using the RIMS link or the Energy Information Online icon. User assistance is available at 202–208–2222, or by E-mail to RimsMaster@FERC.fed.us.

Finally, the complete text on diskette in WordPerfect format may be purchased from the Commission's copy contractor, La Dorn System Corporation. La Dorn Systems Corporation is located in the Public Reference Room at 888 First Street, N.E., Washington, D.C. 20426.

Table of Contents

I. *Background*
II. *Discussion*
A. *Overview*
B. *Masking of Source and Sink Related Information*
1. *Business Sensitivity and Competitive Effect*
2. *Other Information Sources and the Need for Source and Sink Information*
3. *Differing Impacts on Contract Path and Flow-Based Transmission Pricing Regimes*
C. *Proposed Interim Procedures to Achieve On-Line Price Negotiation and Disclosure of Discounts in Phase I OASIS until Phase IA Changes Are Implemented*
D. *How Group Proposals to Revise the S&CP Document*
1. *Comments on Preconfirmed Reservations*
2. *Comments on Linking Ancillary and Transmission Services*
3. *Comments on Capacity Profiles*
4. *Comments on Posting of Losses*
5. *Revisions to Phase IA S&CP Document Recommended by the How Group and the Commercial Practices Group*
E. *Other Proposed Revisions to the S&CP Document*
1. *Comments on Standardized Naming of Transmission Paths*
2. *Comments on Reservation Templates*
3. *Comments on Dynamic Notification of Secondary Providers*
4. *Comments on Reservation Time Limits*
F. *Data Elements in the Templates Are to be Fixed in Sequence and Number, and Are Not to Differ Among OASIS Nodes*
G. *The Meaning of Disclosure of a ''Discount Given to Particular Customer''*
H. *Date of Implementation for Phase IA Changes*
I. *Impact of Phase IA Implementation*
J. *Uniform Formats for Organizational Charts and Job Descriptions*
III. *Effective Date and Congressional Notification*
Attachment 1—*ABBREVIATIONS OF NAMES USED IN ORDER*
Attachment 2—*Revised ''STANDARDS AND COMMUNICATION PROTOCOLS FOR OPEN ACCESS SAME-TIME INFORMATION SYSTEM (OASIS) Phase IA'' (clean version)*
Attachment 3—*Revised ''STANDARDS AND COMMUNICATION PROTOCOLS FOR OPEN ACCESS SAME-TIME INFORMATION SYSTEM (OASIS) Phase IA'' (with revisions to OASIS How Group's most recent submittal highlighted)*

Before Commissioners: James J. Hoecker, Chairman; Vicky A. Bailey, William L. Massey, Linda Breathitt, and Curt Hébert, Jr.

Order on OASIS-Related Issues

I. Background

The Commission has determined that open access non-discriminatory transmission service requires that information about the transmission system must be made available to all transmission users at the same time by way of the Open Access Same-Time Information System (OASIS).[1] The

[1] Open Access Same-Time Information System and Standards of Conduct, Order No. 889, FERC Stats. & Regs. ¶ 31,035, 61 FR 21,737 (1996); *order granting request for clarification*, 77 FERC ¶ 61,335 (1996); *order on reh'g*, Order No. 889–A, FERC Stats. & Regs. ¶ 31,049, 62 FR 12484 (1997); and order denying reh'g, Order No. 889–B, 81 FERC ¶ 61,253, 62 FR 64715 (1997).

See also Promoting Wholesale Competition Through Open Access Non-Discriminatory Transmission Services by Public Utilities; Recovery of Stranded Costs by Public Utilities and Transmitting Utilities, Order No. 888, FERC Stats. & Regs. ¶ 31,036, 61 FR 21540 (1996); *order on*

current Phase I OASIS is an Internet-based electronic communication and reservation system through which transmission providers[2] furnish potential transmission customers with information pertaining to the availability and price of transmission and ancillary services and potential customers may select and procure those services in the form of service reservations.[3] To ensure that individual OASIS nodes present information in a consistent and uniform manner, the Commission has relied upon the industry to develop standards and protocols for the Commission's review and approval that specify, among other things, OASIS templates defining the information that must be presented to customers interested in procuring transmission-related services, both in the interactive form of graphical displays or screens, and in the form of downloadable files. To this end, EPRI and NERC have jointly facilitated the ongoing activities of the OASIS ''How'' Working Group (How Group)[4] to develop suitable OASIS standards and communications protocols.[5] In this order, we address several OASIS matters raised in connection with our directives in Order No. 889–A, various submittals from the How Group, and comments from interested persons.[6]

In Order No. 889–A, we determined that any ''negotiation'' between a transmission provider and a potential transmission customer over price discounts should take place on the OASIS, visible to all market participants. We also ordered some minor revisions to the OASIS regulations,[7] and requested that the How Group recommend certain changes to the S&CP Document consistent with the determinations we made in Order No. 888–A.[8] We made a request to the How Group to propose any conforming changes that might be necessary to the S&CP Document by June 2, 1997, and to inform the Commission of the earliest date by which the industry could meet our transmission service negotiation and price discount disclosure requirements during Phase I.

On June 27, 1997, the How Group proposed interim measures to allow on-line transmission service negotiation and posting of price discounts on currently configured Phase I OASIS nodes pending development of a more satisfactory method.

The How Group also sought clarification of the Commission's stated intention regarding source and sink[9] disclosure in Order No. 889–A. In that order, we deleted from the OASIS regulations provisions permitting transmission customers to request that transmission providers posting transmission and ancillary service requests and responses under § 37.6(e) temporarily mask the identities of the parties to the transaction during and after negotiations for transmission service.[10] The How Group asked if this meant that the source and sink information routinely provided by potential transmission customers and reported on OASIS transmission service request templates was also to be divulged. In addition, the How Group requested clarification as to whether a transmission price ''discount'' as used in Order No. 889–A refers to any price below the ceiling price.

On July 15, 1997, we issued a notice concerning the How Group's June 27 filing and invited public comment on the request for clarification of the Commission's masking requirements, the proposed interim measures for on-line transmission service negotiations, and the posting of transmission price discounts. The 13 comments we received are referred to herein as ''Comments on How Group's June 27 letter''.[11]

On August 12, 1997, the How Group submitted an updated revised S&CP Document (Phase IA S&CP Document) to fully implement our transmission price discount negotiation policy and the minor revisions enumerated in Order No. 889–A.[12] In addition to replacing the How Group's interim measures with more comprehensive procedures, the Phase IA S&CP Document incorporates several proposals prompted by the industry's experience in doing business using OASIS. The How Group proposes implementation six months after approval by the Commission, in order to allow four months for standards and protocol development and beta testing and two months for training and full scale testing.

On August 29, 1997, we issued a notice inviting public comment on the August 12 submittal. Four comments

reh'g, Order No. 888–A, FERC Stats. & Regs. ¶ 31,048, 62 FR 12274, 62 FR 64688 (1997); *order on reh'g*, Order No. 888–B, 81 FERC ¶ 61,248 (1997); and *order on reh'g*, Order No. 888–C, 82 FERC ¶ 61,046 (1998).

[2] The term ''Transmission Provider'' is defined at § 37.3(a) of the Commission's OASIS regulations, 18 CFR Part 37 (1997), as:

''any public utility that owns, operates, or controls facilities used for the transmission of electric energy in interstate commerce.''

[3] Early work on OASIS development has focused on facilitating the more frequently sought short term point-to-point transmission related services. Phase I of OASIS development has involved the establishment of basic OASIS sites (nodes) by each transmission provider, by January 3, 1997, with ongoing refinements that permit potential transmission customers to reserve transmission capacity and related services. OASIS Phase II contemplates fully functional OASIS nodes that additionally will allow on-line scheduling of transmission service and of the energy associated with transmission service that now must be accomplished off-OASIS by facsimile or telephone.

[4] A list of the abbreviations of names used in this order is provided in Attachment 1.

[5] Section 37.5(b)(2) of the OASIS regulations, 18 CFR 37.5(b)(2) (1997), requires that each transmission provider operate its OASIS node in compliance with the standardized procedures specified in the OASIS Standards and Communications Protocols document (referred to herein as the S&CP Document).

[6] In Order No. 889–A, we directed a number of changes to OASIS that are listed at note 64, *infra*. The submittals from the How Group included responses to the directives in Order No. 889–A, as well as requests for clarification and suggestions for additional changes to the S&CP Document based on business experience under OASIS.

[7] The minor revisions involved corrections of examples, typographical errors, out-of-date cross references, and similar changes.

[8] Consistent with this finding, we made a request to the How Group to make recommendations on eliminating any references in the S&CP Document (Version 1.1) pertaining to masking the identities of parties to the transmission transaction (*e.g.*, at § 4.3.7.b). We also made a request to the How Group to make recommendations on revising the templates used for the posted transmission service offerings (at § 4.3.2), the status of transmission service requests (at § 4.3.7), and the status of ancillary service requests (at § 4.3.9) to include: (1) the transmission provider's transmission and ancillary services maximum (ceiling) rates; (2) the transmission provider's offering price; (3) the price requested by the customer; and (4) the details of the negotiated transaction. *See* Order No. 889–A, FERC Stats. & Regs. ¶ 31,049 at 30,568.

[9] As we explain further below, depending on the requirements of the transmission provider, source and sink information, specifying the location of the generator(s) and the location of the ultimate load, may either refer to control areas in which the generation or load are located, or to specific generator or load busses.

[10] The relevant and now deleted OASIS regulations, at §§ 37.6(e)(1)(iii) and 37.6(e)(3)(i), respectively, read:

''The identify of the parties will be masked—if requested—during the negotiating period and for 30 days from the date when the request was accepted, denied or withdrawn.

When any transaction is curtailed or interrupted, the curtailment or interruption must be posted (with the identities of the parties masked as required in § 37.6(e)(1)(iii)) and must state the reason why the transaction could not be continued or completed. ''

[11] Comments on the June 27, 1997 letter were filed by APPA, CILCO, CCEM, Commonwealth Edison, CPEX, Electric Clearinghouse (jointly with PECO Energy), EPSA, Florida Power Corp, NRECA, NYSEG, PJM, and Southern (on behalf of Alabama Power, Georgia Power, Gulf Power, Mississippi Power, and Savannah). The How Group also filed comments, on September 22, 1997, which included proposed revisions to the S&CP Document to accommodate its proposed interim procedures for on-line transmission service negotiations and the posting of transmission price discounts.

[12] The How Group submitted a preliminary draft version of this proposal on July 9, 1997. Further additions, clarifications and corrections to the August 12, 1997 filing, were submitted on September 23, 1997.

were filed and are referred to herein as ''Comments on Phase IA''.[13]

II. Discussion

A. Overview

In this order, we: (1) conclude that the source and sink information reported on OASIS transmission service request templates should be unmasked at the time when a transmission provider updates the transmission reservation posting to show the customer's confirmation that it wishes to finalize the transaction; (2) require modifications to the operative language in the existing S&CP Document (Version 1.1) to incorporate our findings on unmasking source and sink information (to become effective on January 1, 1999) and on proposed interim measures (to become effective 60 days from the date of publication of this order in the **Federal Register**; and (3) adopt, with the revisions discussed below, the Phase IA S&CP Document (as corrected by the How Group in its September 23, 1997 submittal), as Version 1.2, to become effective on December 1, 1998. For clarity, we address the issues raised by the various How Group submittals and related public comments on an issue-by-issue basis.

B. Masking of Source and Sink Related Information

The Commission has been asked to decide whether certain information routinely provided by potential transmission customers, which pertains to the location of the generator(s) (source) and the location of the ultimate load (sink) [collectively, source and sink information] should be made publicly available (by a posting on the OASIS) or should be kept confidential (and made available only to transmission system operators). This information, which helps define the transmission service being requested,[14] is submitted to the transmission provider by the potential transmission customer when it completes the TRANSREQUEST template as part of its initial request for transmission service.

Under the current S&CP Document, the source and sink information becomes an element of the transmission provider's response to the potential transmission customer's query on the status of its pending service request.[15] However, since such information might be used to infer the identifies of the power supplier and the power purchaser associated with a pending transmission service request, historically this element of the response has been masked. In connection with the masking of certain other information, in Order No. 889–A, we decided to delete the temporary masking option provisions in our OASIS regulations (formerly found in § 37.6(e)(1)(iii) and § 37.6(e)(3)(i), *see supra* note 10) applicable to the identities of the parties to the transmission transaction (*i.e.*, the transmission provider and the potential transmission customer), since our price discount policy calls for the identities of the parties negotiating the discount to be made public during the negotiation period.[16] Accordingly, we asked the How Group to eliminate any references in the S&CP Document to the masking of the identities of transaction parties.[17] We reaffirmed this decision in Order No. 889–B.[18]

In its June 27, 1997, submittal, the How Group asks us to clarify whether Order No. 889–A intended to require the unmasking of the source and sink information posted on the TRANSSTATUS and other templates covered by § 4.3.5b of the S&CP Document. Although the How Group prepared and provided a summary of the positions of transmission providers and transmission customers on this issue,[19] we invited further public comments on the matter.[20]

Comments

1. Business Sensitivity and Competitive Effect. It is not clear that all commenters mean the same thing by source and sink. Some appear to refer to the exact location of the generation and load, while others appear to refer to the control area, which may cover a much broader geographic area. With regard to the impact that unmasking of source and sink information may have on competition, Commonwealth Edison, CCEM, EPSA, and PECO Energy predict that unmasking will result in the elimination of the role that power marketers play in electricity markets in matching the needs of power suppliers

[13] Comments on the How Group's Phase IA submittal were filed by AEP, How Group/Commercial Practices Group, PECO, and Southern. The How Group/Commercial Practices Group comments included the September 23, 1997 revision of the Phase IA S&CP Document incorporating clarifications and minor corrections.

In addition, on April 3, April 9, April 10, and April 27, 1998, the How Group submitted a series of corrections and revisions to its OASIS Phase IA submittal incorporating various clarifications and minor corrections to the S&CP Document. Each successive submittal superseded all pending earlier submittals. We issued a notice of the April 10, 1998 submittal and not of those earlier submittals that it superseded (the April 27 corrections were submitted as comments on the April 10, 1998 submittal). We expected to act on the latest corrections of the How Group in this order. However, with so many revisions, we are uncertain that all errors have been identified. We therefore invite the How Group to file with the Commission a revised Phase IA submittal, within 21 days of the date of issuance of this order, in WordPerfect 6.1 format, that to the greatest extent possible identifies all needed corrections to the S&CP Document. We request that the transmittal letter for this submittal provide a complete explanation of all revisions and why they are being proposed. We also request that the submittal contain both a clean version and a redline/strikeout version showing changes between that version and the one being issued in this order. We will issue a public notice when we these documents are filed and will take action on the How Group's recommendations shortly thereafter.

[14] Source and sink information for point-to-point transmission service describes the location of the generators and the ultimate load in an electric system sense, and does not necessarily identify sellers and buyers by name. In accordance with the convention of the transmission provider under its individual Open Access Tariff (the Pro Forma Tariff allowed each transmission provider to determine this for itself in its Open Access Tariff filing) this source and sink information may routinely include only the identities of the respective control areas (*e.g.*, in the case of point-to-point transmission across a transmission provider's system, the point of receipt is identified as a control area and the point of delivery is similarly identified), or it may include the identities of the respective bus bars of the particular generators and loads (*e.g.*, in the case of transmission within, out of or into a transmission provider's transmission system). *See*, the Data Element Dictionary, accompanying the S&CP Document that, for template purposes, defines ''source'' as ''[t]he area in which the SOURCE is located'' and ''sink'' as ''[t]he area in which the SINK is located.''

The source and sink information here at issue is the source and sink information reported on OASIS templates. We are not addressing, and not requiring the disclosure of, information collected from customers as part of a complete application for transmission service under the Pro Forma Tariff, including information on whether the requested transmission service is feasible (*e.g.*, the NERC ''tagging'' information that might accompany the scheduling of transmission service). *See* Coalition Against Private Tariffs, and Western Resources, Inc., 83 FERC ¶ 61,015 (1998), *reh'g pending* (*CAPT*). *CAPT* is further discussed *infra* at notes 47, 74, and 76.

[15] *See also* ''service request'' transaction templates at § 4.3.5 of the S&CP Document.

[16] Order No. 889–A, FERC Stats. & Regs. at 30,569–70.

[17] *Id.* The How Group made this deletion in its August 12, 1997, Phase IA filing.

[18] Order No. 889–B, 81 FERC at 62,175.

[19] In its June 27, 1997 letter, the How Group summarized the positions of interest groups as follows:

- Transmission Providers generally do not have a preference on this issue, although it is technically easier for them if there is no masking on OASIS at all.
- Transmission customers involved in merchant activities strongly support having source and sink identity masked from competitors indefinitely or for as long as possible because they consider this information to be business sensitive.

[20] The Commission invited comments on: (1) why some parties consider this information to be business sensitive or confidential while others do not; (2) whether public access to this information might harm competition and reduce efficiency, and if so, why; (3) whether, in the event that source and sink information continues to be masked, competitors will be able to accurately infer this information from other sources; and (4) the implications of unmasking for contract path and flow-based pricing regimes for reserving transmission capability.

to sell their generation output with the needs of power purchasers to meet their loads.[21] They posit that once the location of the generating facility (source) and the location of the load ultimately served (sink) for each point-to-point transmission service transaction is made publicly available, such information will be used by each party (*i.e.*, the power supplier and the power purchaser) to match up their respective needs and deal directly with each other, if possible, to their mutual advantage and to avoid the power marketer's mark-up.

Florida Power Corp believes that unmasking source and sink information will eliminate some opportunities for marketers, if this information is made publicly available when transmission services are reserved, because power suppliers and power purchasers will then have time to negotiate directly.[22]

APPA points to the technical burden that masking efforts place on transmission providers.[23] It further argues that the bypass of power marketers that might be caused by unmasking is actually an efficient outcome, if all that unmasking adds to the overall transaction is the possibility of direct matching of the power supplier and the power purchaser. APPA asserts that those entities warning that the unmasking of source and sink information will cause harm to power marketers are really confusing a threat of private harm with societal harm. In its view, making source and sink information publicly available would serve the interests of ultimate customers.[24]

PJM sees no reason to mask source and sink information. It believes that providing this information to all market participants will increase both competition and the overall efficiency of the market.[25] NYSEG shares the view that electricity markets may become more efficient with more transmission information made available on a non-discriminatory basis.[26]

Southern suggests that the Commission should not unmask source and sink information unless it has a strong policy reason to do so.[27] Both EPSA and PECO Energy acknowledge the apparent benefit of unmasking source and sink information, but contend that such benefits will not be realized in practice, especially at this early stage when competitive electricity markets are still evolving.[28] They also argue that unmasking source and sink information would result in the loss of significant benefits they claim power marketers now bring to electricity markets, including liquidity, risk management, and creativity in meeting the unique needs of power suppliers and power purchasers.[29] EPSA foresees the competitiveness of electricity markets being undermined by unmasking, with markets eventually returning to monopoly power suppliers and captive power purchasers.[30] CPEX also sees unmasking as a serious threat to competitive electricity markets.[31]

CCEM makes the commercial business argument that unmasking will compel power marketers to give up the benefits that they provide without being compensated.[32] It further argues that the threat of after-the-fact audits should be sufficient to discourage instances of undue discrimination in the provision of transmission services and that unmasking is unnecessary for this purpose.

With regard to more improved utilization of transmission systems, NYSEG asserts that unmasking will allow all transmission users to gauge what impact a given transmission service transaction will have on the transmission provider's system.[33] NRECA suggests unmasking will provide transmission users with a better idea of the planned and scheduled uses of the transmission system and what additional transmission capacity is available. While it supports making source and sink information available at the time when transmission providers and potential transmission customers finalize reservations and energy schedules, NRECA opposes unmasking during the period when transmission reservation requests and the associated off-OASIS energy schedule requests are still pending.[34] Commonwealth Edison sees any enhancement of transmission system capacity analysis by transmission customers resulting from the disclosure of source and sink information, as being only theoretical. It asserts that postings of ''available transmission capacity'' (ATC) provide sufficient information for customers to analyze the impacts that various transmission transactions may have on the transmission system and its users.[35]

2. Other Information Sources and the Need for Source and Sink Information. With regard to whether similar information might be available elsewhere, which would allow the identity of the power supplier and the power purchaser associated with a given transmission transaction to be inferred even if masking is continued, Commonwealth Edison and Florida Power Corp opine that it would be extremely difficult to bypass power marketers by obtaining similar information from other sources.[36] NRECA contends that source and sink information will be available from the NERC transaction information system or the tagging form.[37] PECO Energy and Commonwealth Edison believe that unmasking should not be viewed as a reliability matter.[38]

Some commenters question the underlying need for source and sink information, even if it is not made publicly available. CPEX asserts that requiring source and sink information is an unnecessary burden on merchants and that the only information that system operators need to assure transmission reliability is information on power being sent and received through their control areas.[39] In CPEX's view, this is sufficiently covered by ATC without need for specific information on the source and the sink. CPEX further claims that transmission curtailment is only infrequently needed and, when it is, it is implemented by shifting among alternative generation sources without reliance on source and sink information. APPA, however,

[21] EPSA Comments on How Group's June 27 letter at p. 4; PECO Energy Comments on How Group's June 27 letter at p. 4; Commonwealth Edison Comments on How Group's June 27 letter at p. 2; and CCEM Comments on How Group's June 27 letter at p. 7.

[22] Florida Power Corp Comments on How Group's June 27 letter at pp. 1–2.

[23] APPA Comments on How Group's June 27 letter at p. 1.

[24] APPA Comments on How Group's June 27 letter at p. 3.

[25] PJM Comments on How Group's June 27 letter at p. 1.

[26] NYSEG Comments on How Group's June 27 letter at p. 2.

[27] Southern Comments on How Group's June 27 letter at p. 4.

[28] EPSA Comments on How Group's June 27 letter at p. 4 and PECO Energy Comments on How Group's June 27 letter at p. 3.

[29] EPSA Comments on How Group's June 27 letter at p. 4 and PECO Energy Comments on How Group's June 27 letter at p. 4.

[30] EPSA Comments on How Group's June 27 letter at p. 4.

[31] CPEX Comments on How Group's June 27 letter at pp. 3–4.

[32] CCEM Comments on How Group's June 27 letter at p. 4.

[33] NYSEG Comments on How Group's June 27 letter at p. 1.

[34] NRECA Comments on How Group's June 27 letter at pp. 1–2.

[35] Commonwealth Edison Comments on How Group's June 27 letter at p. 2.

[36] Commonwealth Edison Comments on How Group's June 27 letter at p. 3 and Florida Power Corp Comments on How Group's June 27 letter at p. 3.

[37] NRECA Comments on How Group's June 27 letter at pp. 1–2.

[38] PECO Energy Comments on How Group's June 27 letter at p. 2 and Commonwealth Edison Comments on How Group's June 27 letter at p. 4.

[39] CPEX Comments on How Group's June 27 letter at pp. 1–3.

complains that NERC has a policy of treating tagging information as confidential.[40] Finally, EPSA contends that the adverse competitive impacts of unmasking outweigh the limited benefits of source and sink information being collected, since the information is of only marginal relevance in the rare situation when there is a transmission constraint.[41]

3. Differing Impacts on Contract Path and Flow-Based Transmission Pricing Regimes. With regard to whether unmasking source and sink information affects either a contract path or flow-based transmission capacity pricing regime,[42] PJM sees unmasking making no difference.[43] Florida Power Corp notes that the method of calculating ATC for transmission service reservation purposes for either pricing regime is the same and, for this reason, asserts that neither pricing regime influences the decision of whether this information should be unmasked.[44] Finally, APPA asserts that source and sink information is essential under both transmission reservation pricing regimes for determining the potential impact of a request and all parties should have equal and full knowledge of this information.[45]

Commission Conclusion

Initially, we note that this proceeding does not concern whether the transmission provider should collect source and sink information from a potential customer seeking point-to-point transmission service. Point of receipt and point of delivery information is necessary for the transmission provider and we are not entertaining comments directed at challenging the necessity to collect this type of information in this proceeding. Nor does this proceeding concern questions regarding NERC tagging information.[46]

The issue here is whether to unmask, that is, make known to all parties, point-to-point transmission service source and sink information now made known to transmission system operators. We are persuaded that such source and sink information[47] should be disclosed publicly through an OASIS posting at the time when the transmission provider updates the OASIS posting to show that a customer has confirmed its request for point-to-point transmission service. As we explain below, we believe that disclosure of this information will foster greater public confidence in the integrity of OASIS systems and improve the ability of such systems to facilitate open access use of transmission systems comparable to that enjoyed by the transmission providers. We also believe that unmasking can be accomplished without compromising the role that power marketers play in electricity markets.

First, the disclosure of source and sink information will provide wholesale transmission customers and others with useful data for the after-the-fact evaluation of the accuracy of transmission providers' OASIS postings of ATC and total transmission capacity (TTC). Second, disclosure will also provide useful information for discerning any patterns of undue discrimination in the rendering of or refusals to provide transmission services and in price discounting by transmission providers. Thus, disclosure should encourage accurate postings and fair treatment leading to better competitive utilization of transmission systems.

While we acknowledge the potential business sensitivity that power marketers attach to source and sink information, we believe that delaying unmasking until the transmission provider updates the transmission reservation posting to show the customer's confirmation should allow the power marketer to finalize its arrangements with the power purchaser and the power seller. Moreover, delaying disclosure will not result in the public at large losing the benefits that disclosure offers to all transmission users, including power marketers, since assessments of the accuracy of posted information and unduly discriminatory activity based on such information will of necessity be conducted on an after-the-fact basis. We caution that our overriding concerns are with the promotion of the overall competitiveness of the electricity markets and with ensuring openness, confidence, and nondiscrimination in the use of interstate transmission facilities.[48]

We thus require that transmission providers unmask the source and sink information that is posted on TRANSSTATUS and other templates at the time when a request status posting is updated by the transmission provider to show that the customer has confirmed, in response to the transmission provider's acceptance of its offer, that it still wants to complete the transaction and purchase transmission service. Accordingly, we order corresponding revisions to be made to the masking requirements of the S&CP Document.[49] However, in recognition of the concerns expressed in this proceeding regarding the potential business sensitivity of source and sink information and the somewhat limited experience the Commission has had with the OASIS, we determine it is appropriate to delay the implementation of these revisions for seven months. This will permit competitive electric markets additional time to develop. Therefore, these revisions are to become effective on January 1, 1999.

Our decision to unmask source and sink information is consistent with

[40] APPA Comments on How Group's June 27 letter at p. 4.

[41] EPSA Comments on How Group's June 27 letter at pp. 5–6.

[42] Flow-based pricing, unlike contract path pricing, may recognize all of the paths that a given transmission transaction utilizes. *See* Order No. 888, FERC Stats. & Regs. at 31,650 n.95.

''[I]n contrast to contract path pricing, flow-based pricing establishes a price based on the costs of the various parallel paths actually used when the power flows. Because flow-based pricing can account for all parallel paths used by the transaction, all transmission owners with facilities on any of the parallel paths could be compensated for the transaction.''

[43] PJM Comments on How Group's June 27 letter at pp. 1–2.

[44] Florida Power Corp Comments on How Group's June 27 letter at pp. 3–4.

[45] APPA Comments on How Group's June 27 letter at p. 5.

[46] The Commission, elsewhere, has previously addressed NERC's tagging requirements. *See, CAPT supra* note 15.

[47] We earlier defined the source and sink information here at issue, *supra* notes 9 and 14.

[48] Our decision to require that certain potentially sensitive business information be disclosed is consistent with judicial directives to focus on the needs of the overall market, instead of on individual competitors within the market. In *Alabama Power Company* v. *Federal Power Commission*, 511 F.2d 383, 390–391, D.C. Cir. (1974), we had refused to amend our rule that required affected utilities to publicly disclose their monthly Form No. 423 reports of fuel purchases. The court considered various arguments to the effect that, on the one hand, ''disclosure of information would lead to bargaining disadvantages in future fuel contract negotiations'' (511 F.2d at 390), and on the other hand, any bargaining disadvantage as a result of disclosure would merely reflect the removal of information imperfections in an otherwise competitive market thereby facilitating efficient allocation of resources. [*Id.*]

Notably, the court found that,

''a sudden improvement in the availability of information may deprive a buyer of an advantage he enjoyed when, under more imperfect dissemination, he exploited a seller's ignorance of the market price. * * * Generally, however, laws and practices to safeguard competition assume that its prime benefits do not depend on secrecy of agreements reached in the market. [*Id.* at 391, n.13.]''

[49] We are revising the operative statement in § 4.3.7.2 of the S&CP Document (Version 1.1) that reads ''[o]ther fields, such as SOURCE and SINK, may be masked to comply with FERC regulations and Primary Provider tariff'' to read as follows:

''Transmission Providers shall make source and sink information available at the time the request status posting is updated to show that a transmission request is confirmed.''

sections 17.2 and 18.2 of the Pro Forma Tariff.[50] These sections provide that a transmission provider, unless otherwise ordered to do so, is obligated to treat confidentially information that is supplied as part of a Completed Application for transmission service pertaining to the location of the generator and the location of load ultimately served. We herein find that the obligation in the Pro Forma Tariff to treat such information confidentially does not contradict the requirement we are establishing in this order to unmask the source and sink information reported on the TRANSSTATUS and other S&CP Document templates at the time when the transmission provider posts on the OASIS that the customer confirms that it wants to complete the transaction. As noted above, *supra* note 50, the Pro Forma Tariff provides that transmission providers are to keep certain information on source and sink confidential at the request of a transmission customer, except in specified circumstances, which include a regulatory order requiring disclosure. In this regulatory order, we make just such an exception. Accordingly, the requirement in this order to disclose certain source and sink information is consistent with the requirements of the Pro Forma Tariff.

C. Proposed Interim Procedures To Achieve On-line Price Negotiation and Disclosure of Discounts in Phase I OASIS Until Phase IA Changes Are Implemented

The How Group's proposed interim procedures contain two separate components. Under the first, transmission service negotiations would be accomplished by allowing a potential transmission customer to make a bid by modifying the offered transmission price in the price field of the TRANSREQUEST template.[51] The transmission provider would then respond to the bid price by using the TRANSSTATUS template to notify the potential customer of whether the bid was accepted or rejected. This modification of the price field would require only a minor change to most OASIS nodes.

The second proposed interim procedure would create a new category (''discounts'') in the MESSAGE template to announce agreed-upon transmission service price discounts. A price discount for a non-standard transmission related service, such as weekly service beginning on a Wednesday at 2:00 p.m., would be reported only in the MESSAGE template.

The How Group requested that the industry be given two months to test these interim modifications to OASIS templates and implement the interim measures. While maintaining that its interim procedures are a somewhat cumbersome method to implement on-line transmission service negotiations, the How Group contends that the interim measures will allow negotiations to proceed on the OASIS while a more satisfactory method is developed.

Comments

CCEM contends that on-line negotiation of transmission prices is not feasible at this time because the Internet-based OASIS cannot currently accommodate the speed at which negotiation should comfortably take place. It argues that the interim on-line negotiation process will be so cumbersome that transmission providers will lose interest in price discounting.[52] CCEM also sees the disclosure of transmission price discounts raising business sensitivity concerns and suggests that real time discount price disclosure is not the only means available to prevent unduly discriminatory treatment of transmission customers. As an alternative, CCEM suggests that transmission service negotiations proceed off-OASIS through a process that would rely on phone or facsimile communication arrangements between transmission providers and potential transmission customers.[53] Under CCEM's proposal, whenever a transmission price discount is agreed upon, the availability of the price discount would be broadcast and disseminated on-line over OASIS (within 12 hours in the case of an affiliated customer and within 15 days in the case of a non-affiliated customer).[54]

Commonwealth Edison argues that transmission service negotiations off-OASIS should continue, based on concerns about whether price negotiations could be conducted successfully through present OASIS nodes under the interim measures, given the many steps, the amount of time involved, and the OASIS capacity needed to handle the increased volume of the related communications.[55]

While supporting electronic negotiation of transmission prices, and noting that the NYPP OASIS node could implement the interim measures now, NYSEG also prefers to wait until a real-time or faster Internet-based OASIS system is developed. NYSEG suggests that, during the interim, transmission negotiations rely on recorded telephone calls with any agreed-upon price discounts posted on the OASIS within thirty minutes of the completion of the negotiations.

PJM notes that no changes will be required to the PJM OASIS to implement the How Group's interim measures. Southern, however, cautions that OASIS systems are still in the early stages of development and that requiring the capability for on-line negotiation of transmission price discounts, at this critical stage, would add further complexity to the design of OASIS nodes that could slow down the transmission reservation process and actually could impede the growth of more robust power trading.[56]

Florida Power Corp agrees that the proposed interim measures could be implemented through modification of existing OASIS templates, but stresses that price negotiations will be very cumbersome and not practical, especially for short-term transactions. It suggests that negotiations be conducted by telephone calls, with the results immediately posted on OASIS.[57]

[50] Section 17.2(iv) of the Pro Forma Tariff (Stats. & Regs., Regulations Preambles at 30,522) reads:

''The location of the generating facility(ies) supplying the capacity and energy and the location of the load ultimately served by the capacity and energy transmitted. The Transmission Provider will treat this information as confidential except to the extent that disclosure of this information is required by this Tariff, by regulatory or judicial order, for reliability purposes pursuant to Good Utility Practice or pursuant to RTG transmission information sharing requirements. The Transmission Provider shall treat this information consistent with the standards of conduct contained in Part 37 of the Commission's regulations.

Section 18.2(vii) of the Pro Forma Tariff (Stats. & Regs., Regulations Preambles at 30,524) reads in relevant part:

''The Transmission Provider will treat this information in (vi) and (vii) as confidential at the request of the Transmission Customer except to the extent that disclosure of this information is required by this Tariff, by regulatory or judicial order, for reliability purposes pursuant to Good Utility Practice, or pursuant to RTG transmission information sharing agreements. The Transmission Provider shall treat this information consistent with the standards of conduct contained in Part 37 of the Commission's regulations.''

[51] We noted in Order No. 889–A, FERC Stats. & Regs. at 30,551 and n.12, that ''negotiation'' would be considered to have taken place only if the transmission provider or transmission customer seeks prices below the ceiling prices set forth in the Order No. 888 Pro Forma Tariff.

[52] CCEM Comments on Interim Measures at pp. 11–12.

[53] CCEM Comments on Interim Measures at p. 11.

[54] *Id.*

[55] Commonwealth Edison Comments on Interim Measures at pp. 4–5.

[56] Southern Comments on Interim Measures at p. 2.

[57] Florida Power Corp Comments on Interim Measures at pp. 4–5.

NRECA asserts that the interim measures will work effectively only if transmission providers respond in a timely manner to transmission customer requests for price discounts. However, it is willing to accept the interim measures even though they constitute a retrofit and would have developed differently if considered in the initial OASIS design stage.[58]

PECO Energy argues that transmission negotiations off-OASIS should continue, since the majority of transmission providers may not be able to successfully implement the software changes necessary for on-line negotiation of transmission prices over OASIS. PECO opposes mandatory interim measures for on-line negotiation until OASIS is greatly improved.[59] However, it believes that price discounts should be disclosed when offered to affiliates and non-affiliates alike, following the completion of the negotiations.

Commission Conclusion

As we stated in Order No. 889–A,[60] the objective of the interim procedures is to implement our Order No. 888–A on-line transmission price negotiation policy as soon as possible through OASIS, so we can improve the competitiveness of the electricity markets while the industry develops a more sophisticated ''Phase IA'' approach. Keeping this in mind, we are adopting the first of the How Group's two proposed interim measures (involving modifications to the price field of the TRANSREQUEST template) because it appears that this interim modification can be easily made. We are not adopting the How Group's second proposal (involving a new ''discounts'' flag in the MESSAGE template) because this revision is more complex and we wish to keep the burden of implementing the interim procedures to a minimum.[61] Under this limited interim procedure, wherein we merely allow the price field to be modified,[62] a potential transmission service customer will be able to request discounts via OASIS, but only on posted transmission service offerings. No commenter has provided persuasive evidence that the How Group's proposal cannot be implemented within the How Group's proposed time frame.

Relying on the How Group's interim proposal, we direct changes to the operative language of the current S&CP Document to allow a potential transmission customer to modify the price field when submitting a request to purchase transmission service using the TRANSREQUEST template.[63] If the customer's bid is approved, the provider will respond by posting the message ''accepted'' in the TRANSSTATUS template. If the customer's bid is not accepted, then the provider will respond by posting the message ''denied.''

We require implementation of this directive by September 11, 1998 so that discounts can be requested on-line without waiting for the industry to implement comprehensive changes in Phase IA OASIS.

We believe the benefits of fostering on-line discounting as soon as possible in this limited fashion outweigh the problems that may result from the use of a somewhat cumbersome process and find this preferable to waiting until OASIS Phase IA improvements can be implemented before implementing on-line discounting. As to any business sensitivity concerns over our decision to make price negotiation visible on OASIS, the time to raise these concerns was in the rehearing of Order No. 889–A and not at this compliance stage.

D. How Group Proposals To Revise the Phase IA S&CP Document Requirements

The How Group's proposed longer term revisions incorporated in a Phase IA S&CP Document (Version 1.2) include both the changes we directed in Order No. 889–A and other changes prompted by the industry's experience with operating OASIS sites.[64] Except as discussed below, we find these modifications to the S&CP Document to be acceptable and direct its revision with minor editorial changes to correct typographic errors, enumeration of sections, and other nonsubstantive changes.[65] Additionally, interested persons filed comments on certain of the proposed revisions to the S&CP Document, which we also address below.

1. Comments on Preconfirmed Reservations

In connection with transmission service negotiations, Section 4.2.10.1(a) of the How Group's proposed Phase IA S&CP Document indicates that OASIS shall set OFFER__PRICE equal to BID__PRICE in the case of

[58] NRECA Comments on Interim Measures at p. 3. Although NRECA argues that ''timely'' responses are needed, it seeks no revisions to the timetables for posting in 18 CFR 37.6. This issue is also raised by PECO in their comments to Phase IA.

[59] PECO Energy Comments on Interim Measures at p. 7.

[60] Order No. 889–A, FERC Stats. & Regs. at 30,551.

[61] We note, however, that in section II.G *infra,* we accept the How Group's proposal to add a negotiation flag in the TRANSSTATUS template to enable customers to search for discounts, as part of the Phase IA S&CP Document revisions.

[62] This modification is more fully explained in note 63, *infra.*

[63] In the interim, until the revised S&CP Document Version 1.2 (*see* Attachment 2) becomes effective, we will modify the operative language of S&CP Document Version 1.1, as proposed in the How Group's June 27, 1997 letter with some minor clarifications, through the addition of the following language to § 4.3.7:

''For on-line price negotiation the customer can modify the price field when submitting a request to purchase transmission service using the TRANSREQUEST template. The provider response in the TRANSSTATUS template will either indicate ''accepted'' if the bid is approved, or ''denied'' if the bid is not accepted. The reason for denial would be shown in the comments field. The TRANSSTATUS template would retain the customer's bid price as a permanent record, whether accepted or not. If the request is denied for price reasons, the customer could repeat the process by submitting a new request with a different price bid. If a discount is given on a posted product, it is also required that the transmission provider change the posted offer price to match the discounted price for the service, for all unconstrained paths to the same point of delivery (POD) and for the same time period.''

This insertion would precede ''a. Customer Capacity Purchase Request'' in § 4.3.7 of the S&CP Document. We are making this change through the issuance of this order and not through the issuance of an updated S&CP Document because it is to be in effect for only a limited time.

[64] Changes directed by the Commission include: (1) provision for on-line interactive negotiation (such as the addition of new data elements for price offered, price bid, ceiling price); (2) provision for linking ancillary services to transmission services; (3) provision for identification of a reservation made by an affiliated merchant; (4) provision for posting personnel transfers; (5) provision for posting incidents in which the provider exercises discretion in the application of tariffs; and (6) removal of all references in the S&CP Document to masking.

Improvements suggested by industry's experience include: (1) automatic notification of customers (dynamic notification) when the status of a reservation request has changed (to speed up the process of negotiating by reducing the customer's need to check an OASIS node repeatedly for the status of a pending request); (2) merging all transmission service offering templates into a single template (to simplify doing business); (3) further standardization of transmission service product names and identification of their attributes; (4) introduction of ''sliding windows of time'' allowing purchases of blocks of service (running 60 minutes, 24 hours, 7 days, or 30 days) on a non-calendar period basis; (5) introduction of ''capacity profiles'' reservations (allowing for a single reservation for monthly service to set different levels of reserved capacity for each day thereof); and (6) a new template for nonfirm secondary service over alternate points of receipt and delivery (provides additional support for secondary transmission service).

[65] In Attachment 3 to this order, we show all the changes that we have made and direct to the How Group's September 23, 1997, submittal in redline and strikeout fonts. In Attachment 2, we provide the revised document without redline and strikeout fonts. Attachments 2 and 3 will be posted on the Commission Issuance Posting System (CIPS) and may be reviewed in the Commission's Public Reference Room during normal business hours. Details about accessing CIPS are given in the supplementary information preceding this order, *supra* at ii.

''preconfirmed'' transmission reservation requests. AEP states that this proposal should satisfy the restriction/requirement that BID__PRICE be equal to OFFER__PRICE for any reservation to be CONFIRMED;[66] however, AEP is concerned that parties to a preconfirmed transaction using the proposal may inappropriately modify or unwittingly accept price information. Thus, it requests that we substitute the following requirement:

Prior to or commensurate with a Seller's setting a preconfirmed reservation request's STATUS to ACCEPTED (and by implication CONFIRMED), the Seller must set OFFER__PRICE equal to the value of the BID__PRICE as established by the Customer on submission of the request.

Commission Conclusion

The Commission adopts AEP's suggestion and proposed wording for the Phase IA S&CP Document. It is more specific and thus less subject to differing interpretations. AEP's proposal clarifies that the setting of the OFFER__PRICE equal to the BID__PRICE occurs only when the Seller accepts the preconfirmed request. We remind transmission providers that our OASIS regulations require that, if discounts are offered, they be offered to all transmission customers.[67]

2. Comments on Linking Ancillary and Transmission Services

The How Group proposes adding § 4.2.12 to conform the S&CP Document to the revisions directed by Order No. 889-A in connection with §§ 37.6(c)(4) and 37.6(e)(1)(iv) of the Commission's OASIS regulations, which require that transmission service offerings and transaction status postings identify the associated ancillary services and ancillary service transaction status.

AEP notes that the Commercial Practices Group white paper recommendation on the handling of ancillary services during Phase IA, *i.e.*, that

basic point-to-point transmission service should be requested before any Ancillary Services to support that basic point-to-point transmission service are requested

was not incorporated in the How Group's proposal. AEP requests

that the Commission adopt a provision that, for OASIS Phase IA, all ancillary service transactions/reservations are subordinate to and in support of a single transmission service reservation.

AEP argues that adoption of this provision would significantly simplify the implementation of the How Group's proposal. AEP contends that, if one considers pre-arrangement for Operating Reserve-Spinning Reserve from a third party ancillary service provider, that service provider will require notification that some or all of that service is supporting one or more transmission reservations made at some point in the future as those reservations are confirmed. As currently there is no proposed mechanism to query OASIS for reservations that reference this pre-arranged ancillary service reservation, AEP questions whether the third-party supplier market for ancillary services is robust enough to warrant the significant investment in programming resources needed to implement the How Group's proposal without such modification.[68]

Southern contends that the How Group's proposal to allow transmission customers to indicate a preferred provider of ancillary services and indicate which services will be purchased in the future, injects confusion into the reservation process by giving transmission customers options inconsistent with the Pro Forma Tariff. It also asserts that the proposal is unnecessary because the existing ''request reference'' or ''deal reference'' fields can be used to link ancillary and transmission services as required by the Commission.[69]

Commission Conclusion

We believe that AEP's suggestion to limit the flexibility inherent in the ancillary services linkage proposal reduces the Phase IA programming necessary to implement the proposal and is a practical suggestion. Nonetheless, while we adopt its suggestion that requests for ancillary service be associated with a single transmission service reservation, we find it unnecessary to completely adopt AEP's recommendation for the Commission to require that basic point-to-point transmission service must be requested *before* any request is made for supporting ancillary services. This would interfere with customers attempting to take advantage of certain optional ancillary service packages transmission providers offer with their transmission service offerings. Therefore, ancillary services may be requested before, concurrently with, or subsequent to, the related request for basic point-to-point transmission service.

We also agree with Southern that it is the Pro Forma Tariff, and not the OASIS regulations, that controls the minimum ancillary services that must be offered by a transmission provider. However, the How Group's Phase IA proposal merely attempts to accommodate the reservation options that transmission customers may have under a particular transmission provider's Pro Forma Tariff. To the extent that Southern has a feasible but simpler approach to handle ancillary service linkage, we encourage it to pursue its idea with the How Group to improve § 4.2.12 of the S&CP Document.

3. Comments on Capacity Profiles

The How Group proposes to introduce, in Phase IA, the concept of capacity profiles for reservations of varying amounts of capacity over a given service period. For example, a single OASIS transaction would cover a weekly reservation that incorporates varying daily reservation levels.

Southern asks for rejection of the capacity profile mechanism, claiming that OASIS, as it is currently configured, permits transmission customers to accomplish the same result through the submissions of multiple requests, each tied to the others through a common deal reference number supplied by the transmission customer and that, in any event, the computer systems of transmission providers are not set up for this process. Southern implies that the capacity profile reservation mechanism is also not feasible because the Pro Forma Tariff does not include provisions that allow transmission customers to make reservations based on capacity profiles.[70]

AEP questions whether transmission customers should be able to negotiate the price of the individual hours of a capacity profile. It claims that the S&CP Document has also defined the templates used to negotiate the transmission price of the individual hours of a capacity profile in an inconsistent and ambiguous manner. AEP, therefore, requests that any reference to pricing information for the individual hours of capacity profiles be removed.[71]

Commission Conclusion

The How Group's Phase IA proposal for implementing capacity profiles in § 4.3.7.1 of the S&CP Document leaves the adoption of the capacity profile transaction process to the option of each transmission provider:

[s]upporting ''profiles'' of service, which request different capacities for different time

[66] AEP Comments on Phase IA at p. 5.

[67] *See* Order No. 889–A, FERC Stats. & Regs. at 30,568.

[68] AEP Comments on Phase IA at pp. 5–7.

[69] Southern Comments on Phase IA at pp. 4–5.

[70] Southern Comments on Phase IA at pp. 5–6.

[71] AEP Comments on Phase IA at pp. 7–8.

periods within a single request, are at the discretion of the Primary Provider.[72]

Accordingly, AEP, Southern, and other transmission providers will be free to decide whether to implement the capacity reservation profiles on their individual OASIS nodes within the parameters of the service offering prescribed by their respective Pro Forma Tariffs. The revisions to the S&CP Document which we adopt today merely provide a consistent method to follow by transmission providers in the event they choose to offer capacity reservation profiles.

4. Comments on Posting of Losses

PECO points out that, while transmission customers must account for losses when making a transmission reservation, it can be a very time consuming process for customers to search through the transmission provider's tariff to determine how losses will be applied on systems where losses vary from path to path.[73] PECO proposes either that the transmission provider's response to a request for transmission service via the ''TRANSOFFERING'' template include loss information or, alternatively, that a table of losses be posted on the OASIS by the transmission provider.

Commission Conclusion

PECO raises a valid concern. While we encourage transmission providers to post a table of losses on their OASIS nodes because such information is useful to transmission customers, we will not require it at this time because we believe that transmission users would be best served if loss information were provided in a standardized template. Therefore, we request that the How Group consider this as part of the OASIS Phase II process.

5. Revisions to Phase IA S&CP Document Recommended by the How Group and the Commercial Practices Group

In their joint comments, the How Group/Commercial Practices Group recommend one change, and several clarifications and minor corrections to the proposed Phase IA S&CP Document. The change pertains to the addition of two data elements requiring the establishment of two new fields (NERC__CURTAILMENT__PRIORITY and OTHER__CURTAILMENT__PRIORITY) to several templates (TRANSOFFER, TRANSSTATUS, LIST, TRANSSERV, SCHEDULE, CURTAIL, TRANSSELL, TRANSPOST), to inform transmission customers about the NERC curtailment priority and other regional curtailment priority assigned to each transmission service offering.[74] These priorities are set by the transmission provider, consistent with the tariff on file with the Commission. The minor changes include enumeration, typographical, sequencing, identification, and format corrections and fixes.[75]

Commission Conclusion

We adopt the new data elements as an option that transmission providers may display because they provide useful information. However, we caution that our adoption of a place on the OASIS for these data elements does not constitute an approval of the NERC or other curtailment priorities.[76] We also adopt the proposed corrective suggestions for Phase IA purposes because they improve and help complete the S&CP Document.

E. Other Proposed Revisions to the S&CP Document

1. Comments on Standardized Naming of Transmission Paths

AEP raises the issue of the need for consistent naming of point-to-point transmission paths among transmission providers' systems. It observes that inconsistent naming of paths among transmission providers has had a significantly negative impact on transmission customers' ability to effectively use OASIS to procure needed transmission services. AEP, therefore, proposes its own naming convention for transmission paths:

Where a point of receipt and/or delivery (data elements POINT__OF__RECEIPT and POINT__OF__DELIVERY) represents a NERC Control Area, the NERC 4 character Control Area acronym shall be used as the name of that point of receipt and/or delivery.

Where a path (dat[a] element PATH__NAME) represents the interconnection between two NERC Control Areas, the PATH__NAME shall be composed of: ''REGION__CODE/ PRIMARY__PROVIDER__CODE/ PATH__CODE//''. REGION__CODE and PRIMARY__PROVIDER__CODE are as defined in the Data Element Dictionary. PATH—CODE shall be composed of the POINT__OF__RECEIPT followed by the hyphen (-) character and POINT__OF__DELIVERY, where POINT__OF__RECEIPT and POINT__OF__DELIVERY are the associated NERC 4 character Control Area acronyms. OPTIONAL__CODE and SPARE__CODE are null.[77]

Commission Conclusion

We agree with AEP that a consistent naming convention of paths will greatly improve the usefulness of Phase IA OASIS. However, in this instance, we are reluctant to impose a change in a business practice without giving the industry the opportunity to consider other possibilities and reach a consensus on the best solution. Since the Commercial Practices Group has been formed to develop business practice standards for OASIS, we request that the Commercial Practices Group propose a consistent naming convention for transmission paths by August 31, 1998.

2. Comments on Reservation Templates

AEP notes that the cumbersome process that transmission customers must follow in making arrangements for transmission service on OASIS is made more cumbersome by those transmission providers that require submission of reservation requests to enter and exit their systems for ''passthrough'' or ''wheeling'' type transactions.[78] AEP suggests that a single reservation request should be sufficient to cover both entering and existing the transmission system for such service. AEP asks that we modify the S&CP Document (or the OASIS regulations) to the extent necessary to enable transmission customers to rely on a single reservation transaction for wheeling across a transmission system regardless of whether the particular path is posted.

Commission Conclusion

AEP is correct that our rules currently do not require postings in a manner that a allow a single reservation transaction for wheeling across a transmission system, without a specific advance

[72] August 12, 1997 How Group Letter at p. 48.

[73] PECO Comments on Phase IA at p. 2.

[74] While these data elements would inform customers of the curtailment priorities of NERC and various regional entities, curtailment priorities for transmission providers that are public utilities are governed by the applicable Pro Forma Tariff unless the Commission approves a transmission provider's proposal to revise its Pro Forma Tariff based on a showing that its revised curtailment priorities are consistent with or superior to the Pro Forma Tariff. *See CAPT, supra* note 14. Absent such an approved tariff revision, to the extent that a conflict exists between the curtailment priorities of NERC or another entity and the applicable Pro Forma Tariff, the Pro Forma Tariff shall govern.

[75] How Group/Commercial Practices Group Comments on Phase IA at pp. 1–2.

[76] As we advised in *CAPT supra* note 14:

[t]he Commission further encourages the industry to examine reliability aspects of the Pro Forma Tariff when additional detail may be required to implement specific reservation, scheduling, and curtailment procedures and to propose generic improvements to the Pro Forma Tariff.

Such proposed detail cannot be considered approved by the Commission by virtue of our approving its display on the OASIS.

[77] AEP Comments on Phase IA at p. 2.

[78] AEP Comments on Phase IA at pp. 2–3.

request from a customer that a particular path be posted that way. We are reluctant to direct such a change at this time because it would require a redesign of OASIS. However, the current system has sufficient flexibility to deal with this problem on a case-by-case basis without the need for the Commission to modify its rules. The OASIS regulations at § 37.6(b)(1)(i) currently require that transmission providers post information pertaining to any path requested by a transmission customer, and transmission providers are free to post additional paths of commercial interest.[79] Thus, if a customer intends to do business across a system, it can make a request that the transmission provider post the path as an ''in and out'' path so that a single reservation can cover transmission passing through the transmission provider's system.[80]

We encourage AEP to pursue its idea with the How Group, and to consider, together with the How Group, what system redesign its proposal would necessitate, and whether this would be feasible and cost justified.

3. Comments on Dynamic Notification of Secondary Market Providers

Phase I OASIS nodes do not actively notify a potential transmission customer of information changes such as the current ATC for a given path or the status of a pending service request. The OASIS systems are passive, presenting information that is current only at the time when a particular OASIS node is queried by the customer. To determine if more current information is posted, the customer cannot simply ''stay tuned'' to the site but must continually re-query it. In Order No. 889–A, we noted the passive nature of Phase I OASIS systems and requested that the How Group consider adding more active, dynamic capabilities to OASIS in Phase II.

In its Phase IA submittal, the How Group proposes to add some dynamic capability to facilitate on-line transmission service negotiations prior to Phase II, which we are adopting in this order.[81] It proposes that OASIS nodes automatically notify a customer when the status of a reservation request has changed, from ''pending'' to either ''accepted'' or ''denied.'' This would reduce the number of steps involved in closing a transmission service deal and reduce the incidence of unnecessary polling of OASIS nodes for status checks.[82]

AEP notes that a potential competitive problem exists on OASIS that could be resolved by modifying and extending the How Group's Phase IA dynamic notification proposal. AEP points out that a host transmission provider can gain an advantage by programing its own OASIS computer system to automatically notify it about any customer requests for transmission service while the host's competitors (*e.g.*, resellers of capacity on its transmission system (secondary sellers) and sellers of ancillary services to be used in conjunction with capacity on its transmission system) would be forced to query the host's OASIS node repeatedly to learn of any requests for the types of services they offer.[83]

AEP believes that extending dynamic notification to secondary market providers and ancillary service providers would resolve this competitive problem. It requests that a requirement for such additional dynamic notification be added to the Phase IA S&CP Document.[84]

Commission Conclusion

We agree with AEP that its proposed extension of the dynamic notification proposal would eliminate a potential competitive problem. Therefore, we adopt AEP's modified dynamic notification proposal and accordingly modify § 4.2.8.2—Company Information and § 4.2.10.3—Dynamic Notification, of the S&CP Document to permit secondary market and ancillary services providers who wish to be automatically notified, to identify themselves by merely registering with the transmission provider.[85] However, for purposes of Phase IA, this extension of dynamic notification is required only where the transmission provider has programmed its computer system for its own notification. During Phase II, the OASIS nodes of all transmission providers will be required to have this capability.

4. Comments on Reservation Time Limits

PECO requests the establishment of predetermined deadlines applicable to all OASIS nodes, by which acceptances by transmission providers of transmission service requests and confirmation by transmission customers pertaining to their requests must be made.[86] It contends that predetermined time limits will enable all parties to be aware of pertinent deadlines. On this matter, NRECA similarly points out, as it did for the proposed interim measures, that the proposed Phase IA transmission price discount procedures will work only if transmission providers respond to requests for transmission price discounts in a timely manner.[87]

Commission Conclusion

We note that the Pro Forma Tariff sets the deadlines applicable to transmission providers and we are not in this order modifying those deadlines.[88] Also, in Order No. 889–A, the matter of deadlines applicable to transmission customers was reserved for resolution in Phase II due to our reluctance to specify confirmation time limits without first soliciting the views of representative industry segments. PECO and NRECA, however, make a compelling argument that consistent confirmation deadlines among OASIS nodes are needed before

[79] 18 CFR 37.6(b)(1)(i).

[80] Such an approach requires foresight by the customer (or by the transmission provider). If the customer has not made a request in advance that the path at issue be posted, then it would not be posted in time to accommodate the transaction (unless posted at the request of another customer).

[81] *See* supra note 64.

[82] How Group's August 12, 1997, letter at Attachment 1.

[83] Order No. 889, FERC Stats. & Regs. at 31,621–22, requires transmission providers to post resales of capacity from their transmission systems, on their OASIS nodes. To prevent transmission providers from gaining a competitive advantage over resellers, transmission providers must post such information on the same display page using the same tables used for their own offerings. Transmission providers must also provide postings of offers to sell ancillary services on the same page and in the same format that they use for their own offerings.

[84] AEP Comments on Phase IA at pp. 3–4. Specifically, AEP proposes:

''As an extension of the Company registration information of the host, domain and port identifiers for dynamic notification of changes in the Customer's purchase requests, a field should be added to the Company's registration information that would define/identify how notification would be delivered to that Company should a transmission or ancillary purchase request be directed to that Company as a Seller of a transmission or ancillary service. The pertinent information would be either a full HTTP protocol URL defining the protocol, host name, port, path, resource, etc. information or a ''mailto:'' URL with the appropriate mailbox string. On receipt of any purchase request directed to that Company as SELLER via either the ''transrequest'' or ''ancrequest'' templates, or on submission of any change in request STATUS to that Company as SELLER via either the ''transcust'' or ''anccust'' templates, a notification message formatted as documented for the delivery of notification to the Customer, shall be formatted and directed to the Seller.''

[85] We note that AEP's proposed procedure parallels the registration procedure proposed by the How Group for Phase IA dynamic notification of transmission customers.

[86] PECO notes that the Commission has approved at least one tariff (Wisconsin Electric Power Company, 80 FERC ¶ 61,299 (1997), *reh'g denied* (unpublished order dated November 13, 1997)) that permits the transmission provider to set deadlines by which customers must confirm reservations.

[87] PECO Comments on Phase IA at p. 3.

[88] *See* Order No. 888–A, FERC Stats. & Regs. ¶ 31,048 at 30,523–24. Section 17.4 of the Pro Forma Tariff gives the deadlines for a notice of a deficient application, section 17.5 of the Pro Forma Tariff gives the deadline for a response to a competed application, and section 18.4 of the Pro Forma Tariff gives the deadline for a determination of available capability.

Phase II. In addition, the Commercial Practices Group is now available to review this matter and give us its recommendations on how we should proceed. We, therefore, request that the Commercial Practices Group examine the development of proposed Phase IA deadlines and make recommendations to us on this issue by August 31, 1998.

F. Data Elements in the Templates Are To Be Fixed in Sequence and Number, and Are Not To Differ Among OASIS Nodes

The How Group asks us to reconsider our Order No. 889–A clarification that data elements in OASIS templates must be fixed in sequence and number, and are not to differ from OASIS node to OASIS node. The How Group contends that this does not permit the introduction of new fields to existing templates and it stifles OASIS innovation by transmission providers.

Commission Conclusion

The Commission continues to believe that permitting transmission providers to reorder and add their own information to OASIS templates defeats the purpose of standardizing electronic communication across all OASIS nodes. Standardization of electronic communication across all OASIS nodes is the underlying principle that permits efficient movement of power across the grid by making it easier for customers to locate information in a timely manner across various OASIS nodes. As we have stated before, when the industry proposes modifications to the standards, we will continue to order revisions to the S&CP Document, thus implementing across-the-board changes to the templates for all OASIS nodes, as necessary.[89] Moreover, even though we will continue to be responsive to requests to revise the S&CP Document as warranted, the proper forum for challenging issues first decided in Order No. 889–A (such as this one) would have been in a timely request for rehearing of Order No. 889–A.

G. The Meaning of Disclosure of a Discount Given to a Particular Customer

The How Group asks the Commission to clarify the definition of what constitutes a transmission price ''discount.'' The How Group's June 27, 1997 letter states that it understands the Commission's definition to be any price below the tariff or ceiling price. The August 12, 1997 How Group letter requests clarification that, for the purpose of requiring disclosure of any transmission price discount given to a particular customer, the transmission price discount should be defined as any negotiated price different from the offer price that has been posted on the OASIS. The How Group proposes to identify transmission price discounts in two ways: (1) discounts from the ceiling price and (2) discounts stemming from negotiations regardless of whether the initial offer was the ceiling price. All discounts would be identified by posting the discounted price next to the ceiling price in the offering templates posted by the transmission provider. Negotiated discounts would be identified by a negotiation ''flag'' in the TRANSSTATUS template.[90] The negotiation ''flag'' would enable searches for discounts given to particular customers for specific transmission services, including searches by path, points of receipt and delivery, etc.[91]

Commission Conclusion

We agree with the How Group that, pursuant to our Order No. 888–A policy, a transmission price discount is present whenever a transmission price below the tariff or ceiling price is offered or negotiated by a transmission provider. The proposed use of a negotiation flag, in addition to the ceiling price and offer and bid price in the TRANSSTATUS template, meets our requirement to disclose transmission price discounts, identifying both a negotiated transmission price discount as well as an initial transmission offer price positioned below the ceiling price. We incorporate the How Group's proposal in the revised Phase IA S&CP Document.

H. Date of Implementation for Phase IA Changes

The How Group proposes an implementation date for its proposed Phase IA changes starting six months after approval by the Commission. This schedule would provide four months for development and beta testing and two months for training and full scale testing.

Commission Conclusion

We agree with the How Group that the six-month implementation schedule is reasonable. Accordingly, we will direct that the Phase IA changes must be implemented on December 1, 1998.

I. Impact of Phase IA Implementation

Southern posits that the overall goal of Phase I should be to ensure a reliable core set of transmission service information in a format that is easy to access and simple to use and that Phase IA will represent progress only if it has the effect of making OASIS workable for the majority of market participants.[92] Therefore, the resources of transmission providers and customers should be concentrated on making day-to-day OASIS operations more effective, before adding new features to OASIS.[93] Southern contends that the benefits of Phase IA are not worth the risk of market disruption that is sure to be caused by implementing an interim and substantially new OASIS. Repeating the point it made with respect to the proposed interim measures, Southern argues that Phase IA on-line negotiations may add complexity and will impede rather than accelerate robust trading of power because it will burden OASIS without increasing throughput. It adds that linking ancillary services to transmission services further increases the data entry requirements of the transmission provider and further increases the data that must be transferred between the provider and customer.

Commission Conclusion

As noted, Southern repeats its contention that interim measures for on-line negotiations may add complexity and impede rather than accelerate robust trading of power because it will increase the burden of using OASIS without increasing its throughput. Nonetheless, the policies that led to the changes at issue here were adopted by the Commission in Order No. 889–A after a full review on rehearing of Order No. 889. The proper forum to challenge the Commission's findings in Order No. 889–A would have been in a timely request for rehearing of that order. At this juncture, we are not persuaded to revise our policies concerning on-line negotiations and ancillary services.

J. Uniform Formats for Organizational Charts and Job Descriptions

In *American Electric Power Services Corp.*, 81 FERC ¶ 61,332 at 62,512 (1997), *order on reh'g and clarification*, 82 FERC ¶ 61,131 at 61,470–71 (1998), the Commission required transmission providers to post organizational charts and job descriptions on their OASIS

[89] Order No. 889–A, FERC Stats. & Regs. at 30,574.

[90] The ''flag'' would identify whether the negotiated transmission service price is higher or lower than a transmission provider's offering price. A negotiated price may be higher than the offering price (not to exceed the ceiling price), for example, as the result of an auction on a constrained interface.

[91] How Group Phase II Report at p. 16.

[92] Southern Comments on Phase IA at pp. 1–6.

[93] Southern Comments on Phase IA at p. 2.

nodes. Currently, transmission providers use many different software programs to create and post organizational charts and job descriptions including, but not limited to, Adobe Systems Incorporated's portable document format (''PDF''), Microsoft Corporation's ''Word'', and hypertext marked language (''HTML'').

Because the transmission providers do not provide the organizational charts and/or job descriptions in standardized formats, industry participants have difficulty viewing and downloading the information. To rectify this problem, we encourage the industry to reach consensus on an industry-wide uniform format, which could be easily obtained and widely used by industry participants, to cover both organizational charts and job descriptions, or at a minimum, one uniform format for organizational charts and another uniform format for job descriptions. To this end, we request that the How Group, within 90 days of the date of issuance of this order, develop an industry-wide uniform format for organizational charts and job descriptions, and submit its recommendations on this issue to the Commission.

III. Effective Date and Congressional Notification

Version 1.1 of the S&CP Document, as modified herein, will take effect 60 days from the publication of this order in the **Federal Register**. Version 1.2 of the S&CP Document, as modified herein, will take effect on December 1, 1998. The revisions to § 4.3.7.b of Version 1.2 of the S&CP Document, pertaining to the masking of source and sink information, will take effect on January 1, 1999.

The Commission has determined, with the concurrence of the Administrator of the Office of Information and Regulatory Affairs of the Office of Management and Budget, that this Rule is not a ''major rule'' within the meaning of section 351 of the Small Business Regulatory Enforcement Act of 1996.[94] The Commission will submit the rule to both houses of Congress and the Comptroller General prior to its publication in the **Federal Register**.

The Commission orders:

(A) The current S&CP Document (Version 1.1) is hereby modified, as discussed in the body of this order, to incorporate the interim procedures on price negotiation. This directive is to become effective 60 days from the date of publication of this order in the **Federal Register**. The S&CP Document (Version 1.1), as modified herein, will be superseded by the revised S&CP Document (Version 1.2), as shown on Attachment 2 to this order, upon the effective date of the revised S&CP Document (Version 1.2) ordered below in Ordering Paragraph (B).

(B) The revised S&CP Document (Version 1.2), as shown on Attachment 2 to this order, is hereby adopted for use by Transmission Providers, to become effective on December 1, 1998, as discussed in the body of this order.

(C) The revised S&CP Document (Version 1.2) is hereby modified, as discussed in the body of this order, to revise references in § 4.3.7.b pertaining to the masking of source and sink information, to become effective on January 1, 1999.

By the Commission. Commissioner Bailey dissented in part with a separate statement attached. Commissioner Hébert concurred.

David P. Boergers,

Acting Secretary.

BILLING CODE 6717–01–P

Open Access Same-Time Information System and Standards of Conduct

[Docket No. RM95–9–003]

Issued June 18, 1998.

BAILEY, Commissioner, *dissenting in part*

I respectfully dissent from the decision to require the unmasking of source and sink information and the posting of such information, for public inspection, on a transmission provider's open access same-time information system (OASIS).

In my judgment, this case presents a difficult balancing issue. Specifically, it raises the issue of whether the public divulgence of (what certain commenters characterize as) commercially and competitively sensitive information is out-weighed by the public's and the Commission's need for such information for the purpose of detecting possible undue discrimination or preference in the provision of transmission service.

This issue—the balance between protecting commercially sensitive business information and requiring its disclosure for the purpose of monitoring and enforcement—is a recurring one. I have previously discussed the issue in the context of separation of functions requirements applicable to transmission providers[1] and reporting and filing requirements applicable to power suppliers with market-based rate authority.[2]

I view this issue as particularly important as wholesale power markets initiate and continue their development to competitive markets. From a regulator's perspective, it presents a difficult quandary. Should we require the divulgence of additional information to promote our monitoring of the competitive market, when we suspect or are informed that divulgence of such information would act to hinder operation of the very competitive market we are attempting to foster?

Here, the information at issue is what the order characterizes as ''source and sink'' information. Source and sink information helps to define the transmission service. Specifically, it identifies the location of the generation resource and the location of the load to be served.

This is very important information to the extent it allows the transmission provider to assess the demands a request for transmission service will place on its transmission system. I want to be clear that I have absolutely no problem with the divulgence of source and sink information, and any other related information, to the transmission provider and any other entities, for the purpose of promoting the reliability of the system and implementing appropriate line loading relief procedures.

[94] 5 U.S.C. 804(2).

[1] *See* American Electric Power Service Corporation, *et al.*, 81 FERC ¶ 61,332 (1997), *order on reh'g*, 82 FERC ¶ 61,131 (1998), *reh'g pending.*

[2] *See* AES Huntington Beach, *et al.*, L.L.C., 83 FERC ¶ 61,100 (1998).

The question here, however, is very different—whether such information should be made publicly available, by postings on the OASIS, to the public and to the Commission.

Here, we see different viewpoints on the subject. We are informed that transmission providers are, for the most part, indifferent on the subject and simply want to be apprised of their OASIS posting obligations in the aftermath of Order No. 889–A, which required the on-line posting and negotiation of transmission discounts and the unmasking of party names. (The OASIS ''How'' Working Group, a representative industry coalition that periodically makes recommendations as to proposed improvements in OASIS procedures and protocols, takes no position on the subject and simply seeks Commission ''clarification'' as to whether the unmasking of names also requires the unmasking of source and sink information.)

Transmission customers, on the other hand, offer strong opinion on the subject. Power marketers and power producers articulate strong opposition to the OASIS posting of source and sink information. They believe that this information is commercially and competitively sensitive, and that the public divulgence of the information will stifle the development of competitive markets (particularly markets for short-term energy transactions) and seriously impair their ability to act as market intermediaries identifying and matching sellers and purchasers.

Transmission customers without generation for sale offer a different judgment. They believe that the disclosure of source and sink information, identifying generation and load, will promote transparency of utility operations and better enable customers and the Commission to detect undue discrimination.

Today's order strikes a balance in favor of disclosure. It finds that the information is necessary to better enable customers and the Commission to detect and remedy undue discrimination and preference in the provision of open access transmission service. It also finds that disclosure is helpful in promoting the accuracy of the numbers—available transmission capacity (ACT) and total transmission capacity (TTC)—that transmission providers must post on the OASIS.

The order also helps to protect the commercial and competitive sensitivity of source and sink information by delaying the posting of such information until the time a transmission customer has confirmed that it wishes to finalize the transaction. In this manner, other transmission providers will not be able to swoop in and pirate off pending transactions, through the use of source and sink information, while they are still in the process of negotiation. In addition, the order delays until January 1, 1999 the date by which transmission providers must begin to post on the OASIS the source and sink information provided by transmission customers.

I find this delay in the public posting of source and sink information to be helpful in mitigating the commercial and competitive consequences of disclosure. Nevertheless, even with the delay in posting, I remain of the opinion that the balance tips in favor of protecting commercially and competitively sensitive information against public disclosure. I base this judgment on several considerations.

First, I remain unconvinced whether the unmasking of this information is necessary or represents the best, or even an appropriate, method of improving our ability to detect undue discrimination or promote the validity of OASIS postings. The Electric Power Supply Association, for example, in its comments refers to using source and sink information for enforcement purposes as ''akin to going after a bug with a cannon instead of a fly swatter.'' I wonder whether there are more narrowly-tailored solutions, such as upgrading the data retention or auditing procedures of Order No. 889.

Second, I am struck by the fact that a large segment of the transmission customer community—power marketers and suppliers—which has an obvious interest in promoting competitive markets and utility compliance with our open access and OASIS initiatives actually opposes this initiative. To the extent we act to improve our enforcement mechanisms to the benefit of transmission customers, I would hope to see greater unanimity of support among such purported beneficiaries. In this regard, the commenters which oppose the unmasking of source and sink information are among those attendees at our July, 1997 technical conference on OASIS implementation which expressed great concern for the validity and usefulness of OASIS postings and procedures and urged a number of proposed improvements. However, unmasking of source and sink information was not one of the improvements advanced for our consideration.

Third, as today's order recognizes, the Commission itself recently reaffirmed—as recently as March 1997 in Order No. 888–A—the commercial and competitive sensitivity of source and sink information by providing in the *pro forma* transmission tariff that such information would remain confidential, except in certain limited circumstances. What circumstances have transpired in the last year as to defeat the presumption of confidentiality and to compel a reversal and the disclosure of such information at this time?

Fourth, we have incomplete information upon which to take the significant step of changing our mind and now unmasking information concerning the location of generation and load. The Commission is advancing an order on a variation of that which was set for notice and comment last summer. We have not elicited comments on whether delaying the posting of this information until the time of transaction finalization, or delaying the effectiveness of revisions to the OASIS Standards and Communications Protocols Document for seven months (until January 1, 1999), is sufficient to mitigate the competitive concerns of the commenters. The Coalition for a Competitive Market (CCEM) suggests, as an alternative, that the Commission could balance its concerns by further delaying disclosure of source and sink information for 30 days after a request for service is accepted, denied or withdrawn.

I am basing my decision on the pleadings as compiled in this proceeding. Upon the submission of further comment (such as in petitions for rehearing) as to the balancing of interests between protecting commercially and competitively sensitive information and using such information to promote enforcement and monitoring of markets, I could be persuaded to adopt a different balance.

At this time, however, I believe that the Commission's very important interest in monitoring markets and protecting against the abuse of monopoly power by transmission providers does not outweigh the Commission's interest in protecting this type of commercially and competitively sensitive information and, thereby, promoting a vigorous and thriving wholesale power market.

For all of these reasons, I dissent from the decision to require the unmasking of source and sink information and to adopt revised procedures in the OASIS Standards and Communications Protocols Document to reflect this unmasking of information. I concur in all other respects with the findings of the order.

Vicky A. Bailey,
Commissioner.

Note: This attachment will not appear in the Code of Federal Regulations.

Attachment 2—Standards and Communication Protocols for Open Access Same-Time Information System (OASIS)

Version 1.2

May 27, 1998

Table of Contents

1. Introduction
    1.1 Definition of terms
2. Network Architecture Requirements
    2.1 Architecture of OASIS Nodes
    2.2 Internet-Based OASIS Network
    2.3 Communication Standards Required
    2.4 Internet Tool Requirements
    2.5 Navigation and Interconnectivity Between OASIS Nodes
3. Information Access Requirements
    3.1 Registration and Login Requirements
    3.2 Service Level Agreements
    3.3 Access to Information
    3.4 Provider Updating Requirements
    3.5 Access to Changed Information
    3.6 User Interaction With an OASIS Node
4. Interface Requirements
    4.1 Information Model Concepts
    4.2 OASIS Node Conventions and Structures
        4.2.1 OASIS Node Naming Requirements
            4.2.1.1. OASIS Node Names
            4.2.1.2. OASIS Node and Primary Provider Home Directory
            4.2.1.3 CGI Script Names
        4.2.2 Data Element Dictionary
        4.2.3 OASIS Template Constructs
            4.2.3.1 Template Construction
            4.2.3.2 Template Categories
            4.2.3.3 Template HTML Screens
        4.2.4 Query/Response Template Requirements
            4.2.4.1 Query Requirements
            4.2.4.2 Response Requirements
        4.2.5 Input/Response Template Requirements
            4.2.5.1 Input Requirements
            4.2.5.2 Response to Input
        4.2.6 Query Variables
            4.2.6.1 General
            4.2.6.2 Standard Header Query Variables
            4.2.6.3 Responses to Queries
            4.2.6.4 Multiple Instances
            4.2.6.5 Logical Operations
            4.2.6.6 Handling of Time Data Elements
            4.2.6.7 Default Values
            4.2.6.8 Limitations on Queries
        4.2.7 CSV Format
            4.2.7.1 General Record Format
            4.2.7.2 Input Header Records
            4.2.7.3 Response Header Records
            4.2.7.4 Data Records
            4.2.7.5 Continuation Records
            4.2.7.6 Error Handling in CSV-Formatted Responses
        4.2.8 Registration Information
            4.2.8.1 General
            4.2.8.2 Company Information
            4.2.8.3 User Information
        4.2.9 Representation of Time
            4.2.9.1 General
            4.2.9.2 Input Time
            4.2.9.3 Output (Response) Time
        4.2.10 Transaction Process
            4.2.10.1 Purchase Transactions
            4.2.10.2 Status Values
            4.2.10.3 Dynamic Notification
                4.2.10.3.1 HTTP Notification
                4.2.10.3.2 E-mail Notification
        4.2.11 Reference Identifiers
        4.2.12 Linkage of Ancillary Services to Transmission Services
    4.3 Template Descriptions
        4.3.1 Template Summary
        4.3.2 Query/Response of Posted Services Being Offered
            4.3.2.1 Transmission Capacity Offerings Available for Purchase (transoffering)

4.3.2.2 Ancillary Services Available for Purchase (ancoffering)
4.3.3 Query/Response of Services Information
4.3.3.1 Transmission Services (transserv)
4.3.3.2 Ancillary Services (ancserv)
4.3.4 Query/Response of Schedules and Curtailments
4.3.4.1 Hourly Schedule (schedule)
4.3.4.2 Curtailment/Interruption (curtail)
4.3.5 Query/Response of Lists of Information
4.3.5.1 List (list)
4.3.6 Query/Response to Obtain the Audit log
4.3.6.1 Audit Log Information (auditlog)
4.3.7 Purchase Transmission Services
4.3.7.1 Customer Capacity Purchase Request (transrequest)
4.3.7.2 Status of Customer Purchase Request (transstatus)
4.3.7.3 Seller Approval of Purchase (transsell)
4.3.7.4 Customer Confirmation of Purchase (Input) (transcust)
4.3.7.5 Alternate Point of Receipt/Delivery (transalt)
4.3.7.6 Seller to Reassign Service Rights to Another Customer (transassign)
4.3.8 Seller Posting of Transmission Services
4.3.8.1 Seller Capacity Posting (transpost)
4.3.8.2 Seller Capacity Modify (transupdate)
4.3.9 Purchase of Ancillary Services
4.3.9.1 Customer Requests to Purchase Ancillary Services (ancrequest)
4.3.9.2 Ancillary Services status (ancstatus)
4.3.9.3 Seller Approves Ancillary Service (ancsell)
4.3.9.4 Customer accepts Ancillary Service (anccust)
4.3.10 Seller Posting of Ancillary Services
4.3.10.1 Seller Ancillary Services Posting (ancpost)
4.3.10.2 Seller Modify Ancillary Services Posting (ancupdate)
4.3.11 Informal Messages
4.3.11.1 Provider/Customer Want Ads and Informal Message Posting Request (messagepost)
4.3.11.2 Message (message)
4.3.11.3 Provider/Sellers Message Delete Request (messagedelete)
4.3.11.4 Personnel Transfers (personnel)
4.3.11.5 Discretion (discretion)
4.3.11.6 Standards of Conduct (stdconduct)
4.4 File Request and File Download Examples
4.4.1 File Example for Hourly Offering
4.4.2 File Example for Hourly Schedule Data
4.4.3 Customer Posting a Transmission Service Offering
4.4.4 Example of Re-aggregating Purchasing Services using Reassignment
4.4.5 File Examples of the Use of Continuation Records
4.4.6 Example of Negotiation of Price
4.4.6.1 Negotiation with Preconfirmation
4.4.6.2 Negotiations without Preconfirmation
4.4.6.3 Multiple Step Negotiations
4.4.6.4 Negotiations Refused by Seller
4.4.6.5 Negotiations Withdrawn by Customer
4.5 Information Supported By Web Page
5. Performance Requirement
5.1 Security
5.2 Access Privileges
5.3 OASIS Response Time Requirements
5.4 OASIS Provider Account Availability
5.5 Backup and Recovery
5.6 Time Synchronization
5.7 TS Information Timing Requirements
5.8 TS Information Accuracy
5.9 Performance Auditing
5.10 Migration Requirements
Appendix A—Data Element Dictionary

ATTACHMENT 1.—ABBREVIATIONS OF NAMES USED IN ORDER

Entity name	Abbreviation
Alabama Power Company	(Alabama Power)
American Electric Power	(AEP)
American Public Power Association	(APPA)
Central Illinois Lighting Company	(CILCO)
Coalition for a Competitive Electric Market	(CCEM)
Commercial Practices Working Group	(Commercial Practices Group)
Commonwealth Edison Company	(Commonwealth Edison)
Continental Power Exchange	(CPEX)
Electric Clearinghouse, Inc	(Electric Clearinghouse)

ATTACHMENT 1.—ABBREVIATIONS OF NAMES USED IN ORDER—Continued

Entity name	Abbreviation
Electric Power Research Institute	(EPRI)
Electric Power Suppliers Association	(EPSA)
Florida Power Corporation	(Florida Power Corp)
Georgia Power Company	(Georgia Power)
Gulf Power Company	(Gulf Power)
Mississippi Power Company	(Mississippi Power)
OASIS How Working Group (EPRI)	(How Group)
National Rural Electric Cooperative Association	(NRECA)
New York Power Pool	(NYPP)
New York State Electric & Gas Corp	(NYSEG)
North American Electric Reliability Council	(NERC)
Pennsylvania—New Jersey—Maryland Power Pool	(PJM)
PECO Energy Company—Power Team	(PECO)
PECO Energy Company—Power Team and Vitol Gas & Electric, Ltd	(PECO Energy)
Savannah Electric and Power Company	(Savannah)
Southern Company Services, Inc.	(Southern)

1. Introduction

1.1 Definition of Terms

The following definitions are offered to clarify discussions of the OASIS in this document.

a. *Transmission Services Information (TS Information)* is transmission and ancillary services information that must be made available by public utilities on a non-discriminatory basis to meet the regulatory requirements of transmission open access.

b. *Open Access Same-Time Information System (OASIS)* comprises the computer systems and associated communications facilities that public utilities are required to provide for the purpose of making available to all transmission users comparable interactions with TS Information.

c. *Open Access Same-Time Information System Node (OASIS Node)* is a subsystem of the OASIS. It is one computer system in the (OASIS) that provides access to TS Information to a Transmission Customer.

d. *Transmission Provider (TP or Primary Provider)* is the public utility (or its designated agent) that owns, operates or controls facilities used for the transmission of electric energy in interstate commerce. (This is the same term as is used in Part 35.3).

e. *Transmission Customer (TC or Customer)* is any eligible Customer (or its designated agent) that can or does execute a transmission service agreement or can or does receive transmission service. (This is the same term as is used in Part 35.3).

f. *Secondary Transmission Provider (ST, Reseller, or Secondary Provider)* is any Customer who offers to sell transmission capacity it has purchased. (This is the same as Reseller in Part 37).

g. *Transmission Services Information Provider (TSIP)* is a Transmission Provider or an agent to whom the Transmission Provider has delegated the responsibility of meeting any of the requirements of Part 37. (This is the same as Responsible Party in Part 37).

h. *Value-Added Transmission Services Information Provider (VTSIP)* is an entity who uses TS Information in the same manner as a Customer and provides value-added information services to its Customers.

2. Network Architecture Requirements

2.1 Architecture of OASIS Nodes

a. Permit Use of Any OASIS Node Computers: TSIPs shall be permitted to use any computer systems as an OASIS Node, so long as they meet the OASIS requirements.

b. Permit Use of Any Customer Computers: OASIS Nodes shall permit the use by Customers of any commonly available computer systems, as long as they support the required communication links to the Internet.

c. Permit the Offering of Value-Added Services: TSIPs are required, upon request, to provide their Customers the use of private network connections on a cost recovery basis. Additional services which are beyond the scope of the minimum OASIS requirements are also permitted. When provided, these private connections and additional services shall be offered on a fair and non-discriminatory basis to all Customers who might choose to use these services.

d. Permit Use of Existing Communications Facilities: In implementing the OASIS, the use of existing communications facilities shall be permitted. The use of OASIS communication facilities for the exchange of information beyond that required for open transmission access (e.g., transfer of system security or operations data between regional control centers) shall also be permitted, provided that such use does not negatively impact the exchange of open transmission access data and is consistent with the Standards of Conduct in Part 37.

e. Single or Multiple Providers per Node: An OASIS Node may support a single individual Primary Provider (plus any Secondary Providers) or may support many Primary Providers.

2.2 Internet-Based OASIS Network

a. Internet Compatibility: All OASIS Nodes shall support the use of internet tools, internet directory services, and internet communication protocols necessary to support the Information Access requirements stated in Section 4.

b. Connection through the Public Internet: Connection of OASIS Nodes to the public Internet is required so that Users may access them through Internet links. This connection shall be made through a firewall to improve security.

c. Connection to a Private Internet Networks: OASIS Nodes shall support private connections to any OASIS User (User) who requests such a connection. The TSIP is permitted to charge the User, based on cost, for these connections. The same internet tools shall be required for these private networks as are required for the public Internet. Private connections must be provided to all users on a fair and nondiscriminatory basis.

d. Internet Communications Channel: The OASIS Nodes shall utilize a communications channel to the Internet which is adequate to support the performance requirements given the number of Users subscribed to the Providers on the Node (see section 5.3).

2.3 Communications Standards Required

a. Point-to-Point Protocol (PPP) and Internet Protocol Control Protocol (IPCP) (reference RFCs 1331 and 1332) shall be supported for private internet network dial-up connections.

b. Serial Line Internet Protocol (SLIP) (reference RFC 1055) shall be supported for private internet network dial-up connections.

c. Transport Control Protocol and Internet Protocol (TCP/IP) shall be the only protocol set used between OASIS Nodes whenever they are directly interconnected, or between OASIS Nodes and Users using private leased line internet network connections.

d. Hyper Text Transport Protocol (HTTP), Version 1.0 (RFC 1945), shall be supported by User's web browsers so they can use it to select information for viewing displays and for downloading and uploading files electronically.

e. Internet Protocol Address: All OASIS Nodes are required to use an IP address registered with the Internet Network Information Center (InterNIC), even if private connections are used.

2.4 Internet Tool Requirements

Support the following specific internet tools is required, both for use over the public Internet as well as for any private connections between Users and OASIS Nodes:

a. Hypertext Markup Language (HTML), at least Version 3.2 shall be used by supported by User's browsers as a standards tool for viewing information.

b. HTML Forms shall be provided by the TSIPs to allow Customers to enter information to the OASIS Node.

c. Domain Name Service (DNS) (ref. RFC 1034, 1035) shall be provided as a minimum by the TSIPs (or their Internet Service Provider) for the resolution of IP addresses to allow Users to navigate easily between OASIS Nodes.

d. Simple Network Management Protocol (SNMP) is recommended but not required to provide tools for operating and managing the network, if private interconnections between OASIS Nodes are established.

e. The Primary Provider shall support E-mail for exchanges with Customers, including the sending of attachments. The protocols supported shall include, as a minimum, the Simple Messaging Transfer Protocol (SMTP), Post Office Protocol (POP(), and Multipurpose Internet Mail Extensions (MIME).

2.5 Navigation and Interconnectivity Between Oasis Nodes

a. World Wide Web Browsers: TSIPs shall permit Users to navigate using WWW browsers for accessing different sets of TS Information from one Provider, or for getting to TS Information from different Providers on the same OASIS Node. These navigation methods shall not favor User access to any Provider over another Provider, including Secondary Providers.

b. Internet Interconnection across OASIS Nodes: Navigation tools shall not only support navigation within the TSIP's Node, but also across interconnected OASIS Nodes. This navigation capability across interconnected Nodes shall, as a minimum, be possible through the public Internet.

3. Information Access Requirements

3.1 Registration and Login Requirements

a. Location of Providers: To provide Users with the information necessary to access the desired Provider, all Primary Providers shall register their OASIS Node URL address with www.tsin.com. This URL address should include the unique four letter acronym the Primary Provider will use as the PRIMARY__PROVIDER__CODE.

b. Initial User Registration: TSIPs shall require Users to register with a Primary Provider before they are permitted to access the Provider's TS Information. There must be a reference pointing to registration procedures on each Primary Provider's home page. Registration procedures may vary with the administrative requirements of each Primary Provider.

c. Initial Access Privileges: Initial registration shall permit a User only the minimum Access Privileges. A User and a Primary Provider shall mutually determine what access privilege the User is permitted. The TSIP shall set a User's Access Privilege as authorized by the Primary Provider.

d. User Login: After registration, Users shall be required to login every time they establish a dial-up connection. If a direct, permanent connection has been established, Users shall be required to login initially or any time the connection is lost. Use of alternative forms of login and authentication using certificates and public key standards is acceptable.

e. User Logout: Users shall be automatically loged out any time they are disconnected. Users may logout voluntarily.

3.2 Service Level Agreements

Service Level Agreements: It is recognized that Users will have different requirements for frequency of access, performance, et., based on their unique business needs. To accommodate these differing requirements, TSIPs shall be required to establish a ''Service Level Agreement'' with each User which specifies the terms and conditions for access to the information posted by the Providers. The default Service Level Agreement shall be Internet access with the OASIS Node meeting all minimum performance requirements.

3.3 Access to Information

a. Display: TSIPs shall format all TS Information on HTML format such that it may be viewed and read directly by Users without requiring them to download it. This information shall be in clear English as much as possible,

with the definitions of any mnemonics or abbreviations available on-line. The minimum information that is to be displayed is provided in the Templates in Section 4.3.

b. Read-Only Access to TS Information: For security reasons, Users shall have read-only access to the TS Information. They shall not be permitted to enter any information except where explicitly allowed, such as HTML transaction request forms or by the Templates in Section 4.3.

Downloading Capability: Users shall be able to download from an OASIS Node the TS Information in electronic format as a file. The rules for formatting of this data are described in Section 4.2.

d. On-Line Data Entry on Forms: Customers shall be permitted to fill out on-line the HTML forms supplied by the TSIPs, for requesting the purchase of services and for posting of products for sale (by Customers who are resellers). Customers shall also be permitted to fill-out and post Want-Ads.

e. Uploading Capability: Customers shall be able to upload to OASIS Nodes the filled-out forms. TSIPs shall ensure that these uploaded forms are handled identically to forms filled out on-line. TSIPs shall provide forms that support the HTTP input of Comma Separated Variable (CSV) records. This capability shall permit a Customer to upload CSV records using standard Web browsers or additional client software (such as fetch__http) to specify the location of the CSV records stored on the Customer's hard disk.

f. Selection of TS Information: Users shall be able to dynamically select the TS Information they want to view and/or download. This selection shall be, as a minimum, through navigation to text displays, the use of pull-down menus to select information for display, data entry into forms for initiating queries, and the selection of files to download via menus.

3.4 Provider Updating Requirements

The following are the Provider update requirements:

a. Provider Posting of TS Information: Each Provider (including Secondary Providers and Value-Added Providers) shall be responsible for writing (posting) and updating TS Information on their OASIS node. No User shall be permitted to modify a Provider's Information.

b. Info.htm: Each Provider shall provide general information on how to use their node and describe all special aspects, such as line losses, congestion charges and assistance. The address for the directory of this information shall be info.htm, an HTML web page, linked to the Provider's registered URL address.

c. OASIS Node Space for Secondary Provider: To permit Users to readily find TS Information for the transmission systems that they are interested in. TSIPs shall provide database space on their OASIS Node for all Secondary Providers who have purchased, and who request to resell, transmission access rights for the power systems of the Primary Providers supported by that Node.

d. Secondary Provider Posting to Primary Provider Node: The Secondary Providers shall post the relevant TS Information on the OASIS Node associated with each Primary Provider from whom the transmission access rights were originally purchased.

e. Secondary Provider Posting Capabilities: The TSIPs shall ensure that the Secondary Providers shall be able to post their TS Information to the appropriate OASIS Nodes using the same tools and capabilities as the Customers, meet the same performance criteria as the Primary Providers, and allow users to view these postings on the same display page, using the same tables, as similar capacity being sold by the Primary Providers.

f. Free-Form Posting of non-TS Information. The TSIP shall ensure that non-TS Information such as Want-Ads, may be posted by Providers and Customers, and that this information is easily accessible by all Users. The TSIP shall be allowed to limit the volume and/or to charge for the posting of non-TS Information.

g. Time Stamps: All TS Information shall be associated with a time stamp to show when it was posted to the OASIS Node.

h. Transaction Tracking by an Assignment Reference Number: All requests for purchase of transmission or ancillary services will be marked by a unique accounting number, called an assignment reference.

i. Time-Stamped OASIS Audit Log: All posting of TS Information, all updating of TS Information, all User logins and disconnects, all User download requests, all Service Requests, and all other transactions shall be time stamped and stored in an OASIS Audit Log. This OASIS Audit Log shall be the official record of interactions, and shall be maintained on-line for download for at least 90 days. Changes in the values of posted Capacity (Available Transfer Capability) must be stored in the on-line audit Log for 20 days. Audit records must be maintained for 3 years off-line and available in electronic form within seven days of a Customer request.

j. Studies: A summary description with dates, and programs used of all transmission studies used to prepare data for the Primary Provider's ATC and TTC calculation will be provided along with information as to how to obtain the study data and results.

3.5 Access to Changed Information

a. General Message & Log: TSIPs shall post a general message and log that may be read by Users. The message shall state that the Provider has updated some information, and shall contain (or point to) a reverse chronological log of those changes. This log may be the same as the Audit Log. The User may use the manual capability to see the message.

b. TSIP Notification Design Responsibilities: The TSIP shall avoid a design that could cause serious performance problems by necessitating frequent requests for information from many Users.

3.6 User Interaction With an OASIS Node

There are three basic types of User interactions which must be supported by the OASIS Node. These interactions are defined in Section 4.3.

a. Query/Response: The simplest level of interactions is the query of posted information and the corresponding response. The User may determine the scope of the information queried by specifying values, through an HTML form,

a URL string, or an uploaded file, using Query Variables and their associated input values as defined with each Template in Section 4.3. The response will be either an HTML display or a record oriented file, depending on the output format that the User requests.

The TSIP may establish procedures to restrict the size of the response, if an overly broad query could result in a response which degrades the overall performance of the OASIS Node for their Users.

b. Purchase Request: The second type of Customer interaction is the submittal of a request to purchase a service. The Customer completes an input form, a URL string or uploads a file and submits it to the OASIS Node. The uploaded file can either be a series of query variables or a record oriented file.

The request is processed by the Seller of the service, possibly off-line from the OASIS Node, and the status is updated accordingly.

If a purchase request is approved by the Seller, then it must be again confirmed by the Customer. Once the Customer confirms an approved purchase, a reservation for those services is considered to exist, unless later the reservation is reassigned, displaced, or annulled.

c. Upload and Modify Postings: Customers who wish to resell their rights may upload a form, create the appropriate URL or upload a file to post services for sale. A similar process applies to eligible Third Party Sellers of ancillary services. The products are posted by the TSIP. The seller may monitor the status of the services by requesting status information. Similarly the Seller may modify its posted transmission services by submitting a service modification request through a form, a URL query, or by uploading a file.

4. Interface Requirements

4.1 Information Model Concepts

a. ASCII-Bases OASIS Templates: For providing information to Users, TSIPs shall use the specified OASIS Templates. These Templates define the information which must be presented to Users, both in the form of graphical displays and as downloaded files. Users shall be able to request Template information using query-response data flows. The OASIS Templates are described in section 4.3. The Data Element Dictionary, which defines the data elements in the OASIS Templates, is provided in Appendix A.

Data elements must be used in the exact sequence and number as shown in the Templates when file uploads and downloads are used. Although the contents of the graphical displays are precisely defined as the same information as in the Templates, the actual graphical display formats of the TS information are beyond the scope of the OASIS requirements. Due to the nature of graphical displays, there may be more than one graphical display used to convey the information in a single Template.

b. ASCII-Based OASIS File Structures: For uploading requests from and downloading information to Users, TSIPs shall use specific file structures that are defined for OASIS Template information (see section 4.2). These file structures are based on the use of headers which contain the Query Variable information, including the name of the OASIS Template. These headers thus determine the contents and the format of the data follows. Although headers may not be essential if file transfers contain the exact sequence and number of data elements as the Templates, this feature is being preserved for possible future use when additional flexibility may be allowed.

4.2 OASIS Node Conventions and Structures

4.2.1 OASIS Node Naming Requirements

The following naming conventions shall be used to locate information posted on OASIS. OASIS naming conventions shall conform to standard URL structures.

4.2.1.1 OASIS Node Names

In order to provide a consistent method for locating an OASIS Node, the standard Internet naming convention shall be used. All OASIS Node names shall be unique. Each Primary Provider OASIS Node name and home directory shall be registered with the master OASIS directory site at http://www.tsin.com. OASIS Node names shall be stored in an Internet DNS name directory.

4.2.1.2 OASIS Node and Primary Provider Home Directory

The home directory name on an OASIS Node shall be ''OASIS'' to identify that the directory is related to the OASIS. The directory of each Primary Provider shall be listed under the ''OASIS'' directory:

http://(OASIS Node name)/OASIS/(PRIMARY__PROVIDER__CODE)

Where:

(OASIS Node name) is the World Wide Web URL address of the OASIS Information Provider.

(PRIMARY__PROVIDER__CODE is the 4 character acronym of the primary provider.

(PRIMARY__PROVIDER__CODEs shall be registered with the master OASIS directory site at http://www.tsin.com. A pointer to user registration information shall be located on the Primary Provider's home page.

4.2.1.3 CGI Script Names

Common Gateway Interface (CGI) scripts shall be located in the directory ''data'' as follows:

http://(OASIS Node name)/OASIS/(PRIMARY__PROVIDER__CODE)/data/(cgi script name)?(query variables)

Where:

(cgi script name) is the OASIS Template name (see Section 4.3). Other cgi scripts may be defined as required to implement the HTML interface to the documented templates. (query variables) is a list of query variables with their settings formatted as defined by the HTTP protocol (i.e., URL encoded separated by ampersands).

Example:

To request the hourly schedule Template at Primary Provider WXYZ Co. http://www.wxyz.com/oasis/wxyz/data/schedule ?templ=schedule& ver=1.2& fmt=data & stime=19960412040000PD &sptime=19960412100000PD& pprov=wxyz

4.2.2 Data Element Dictionary

The following are the requirements for the Data Element Dictionary:

a. Definition of OASIS Information Elements: All OASIS Information data elements shall be defined in the Data Element Dictionary which will be stored in the OASIS Node directory:

http://(OASISNode Name)/OASIS/(PRIMARY__PROVIDER__CODE/ (datadic.html 1 datadict.txt)

Where:

datadic.html is the HTML version of the data element dictionary
datadic.txt is the ASCII text version of the data element dictionary

The Data Element Dictionary is defined in Appendix A.

b. Provider-specific Data Element Values: The valid values that certain OASIS Information data elements may take on, such as PATH__NAME, etc., are unique to a Primary Provider. Names which must be uniquely identified by Primary Provider shall be listed on-line on the OASIS Node via the LIST Template (see Section 4.3.5). In posting OASIS information associated with data elements which are not free-form text, TSIPs shall use only the accepted data element values listed in the Data Element Dictionary and/or those values posted in the LIST of provider specific names provided on the OASIS.

4.2.3 OASIS Template Constructs

4.2.3.1 Template Construction

Section 4.3 lists the set of OASIS Templates that shall be supported by all OASIS nodes. These OASIS Templates are intended to be used precisely as shown for the transfer of data to/from OASIS, and identify, by Data Elements names, the information to be transferred. The construction of the OASIS Templates shall follow the rules described below:

a. Unique OASIS Template Name: Each type of OASIS Template shall be identified with a unique name which shall be displayed to the User whenever the OASIS Template is accessed.

b. Transfer Protocol: OASIS Templates are transferred using the HTTP protocol. Templates shall support both the ''GET'' and ''POST'' methods for transferring ''query string'' name/value pairs, as well as the OASIS specific ''comma separated value'' (CSV) format for posting and retrieval of information from OASIS. HTML screens and forms shall be implemented for each OASIS Template.

c. Source Information: Each OASIS Template shall identify the source of its information by including or linking to the name of the Primary Provider, the Secondary Provider, or the Customer who provided the information.

d. Time Of Last Update: Each OASIS Template shall include a time indicating when it was created or whenever the value of any Data Element was changed.

e. Data Elements: OASIS Templates shall define the elementary Data Element Dictionary names for the data values to be transferred or displayed for that Template.

f. Documentation: OASIS Information shall be in non-cryptic English, with all mnemonics defined in the Data Element Dictionary or a glossary of terms. TSIPs shall provide on-line descriptions and help screens to assist Users understanding the displayed information. Documentation of all formats, contents, and mnemonics shall be available both as displays and as files which can be downloaded electronically. In order to meet the ''User-Friendly'' goal and permit the flexibility of the OASIS to expand to meet new requirements, the OASIS Templates shall be as self-descriptive as possible.

4.2.3.2 Template Categories

OASIS Templates are grouped into the following two major categories:

a. Query/Response: These Templates are used to query and display information posted on OASIS. Each query/response Template accepts a set of user specified Query Variables and returns the appropriate information from data posted on OASIS based on those query variables. The valid Query Variables and information to be returned in response are identified by Data Element in Section 4.3.

b. Input/Response: These Templates are used to upload/input information on OASIS. The required input information and information to be returned in response are identified by Data Element in Section 4.3, Template Descriptions.

4.2.3.3 Template HTML Screens

Though the exact form and content of the HTML screens and forms associated with the OASIS Templates are not dictated by this document, the following guidelines shall be adhered to for all HTML screens and forms implemented on OASIS:

a. Data Element Headings: Data displayed in an HTML screen/form shall be labeled such that the associated data value(s) is(are) easily and readily identifiable as being associated with a particular OASIS Template Date Element. HTML ''Hot-Links'' or other pointer mechanisms may be provided for Data Element headings in OASIS Templates which permit the User to access documentation describing the meaning, type, and format of the associated data.

b. Display Limitations: HTML screens and forms shall be implemented in such a way to allow the display of all data specified for each OASIS Template. This may take the form of ''wrapping'' of lines of information on the screen, the use of horizontal and/or vertical scrolling, or the use of ''Hot-Links'' or other pointer mechanisms. There is not necessarily a one-to-one relationship between OASIS implemented HTML screens and their associated Template. However, all Template data elements shall be viewable through one or more HTML screens.

c. Template Navigation: HTML ''Hot-Links'' or other pointer mechanisms may be provided to assist the navigation between screens/forms associated with related OASIS Templates.

4.2.4 Query/Response Template Requirements

Retrieval of information posted on OASIS is supported by the Query/Response Templates. The ''query'' identifies the OASIS Template and optionally supplies additional Data Elements which may be used to select specific information to be returned in the ''response''.

4.2.4.1 Query Requirements

Query information is transferred to OASIS using the HTML protocol as a string of Query Variables in the form of name/value pairs. Query Variable name/value pairs are specified as a collection encoded strings (e.g., blank characters replaced by plus (+) character, etc.) in the form of name=value, with each name/value pair separated by ampersands (&) (see section 4.2.6). OASIS shall support the following methods for Users to input Query information:

a. HTML: HTML FORM input and/or hypertext links shall be provided to allow Users to specify OASIS Template Query Variables. This will be the easiest way to obtain information should be the choice of most causal Users and for simple requests. The exact nature and form of these HTML screens are not specified, and may differ between OASIS nodes.

b. GET Method: The HTML GET method for specifying query information appended to a standard OASIS URL shall be supported. Using this method, the name=value formatted Query Variables preceded by a question mark (?) are appended to the URL. Each ''name'' in a name/value pair corresponds to a Data Element name associated with that Template, OASIS shall support the specification of all Data Elements associated with a Template by both their full name and alias as defined in the Data Dictionary. The ''value'' in a name/value pair represents the value to be associated with the Data Element being specified in the appropriate format as defined in the Data Dictionary and encoded according to the HTML protocol.

c. POST Method: The HTML POST method for specifying query information in the message body shall be supported. Using this method, the name=value formatted Query Variables shall be transferred to OASIS suing the ''Content-length:'' HTML header to define the length in bytes of the encoded query string and the ''Content-type: application/x-www-form-urlencoded'' HTML header to identify the data type included in the message body. Each ''name'' in a name/value pair corresponds to a Data Element name associated with that Template. OASIS shall support the specification of all Data Elements associated with a Template by both their full name and alias as defined in the Data Dictionary. The ''value'' in a name/value pair represents the value to be associated with the Data Element being specified in the appropriate format as defined in the Data Dictionary and encoded according to the HTML protocol.

User queries using any of the above methods are supported directly by the User's web browser software. More sophisticated data transfer mechanisms, such as the automated querying of information based on Query Variable strings contained in a User data file (i.e., ''uploading a file containing a URL string), require appropriate software (e.g., ''fetch__http'') running on the User's computer system to effect the data transfer.

4.2.4.2 Response Requirements

In response to a validly formatted Query for each Query/Response OASIS Template, the OASIS shall return the requested information in one of two forms based on the User specified OUTPUT__FORMAT Query Variable:

a. HTML: If the User requests the response to have the format of ''HTML'' (OUTPUT__FORMAT=HTML) then the response from the OASIS shall be a web page using the HTML format. This shall be the default for all Query/Response Templates.

b. CSV Format: Comma Separated Value (CSV) format (OUTPUT__FORMAT=DATA) returns the requested information in the body of the HTML response message. The ''Content-length:'' HTML header shall define the length in bytes of the response, and the ''Content-type: text/x-oasis-csv'' HTML header shall be used to identify the data type included in the message body (see CSV File Format).

4.2.5 Input/Response Template Requirements

The posting of information on OASIS, including reservations for transmission/ancillary service, services for sale on the secondary market, etc., is supported by the Input/Response Templates. The ''input'' identifies the required data associated with an OASIS Template to be posted on OASIS, and the ''response'' specifies the information returned to the User.

4.2.5.1 Input Requirements

Input information is transferred to OASIS using the HTTP protocol as either a string of Query Variable in the form of name/value pairs, or as a Comma Separated Value (CSV) message. Query Variable name/value pairs are specified as a collection of encoded strings (e.g., blank characters replaced by plus (+) character, etc.) in the form of name=value, with each name/value pair separated by ampersands (&). CSV formatted messages are specified in the body of an HTTP message as a series of data records preceded by a fixed set of header records (see section 4.2.7).

OASIS shall support the following methods for Users to transfer Input data:

a. HTML: HTML FORM input shall be provided to allow Users to specify the necessary Input data associated with each Input/Response OASIS Template. This may be in the form of fill in blanks, buttons, pull-down selections, etc., and may use either the GET or POST methods. The exact nature and form of these HTML screens are not specified, and may differ between OASIS nodes.

b. GET Method: The HTTP GET method for specifying Input information in the form of a query string appended to a standard OASIS URL shall be supported. Using this method, the name=value formatted Query Variables preceded by a question mark (?) are appended to the URL. Each ''name'' in a name/value pair corresponds to a Data Element name associated with that Template. OASIS shall support the specification of all Data Elements associated with a Template by both their full name and alias as defined in the Data Dictionary. The ''value'' in a name/value pair represents the value to be associated with the Data Element being specified in the appropriate format as defined in the Data Dictionary and encoded according to the HTTP protocol.

c. POST Method: The HTTP POST method for specifying Input information in the form of a query string in the message body shall be supported. Using this method, the name-value formatted Query Variables shall be transferred to OASIS using the ''Content-length:'' HTTP header to define the length in bytes of the encoded query string and the ''Content-type: application/x-www-form-urlencoded'' HTTP header to identify the data type included in the message body. Each ''name'' in a name/value pair corresponds to a Data Element name associated with that Template. OASIS shall support the specification of all Data Elements associated with a Template by both their full name and alias as defined in the Data Dictionary. The ''value'' in a name/value pair represents the value to be associated with the Data Element being specified in the appropriate format as defined in the Data Dictionary and encoded according to the HTTP protocol.

d. CSV Format: Comma Separated Value (CSV) formatted Input information transferred in the body of a User's HTTP message shall be supported. The ''Content-length:'' HTTP header shall define the length in bytes of the Input, and the ''Content-type: text/x-oasis-csv'' HTTP header shall be used to identify the data type included in the message body.

4.2.5.2 Response to Input

In response to a validly formatted Input for each Input/Response OASIS Template, the OASIS shall return an indication as to the success/failure of the requested action. The OASIS shall respond to the Input in one of two forms, based on the OUTPUT__FORMAT, which was input by a User either as a Query Variable or in a CSV format Header Record:.

a. HTML: If the User requests the response to have the format of ''HTML'' (OUTPUT__FORMAT=HTML) then the response from the OASIS shall be a web page using the HTML format. This shall be the default for all Input/Response Templates invoked using either the FORM, GET or POST methods of input.

b. CSV Format: Coma Separated Value (CSV) format (OUTPUT__FORMAT=DATA) returns the response information in the body of the HTTP response message. The ''Content-length:'' HTTP header shall define the length in bytes of the response, and the ''Content-type: text/x-oasis-csv'' HTTP header shall be used to identify the data type included in the message body. This shall be the default for all Input/Response Templates invoked using the CSV Format methods of input.

4.2.6 Query Variables

4.2.6.1 General

Both Query/Response and Input/Response OASIS Templates shall support the specification of a query string consisting of Query Variables formatted as name/value pairs. OASIS shall support the specification of Data Element names (''name'' portion of name=value pair) in both the full name and alias forms defined in the Data Dictionary. OASIS shall support the specification of Query Variables from the User using either the HTTP GET or POST methods. On input, Data Element names and associated values shall be accepted and processed without regard to case. On output, Data Element names and associated values may not necessarily retain the input case, and could be returned in either upper or lower case.

4.2.6.2 Standard Header Query Variables

The following standard Query Variable Data Elements shall be supported for all OASIS Templates and must be entered for each Query by a User:

VERSION
TEMPLATE
OUTPUT__FORMAT
PRIMARY__PROVIDER__CODE
PRIMARY__PROVIDER__DUNS
RETURN__TZ

Since these header Query Variables must be supported for all Templates, they are not listed explicitly in the Template description in Section 4.3.

All standard header Query Variables with appropriate values must be entered by the User.

4.2.6.3 Responses to Queries

Responses to Queries will include the following information as a minimum:

TIME__STAMP
VERSION
TEMPLATE
OUTPUT__FORMAT
PRIMARY__PROVIDER__CODE
PRIMARY__PROVIDER__DUNS
RETURN__TZ

The additional information shall include:

a. The requested information as defined by the Template indicated in the Query.

b. For CSV downloads, the additional header Data Elements required (see section 4.2.7.3).

4.2.6.4 Multiple Instances

Certain Query Variables may be repeated in a given Query/Response OASIS Template query string. Where such multiple instances are documented in the Template definitions using an asterix (*) after the query variable. When more than one instance of the query Variable is specified in the query string, OASIS shall recognize such multiple instances by either the Data Element's full name or alias suffixed with sequential numeric qualifiers starting with

the number 1, (e.g., PATH__NAME1=abc&PATH__NAME2=xyz, or PATH1=abc&PATH2=xyz). At least 4 multiple instances will be permitted for each query variable marked with an asterix (*).

4.2.6.5 Logical Operations

OASIS shall use the following logical operations when processing Query Variables for Query/Response OASIS Templates. All Query Variables, with the exception of multiple instances of the same Query Variable Data Element, shall be operated on to return information based on the logical-AND of those Query Variables. For example, the query string ''...SELLER__CODE=abc&PATH=xyz...'' should return information associated with only those records that are on transmission path ''xyz'' AND associated with transmission provider ''abc.'' Multiple instances of the same Query Variable shall be operated on as logical-OR. For example,''... SELLER__CODE=abc&PATH1=xyz&PATH2=opq...'' should return information associated with transmission provider ''abc'' AND either transmission path ''xyz'' OR transmission path ''opq''. Some logical operations may exclude all possibilities, such that the responses may not contain any data.

4.2.6.6 Handling of Time Data Elements

In cases where a single query variable is provided to select information associated with a single template data element that represents a point in time (e.g., TIME__OF__LAST__UPDATE), OASIS shall return to the User all requested information whose associated data element time value (e.g. TIME__OF__LAST__UPDATE) is equal to or later than the value specified by the query variable. In this case the stop time is implicitly ''now''.

A pair of query variables (e.g. START__TIME__QUEUED and STOP__TIME__QUEUED) that represents the start and stop of a time interval but is associated with one single template data element (e.g. TIME__QUEUED shall be handled by OASIS to return to the User all requested information whose associated data element time value falls within the specified time interval.

A pair of query variables (e.g. START__TIME and STOP__TIME query variables) that represents the start and stop of one time interval but is associated with another pair of template data elements (e.g. START__TIME and STOP__TIME of a service offering) that represents a second time interval, shall be handled by OASIS to return to the User all requested information whose associated data element time interval overlaps any portion of the specified time interval. Specifically, the START__TIME query variable selects all information whose STOP__TIME data element value is later than the START__TIME query variable, and the STOP__TIME query variable selects all information whose START__TIME data element value is earlier than the STOP__TIME query variable. For example:

The transoffering template query string ''START__TIME 970101000000ES&STOP__TIME970201000000ES'' shall select from the OASIS database all associated offerings whose start/stop times overlap any portion of the time from 00:00 January 1, 1997, to 00:00 February 1, 1997. This would include offerings that (1) started prior to Jan. 1 and stopped any time on or after Jan. 1, and (20 started on or after Jan. 1 but before Feb. 1

For changes to and from daylight savings time, either Universal Time or the correct time and zone must be used, based on whether daylight savings time is in effect.

All Time values shall be checked upon input to ensure their validity with respect to date, time, time zone, and daylight savings time.

4.2.6.6 Default Values

Query Variables that are not specified by the User may take on default values as appropriate for that Query Variable at the discretion of the OASIS TSIP.

4.2.6.8 Limitations on queries

OASIS TSIP may establish validation procedures and/or default values for Query Variables to restrict the size and/or performance impact of overly broad queries.

4.2.7 CSV Format

4.2.7.1 General Record Format

OASIS Users shall be able to upload information associated with Input/Response OASIS Templates and download information associated with all OASIS Templates using a standardized Comma Separated Value (CSV) format. CSV formatted data is transferred to/from OASIS as part of the body of an HTTP message using the ''Content-length:'' HTTP header to define the length in bytes of the message body, and the ''Content-type: text/x-oasis-csv'' HTTP header to identify the data type associated with the message body. CSV formatted data consists of a fixed set of header records followed by a variable number of data records. Each record shall be separated by a carriage return plus line feed (denoted by the symbol ↵ in all examples). The fields within a record shall be delimited by commas(,). All data within a CSV formatted message shall use printable ASCII characters with no other special embedded codes, with the exception of the special encoding requirements associated with text fields.

4.2.7.2 Input Header Records

The following standard header records are required for the uploading of Input data for all Input/Response OASIS Templates:

VERSION-nn.n¬
TEMPLATE=aaaaaaaaaa¬
OUTPUT__FORMAT=[DATA]¬
PRIMARY__PROVIDER__CODE=aaaa¬
PRIMARY__PROVIDER__DUNS=nnnnnnnnn¬
RETURN__TZ=aa¬

DATA__ROWS=nnn¬
COLUMN__HEADERS=[Template data element names separated by commas]¬

The format of the value associated with each of the Input header record Data Elements are dictated by the Data Dictionary.

The value associated with the DATA__ROWS Data Elements shall define the total Number of data records that follow in the message after the COLUMN__HEADERS record.

The COLUMN__HEADERS record defines, by Data Element name, the data associated with each comma separated column contained in each subsequent data record (row). On Input, either the Data Element's full name or alias listed in the Data Dictionary may be specified.

4.2.7.3 Response Header Records

When explicitly specified using the OUTPUT__FORMAT=DATA Query Variable or implied by the Input of a CSV format message, the OASIS shall respond with the following standard response header records for all OASIS Templates:

REQUEST__STATUS=nnn¬
ERROR__MESSAGE=aaa...¬
TIME__STAMP=yyyymmddhhmmsstz¬
VERSION=nn.n¬
TEMPLATE=aaaaaaaaaa¬
OUTPUT__FORMAT=DATE¬
PRIMARY__PROVIDER__CODE=aaaa¬
PRIMARY__PROVIDER__DUNS=nnnnnnnnn¬
RETURN__TZ=tz¬
DATA__ROWS=nnn¬
COLUMN__HEADERS=[Template data element names separated by commas]¬

The format of the value associated with each of the Response header record Data Elements are dictated by the Data Dictionary.

The value associated with the DATA__ROWS Data Element shall define the total number of data records returned in the message following the COLUMN__HEADERS header record.

The COLUMN__HEADERS record defines, by Data Element name, the data associated with each comma-separated column contained in each subsequent data record (row). In all OASIS responses, the Data Element's full name shall be listed in the COLUMN__HEADERS record. The order of the column headings shall be the same as shown in the Templates for URL uploads and downloads. For graphical displays, the Provider may define the order that the Data Element names are shown.

4.2.7.4 Data Records

Data Records immediately follow the standard Input or Response header records. With the exception of data records grouped together as a single ''logical record'' through the use of Continuation Records, each data record in a CSV formatted Input message represents a single, complete execution of the associated OASIS Template. That is, sending five CSV formatted Input messages for a given Template to the same PRIMARY__PROVIDER__CODE with a single data record per message shall be handled in the exactly the same fashion as sending a single CSV formatted Input message for the same Template and PRIMARY__PROVIDER__CODE which contains five data records.

Each field (column) within each data record defines the value to be associated with the corresponding Data Element defined in the COLUM__HEADERS record. The number of Data Records in the message is defined by the DATA__ROWS header record. The data values associated with each column Data Element are interpreted based on the Data Element type as defined in the Data Dictionary:

a. Numeric Data Element: All numeric Data Elements shall be represented by an ASCII string of numeric digits in base ten, plus the decimal point.

b. Text Data Elements: Alphabetic and alphanumeric data elements shall be represented as ASCII strings and encoded using the following rules:

- Text strings that do not contain commas (,) or double quotes (') shall be accepted both with and without being enclosed by double quotes.
- Text fields with commas (,) or double quotes (') must be enclosed with double quotes. In addition double quotes within a text field shall be indicated by two double quotes (''').
- The Data Element field length specified in Data Dictionary does not include the additional double quotes necessary to encode text data.

a. Null Data Elements: Null Data Elements shall be represented by two consecutive commas (,,) corresponding to the leading and trailing (if appropriate) Data Element commas separators. Null text strings may optionally be represented by two consecutive double quote characters within the leading and trailing comma separators (i.e., ...,'',...).

4.2.7.5 Continuation Records

Continuation records shall be used to indicate that the information in multiple rows (records) is part of one logical record. Continuation records will be indicated through the use of a column header called CONTINUATION__FLAG. This column header is either the first column (if in a response to a query) or second column (if in a response to an input) in all Templates permitting continuation records. The first record shall contain a ''N'' in the CONTINUATION__FLAG column and each following record which is part of a continuation record shall contain a ''Y'' in this column, thus associating the information in that record with the information in the previous record. An ''N'' shall indicate that the record is not a continuation record. Any values corresponding to COLUMN__HEADERS other than those explicitly allowed for a particular Template shall be ignored. However commas must be included to properly align the fields.

4.2.7.6 Error Handling in CSV-Formatted Responses

Validity of each record in the CSV-formatted Response to a Template Input shall be indicated through the use of RECORD__STATUS and ERROR__MESSAGE Data Elements which are included in each data record (row) of the Response.

- If no error was encountered in an Input data record, the RECORD__STATUS Data Element in the corresponding Response record shall be returned with a value of 200 (success), and the ERROR__MESSAGE shall be blank.
- If any error is detected in processing an Input data record, it shall be indicated by a RECORD__STATUS Data Element value other than 200. The ERROR__MESSAGE shall be set to an appropriate text message to indicate the source of the error in that data record.

The overall validity of each Template Query or Input shall be indicated in the CSV-formatted Response via the two REQUEST__STATUS and ERROR__MESSAGE header records (see section 4.2.7.3):

- If no errors were encountered in processing the User's Input data records, the REQUEST__STATUS shall be returned with the value of 200 (success), and the ERROR__MESSAGE shall be blank.
- If any errors were detected in the Template Input data records, the REQUESTS__STATUS value shall be any value other than 200, and the ERROR__MESSAGE shall be set to an appropriate text message to indicate the source of the error.

The OASIS node shall validate all Input records before returning a Response to the User. All valid records shall be processed by the node, while invalid records shall be identified as erroneous through the use of RECORD__STATUS and ERROR__MESSAGE. The User must correct the invalid fields and resubmit only those records which were invalid. If an error is encountered in a record which is part of a set of Continuation records, then all records belonging to that set must be resubmitted.

4.2.8 Registration Information

4.2.8.1 General

As specified in the Information Access Requirements. OASIS Nodes shall provide a mechanism to register Users of the OASIS with a Provider. For all levels of access to OASIS information beyond simple read-only access. OASIS node shall provide a mechanism to identify Users of the OASIS at least to the level of their respective Companies. Both Company and User registration information shall be maintained by the OASIS node.

4.2.8.2 Company Information

OASIS Templates require that certain Company registration information be maintained. As an extension of the Company registration information of the host, domain and port identifiers for dynamic notification of changes in the Customer's purchase requests, a field should be added to the Company's registration information that would define/identify how notification would be delivered to that Company should a transmission or ancillary purchase request be directed to that Company as a Seller of a transmission or ancillary service. The pertinent information would be either a full HTTP protocol URL defining the protocol, host name, port, path, resource, etc. information or a ''mailto:'' URL with the appropriate mailbox address string. On receipt of any purchase request directed to that Company as SELLER via either the ''transrequest'' or ''ancrequest'' templates, or on submission of any change in request STATUS to that Company as SELLER via either the ''transcust'' or ''anccust'' templates, a notification message formatted as documented for the delivery of notification to the Customer, shall be formatted and directed to the Seller. At a minimum, OASIS shall maintain the following information for each Company:

a. Company Code: 4 character code for primary transmission providers; 6 character code for eligible customers in accordance with NERC Tagging Information System (TIS) requirements shall be maintained for each Company.

b. Default Contact: Unless specified for each individual user affiliated with the Company, default contact information consisting of a phone number, fax number, and e-mail address shall be maintained for each Company.

c. Provider Affiliation: Each eligible Customer shall be obligated to identify to the OASIS TSIP any affiliation with a Transmission Provider whose ''home page'' is on that OASIS node.

d. Notification URL: For Companies using the URL notification mechanism for delivery of messages on each change of ancillary/transmission reservation STATUS, each Company shall provide the IP host name and port number to be used in delivering notification messages. OASIS nodes shall have the right to refuse support for notification to any IP ports other than port 80.

4.2.8.3 User Information

With the exception of ''read-only'' (visitor) access. OASIS nodes shall as a minimum provide a mechanism to identify Users of the node with at least their Company. However, OASIS nodes and Providers shall have the right to require full User identification even for visitor accounts.

To support the required OASIS Template Data Elements, OASIS nodes shall maintain the following information for each registered User:

- Company
- Name
- Phone
- Fax
- E-mail

In the event no additional additional User identification/registration information is maintained by the OASIS, all Template Data Elements referring to ''company, name, phone, fax, e-mail'' for either Customers or Sellers shall default to the Contact Information maintained for that User's Company.

4.2.9 Representation of Time

4.2.9.1 General

It is critical that all Users of OASIS have a clear and unambiguous representation of time associated with all information transferred to/from OASIS. For this reason, all Data Elements associated with time in OASIS shall represent

''wall clock'' times, which are NOT to be confused with other common industry conventions such as ''hour ending.'' For the convenience of the User community, OASIS nodes shall be allowed to accept the input and display of ''time'' in any acceptable form provided such non-standard representations are CLEARLY labeled on the associated HTML screens. Alternate representations of time in CSV formatted messages shall not be allowed.

The following rules shall be implemented in OASIS for the representation of time on User entries (Query and Input) and output (Response) Templates.

4.2.9.2 Input Time

All time related Data elements associated with either the Input or Query of Input/Response or Query/Response OASIS Templates shall be validated according the following rules. If the time zone associated with a time Data Element is associated with either Universal Time (UT) or a ''standard'' time zone (e.g., ES, CS, etc.), OASIS shall accept and apply a fixed hour offset form Universal Time year-round. If the time zone associated with a time Data Element is specified with a ''daylight savings'' time zone (e.g. ED, CD, etc.), OASIS shall verify that daylight savings time is in effect of the date/time specified.

If daylight savings time (as specified by the time from 2:00 am on the first Sunday of October) is not in effect, the Users input shall be rejected with an error response. If daylight savings time is in effect, the Users input shall be accepted and the appropriate hours offset from Universal Time shall be applied by OASIS for conversion to all other time zones. The input of start/stop times fro transactions spanning the crossover day between standard and daylight (and vices versa) times must be made either entirely in standard time (valid year-round), or in two different time zones (xS/xD or xD/xS) for the start and stop times, depending on the time of year.

4.2.9.3 Output (Response) Time

The OASIS shall return a shall return all time Data Elements in the response to Input/Response or Query/Response OASIS Templates based on either the User specified RETURN__TZ header Query Variable or an appropriate OASIS specific default. OASIS shall interpret RETURN__TZ to specify:

a. The base time zone for conversion of all time Data Elements (e.g. Eastern, Pacific, etc.)

b. Whether daylight savings time is recognized. For example, a RETURN__TZ=ES would return all time Data Elements in Eastern Standard Time year-round. However, a RETURN__TZ=ED would direct OASIS to return all time Data Elements in Eastern Standard Time (ES) when daylight savings time is not in effect, and then return all time Data Elements in Eastern Daylight Time (ED) when daylight time is in effect.

4.2.10 Transaction Process

4.2.10.1 Purchase Transactions

Customers shall purchase services from the Seller using the following steps (see Exhibit 4–1);

a. The Templates (transrequest and ancrequest) shall be used by a Customer to enter a request for specific transmission services from a specific Seller. The Customer may enter a BID__PRICE which is different from the OFFER__PRICE in order to try to negotiate a lower price. The OASIS sets the initial STATUS of the request to QUEUED. The Customer may set the STATUS__NOTIFICATION to indicate that the OASIS must notify the Customer on any change of STATUS of transstatus (see Dynamic Notification). Prior to or commensurate with a Seller's setting of a preconfirmed reservation request's STATUS to ACCEPTED (and by implication CONFIRMED), the Seller must set OFFER__PRICE equal to the value of BID__PRICE as established by the Customer on submission of the request.

b. The Templates (transstatus and ancstatus) shall be used by Customers and Sellers to monitor the status of their transactions in progress. These Templates shall also be used by any Users to review the status of any transactions. The NEGOTIATED__PRICE__ZFLAG data element is set when the Seller agrees to a BID__PRICE (by setting OFFER__PRICE equal to BID__PRICE that is different from the previously posted price. It will show ''higher'' when OFFER__PRICE is higher than the posted price, and ''lower''when the OFFER__PRICE is lower than the posted price.

c. The Templates (transsell and ancsell) shall be used by both to set a new value into STATUS and to negotiate a price by entering a new OFFER__PRICE which is different from the BID__PRICE entered by the Customer in the transrequest Template (if it was not PRECONFIRMED). During these negotiations, a Reseller shall formally indicate the approval or disapproval of a transaction and indicate which rights from prior confirmed reservations are to be reassigned. A Primary Provider may, but it not required, to enter transaction approval or disapproval using this Template. The valid STATUS values which may be set by a Seller are: RECEIVED, STUDY, OFFER, ACCEPTED, REFUSED, DISPLACED, ANNULLED, or RETRACTED.

d. The Customer shall use the transstatus and ancstatus Templates to view the Seller's new offer price and/or approval/disapproval decision.

e. After receiving notification of the transaction's STATUS being set to ''OFFER'' by the Seller the Templates (transcust and anccust) shall be used by the Customer to modify the BID__PRICE and set the STATUS to REBID. After negotiations are complete (STATUS set to ''ACCEPTED'' by the Seller), the Customer shall formally enter the confirmation or withdrawal of the offer to purchase services for the OFFER__PRICE shown in the transstatus Template. The valid STATUS values which a Customer may set are: REBID, CONFIRMED, or WITHDRAWN.

f. The Seller shall use the transstatus (ancstatus) Template to view the Customer's new bid price and/or confirmation/withdrawal decision, again responding through transsell or ancsell if necessary. If the Seller offers to sell a service at an OFFER__PRICE less than the posted in the transoffering (ancoffering) Template, the transoffering (ancoffering) Template must be updated to reflect the new OFFER__PRICE.

g. For deals consummated off the OASIS by a Seller, after the Customer has accepted the offering, the Templates (transassign and ancassign) may be used by the Seller to notify the Primary Provider of the transfer of rights to the Customer. Continuation records may be used to indicate the reassigning of rights for a ''profile'' of different assignments and different capacities over different time periods.

h. The source of all user and seller contact information shall be the User registration process. Therefore, it shall not be input as part of uploads, but shall be provided as part of all transaction downloads.

i. OASIS shall accept a seller initiated change in STATUS to ACCEPTED only when OFFER__PRICE matches BID__PRICE (i.e., seller must set OFFER__PRICE equal to BID__PRICE prior to or coincident with setting STATUS to accepted)

j. OASIS shall accept a customer initiated change in STATUS to CONFIRMED only when BID__PRICE matches OFFER__PRICE (i.e. customer must set BID__PRICE equal to OFFER__PRICE prior to or coincident with setting STATUS to confirmed).

4.2.10.2 Status Values

The possible STATUS values are:

QUEUED=initial status assigned by TSIP on receipt of ''customer services purchase request''

RECEIVED=assigned by TP to acknowledge QUEUED requests and indicate the service request is being evaluated, including for completing the required ancillary services

STUDY=assigned by TP to indicate some level of study is required or being performed to evaluate service request

OFFER=assigned by TP to indicate that a new OFFER__PRICE is being proposed

REBID=assigned by TC to indicate that a new BID__PRICE is being proposed

ACCEPTED=assigned by TP to indicate service request at the designed OFFER__PRICE has been approved/accepted. Of the reservation request was submitted PRECONFIRMED, OASIS shall immediately set the reservation status to CONFIRMED. Depending upon the type of ancillary services required, the Seller may or may not require all ancillary service reservation to be completed before accepting a request.

REFUSED=assigned by TP to indicate service request has been denied, SELLER__COMMENTS should be used to communicate reason for denial of service

CONFIRMED=assigned by TC in response to TP posting ''ACCEPTED'' status, to confirm service. Once a request has been ''CONFIRMED'', a transmission service reservation exists

WITHDRAWN=assigned by TC any point in request evaluation to withdraw the request from any further action

DISPLAY=assigned by TP when a ''CONFIRMED'' reservation from a TC is displaced by a longer term request and the TC has exercised right of first refusal (i.e. refused to match terms of new request)

ANNULLED=assigned by TP when, by mutual agreement with the TC, a confirmed reservation is to be voided

RETRACTED=assigned by TP when the TC fails to confirm or withdraw the request within the required time period

BILLING CODE 6717–01–M

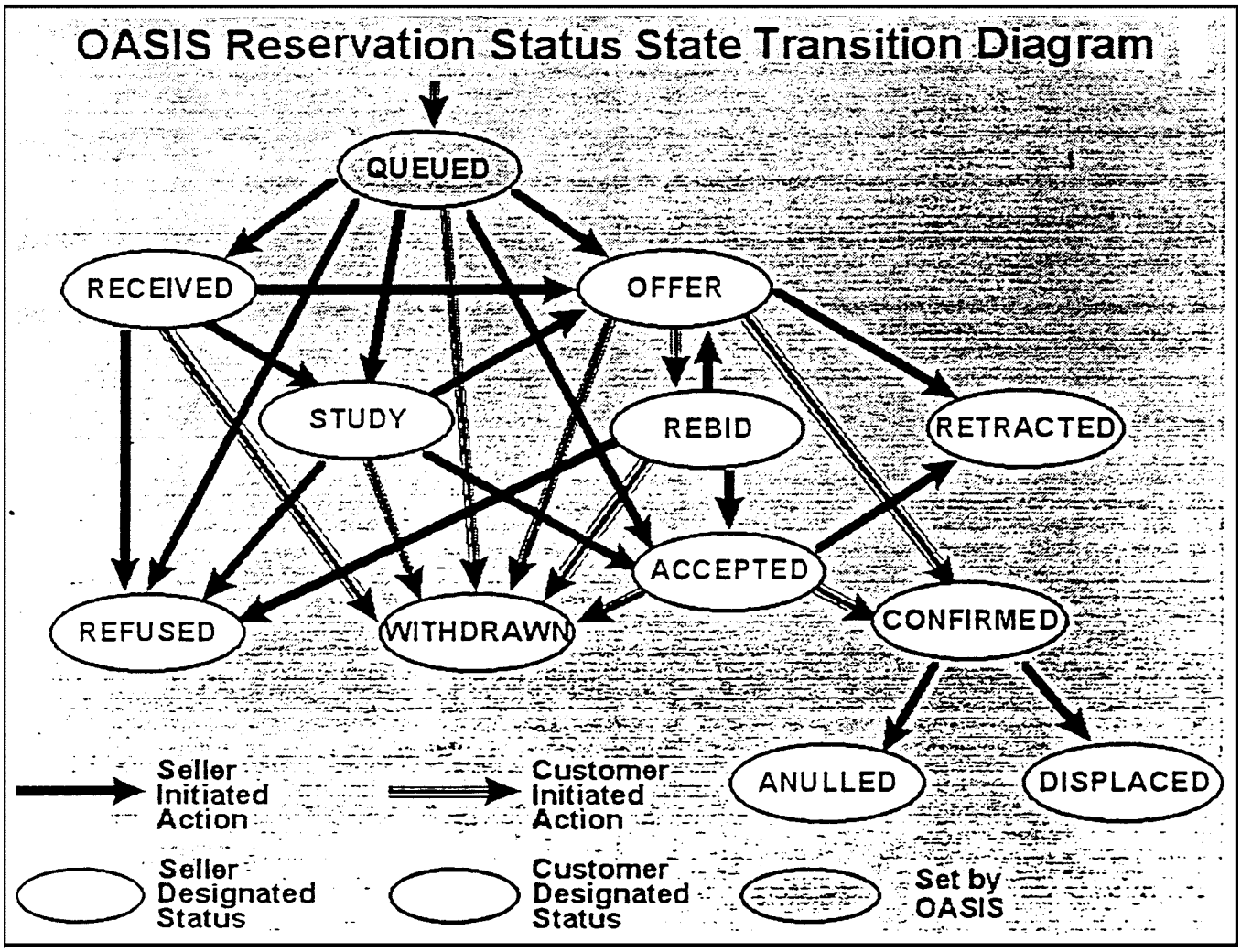

Exhibit 4-1 - State Diagram of Purchase Transactions

BILLING CODE 6716–01–C

4.2.10.3 Nynamic Notification

Customers may specify the delivery of dynamic notification messages on each change in STATUS of an ancillary or transmission service reservation. OASIS shall support the delivery of dynamic notification messages through either the HTTP protocol or by electronic mail. The selection of which mechanism is used and the contents of the messages delivered to the client program or e-mail address is defined by the content of the STATUS__NOTIFICATION data element as described in the next subsections.

Regardless of whether this dynamic notification method is used or not, it shall still remain the User's responsibility to get the desired information, possibly through the use of a periodic ''integrity request''. OASIS nodes shall not be obligated or liable to guarantee delivery/receipt of messages via the STATUS__NOTIFICATION mechanism other than on a ''best effort'' basis.

As an extension of the Company registration information of the host, domain and port identifies for dynamic notification of changes in the Customer's purchase requests, a field should be added to the Company's registration information that would define/identify how notification would be delivered to that Company should a transmission or ancillary purchase request be directed to that Company as a Seller of a transmission or ancillary service. The pertinent information would be either a full HTTP protocol URL defining the protocol, host name, port, path, resource, etc. information or a ''mailto:'' URL with the appropriate mailbox address string. On receipt of any purchase request directed to that Company as SELLER via either the ''transrequest'' or ''ancrequest'' templates, or on submission of any change in request STATUS to that Company as SELLER via either the ''transcust'' or anccust'' templates, a notification message formatted as documented for the delivery of notification to the Customer, shall be formatted and directed to the Seller.

4.2.10.3.1 HTTP Notification

OASIS shall deliver dynamic notification to a client system based on HTTP URL information supplied in part by the STATUS NOTIFICATION data element and by information supplied as part of the Customer's Company registration information. HTTP URL's are formed by the concatenation of a protocol field (i.e., http:), a domain name (e.g., // www.tsin.com), a port designation (e.g., :80), and resource location information.

The STATUS__NOTIFICATION data element shall contain the protocol field ''http:'', which designates the notification method/protocol to be used, followed by all resource location information required; the target domain name and port designations shall be inserted into the notification URL based on the Customer's Company registration information. The resource location information may include directory information, cgi script identifiers and URL encoded query string name/value pairs as required by the Customer's application. OASIS performs no processing on the resource location information other than to include it verbatim along with the protocol, domain name and port information when forming the URI that will be used to deliver the HTTP protocol notification message.

For example, Company XYZ has established the domain name and port designations of ''//oasistc.xyz.com:80'' as part of their registration information.

When a transmission reservation is submitted by one of Company XYZ's users (the Customer), and includes a STATUS__NOTIFICATION data element with the value of ''http:/cgi-bin/status? DEAL__REF=8&REQUEST__REF=173'', OASIS shall deliver and HTTP notification message using the URL: http://oasistic.xyz.com:80/cgi-bin/status? DEAL__REF=8&REQUEST__REF=173

If the STATUS__NOTIFICATION field contained only the ''http:'' protocol designation, the notifcation message would be deliverd using the URL: http://oasistc.xyz.com:80

The contents of the HTTP protocol notification message delivered by OASIS shall consist of the complete URL created by combining fields from the STATUS__NOTIFICATION data element and Company registration information as part of an HTTP GET method request. In addition to the GET method HTTP header record, OASIS shall also append the CSV formatted output of the transstatus template information for that particular reservation using the standard Content-type: text/x-oasis-csv and appropriate Content-length: HTTP header record. OASIS shall use a Primary Provider specific default value for RETURN__TZ in formulating the transstatus response information.

Continuing with the previous example, the important records in the HTTP notification message that would be delivered to Company XYZ for the transmission reservation request submitted to Primary Provider ABC and give an ASSIGNMENT__REF of 245 would be,

GET http://oasistc.xyz.com:80chi-bin/status? DEAL__REF=8&REQUEST__REF=173 HTTP/1.0
Content-type: text/x-oasis-csv
Content-length: <byte count of remainder of message>
REQUEST__STATUS=200
TIME__STAMP=<appropriate value>
VERSION=1.2
TEMPLATE=transstatus
OUTPUT__FORMAT=DATA
PRIMARY__PROVIDER__CODE=ABC
PRIMARY__PROVIDER__DUNS=123456789
RETURN__TZ=<appropriate value for ABC>
DATA__ROWS=1
COLUMN__HEADERS=CONTINUATION__FLAG, ASSIGNMENT__REF, . . .
N, 245, . . .

In the event an error is encountered delivering the HTTP notification message to the target URL as indicated by a failure of the target system to respond, or return of HTTP response status of 408, 500, 503, and 504, OASIS shall retry up to two more times, once every 5 minutes.

4.2.10.3.2 E-mail Notification

OASIS shall deliver dynamic notification to an e-mail address based to Mailto: URL information specified in the STATUS__NOTIFICATION data element. Mailto: URL's consist of the ''mailto:'' protocol identifier and an Internet mail

address to which the notification message should be sent. The STATUS__NOTIFICATION data element shall contain the protocol field ''mailto:'', which designates the notification method/protocol to be used, followed by an Internet mail address in conformance with RFC 822. OASIS shall send an e-mail message to the Internet mail address containing the following information: ''To:'' set to the mail address from the STATUS__NOTIFICATION data element, ''From:'' set to an appropriate mail address of the OASIS node, ''Subject:'' shall be the transstatus template name followed by the value of the ASSIGNMENT__REF data element and the current value for the STATUS data element associated with the reservation (e.g., ''Subject: transstatus 245 ACCEPTED''), and the body of the message shall contain the CSV formatted output of the transstatus template information for that particular reservation. OASIS shall use a Primary Provider specific default value for RETURN__TZ in formulating the transstatus response information.

4.2.11 Reference Identifiers

The TSIP shall assign a unique reference identifier, ASSIGNMENT__REF, for each Customer request to purchase capacity or services. The value of ASSIGNMENT__REF may be used to imply the order in which the request was received by the TSIP. This identifier will be used to track the request through various stages, and will be kept with the service through out its life. Whenever the service is resold, a new ASSIGNMENT__REF number is assigned, but previous ASSIGNMENT__REF numbers are also kept so that a chain of all transactions related to the service can be maintained.

The TSIP shall assign a unique reference identifier. POSTING__REF, to each Seller's offerings of service for sale or other information (messages) posted on OASIS. This identifier shall be referenced by the Seller in any/all subsequent template submissions which would result in a modification to or deletion of that specific offering or message. Optionally, Customers may also refer to this POSTING__REF in their subsequent purchase requests to aid in identifying the specific offering associated with the purchase request.

Sellers may aggregate portions of several previous transmission service reservations to create a new offering to be posted on OASIS. When all or a portion of such offerings are sold, the Seller (original Customer) is obligated to notify the Primary Provider of the sale/assignment by inserting appropriate reassignment information on OASIS (via the transsell or transassign templates) or by some other approved method. This reassignment information consists of the ASSIGNMENT__REF value assigned to the original reservation(s) and the time interval and capacity amount(s) being reassigned to the new reservation. These values are retained in the REASSIGNED__REF, REASSIGNED__START__TIME, REASSIGNED__STOP__TIME, and REASSIGNED__CAPACITY data elements.

Sellers may identify their service offerings received from Customers through the Seller supplied value specified for the SALE__REF data element.

Customers may track their purchase requests through the Customer supplied values specified for the DEAL__REF and REQUEST__REF data elements. Customers may also use POSTING__REF and SALE__REF in their purchase requests to refer back to posted offerings.

4.2.12 Linking of Ancillary Services to Transmission Services

The requirements related to ancillary services are shown in transoffering (and updated using transupdate) using the ANC__SVC__REQ data element containing the following permitted values:

SC:x; RV:x; RF:x; EI:x; SP:x; SU:x;

Where SC, RV, RF, EI, SP and SU are the ancillary services 1 through 6 described in the Proforma Tariff.

- SC-Scheduling, system Control and dispatch
- RV-Reactive supply and Voltage control
- RF-Regulation and Frequency response
- EI-Energy Imbalance
- SP-Spinning reserve
- SU-Supplemental reserve

and where x-(M,R,O,U) means one of the following:

- *M*andatory, which implies that the Primary Provider must provide the ancillary service
- *R*equired, which implies that the ancillary service is required, but not necessarily from the Primary Provider
- *O*ptional, which implies that the ancillary service is not necessarily required, but could be provided
- *U*nknown, which implies that the requirements for the ancillary service are not known at this time

Ancillary services may be requested by a User from the Provider at the same time as transmission services are requested via the transrequest template, by entering the special codes into ANC__SVC__LINK to represent the Proforma ancillary services 1 through 6 (or more) as follows:

SC:(AA); RV:(AA); RF:(AA EI: (AA[:xxx[:yyy[:nnn]]]);
SP:(AA[:xxx[:yyy[:nnn]]]); SU:(AA[:xxx[:yyy[:nnn]]]);
Registered :(AA[:xxx[:yyy[:nnn]]])

Where AA is the appropriate PRIMARY__PROVIDER__CODE, SELLER__CODE, or CUSTOMER__CODE, and represents the company providing the ancillary services. ''AA'' may be unspecified for ''xxx'' type identical to ''FT'', in which case the ':' character must be present and precede the ''FT'' type.

If multiple ''AA'' terms are necessary, then each ''AA'' grouping will be enclosed within parenthesis, with the overall group subordinate to the ANC__SVC__TYPE specified within parenthesis.

And where xxx represents either:

—''FT'' to indicate that the Customer will determine ancillary services at a future time, or
—''SP'' to indicate that the Customer will self-provide the ancillary services, or
—''RQ'' to indicate that the Customer is asking the OASIS to initiate the process for making an ancillary services reservation with the indicated Provider or Seller on behalf of the Customer. The Customer must then continue

the reservation process with the Provider or Seller. If the transmission services request is for preconfirmed service, then the ancillary services shall also be preconfirmed, or

—''AR'' to indicate an assignment reference number sequence follows.

The terms ''yyy'' and ''nnn'' are subordinate to the xxx type of ''AR''. yyy represents the ancillary services reservation number (ASSIGNMENT_REF) and nnn represents the capacity of the reserved ancillary services. Square brackets are used to indicated optional elements and are not used in the actual linkage itself. Specifically, the :yyy is applicable to only the ''ARA'' term and the :nnn may optionally be left off if the capacity of ancillary services is the same as for the transmission services, and optionally multiple ancillary reservations may be indicated by additional (xx[:yyy[:nnn]]) enclosed within parenthesis. If no capacity amount is indicated, the required capacity is assumed to come from the ancillary reservations in the order indicated in the codes, on an ''as-needed'' basis.

Examples

Example 1

Assume ancillary services SC and RV are mandatory from the TP, whose code is ''TPEL'', and ancillary services RF, EI, SP and SU are required, but will be defined at a future time.

''SC: (TPEL:RQ); RV: (TPEL:RQ); RF:(:FT); EI:(:FT); SP:(:FT); SU:(:FT)''

Example 2

Assume ancillary services SC and RV are mandatory from the TP, whose code is ''TPEL'', and RF, EI, SP and SU are self-supplied. The customer code is ''CPSE''

''SC: (TPEL:RQ); (TPEL:RQ); RF:(CPSE:SP); EI:(CPSE:SP); SP:(CPSE:SP); SU:(CPSE:SP)''

Example 3

Assume ancillary services SC and RV are mandatory from the TP, whose code is ''TPEL'', and ancillary services RF, EI, SP and SU were purchased via a prior OASIS reservation from seller ''SANC'' whose reservation number was ''39843''. There is sufficient capacity within the Ancillary reservation to handle this Transmission reservation.

''SE:(TPEL:RQ); RV:(TPEL:RQ); RF:(SANC:AR:39843); EI:(SANC:AR:39843) SP:(SANC:AR:39843); SU:(SANC:AR:39843)''

Example 4

Assume ancillary services SC and RV are mandatory from the TP, whose code is ''TPEL'', and ancillary services RF, EI, SP and SU were purchased via prior OASIS reservations from sellers ''SANC'' and ''TANC'', whose reservation numbers where ''8763'' and 9824'' respectively. There is not sufficient capacity within the Ancillary reservation from seller ''SANC'' to handle this Transmission reservation. In this case the OASIS reservation number 8763 will be depleted for the time frame specified within the transmission reservation and the remaining required amount will come from reservation number ''9824''.

''SC:(TPEL:RQ); RV:(TPEL:RQ); RF:((SANC:AR:8763)(TANC:AR:9824)); EI:((SANC:AR:8763)(TANC:AR:9824)); SP:((SANC:AR:8763)(TANC:AR:9824)); SU:((SANC:AR:8763)(TANC:AR:9824))''

Example 5

Assume a transmission reservation in the amount of 100 mw/hour for a period of one day is made. Ancillary services SC and RV are mandatory from the TP, whose code is ''TPEL'', and ancillary services RF, EI, SP and SU were purchased via prior OASIS reservations from sellers ''SANCS'' and ''TANC'', whose reservation numbers where ''8763'' and 9824'' respectively. There is sufficient capacity within the Ancillary reservation from seller ''SANC'' to handle this Transmission reservation, however the purchaser wishes to use only ''40 mw's'' for the time frame specified within the transmission reservation and the remaining required amount will come from reservation number ''9824''.

''SC:(TPEL:RQ); RV:(TPEL:RQ); RF:((SANC:AR:8763:40)(TANC:AR:9824)); EI:((SANC:AR:8763:40)(TANC:AR:9824)); SP:((SANC:AR:8763:40)(TANC:AR:9824)); SU:((SANC:AR:8763:40)(TANC:AR:9824))''

4.3 Template Descriptions

The following OASIS Templates define the Data Elements in fixed number and sequence which must be provided for all data transfers to and from the OASIS modes. The definitions of the data elements are listed in the Data Element Dictionary in Appendix A.

TSIPs must provide a more detailed supplemental definition of the list of Sellers, Paths, Point of Receipt (POR), Point of Delivery (POD), Capacity Types, Ancillary Services Types and Templates on-line, clarifying how the terms are being used (see LIST Template). If POR and POD are not used, then Path Name must include directionality.

Many of the Templates represent query-response interactions between the User and the OASIS Node. These interactions are indicated by the ''Query'' and ''Response'' section respectively of each Template. Some, as noted in their descriptions, are Input information, sent from the User to the OASIS Node. The Response is generally a mirror of the Input, although in some Templates, the TSIP must add some information.

4.3.1 Template Summary

The following table provides a summary of the process areas, and Templates to be used by Users to query information that will be downloaded or to upload information to the Primary Providers. These processes define the functions that must be supported by an OASIS Node.

Process area	Process name	Template(s)
4.3.2 Query/Response of Posted Services Being Offered	Query/Response Transmission Capacity Offerings	transoffering
	Query/Response Ancillary Service Offerings	ancoffering
4.3.3 Query/Response of Services Information	Query/Response Transmission Services	transserv
	Query/Response Ancillary Services	ancser
4.3.4 Query/Response of Schedules and Curtailments	Query/Response Transmission Schedules	schedule
	Query/Response Curtailments	curtail
4.3.5 Query/Response of Lists of Information	Query/Response List of Sellers, Paths, PORs, PODs, Capacity Types, Ancillary Service Types, Templates.	list
4.3.6 Query/Response of Audit Log	Query/Response Audit Log	auditlog
4.3.7 Purchase Transmission Services	Request Purchase of Transmission Services (Input)	transrequest
	Query/Response Status of Transmission Service Request	transstatus
	Seller Approves Purchase (Input)	transsell
	Customer Confirm/Withdraw Purchase of Transmission Service (Input).	transcust
	Alternate POD/POR	transalt
	Seller Reassign Rights (Input)	transassign
4.3.8 Seller Posting of Transmission Service	Seller Post Transmission Service for Sale (Input)	transpost
	Seller Modify (Remove) Transmission Service for Sale (Input).	transupdate
4.3.9 Purchase of Ancillary Service	Request Purchase of Ancillary Service (Input)	ancrequest
	Query/Response Status of Ancillary Service Request	ancstatus
	Seller Approves Purchase of Ancillary Service (Input)	ancsell
	Customer Accept/Withdraw Purchase of Ancillary Service (Input).	anccust
4.3.10 Seller Post Ancillary Service	Seller Post Ancillary Service (Input)	ancpost
	Seller Modify (Remove) Ancillary Service for Sale (Input)	ancupdate
4.3.11 Informal Messages	Post Want Ads (Input)	messagepost
	Query/Response Want Ads	message
	Delete Want Ad (Input)	messagedelete
	Personnel Transfers	personnel
	Discretion	discretion
	Personnel Transfers	personnel
	Standards of Conduct	stdconduct

4.3.2 Query/Response of Posted Services Being Offered

The following Templates define the information to be posted on services offered for sale. All discounts for service negotiated by a Customer and Primary Provider (as Seller) at a price less than the currently posted offering price shall be posted on OASIS in such a manner as to be viewed using these Templates. All secondary market and/or third-party posting and Primary Provider offerings for like services shall also be viewed using these templates.

The Query must start with the standard header Query Variable Data Elements, listed in Section 4.2.6.2, and may include any valid combination of the remaining Query Variables, shown below in the Templates. START__TIME and STOP__TIME is the requested time interval for the Response to show all offerings which intersect that interval (see Section 4.2.6.6). TIME__OF__LAST__UPDATE can be used to specify all services updated since a specific point in time.

Query variable listed with an asterisk (*) can be at last 4 multiple instances defined by the user in making the query.

In the Response, OFFER__START__TIME and OFFER__STOP__TIME indicate the ''request time window'' within which a customer must request a service in order to get the posted OFFER__PRICE. START__TIME and STOP__TIME indicate the time frame that the service is being offered for.

The SERVICE__DESCRIPTION data element shall define any attributes and/or special terms and conditions applicable to the offering that are not listed under the standard SERVICE__DESCRIPTION associated with the product definition supplied in the *transserv* or *ancserv* templates.

SERVICE__DESCRIPTION shall be null if there are no unique attributes or terms associated with the offering.

4.3.2.1 Transmission Capacity Offerings Available for Purchase (transoffering)

Transmission Services Offerings Available for Purchase (transoffering) is used to offer transmission services that are posted for sale by the Primary Provider or Resellers. At a minimum this Template must be used to post TTC and each increment and type of service by applicable regulations and the Primary Provider's tariffs.

This Template must include, for each posted path, the Primary Provider's TTC, firm ATC and non-firm ATC, as required by FERC orders 888 and 889 (plus revisions) and/or if provided in the Primary Provider's tariff. Additional transmission services may be offered with the same Template.

The POSTING__REF is set by the TSIP when an offering is posted and can be used in *transrequests* to refer to a particular offering.

A User may query information about services available from all sellers for the time frame specified by the SERVICE__INCREMENT data element, namely, hourly, daily, weekly, monthly, or yearly.

Template: transoffering

1. Query

PATH__NAME*

SELLER__CODE*
SELLER__DUNS*
POINT__OF__RECEIPT*
POINT__OF__DELIVERY*
SERVICE__INCREMENT*
TS__CLASS*
TS__TYPE*
TS__PERIOD*
START__TIME (of transmission services)
STOP__TIME (of transmission services)
POSTING__REF
TIME__OF__LAST__UPDATE

2. Response

The response is one or more records showing the requested service information. Note that the Customer will receive as a series of records spanning all the SELLER__CODEs, PATH__NAMEs__PORs, PODs, TS__xxx, and the START__TIME/STOP__TIME specified in the query. The SALE__REF is a value provided by the SELLER to identify the transmission service product being sold. The ANC__SVC__REQ indicates all ancillary services required for the specified transmission services. All Template elements are defined in the Data Element Dictionary.

TIME__OF__LAST__UPDATE
SELLER__CODE
SELLER__DUNS
PATH__NAME
POINT__OF__RECEIPT
POINT__OF__DELIVERY
INTERFACE__TYPE
OFFER__START__TIME
OFFER__STOP__TIME
START__TIME
STOP__TIME
CAPACITY
SERVICE__INCREMENT
TS__CLASS
TS__TYPE
TS__PERIOD
TS__WINDOW
TS__SUBCLASS
ANC__SVC__REQ
SALE__REF
POSTING__REF
CEILING__PRICE
OFFER__PRICE
PRICE__UNITS
SERVICE__DESCRIPTION (if null, then look at *transserv*)
NERC__CURTAILMENT__PRIORITY
OTHER__CURTAIMENT__PRIORITY
SELLER__NAME
SELLER__PHONE
SELLER__FAX
SELLER__EMAIL
SELLER__COMMENTS

4.3.2.2 Ancillary Services Available for Purchase (ancoffering)

Ancillary Services Available for Purchase (ancoffering) is used to provide information regarding the ancillary services that are available for sale by all sellers (both Primary Provider and Third Party Sellers).

Template: ancoffering

1. Query

SELLER__CODE
SELLER__DUNS
CONTROL__AREA
SERVICE__INCREMENT
ANC__SERVICE__TYPE
START__TIME
STOP__TIME
POSTING__REF
TIME__OF__LAST__UPDATE

2. Response

TIME__OF__LAST__UPDATE

SELLER__CODE
SELLER__DUNS
CONTROL__AREA
OFFER__START__TIME
OFFER__STOP__TIME
START__TIME
STOP__TIME
CAPACITY
SERVICE__INCREMENT
ANCILLARY__SERVICE__TYPE
SALE__REF
POSTING__REF
CEILING__PRICE
OFFER__PRICE
PRICE__UNITS
SERVICE__DESCRIPTION (if blank, then look at ancserv)
SELLER__NAME
SELLER__PHONE
SELLER__FAX
SELLER__EMAIL
SELLER__COMMENTS

4.3.3 Query/Response of Services Information

4.3.3.1 Transmission Services (transserv)

Transmission Services (transserv) is used to provide additional information regarding the transmission services SERVICE__INCREMENT, TS__CLASS, TS__TYPE, TS__PERIOD, TS__SUBCLASS, TS__WINDOW, NERC__CURTAIMENT__PRIORITY, and OTHER__CURTAIMENT__PRIORITY that are available for sale by a Provider in the Templates in Section 4.3.2. This Template is used to summarize Provider tariff information for the convenience of the User. The Provider also sets PRICE__UNITS with this Template.

Template: transserv

1. Query

TIME__OF__LAST__UPDATE

2. Response

TIME__OF__LAST__UPDATE
SERVICE__INCREMENT
TS__CLASS
TS__TYPE
TS__PERIOD
TS__WINDOW
TS__SUBCLASS
CEILING__PRICE
PRICE__UNITS
SERVICE__DESCRIPTION
NERC__CURTAILMENT__PRIORITY
OTHER__CURTAILMENT__PRIORITY
TARIFF__REFERENCE

4.3.3.2 Ancillary Services (ancserv)

Ancillary Services (ancserv) is used to provide additional information regarding the ancillary services that are available for sale by a Provider in the Templates in Section 4.3.2. This Template is used to summarize Provider tariff information for the convenience of the User. The Provider also sets PRICE__UNITS with this Template.

Template: ancserv

1. Query

TIME__OF__LAST__UPDATE

2. Response

TIME__OF__LAST__UPDATE
SERVICE__INCREMENT
ANC__SERVICE__TYPE
CEILING__PRICE
PRICE__UNITS
SERVICE__DESCRIPTION
TARIFF__REFERENCE

4.3.4 Query/Response of Schedules and Curtailments

4.3.4.1 Hourly Schedule (schedule)

Hourly Schedule (schedule) is used to show what a Provider's scheduled transmission capacity usage actually was for specific Paths. All the information provided is derived from that in the transmission reservation (see Template transstatus), except CAPACITY__SCHEDULED, which is the amount of the reservation which was scheduled. Posting of the schedules is organized around the transmission reservations, not the energy schedules. This may require the Primary Provider to map schedules back to the reservation. These records would have to be created for all reservations/schedules done off the OASIS during the operations scheduling period.

Template: schedule

1. Query

PATH__NAME*
SELLER__CODE*
SELLER__DUNS*
CUSTOMER__CODE*
CUSTOMER__DUNS*
POINT__OF__RECEIPT*
POINT__OF__DELIVERY*
SERVICE__INCREMENT*
TS__CLASS*
TS__TYPE*
TS__PERIOD*
START__TIME
STOP__TIME
TIME__OF__LAST__UPDATE
ASSIGNMENT__REF

2. Response

TIME__OF__LAST__UPDATE
SELLER__CODE
SELLER__DUNS
PATH__NAME
POINT__OF__RECEIPT
POINT__OF__DELIVERY
CUSTOMER__CODE
CUSTOMER__DUNS
AFFILIATE__FLAG
START__TIME (start time of schedule)
STOP__TIME (stop time of schedule)
CAPACITY (reserved)
CAPACITY__SCHEDULED (total of energy scheduled for this customer for this reservation for this hour)
SERVICE__INCREMENT
TS__CLASS
TS__TYPE
TS__PERIOD
TS__WINDOW
TS__SUBCLASS
NERC__CURTAILMENT__PRIORITY
OTHER__CURTAILMENT__PRIORITY
ASSIGNMENT__REF (Last rights holder)

4.3.4.2 Curtailment/Interruption (curtail)

Curtailment/Interruption (curtail) provides additional information about the actual curtailment of transmission reservations that have been scheduled for energy exchange. All fields are derived from the reservation except the CAPACITY__CURTAILMENT, CURTAILMENT__REASON and CURTAILMENT__OPTIONS. These fields provide information on the reasons for the curtailment, procedures to be followed and options for the Customer, if any, to relieve the curtailment.

Template: curtail

1. Query

PATH__NAME
SELLER__CODE*
SELLER__CODE
CUSTOMER__CODE*
CUSTOMER__DUNS*
POINT__OF__RECEIPT*
POINT__OF__DELIVERY*

SERVICE__INCREMENT*
TS__CLASS*
TS__TYPE*
TS__PERIOD*
START__TIME
STOP__TIME
TIME__OF__LAST__UPDATE
ASSIGNMENT__REF

2. Response

TIME__OF__LAST__UPDATE
SELLER__CODE
SELLER__DUNS
PATH__NAME
POINT__OF__RECEIPT
POINT__OF__DELIVERY
CUSTOMER__CODE
CUSTOMER__DUNS
AFFILIATE__FLAG__START__TIME (Start time of curtailment)
STOP__TIME (Start time of curtailment)
CAPACITY (Capacity reserved)
CAPACITY__SCHEDULED
CAPACITY__CURTAILED
SERVICE__INCREMENT
TS__CLASS
TS__TYPE
TS__PERIOD
TS__WINDOW
TS__SUBCLASS
HERC__CURTAILMENT__PRIORITY
OTHER__CURTAILMENT__PRIORITY
CURTAILMENT__REASON
CURTAILMENT__PROCEDURES
CURTAILMENT__OPTIONS
ASSIGNMENT__REF

4.3.5 Query/Response of Lists of Information

4.3.5.1 List (list)

List (list) is used to provide lists of valid names. The minimum set of lists is LIST, SELLER__CODEs, PATHs, PORs, PODs, SERVICE__INCREMENTs, TS__CLASSes, TS__TYPEs, TS__PERIODs, NERC__CURTAILMENT__PRIORITY, OTHER__CURTAILMENT__PRIORITY, ANCILLARY__SERVICE__TYPEs, CATEGORYs, and TEMPLATEs. These names may be used to query information, post or request services.

Template: list

1. Query

LIST__NAME
TIME__OF__LAST__UPDATE

2. Response

TIME__OF__LAST__UPDATE
LIST__NAME
LIST__ITEM
LIST__ITEM__DESCRIPTION

4.3.6 Query/Response to Obtain the Audit Log

4.3.6.1 Audit Log Information (auditlog)

Audit Log Information (auditlog) is used to provide a means of accessing the required audit information. The TSIP will maintain two types of logs:

a. Log of all changes to posted TS Information, such as CAPACITY. This log will record as a minimum the time of the change, the Template name, the name of the Template data element changed and the old and new values of the Template data element.

b. A complete record of all transaction events, such as those contained in the Templates 4.3.8, 4.3.9 and 4.3.10. For transaction event logs, the response will include: TIME__STAMP, TEMPLATE, ELEMENT__NAME, AND NEW__DATA. In this case the value of OLD__DATA in not applicable.

Template: auditlog

1. Query

START__TIME (search against audit log)

STOP__TIME (search against audit log)

2. Response

ASSIGNMENT__REF or POSTING__REF
TIME__STAMP
TEMPLATE
ELEMENT__NAME (for data elements whose values have changed)
OLD__DATA
NEW__DATA

4.3.7 Purchase Transmission Services

The following Templates shall be used by Customers and Sellers to transact purchases of services.

4.3.7.1 Customer Capacity Purchase Request (transrequest)

The Customer Capacity Purchase Request (Input) (transrequest) is used by the Customer to request the purchase of transmission services. The response simply acknowledges that the Customer's request was received by the OASIS Node. It does not imply that the Seller has received the request. Inputting values into the reference Data Elements is optional.

CUSTOMER__CODE and CUSTOMER__DUNS shall be determined from the registered connection used to input the request.

Supporting ''profiles'' of services, which request different capacities for different time periods within a single request, is at the discretion of the Primary Provider. Continuation records may be used to indicate requests for these service profiles. Only the following fields may be redefined in a continuation record for the transrequest Template: CAPACITY, BID__PRICE, START__TIME, and STOP__TIME.

For requesting transmission services which include multiple paths, only the following fields may be redefined in a continuation record for the transrequest Template: PATH__NAME. Supporting multiple paths is at the discretion of the Provider.

The START__TIME and STOP__TIME indicate the requested period of service.

When the request is received at the OASIS Node, the TSIP assigns a unique ASSIGNMENT__REF value and queues the request with a time stamp. The STATUS for the request is QUEUED.

Specification of a value YES in the PRECONFIRMED field authorizes the TSIP to automatically change the STATUS field in the transstatus Template to CONFIRMED when that request is ACCEPTED by the Seller.

Template: transrequest

1. Input

CONTINUATION__FLAG
SELLER__CODE (Primary or Reseller)
SELLER__DUNS
PATH__NAME
POINT__OF__RECEIPT
POINT____OF__DELIVERY
SOURCE
SINK
CAPACITY
SERVICE__INCREMENT
TS__CLASS
TS__TYPE
TS__PERIOD
TS__SUBCLASS
STATUS__NOTIFICATION
START__TIME
STOP__TIME
BID__PRICE
PRECONFIRMED
ANC__SVC__LINK
POSTING__REF (Optionally set by Customer)
SALE__REF (Optionally set by Customer)
REQUEST__REF (Optionally set by Customer)
DEAL__REF (Optionally set by Customer)
CUSTOMER__COMMENTS

2. Response (acknowledgement)

RECORD__STATUS
CONTINUATION__FLAG
ASSIGNMENT__REF (assigned by TSIP)
SELLER__CODE
SELLER__DUNS
PATH__NAME

POINT__OF__RECEIPT
POINT__OF__DELIVERY
SOURCE
SINK
CAPACITY
SERVICE__INCREMENT
TS__CLASS
TS__TYPE
TS__PERIOD
TS__SUBCLASS
STATUS__NOTIFICATION
START__TIME
STOP__TIME
BID__PRICE
PRECONFIRMED
ANC__SVC__LINK
POSTING__REF
SALE__REF
REQUEST__REF
DEAL__REF
CUSTOMER__COMMENTS
ERROR__MESSAGE

4.3.7.2 Status of Customer Purchase Request (transstatus)

The Status of Customer Purchase Request (transstatus) is provided upon the request of any Customer or Provider to indicate the current status of one or more reservation records. Users may also view any transaction's status. Transmission Providers shall make source and sink information available at the time the request status posting is updated to show that a transmission request is confirmed.

Only the following fields may be redefined in a continuation record for the transstatus response Template: PATH__NAME, CAPACITY, START__TIME, STOP__TIME, REASSIGNED__REF, REASSIGNED__CAPACITY, REASSIGNED__START__TIME, AND REASSIGNED__STOP__TIME.

The AFFILIATE__FLAG will be set by the TSIP to indicate whether or not the Customer is an affiliate of the Primary Provider. The NEGOTIATED__PRICE__FLAG will be set by the TSIP to indicate whether the OFFER__PRICE is higher, lower, or the same as the BID__PRICE.

Template: transstatus

1. Query

SELLER__CODE*
SELLER__DUNS*
SELLER__CODE*
CUSTOMER__DUNS*
PATH__NAME*
POINT__OF__RECEIPT*
POINT__OF__DELIVERY*
SERVICE__INCREMENT*
TS__CLASS*
TS__TYPE*
TS__PERIOD*
STATUS*
START__TIME (Beginning time of service)
STOP__TIME
START__TIME__QUEUED (Beginning time queue)
STOP__TIME__QUEUED
NEGOTIATED__PRICE__FLAG
ASSIGNMENT__REF
REASSIGNED__REF
SALE__REF
REQUEST__REF
DEAL__REF
TIME__OF__LAST__UPDATE

2. Response

CONTINUATION__FLAG
ASSIGNMENT__REF
SELLER__CODE
SELLER__DUNS
CUSTOMER__CODE
CUSTOMER__DUNS

AFFILIATE__FLAG (Set by TSIP)
PATH__NAME
POINT__OF__RECEIPT
POINT__OF__DELIVERY
SOURCE
SINK
CAPACITY (total reservation)
SERVICE__INCREMENT
TS__CLASS
TS__TYPE
TS__PERIOD
TS__WINDOW
TS__SUBCLASS
NERC__CURTAILMENT__PRIORITY
OTHER__CURTAILMENT__PRIORITY
START__TIME
STOP__TIME
CEILING__PRICE
OFFER__PRICE
BID__PRICE
PRECONFIRMED
ANC__SVC__LINK
ANC__SVC__REQ
ALTERNATE__SERVICE__FLAG
POSTING__REF
SALE__REF
REQUEST__REF
DEAL__REF
NEGOTIATED__PRICE__FLAG (''L'' if Seller accepted Price is lower than OFFER__PRICE in transoffering Template; ''H'' if higher; otherwise blank)
STATUS=RECEIVED, QUEUED, STUDY, REBID, OFFER, ACCEPTED, REFUSED, CONFIRMED, WITHDRAWN, DISPLACED, ANNULLED, RETRACTED
STATUS__NOTIFICATION
STATUS__COMMENTS
TIME__QUEUED
RESPONSE__TIME__LIMIT
TIME__OF__LAST__UPDATE
PRIMARY__PROVIDER__COMMENTS
SELLER__COMMENTS
CUSTOMER__COMMENTS
SELLER__NAME
SELLER__PHONE
SELLER__FAX
SELLER__EMAIL
CUSTOMER__NAME
CUSTOMER__PHONE
CUSTOMER__FAX
CUSTOMER__EMAIL
REASSIGNED__CAPACITY (Capacity from each previous transaction)
REASSIGNED__START__TIME
REASSIGNED__STOP__TIME

4.3.8.3 Seller Approval of Purchase (transsell)

Seller Approval of Purchase (Input) (transsell) is input by a Seller to modify the status and queue of a request by a Customer.

If preconfirmed then Seller can only change values of data elements, STATUS, STATUS__COMMENTS, SELLER__COMMENTS, REASSIGNED__REF, NEGOTIATED__PRICE__FLAG, ANC__SRV__REQ, REASSIGNED__START__TIME, REASSIGNED__STOP__TIME, and REASSIGNED__CAPACITY. If not preconfirmed, then the Seller can also change OFFER__PRICE.

Only the following fields may be redefined in a continuation record for the transsell Template: REASSIGNED__CAPACITY, OFFER__PRICE, REASSIGNED__REF, REASSIGNED__START__TIME, and REASSIGNED__STOP__TIME.

SELLER__CODE and SELLER__DUNS shall be determined from the registered connection used to input the request.

The Seller may accept a reservation only when the BID__PRICE and the OFFER__PRICE are the same.

Template: transsell

1. Input

CONTINUATION__FLAG

ASSIGNMENT__REF (Required)
OFFER__PRICE
STATUS= RECEIVED, STUDY, OFFER, ACCEPTED, REFUSED, ANNULLED, RETRACTED, DISPLACED
STATUS__COMMENTS
OTHER__CURTAILMENT__PRIORITY (optional)
ANC__SVC__REQ
NEGOTIATED__PRICE__FLAG
SELLER__COMMENTS
RESPONSE__TIME__LIMIT
REASSIGNED__REF
REASSIGNED__CAPACITY (Previous capacity to be reassigned)
REASSIGNED__START__TIME
REASSIGNED__STOP__TIME

2. Response

RECORD__STATUS
CONTINUATION__FLAG
ASSIGNMENT__REF
OFFER__PRICE
STATUS= RECEIVED, STUDY, OFFER, ACCEPTED, REFUSED, ANNULLED, RETRACTED, DISPLACED
STATUS__COMMENTS
OTHER__CURTAILMENT__PRIORITY
ANC__SVC__REQ
NEGOTIATED__PRICE__FLAG
SELLER__COMMENTS
RESPONSE__TIME__LIMIT
REASSIGNED__REF
REASSIGNED__CAPACITY (Previous capacity to be reassigned)
REASSIGNED__START__TIME
REASSIGNED__STOP__TIME
ERROR__MESSAGE

4.3.7.4 Customer Confirmation of Purchase (Input) (transcust)

Customer Confirmation of Purchase (Input) (transcust) is input by the Customer to state his agreement or withdrawal of a purchase after the Seller has indicated that the purchase request is approved. Only the BID__PRICE, STATUS, STATUS__COMMENTS, ANC__SVC__LINK, and CUSTOMER__COMMENTS data elements can be modified in this Template.

CUSTOMER__CODE and CUSTOMER__DUNS shall be determined from the registered connection used to input the request.

The Customer must change the BID__PRICE to be equal to the OFFER__PRICE for each record before the STATUS can be set to CONFIRMED.

Template: transcust

1. Input

CONTINUATION__FLAG
ASSIGNMENT__REF (Required)
REQUEST__REF
DEAL__REF
BID__PRICE
STATUS= REBID, CONFIRMED, WITHDRAWN
STATUS__COMMENTS
ANC__SVC__LINK
STATUS__NOTIFICATION If left blank, then original URL from the transrequest will be used
CUSTOMER__COMMENTS

2. Response

RECORD__STATUS
CONTINUATION__FLAG
ASSIGNMENT__REF
REQUEST__REF
DEAL__REF
BID__PRICE
STATUS= REBID, CONFIRMED, WITHDRAWN
STATUS__COMMENTS
ANC__SVC__LINK
STATUS__NOTIFICATION
CUSTOMER__COMMENTS
ERROR__MESSAGE

4.3.7.5 Alternate Point of Receipt/Delivery (transalt)

Alternate Point of Delivery (transalt). The Customer may submit a request to use alternate points of receipt/delivery for an existing confirmed reservation, if allowed by applicable tariffs and service agreements. The assignment reference value associated with the prior confirmed reservation must be provided in the REASSIGNED__REF data element along with the alternate points of receipt/delivery. The request may be submitted as PRECONFIRMED. Requests submitted by the transalt template shall be handled by OASIS identically to reservations submitted using the transrequest template.

CUSTOMER__CODE and CUSTOMER__DUNS shall be determined from the registered connection used to input the request.

REASSIGNED__REF contains the ASSIGNMENT__REF of the original, confirmed reservation that is being designated to the alternate points of delivery/receipt. The Template allows for only one REASSIGNED__REF Field. Therefore, if multiple, original reservations are being designated, a separate transalt Template must be submitted associated with each original reservation. There is no restriction that multiple submissions of the transalt Template may all refer back to the same, original reservation (i.e., may have the same REASSIGNED__REF).

Demand profiles associated with the designation of alternate POD/POR may be submitted by additional records designating ''Y'' for CONTINUATION__FLAG, and specifying the CAPACITY, START__TIME, and STOP__TIME data elements corresponding to the MW demand being requested over each time interval associated with the reservation. The CAPACITY, START__TIME, and STOP__TIME data elements must fall within the amounts and time intervals associated with the original reservation.

The following data elements in transstatus and the appropriate ones in transcust shall take on the following implied values:

SELLER__CODE (value from SELLER__CODE in reservation designated by REASSIGNED__REF)
SELLER__DUNS (value from SELLER__DUNS in reservation designated by REASSIGNED__REF)
ALTERNATE__SERVICE__FLAG = YES
OFFER__PRICE = S0
BID__PRICE = S0
CEILING__PRICE = S0
TS__CLASS = Non-Firm (or whatever the Provider designates)
REASSIGNED__CAPACITY = MW capacity submitted in CAPACITY field of Template
REASSIGNED__START__TIME = time submitted in START__TIME field of Template
REASSIGNED__STOP__TIME = time submitted in STOP__TIME field of Template

Template: transalt

1. Input

CONTINUATION__FLAG
PATH__NAME
POINT__OF__RECEIPT
POINT__OF__DELIVERY
SOURCE
SINK
PRECONFIRMED
CAPACITY (Must be less than or equal to original capacity reservation)
STATUS__NOTIFICATION
START__TIME (Valid only to hour and within the time of original reservation)
STOP__TIME (Valid only to hour and within the time of original reservation)
REQUEST__REF
DEAL__REF
REASSIGNED__REF (Assignment Reference for the Firm reservation being used for request)
CUSTOMER__COMMENTS

2. Response (acknowledgment)

RECORD__STATUS
CONTINUATION__FLAG
ASSIGNMENT__REF (assigned by the TSIP)
SELLER__CODE (Primary)
SELLER__DUNS
PATH__NAME
POINT__OF__RECEIPT
POINT__OF__DELIVERY
SOURCE
SINK
PRECONFIRMED
ALTERNATE__SERVICE__FLAG (Defaulted to YES)
CAPACITY (Capacity requested)
STATUS__NOTIFICATION
START__TIME
STOP__TIME
REQUEST__REF

DEAL__REF
REASSIGNED__REF (Assignment Reference for the Firm reservation being used for request)
ERROR__MESSAGE

4.3.7.6 Seller to Reassign Service Rights to Another Customer (transassign)

Seller to Reassign Service Rights to Another Customer (Input) (transassign) is used by the seller to ask the Transmission Services Information Provider to reassign some or all of the seller's rights to Services to another Customer, for seller confirmed transactions that have occurred off the OASIS. The TSIP shall assign a unique ASSIGNMENT__REF in the response (acknowledgment) and enter the status CONFIRMED as viewed in the transstatus Template.

SELLER__CODE and SELLER__DUNS shall be determined from the registered connection used to input the request.

Only the following fields may be redefined in a continuation record for the transassign input Template: CAPACITY, START__TIME, STOP__TIME, REASSIGNED__REF, REASSIGNED__CAPACITY, REASSIGNED__START__TIME, and REASSIGNED__STOP__TIME.

SELLER__CODE and SELLER__DUNS shall be determined from the registered connection used to input the request.

Template: transassign

1. Input

CONTINUATION__FLAG
CUSTOMER__CODE
CUSTOMER__DUNS
PATH__NAME
POINT__OF__RECEIPT
POINT__OF__DELIVERY
SOURCE
SINK
CAPACITY
SERVICE__INCREMENT
TS__CLASS
TS__TYPE
TS__PERIOD
TS__SUBCLASS
START__TIME
STOP__TIME
OFFER__PRICE
ANC__SVC__LINK (optional: filled in if assignment is different than original transmission reservation)
POSTING__NAMES
REASSIGNED__REF
REASSIGNED__CAPACITY (Capacity being sold from each previous assignment)
REASSIGNED__START__TIME
REASSIGNED__STOP__TIME
SELLERS__COMMENTS

2. Response (acknowledgement)

RECORD__STATUS
CONTINUATION__FLAG
ASSIGNMENT__REF (assigned by TSIP)
CUSTOMER__CODE
CUSTOMER__DUNS
PATH__NAME
POINT__OF__RECEIPT
POINT__OF__DELIVERY
SOURCE
SINK
CAPACITY (Total capacity being reassigned)
SERVICE__INCREMENT
TS__CLASS
TS__TYPE
TS__PERIOD
TS__SUBCLASS
START__TIME
STOP__TIME
OFFER__PRICE
ANC__SVC__LINK
POSTING__NAME
REASSIGNED__REF
REASSIGNED__CAPACITY (Capacity being sold from each previous assignment)
REASSIGNED__START__TIME
REASSIGNED__STOP__TIME

SELLER__COMMENTS
ERROR__MESSAGE

4.3.8 Seller Posting of Transmission Services

Sellers shall use the following Templates for providing sell information. They may aggregate portions of several previous purchases to create a new service, if this capability is provided by the Transmission Services Information Provider:

4.3.8.1 Seller Capacity Posting (transpost)

Seller Capacity Posting (Input) (transport shall be used by the Seller to post the transmission capacity for resale on to the OASIS Node.

SELLER__CODE and SELLER__DUNS shall be determined from the registered connection used to input the request.

Template: transpost

1. Input

PATH__NAME
POINT__OF__RECEIPT
POINT__OF__DELIVERY
INTERFACE__TYPE
CAPACITY
SERVICE__INCREMENT
TS__CLASS
TS__TYPE
TS__PERIOD
TS__WINDOW
TS__SUBCLASS
OTHER__CURTAILMENT__PRIORITY (optional)
ANC__SVC__REQ
START__TIME
STOP__TIME
OFFER__START__TIME
OFFER__STOP__TIME
SALE__REF
OFFER__PRICE
SERVICE__DESCRIPTION
SELLER__COMMENTS

2. Response (Acknowledgment)

RECORD__STATUS
POSTING__REF (Assigned by TSIP)
PATH__NAME
POINT__OF__RECEIPT
POINT__OF__DELIVERY
INTERFACE__TYPE
CAPACITY
SERVICE__INCREMENT
TS__CLASS
TS__TYPE
TS__PERIOD
TS__WINDOW
TS__SUBCLASS
OTHER__CURTAILMENT__PRIORITY
ANC__SVC__REQ
START__TIME
STOP__TIME
OFFER__START__TIME
OFFER__STOP__TIME
SALE__REF
OFFER__PRICE
SERVICE__DESCRIPTION
SELLER__COMMENTS
ERROR__MESSAGE

4.3.8.2 Seller Capacity Modify (transupdate)

Seller Capacity Modify (Input) (transupdate) shall be used by a Seller to modify a posting of transmission capacity. SELLER__CODE and SELLER__DUNS shall be determined from the registered connection used to input the request.

Template: transupdate

1. Input

POSTING__REF (Must be provided)

CAPACITY (only if modified)
START__TIME (only if modified)
STOP__TIME (only if modified)
OFFER__START__TIME (only if modified)
OFFER__STOP__TIME (only if modified)
ANC__SVC__REQ (only if modified)
SALE__REF (only if modified)
OFFER__PRICE (only if modified)
SERVICE__DESCRIPTION (only if modified)
SELLER__COMMENTS (only if modified)

2. Response (acknowledgment)

RECORD__STATUS
POSTING__REF
CAPACITY
START__TIME
STOP__TIME
OFFER__START__TIME
OFFER__STOP__TIME
ANC__SVC__REQ
SALE__REF
OFFER__PRICE
SERVICE__DESCRIPTION
SELLER__COMMENTS
ERROR__MESSAGE

4.3.9 Purchase of Ancillary Services

4.3.9.1 Customer Requests to Purchase Ancillary Services (ancrequest)

Customer Requests to Purchase Ancillary Services (ancrequest) (Input, Template Upload) is used by the customer to purchase ancillary services that have been posted by a seller of those services. The same requirements exist for the use of STATUS__NOTIFICATION as for transrequest. The reference Data Elements are optional.

CUSTOMER__CODE and CUSTOMER__DUNS shall be determined from the registered connection used to input the request.

Template: ancrequest

1. Input

SELLER__CODE
SELLER__DUNS
CONTROL__AREA
CAPACITY
SERVCIE__INCREMENT
ANC__SERVICE__TYPE
STATUS__NOTIFICATION
START__TIME
STOP__TIME
BID__PRICE
PRECONFIRMED
POSTING__REF (Optionally Set by Customer)
SALE__REF (Optionally Set by Customer)
REQUEST__REF (Optionally Set by Customer)
DEAL__REF (Optionally Set by Customer)
CUSTOMER__COMMENTS

2. Response (acknowledgment)

RECORD__STATUS
ASSIGNMENT__REF (assigned by TSIP)
SELLER__CODE
SELLER__DUNS
CONTROL__AREA
CAPACITY
SERVICE__INCREMENT
ANC__SERVCIE__TYPE
STATUS__NOTIFICATION
START__TIME
STOP__TIME
BID__PRICE
PRECONFIRMED

POSTING__REF
SALE__REF
REQUEST__REF
DEAL__REF
CUSTOMER__COMMENTS
ERROR__MESSAGE

4.3.9.2 Ancillary Services Status (ancstatus)

Ancillary Services Status (ancstatus) is used to provide the status of purchase requests regarding the ancillary services that are available for sale by all Service Providers.

The AFFILIATE__FLAG will be set by the TSIP to indicate whether or not the Customer is an affiliate of the Seller.

The values of STATUS and processes for setting STATUS are the same as for transstatus.

Template: ancstatus

1. Query

SELLER__CODE*
SELLER__DUNS*
CUSTOMER__CODE*
CUSTOMER__DUNS*
CONTROL__AREA
SERVICE__INCREMENT
ANC__SERVICE__TYPE
STATUS
START__TIME
STOP__TIME
START__TIME__QUEUED
STOP__TIME__QUEUED
ASSIGNMENT__REF
SALE__REF
REQUEST__REF
DEAL__REF
TIME__OF__LAST__UPDATE (only if TIME__OF__LAST__UPDATE is posted by record)

2. Response

ASSIGNMENT__REF
SELLER__CODE
SELLER__DUNS
CUSTOMER__CODE
CUSTOMER__DUNS
AFFILIATE__FLAG (Set by TSIP)
CONTROL__AREA
CAPACITY
SERVICE__INCREMENT
ANC__SERVICE__TYPE
START__TIME
STOP__TIME
CEILING__PRICE
OFFER__PRICE
BID__PRICE
PRECONFIRMED
POSTING__REF
SALE__REF
REQUEST__REF
DEAL__REF
NEGOTIATED__PRICE__FLAG (''L'' if Seller accepted Price is lower than OFFER__PRICE in ancoffering Template; ''H'' if higher; otherwise blank)
STATUS=QUEUED, RECEIVED, REBID, OFFER, ACCEPTED, REFUSED, CONFIRMED, WITHDRAWN, ANNULLED, RETRACTED
STATUS__NOTIFICATION
STATUS__COMMENTS
TIME__QUEUED
RESPONSE__TIME__LIMIT
TIME__OF__LAST__UPDATE
PRIMARY __PROVIDER__COMMENTS
SELLER__COMMENTS
CUSTOMER__COMMENTS
SELLER__NAME

SELLER__PHONE
SELLER__FAX
SELLER__EMAIL
CUSTOMER__NAME
CUSTOMER__PHONE
CUSTOMER__FAX
CUSTOMER__EMAIL

4.3.9.3 Seller Approves Ancillary Service (ancsell)

Seller Approves Ancillary Service (ancsell) is used by the Seller to confirm acceptance after the Seller has approved the purchase an ancillary service.

SELLER__CODE and SELLER__DUNS shall be determined from the registered connection used to input the request.

Template: ancsell

1. Input

ASSIGNMENT__REF (Required)
OFFER__PRICE
STATUS=RECEIVED, OFFER, ACCEPTED, REFUSED
STATUS__COMMENTS
SELLER__COMMENTS

2. Response (acknowledgment)

RECORD__STATUS
ASSIGNMENT__REF
OFFER__PRICE
STATUS=RECEIVED, OFFER, ACCEPTED, REFUSED
STATUS__COMMENTS
NEGOTIATED__PRICE__FLAG
RESPONSE__TIME__LIMIT
SELLER__COMMENTS
ERROR__MESSAGE

4.3.9.4 Customers accepts Ancillary Service (anccust)

Customers accepts Ancillary Service (anccust) is used by the customer to confirm acceptance after the seller has approved the purchase of ancillary service.

The Customer must change the BID__PRICE to be equal to the OFFER__PRICE before the STATUS can be set to CONFIRMED.

customer__CODE and CUSTOMER__DUNS shall be determined from the registered connection used to input the request.

Template: anccust

1. Input

ASSIGNMENT__REF (Required)
REQUEST__REF
DEAL—REF
BID__PRICE
STATUS=REBID, CONFIRMED, WITHDRAWN
STATUS__COMMENTS
STATUS__NOTIFICATION (If left blank, then the original URL from the ancrequest will be used
CUSTOMER__COMMENTS

2. Response (Acknowledgment)

RECORD__STATUS
ASSIGNMENT__REF
REQUEST__REF
DEAL__REF
BID__PRICE
STATUS=REBID, CONFIRMED, WITHDRAWN
STATUS__COMMENTS
STATUS__NOTIFICATION
CUSTOMER__COMMENTS
ERROR__MESSAGE

4.3.10 Seller Posting of Ancillary Services

4.3.10.1 Seller Ancillary Services Posting (ancpost)

Seller Ancillary Services Posting (ancpost) is used by the Seller to post information regarding the different services that are available for sale by third party Sellers of ancillary services.

SELLER__CODE and SELLER__DUNS shall be determined from the registered connection used to input the request.

Template: ancpost

1. Input

CONTROL__AREA
SERVICE__DESCRIPTION
CAPACITY
SERVICE__INCREMENT
ANC__SERVICE__TYPE
START__TIME
STOP__TIME
OFFER__START__TIME
OFFER__STOP__TIME
SALE__REF
OFFER__PRICE
SELLER__COMMENTS

2. Response (acknowledgement)

RECORD__STATUS
POSTING__REF (Assigned by TSIP)
CONTROL__AREA
SERVICE__DESCRIPTION
CAPACITY
SERVICE__INCREMENT
ANC__SERVICE__TYPE
START__TIME
STOP__TIME
OFFER__START__TIME
OFFER__STOP__TIME
SALE__REF
OFFER__PRICE
SELLER__COMMENTS
ERROR__MESSAGE

4.3.10.2 Seller Modify Ancillary Services Posting (ancupdate)

Seller Modify Ancillary Services Posting (ancupdate) is used by the Seller to modify posted information regarding ancillary services that are available for sale by a third party Seller.

SELLER__CODE and SELLER__DUNS shall be determined from the registered connection used to input the request.

Template: ancupdate

1. Input

POSTING__REF (Required)
CAPACITY (only if modified)
SERVICE__DESCRIPTION (only if modified)
START__TIME (only if modified)
STOP__TIME (only if modified)
OFFER__START__TIME (only if modified)
OFFER__STOP__TIME (only if modified)
SALE__REF (only if modified)
OFFER__PRICE (only if modified)
SELLER__COMMENTS (only if modified)

2. Response (acknowledgment)

RECORD__STATES
POSTING__REF
CAPACITY
SERVICE__DESCRIPTION
START__TIME
STOP__TIME
OFFER__START__TIME
OFFER__STOP__TIME
SALE__REF
OFFER__PRICE
SELLER__COMMENTS
ERROR__MESSAGE

4.3.11 Informal Messages

4.3.11.1 Provider/Customer Want Ads and Informal Message Posting Request (messagepost)

Provider/Customer Want Ads and Informal Message Posting Request (messagepost) is used by Providers and Customers who wish to post a message. The valid entries for CATEGORY shall be defined by providers and shall be listed in the List of CATEGORY Template.

One CATEGORY shall be DISCOUNT. All discount prices accepted by a Customer shall be immediately posted as a message using the DISCOUNT CATEGORY. This will permit carry-over from Phase 1.

CUSTOMER__CODE and CUSTOMER__DUNS shall be determined from the registered connection used to input the request.

Template: messagepost

1. Input

SUBJECT
CATEGORY
VALID__FROM__TIME
VALID__TO__TIME
MESSAGE (must be specified)

2. Response (acknowledgment)

RECORD__STATUS
POSTING__REF (assigned by information provider)
SUBJECT
CATEGORY
VALID__FROM__TIME
VALID__TO__TIME
MESSAGE
ERROR__MESSAGE

4.3.11.2 Message (message)

Message (message) is used to view a posted Want Ad or Informal Message. The CATEGORY data element can be queried. Specifically it shall be possible to query for the CATEGORY of DISCOUNT. This will permit carry-over from Phase 1.

Template: message

1. Query

CUSTOMER__CODE
CUSTOMER__DUNS
POSTING__REF
CATEGORY
VALID__FROM__TIME
VALID__TO__TIME
TIME__POSTED

2. Response

CUSTOMER__CODE
POSTING__REF
SUBJECT
CATEGORY
VALID__FROM__TIME
VALID__TO__TIME
TIME__POSTED
CUSTOMER__NAME
CUSTOMER__PHONE
CUSTOMER__FAX
CUSTOMER__EMAIL
MESSAGE

4.3.11.3 Provider/Sellers Message Delete Request (messagedelete)

Provider/Sellers Message Delete Request (messagedelete) is used by Providers and Sellers who wish to delete their message. The POSTING__REF number is used to determine which message.

CUSTOMER__CODE and CUSTOMER__DUNS shall be determined from the registered connection used to input the request.

Template: messagedelete

1. Input

POSTING__REF

2. Response (acknowledgment)

RECORD__STATUS
POSTING__REF
ERROR__MESSAGE

4.3.11.4 Personnel Transfers (personnel)

Template: personnel

1. Query

TIME__OF__LAST__UPDATE
START__TIME__POSTED
STOP__TIME__POSTED

2. Response

POSTING__NAME
EMPLOYEE__NAME
FORMER__POSITION
FORMER__COMPANY
FORMER__DEPARTMENT
NEW__POSITION
NEW__COMPANY
NEW__DEPARTMENT
DATE__TIME__EFFECTIVE
DATE__TIME__POSTED
TIME__OF__LAST__UPDATE

4.3.11.5 Discretion (discretion)

Template: discretion

1. Query

START__TIME__POSTED
STOP__TIME__POSTED
STOP__TIME
SERVICE__TYPE
SERVICE__NAME
TIME__OF__LAST__UPDATE

2. Response

POSTING__NAME
RESPONSIBLE__PARTY__NAME (name of person granting discretion)
SERVICE__TYPE (ancillary or transmission)
SERVICE__NAME (make consistent with offering Templates)
TARIFF__REFERENCE
START__TIME
STOP__TIME
DISCRETION__DESCRIPTION
TIME__POSTED
TIME__OF__LAST__UPDATE

4.3.11.6 Standards of Conduct (stdconduct)

Template: stdconduct

1. Query

START__TIME__POSTED
STOP__TIME__POSTED
TIME__OF__LAST__UPDATE

2. Response

POSTING__NAME
RESPONSIBLE__PARTY__NAME
STANDARDS__OF__CONDUCT__ISSUES
TIME__POSTED
TIME__OF__LAST__UPDATE

4.4 FILE REQUEST AND FILE DOWNLOAD EXAMPLES

4.4.1 File Example for Hourly Offering

Example of the request to Primary Provider, aaa, and response for Seller, wxyz, for PATH__NAME ''W/AAAA/PATH–ABC//'' for April 10, 1996 from 8 a.m. to 3 p.m. (Note that the PATH__NAME consists of a REGION__CODE, PRIMARY__PROVIDER__CODE, PATH__CODE, and an OPTIONAL__CODE, separated with a slash, ''/''.) The VERSION for Phase 1A is 1.2.

The request is in the form of a URL query string and the response is a ASCII delimited file.

1. Query

http://(OASIS Node name)/OASIS/aaa/data/transoffering? ver=1.2 &templ=transoffering &fmt=data &pprov=AAAA &pprovduns=123456789 &path=W/AAA/ABC// &seller=WXYZAA &sellerduns=987654321 &POR=aaa &POD=bbb &service=hourly &TSCLASS1=firm &TSCLASS2=non-firm &stime=19960410080000PD &sptime=19960410150000PD

2. Response Data

REQUEST-STATUS=200↵ *(Successful)*
TIME__STAMP=19960409113526PD↵
VERSION=1.2↵
TEMPLATE=transoffering↵
OUTPUT__FORMAT=DATA↵
PRIMARY__PROVIDER__CODE=AAAA↵
PRIMARY__PROVIDER__DUNS=123456789↵
DATA__ROWS=14↵
COLUMN__HEADERS=TIME__OF__LAST__UPDATE, SELLER__CODE, SELLER__DUNS, PATH__NAME, POINT__OF__RECEIPT, POINT__OF__DELIVERY, INTERFACE__TYPE, OFFER__START__TIME, OFFER__STOP__TIME, START__TIME, STOP__TIME, CAPACITY, SERVICE__INCREMENT, TS__CLASS, TS__TYPE,TS__PERIOD, TS__SUBCLASS, SALE__REF, POSTING__REF, CEILING__PRICE, OFFER__PRICE, PRICE__UNITS, SERVICE__DESCRIPTION, SELLER__NAME, SELLER__PHONE, SELLER__FAX, SELLER-EMAIL, SELLER__COMMENTS↵
19960409030000PD,WXYZ, 987654321,W/AAA/ABC//,N/A,N/A,E, 19960402080000PD, 19960410080000PD,19960410080000PD,19960410090000PD,300, HOURLY, FIRM, POINT__T0__POINT, OFF__PEAK, N/A,N/A,A001,1.50,1.35,MW,N/A,N/A,N/A,N/A,N/A,10% DISCOUNT↵
19960409030000PD,WXYZ,987654321,W/AAA/ABC//,N/A,N/A,E, 19960402080000PD, 19960410080000PD,19960410080000PD,19960410090000PD,300, HOURLY, NON-FIRM, POINT__T0__POINT. OFF__PEAK, N/A,N/A,A001,1.50,1.35,MW,N/A,N/A,N/A,N/A,N/A,10% DISCOUNT↵
19960409030000PD,WXYZ,987654321,W/AAA/ABC//,N/A,N/A,E, 19960402080000PD, 19960410080000PD,19960410090000PD,1996041010000PD,300, HOURLY, FIRM, POINT__T0__POINT, OFF__PEAK, N/A,N/A,A001,1.50,1.35,MW,N/A,N/A,N/A,N/A,N/A,10% DISCOUNT↵
19960409030000PD,WXYZ,987654321,W/AAA/ABC//,N/A,N/A,E, 19960402080000PD, 19960410080000PD,19960410090000PD,199604100000PD,300, HOURLY, NON-FIRM, POINT__T0__POINT, OFF__PEAK, N/A,N/A,A001,1.50,1.35,MW,N/A,N/A,N/A,N/A,N/A,10% DISCOUNT↵
19960409030000PD,WXYZ,987654321,W/AAA/ABC//,N/A,N/A,E, 19960402080000PD, 19960410080000PD,19960410100000PD,19960410110000PD,300 HOURLY, NON-FIRM, POINT__T0__POINT, OFF__PEAK, N/A,N/A,A001,1.50,1.35,MW,N/A,N/A,N/A,N/A,N/A,10% DISCOUNT↵
19960409030000PD,WXYZ,987654321,W/AAA/ABC//,N/A,N/A,E, 19960402080000PD, 19960410100000PD,19960410110000PD,19960410110000PD,300, HOURLY, NON-FIRM, POINT__T0__POINT, OFF__PEAK, N/A,N/A,A001,1.50,1.35,MW,N/A,N/A,N/A,N/A,N/A,10% DISCOUNT↵
19960409030000PD,WXYZ,987654321,W/AAA/ABC//,N/A,N/A,E, 19960402080000PD, 19960410080000PD,19960410110000PD,19960410120000PD,300, HOURLY, FIRMPOINT__T0__POINT, OFF__PEAK, N/A,N/A,A001,1.50,1.35,MW,N/A,N/A,N/A,N/A,N/A,10% DISCOUNT↵
19960409030000PD,WXYZ,987654321,W/AAA/ABC//,N/A,N/A,E, 19960402080000PD, 19960410080000PD,19960410110000PD,19960410120000PD,300, HOURLY, NON-FIRM, POINT__T0__POINT, OFF__PEAK ,N/A,N/A,A001,1.50,1.35,MW,N/A,N/A,N/A,N/A,N/A,10% DISCOUNT↵
. . .
. . .
. . .
19960409030000PD,WXYZ,987654321,W/AAA/ABC//,N/A,N/A,E, 19960402080000PD, 19960410080000PD,19960410140000PD,19960410150000PD,300, HOURLY, FIRM, POINT__T0__POINT, OFF__PEAK, N/A,N/A,A001,1.50,1.35,MW,N/A,N/A,N/A,N/A,N/A,10% DISCOUNT↵
1996040903000PD. WXYZ. 987654321. W/AAA/ABC//, N/A,N/A,E. 19960402080000PD, 19960410080000PD, 19960410140000PD. 19960410150000PD.300. HOURLY, NON-FIRM, POINT__ TO__ POINT, OFF__PEAK, N/A, N/A,A001,1.50. 1,35,MW,N/A,N/A,N/A,N/A,N/A,10% DISCOUNT↵

4.4.2 File Example for Hourly Schedule Data

The example shows a request for the hourly schedule data from Primary Provider, aaa, related to the seller, wxyz, for the period 10 a.m. to 3 p.m. on April 10, 1996.

There are two idential requests examples using two slightly different methods. The first request is using a HTTP URL request string through an HTML GET method. The second request is a similar example using fetch__http from a file using a POST method.

1. Query

URL Request (HTTP method=GET)

http://OASIS Node name)/OASIS/aaa/data/schedule? ver=1.0 & pprov=AAAA & templ=schedule & fmt=data & pprovduns=123456789 & path=W/AAA/ABC// & seller=WXYZ & por=BBB & CCC & tz=PD & stime=19960410100000PD & sptime=19960410150000PD

URL request (HTTP method=POST)

S fetch__http http://(OASIS Node name)/OASIS/aaa/data/ OASISDATA-fc:*/OASIS/ wxyz/upload/in-file.txt* Where *in-file.txt* contains the following: ver=1.0 & pprov=AAAA & Templ=schedule & fmt=data & pprovduns=123456789 & path=W/AAA/ABC// & seller=WXYZ &por=BBB &pod=CCC & tz=PD & stime=19960410100000PD & sptime-19960410150000PD

2. Response Data

REQUEST-STATUS=200↵

TIME__STAMP=19960410114702PD↵
VERSION-1.2↵
TEMPLATE=schedule↵
OUTPUT__FORMAT=DATA↵
PRIMARY__PROVIDER__CODE=AAAA↵
PRIMARY__PROVIDER__DUNS=123456789↵
DATA__ROWS=5↵
COLUMN__HEADERS=TIME__OF__LAST__UPDATE, SELLER__CODE. SELLER__DUNS, PATH__NAME, POINT__OF__RECEIPT. POINT__OF__DELIVERY, CUSTOMER__CODE. CUSTOMER__DUNS, AFFILIATE__FLAG, START__TIME. STOP__TIME, CAPACITY, CAPACITY__SCHEDULED, SERVICE__INCREMENT, TS__CLASS, TS__TYPE, TS__PERIOD, TS__SUBCLASS, ASSIGNMENT__REF↵
1996049030000pd.wxyz.0987654321. W/AAA/ABC//.BBB.CCC. WXYZAA.0987654322.Y.19960410100000PD. 19960410110000PD.300.300. HOURLY, FIRM, POINT__ TO__ POINT, OFF__ PEAK, N/A, 856743↵
. . .↵
. . .↵
1996049030000pd.wxyz.0987654321. W/AAA/ABC//.BBB.CCC.WXYZAA. 0987654322.Y. 19960410130000PD. 19960410140000PD.300.300. HOURLY, FIRM, POINT__ TO__ POINT, OFF__ PEAK, N/A, 856743↵
1996049030000pd.wxyz. 0987654321.W/AAA/ABC//.BBB.CCC. WXYZAA.0987654322.Y. 19960410140000PD. 19960410150000PD.300.300. HOURLY, FIRM, POINT__ TO__ POINT, OFF__ PEAK, N/A, 856743↵

4.4.3 Customer Posting a Transmission Service Offering

The example shows how a Customer would post for sale the transmission service that was purchased previously. The Seller would create a file and upload the file using the FETCH__ HTTP program to send a file to the OASIS node of the Primary Provider.

1. Input:

VERSION-1.2↵
TEMPLATE=transpost↵
OUTPUT__ FORMAT=DATA↵
PRIMARY__ PROVIDER__ CODE=AAAA↵
PRIMARY__ PROVIDER__ DUNS=123456789↵
DATA__ ROWS=1↵
COLUMN__HEADERS=PATH__NAME, POINT__OF__DELIVER, INTERFACE__TYPE, CAPACITY, SERVICE__INCREMENT, TS__CLASS, TS__TYPE, TS__PERIOD, TS__SUBCLASS, START__TIME, STOP__TIME, OFFER__START__ TIME, OFFER__STOP__ TIME, SALE__REF. OFFER__PRICE, SERVICE__DESCRIPTION, SELLER__COMMENTPF↵
WXYZ.987654321.W/AAA/ABC//.N/A,N/A.E.150, HOURLY, FIRM, POINT__ TO__ POINT, OFF__ PEAK, N/A/ .19960402080000PD, 19960410080000PD, 19960410080000PD, 199604101500PD, A123.90.N/A, ‘‘As Joe said, ‘‘‘It is a good buy’’’’’↵
FETCH__ HTTP Command to send posting
S fetch__ http http//(OASIS Node name)/OASIS/abcd/data/transrequest-fc:/OASIS/abcd/upload/*post.txt*

2. Response Data

REQUEST-STATUS=200↵(Successful)
TIME__ STAMP=19960409113526PD↵
VERSION-1.2↵
TEMPLATE=transpost↵
OUTPUT__ FORMAT=DATA↵
PRIMARY__PROVIDER__ CODE=AAAA↵
PRIMARY__ PROVIDER__ DUNS=123456789↵
DATA__ ROWS=1↵
COLUMN__HEADERS=RECORD__STATUS, PATH__NAME, POINT__OF__RECEIPT, POINT__OF__DELIVER, INTERFACE__TYPE, CAPACITY, SERVICE__INCREMENT, TS__CLASS, TS__TYPE, TS__PERIOD, TS__SUBCLASS, START__TIME, STOP__TIME, OFFER__START__TIME, OFFER__STOP__ TIME__TIME, SALE__REF, OFFER__PRICE, SERVICE__DESCRIPTION, SELLER__COMMENTS, ERROR__MESSAGE↵
200.WXYZ.987654321, W/AAA/ABC//,N/A, N/A. E.150, HOURLY, FIRM, POINT__TO__POINT, OFF__PEAK, N/A. 19960402080000PD, 19960410080000PD, 19960410080000PD, 19960410150000PD, A123,.90, N/A/, ‘‘As Joe said, ‘‘‘It is a good buy’’’’’, No Error↵

4.4.4 Example of Re-aggregating Purchasing Services using Reassignment

The following examples do not show the complete Template information, but only show those elements of the Template of interest to the example.

a. Customer #1, ‘‘BestE’’ requests the purchase of 150 MW Firm ATC for 8 a.m. to 5 p.m. for $1.00 from a Primary Provider (transrequest).

TEMPLATE=‘‘transrequest’’↵
CUSTOMER__CODE=‘‘BestE’’↵
CAPACITY=150↵
TS__CLASS=‘‘FIRM’’↵
START__TIME=‘‘1996050708000000PD’’↵

STOP__TIME=''1996050717000000PD''↵
BID__PRICE=''$1.00''↵

The Information Provider assigns ASSIGNMENT__REF=5000 on acknowledgment.

b. Customer #1 purchases 120 MW ATC Non-firm for 3 p.m. to 9 p.m. for $.90 *(transrequest).* The Information Provider assigns the ASSIGNMENT__REF=5001 when the request for purchase is made and is shown in the acknowledgment.

TEMPLATE=''transrequest''↵
CUSTOMER__CODE=''BestE''↵
CAPACITY=120↵
TS__CLASS=''NON-FIRM''↵
START__TIME=''1996050715000000PD''↵
STOP__TIME=''1996050721000000PD''↵
BID__PRICE=''$1.05''↵

c. Customer #1 becomes Seller #1 and post the Transmission service of 100 MW ATC Non-firm capacity from 8 a.m. to 9 p.m. for resale at $.90/MW-hour.

TEMPLATE=''transpost''↵
SELLER__CODE=''BestE''↵
CAPACITY=100↵
TS__CLASS=''NON-FIRM''↵
START__TIME=''1996050708000000PD''↵
STOP__TIME=''1996050721000000PD''↵
SALE__REF=''BEST100''↵
OFFER__PRICE=.90↵
SELLER__COMMENTS=''aggregating two previous purchases''↵

d. Customer #2 then requests purchase of 100 MW Non-firm from Reseller #1 from 8 a.m. to 6 p.m. for $0.90/MW-hour (transrequest).

TEMPLATE=''transrequest''↵
CUSTOMER__CODE=''Whlsle''↵
SELLER__CODE=''BestE''↵
CAPACITY=100↵
TS__CLASS=''NON-FIRM''↵
START__TIME=''1996050708000000PD''↵
STOP__TIME=''1996050721000000PD''↵
SALE__REF=''BEST100''↵
DEAL__REF=''WPC100''↵
BID__PRICE=.90↵
CUSTOMER__COMMENTS=''Only need service until 6 p.m.''↵

The Information Provider provides the ASSIGNMENT__REF=5002 for this transaction.

e. Seller informs the Information Provider of the reassignment of the previous transmission rights when the seller accepts the customer purchase request (transsell).

TEMPLATE=''transsell''↵
CUSTOMER__CODE=''Whlsle''↵
SELLER__CODE=''BestE''↵
ASSIGNMENT__REF=5002↵
STATUS=''Accepted''↵
REASSIGNED__REF1=5000↵
REASSIGNED__CAPACITY1=100↵
REASSIGNED__START__TIME1=''199605070800PD''↵
REASSIGNED__STOP__TIME1=''199605071700PD''↵
REASSIGNED__REF2=5001↵
REASSIGNED__CAPACITY2=100↵
REASSIGNED__START__TIME2=''199605071700PD''↵
REASSIGNED__STOP__TIME2=''199605071800PD''↵

4.4.5 File Examples of the Use of Continuation Records

a. Basic Continuation Records

The first example of the use of Continuation Records is for the transrequest Template submitted by a Seller for purchase of a transmission reservation spanning 16 hours from 06:00 to 22:00 with ''ramped'' demand at beginning and end of time period. Two additional reservations appear prior to and following the profile to demonstrate the handling of ASSIGNMENT__REF by the OASIS node.

Only the following fields may be redefined in a continuation record for the transrequest Template: CAPACITY, START__TIME, STOP__TIME. Specification of any values corresponding to COLUMN__HEADERs other than CAPACITY, START__TIME, and STOP__TIME will be ignored, however commas must be included to properly align the CAPACITY, START__TIME and STOP__TIME fields.

Input:

VERSION=1.2↵

TEMPLATE=transrequest↵
OUTPUT__FORMAT=DATA↵
PRIMARY__PROVIDER__CODE=AEP↵
PRIMARY__PROVIDER__DUNS=123456789↵
DATA__ROWS=7↵
COLUMN__HEADERS=CONTINUATION__FLAG, SELLER__CODE, SELLER__DUNS, PATH__NAME, POINT__OF__RECEIPT. POINT__OF__DELIVERY, SOURCE, SINK, CAPACITY, SERVICE__INCREMENT, TS__CLASS, TS__TYPE, TS__PERIOD. TS__SUBCLASS, STATUS__NOTIFICATION, START__TIME, STOP__TIME, BID__PRICE. PRECONFIRMED, ANC__SVC__LINK, POSTING__REF, SALE__REF, REQUEST__REF, DEAL__REF, CUSTOMER__COMMENTS↵
N. AEP, 123456789, ABC/XY, CE, MECS...35, DAILY, FIRM, POINT__TO__POINT, OFF__PEAK, N/A., pub/AEP/incoming, 19970423000000ES, 19970424000000ES, 24.50, Y.SC: (cust:SP);RV:(cust:SP);RF(cust:RQ); EI:(cust:R123); SP:(custR234);SU:(cust:R345), PO123, S123, R765, D123, Standard daily reservation↵
N. AEP, 123456789, ABC/XY, CE, AMPO....5, HOURLY, NON-FIRM. POINT__TO__POINT, OFF__PEAK, N/A. pub/AEP/incoming, 19970423060000ES, 19970423070000ES, 2.50, Y, SC:(cust:SP);RV:(cust:SP);RF(cust:RQ);EI:(cust:R 123); SP:(custR234); SU:(cust:R345), P0123, S123, R765, D123, First piece of profile spanning 5 records↵
Y.....10.....19970423070000ES, 19970423080000ES.....Second piece↵
Y.....15.....19970423080000ES, 19970423200000ES.....Third piece↵
Y.....10.....19970423200000ES, 19970423210000ES.....Fourth piece↵
Y.....5.....19970423210000ES, 19970423220000ES.....Fifth piece↵
N. AEP, 123456789, ABC/XY, CE, MECS... 20, HOURLY, FIRM POINT__TO__POINT, OFF__PEAK, N/A, pub/AEP/incoming, 19970423040000ES, 19970423160000ES, 2.00, Y .SC:(cust:SP);RV:(cust:SP);RF(cust:RQ);EI:(cust:R123); SP:(custR234); SU:(cust:R345), PO123, S123, R765, D123, Standard hourly reservation after profiled reservation↵

Response:

REQUEST__STATUS=200↵
TIME__STAMP=19970422160523ES↵
TEMPLATE=transrequest↵
OUTPUT__FORMAT=DATA↵
PRIMARY__PROVIDER__CODE=AEP↵
PRIMARY__PROVIDER__DUNS=123456789↵
DATA__ROWS=7↵
COLUMN__HEADERS=RECORD__STATUS. CONTINUATION__FLAG, SELLER__CODE. SELLER__DUNS. PATH__NAME. POINT__OF__RECEIPT. POINT__OF__DELIVERY. SOURCE, SINK, CAPACITY, SERVICE__INCREMENT. TS__CLASS. TS__TYPE. TS__PERIOD. TS__SUBCLASS. STATUS__NOTIFICATION. START__TIME. STOP__TIME. BID__PRICE. PRECONFIRMED. ANC__SVC__LINK. POSTING__REF. SALE__REF. REQUEST__REF. DEAL__REF, CUSTOMER__COMMENTS. ERROR__MESSAGE↵
200. N. AEP. 123456789. ABC/XY. CE, MECS...35, DAILY. FIRM. POINT__TO__POINT. OFF__PEAK, N/A, pub/AEP/incoming, 19970423000000ES, 19970424000000ES, 24.50.Y.SC:(cust:SP):RV:(cust:SP):RF(cust:RQ); EI:(cust:R123); SP:(custR234); SU:(cust:R345), P0123, S123, R765, D123, Standard daily reservation, No error↵
200. N. AEP. 123456789. ABC/XY. CE, AMPO...5, HOURLY. NON-FIRM. POINT__TO__POINT. OFF__PEAK. N/A/, pub/AEP/incoming. 19970423060000ES, 19970423070000ES, 2.50. Y.SC:(cust:SP);RV:(cust:SP);RF(cust:RQ);EI:(cust:R123);SP:(custR234); SU:(cust:R345). PO123, R765, D123. First piece of profile spanning 5 records. No error↵
200. Y.....10.....19970423070000ES, 19970423080000ES.....Second piece. No error↵
200. Y.....15.....19970423080000ES, 19970423200000ES.....Third piece. No error↵
200. Y.....10.....19970423200000ES, 19970423210000ES.....Fourth piece. No error. ↵
200. Y.....5.....19970423210000ES, 19970423220000ES.....Fifth piece. No error. ↵
200. N. AEP. 123456789, ABC/XY, CE, MECS...20. HOURLY, FIRM, POINT__TO__POINT, OFF__PEAK, N/A. pub/AEP/incoming, 19970423040000ES, 19970423160000ES, 2.00, Y. SC:(cust:SP);RV:(cust:SP);RF(cust:RQ); EI:(cust:R123); SP:(custR234); SU:(cust:R345). PO123, S123, R765, D123. Standard hourly reservation after profiled reservation. No error↵

b. Submission of Reassignment Information—Case 1:

In the prior example, a reservation request was submitted to ''Rseler'' for 20 MW of Hourly Non-firm service from 04:00 to 16:00. Assume that Rseler has previously reserved service for the CE–VP path for Daily Firm in amount of 50 MW on 4/23 under ASSIGNMENT__REF=7019, and Hourly Non-Firm in amount of 10 MW from 08:00 to 20:00 on 4/23 under ASSIGNMENT__REF=7880. Rseler must designate which transmission service rights are to be reassigned to Cust to satisfy the 20MW from 04:00 to 16:00. This reassignment information is conveyed by Rseler using the transsell Template when the reservation request is ACCEPTED. At the SELLER's discretion, rights are assigned from the Non-firm reservation first (ASSIGNMENT__REF=7880) with the balance taken up by the Firm reservation (ASSIGNMENT__REF=7019).

The only fields allowed in ''continuation'' records for transsell Template are REASSIGNED__REF, REASSIGNED__CAPACITY, REASSIGNED__START__TIME, and REASSIGNED__STOP__TIME. Price may not be negotiated for each ''segment'' in a capacity profile.

Input:

VERSION=1.2↵
TEMPLATE=transsell↵
OUTPUT__FORMAT=DATA↵
PRIMARY__PROVIDER__CODE=AEP↵

PRIMARY__PROVIDER__DUNS=123456789↵
DATA__ROW=3↵
COLUMN__HEADERS=RECORD__STATUS, CONTINUATION__FLAG, ASSIGNMENT__REF. OFFER__PRICE. STATUS. STATUS__COMMENTS. ANC__SVC__LINK. SELLER__COMMENTS. REASSIGNED__REF. REASSIGNED__CAPACITY. REASSIGNED__START__TIME. REASSIGNED__STOP__TIME N. 8236. 2.00, ACCEPTED. Status comments here. SC:(cust:SP);RV:(cust:SP);RF(cust:RQ);EI:(cust:R123);SP:(CustR234); SU:(cust:R345). Seller comments here. 7019.20, 19970423040000ES. 19970423080000ES↵
200. Y.....7880. 10. 19970423080000ES. 19970423160000ES↵
200. Y.....7019. 10. 19970423080000ES. 19970423160000ES↵

Response:

VERSION=1.2↵
TEMPLATE=transsell↵
OUTPUT__FORMAT=DATA↵
PRIMARY__PROVIDER__CODE=AEP↵
PRIMARY__PROVIDER__DUNS=123456789↵
DATA__ROW=3↵
COLUMN__HEADERS=RECORD__STATUS. CONTINUATION__FLAG, ASSIGNMENT__REF. OFFER__PRICE. STATUS. STATUS__COMMENTS. ANC__SVC__LINK. SELLER__COMMENTS. REASSIGNED__REF. REASSIGNED__CAPACITY. REASSIGNED__START__TIME. REASSIGNED__STOP__TIME, ERROR__MESSAGES 200. N. 8236.2.00, ACCEPTED. Status comments here. SC:(cust:SP);RV:(cust:SP);RF(cust:RQ);EI:(cust:R123);sp:(CustR234); SU:(cust:R345). Seller comments here. 7019.20, 19970423040000ES. 19970423080000ES↵
200. Y.....7880. 10. 19970423080000ES. 19970423160000ES↵
200. Y.....7019. 10. 19970423080000ES. 19970423160000ES↵

c. Submission of Reassignment Information—Case 2:

Primary provider, AEP, is notified of a sale/assignment of transmission service rights from ''Resell'' to ''cust''. The parameters of the new reservation are for 10MW or 4/23 for ''off-peak'' hours (00:00–06:00 and 22:00–24:00) on POR/POD CE–VP. Rseler is assigning rights to 10MW from a prior reservation for the CE–VP path for Daily Firm in amount of 50 MW on 4/23 under ASSIGNMENT__REF=7019 to Cust. AEP would submit the following information using the transassign Template to post this (re)sale. The only fields allowed in ''continuation'' records for the transassign Template are CAPACITY, START__TIME, STOP__TIME, REASSIGNED__REF, REASSIGNED__CAPACITY, REASSIGNED__START__TIME, and REASSIGNED__STOP__TIME.

Even though there is a one-to-one correspondence between the segments of the new reservations and the reassignment of service from a prior reservation, it is entirely possible that a reservation spanning a single continguous period would require multiple continuation records to convey reassignment information, and vice versa.

Fields for CUSTOMER__NAME and SELLER__NAME were used to convey user names for subsequent resolution of contact information from user registration.

Input:

VERSION=1.2↵
TEMPLATE=transassign↵
OUTPUT__FORMAT=DATA↵
PRIMARY__PROVIDER__CODE=AEP↵
PRIMARY__PROVIDER__DUNS=123456789↵
DATA__ROWS=2↵
COLUMN__HEADERS=CONTINUATION__FLAG, CUSTOMER__CODE, CUSTOMER__DUNS, PATH__NAME, POINT__OF__RECEIPT, POINT__OF__DELIVERY, SOURCE, SINK, CAPACITY, SERVICE__INCREMENT, TS__CLASS, TS__TYPE, TS__PERIOD, TS__SUBCLASS, START__TIME, STOP__TIME, OFFER__PRICE, SALE__REF, POSTING__NAME, REASSIGNED__REF, REASSIGNED__CAPACITY, REASSIGNED__START__TIME, REASSIGNED__STOP__TIME, SELLER__COMMENTS↵
N. Resler, 456123789, Cust. 987654321..CE. VP...10. HOURLY. NON-FIRM, POINT__TO__POINT, OFF__PEAK, N/A. 19970423000000ES. 19970423060000ES. 2.00, Joe Smith, Jane Doe . N. 19970422121354ES..7019. 10. 19970423000000ES. 19970423060000ES. Seller comments go here↵
Y.....10.....19970423220000ES. 19970424000000ES.....7019. 10. 19970423220000ES. 19970424000000ES↵

Response:

REQUEST__STATUS=200↵
TIME__STAMP=19970422144520ES↵
VERSION=1.2↵
TEMPLATE=transassign↵
OUTPUT__FORMAT=DATA↵
PRIMARY__PROVIDER__CODE=AEP↵
PRIMARY__PROVIDER__DUNS=123456789↵
DATA__ROWS=2↵
COLUMN__HEADERS=RECORD__STATUS, CONTINUATION__FLAG, ASSIGNMENT__REF, SELLER__CODE, SELLER__DUNS, CUSTOMER__CODE, CUSTOMER__DUNS, AFFILIATE__FLAG, PATH__NAME, POINT__OF__RECEIPT, POINT__OF__DELIVERY, SOURCE, SINK, CAPACITY, SERVICE__INCREMENT, TS__CLASS, TS__TYPE, TS__PERIOD, TS__SUBCLASS, START__TIME, STOP__TIME, OFFER__PRICE, SELLER__NAME, CUSTOMER__NAME, TIME__QUEUED,

SALE__REF, REASSIGNED__REF, REASSIGNED__CAPACITY, REASSIGNED__START__TIME, REASSIGNED__STOP__TIME, SELLER__COMMENTS, ERROR__MESSAGE↵
200. N. 8207, Rseler, 456123789, Cust. 987654321, N., CE. VP...10, HOURLY, FIRM, POINT__TO__POINT, OFF__PEAK, N/A. 19970423000000ES. 19970423060000ES. 2.00, Joe Smith, Jane Doe , 19970422121354ES, . 7019, 10, 19970423000000ES, 19970423060000ES, Seller comments go here.↵
200, Y.....10.....19970423220000ES, 19970424000000ES.....7019, 10, 19970423220000ES, 19970424000000ES..↵

d. Query of Transmission Reservation Status:

The following typical response to a transstatus query might be delivered for 4/23 based on prior examples. Note that the only fields returned in ''continuation'' records are, CAPACITY, START__TIME, STOP__TIME, REASSIGNED__REF, REASSIGNED__CAPACITY, REASSIGNED__START__TIME, and REASSIGNED__STOP__TIME (price fields are debatable).

Input:

<appropriate query name/value pairs to return reservations for 4/23>

Response:

REQUEST__STATUS=200↵
TIME__STAMP=19970423040523ES↵
TEMPLATE=transstatus↵
OUTPUT__FORMAT=DATA↵
PRIMARY__PROVIDER__CODE=AEP↵
PRIMARY__PROVIDER__DUNS=123456789↵
DATA__ROWS=11↵
COLUMN__HEADERS= CONTINUATION__FLAG, ASSIGNMENT__REF, SELLER__CODE, SELLER__DUNS, CUSTOMER__CODE, CUSTOMER__DUNS, AFFILIATE__FLAG, PATH__NAME, POINT__OF__RECEIPT, POINT__OF__DELIVERY, SOURCE, SINK, CAPACITY, SERVICE__INCREMENT, TS__CLASS, TS__TYPE, TS__PERIOD, TS__SUBCLASS, START__TIME, STOP__TIME, CEILING__PRICE, OFFER__PRICE, BID__PRICE, PRECONFIRMED, ANC__SVC__LINK, ALTERNATE__SERVICE__FLAG, POSTING__REF, SALE__REF, REQUEST__REF, DEAL__REF, NEGOTIATED__PRICE__FLAG, STATUS, STATUS__COMMENTS, TIME__QUEUED, TIME__OF__LAST__UPDATE, PRIMARY__PROVIDER__COMMENTS, SELLER__COMMENTS, CUSTOMER__COMMENTS, SELLER__NAME, SELLER__PHONE, SELLER__FAX, SELLER__EMAIL, CUSTOMER__NAME, CUSTOMER__PHONE, CUSTOMER__FAX, CUSTOMER__EMAIL, REASSIGNED__REF, REASSIGNED__CAPACITY, REASSIGNED__START__TIME, REASSIGNED__STOP__TIMES
N. 8207, Rseler, 456123789. ACust. 987654321. N..CE. VP...10, HOURLY, FIRM, POINT__TO__POINT, OFF__PEAK, N/A. 19970423000000ES, 19970423060000ES, 2.25, 2.00, 6.20. N.SC:(cust:SP):RV:(cust:SP):RF(cust:RQ); EI:(cust:R123); SP:(custR234); SU:(cust:R345).N.....N, CONFIRMED..19970422121354ES..TP Comments, Seller comments go here, Customer comments, Joe Smith, (888)–123–4567, (888)–123–1231, jsmith@xyz.com. Jane Doe, (999)–123–4567, (999)–123–8823..7019, 10, 19970423000000ES. 19970423060000ES↵
Y,,,,,,,,,,,,10,,,,,,19970423220000ES, 19970424000000ES.....7019, 10, 19970423220000ES, 19970424000000ES↵
N. 8234, Rseler, 456123789. ACust. 987654321.N.CE.MECS...35 DAILY, FIRM, POINT__TO__POINT, OFF__PEAK, N/A. 19970423000000ES, 19970423060000ES, 42.00, 24.50, 24.50, N,SC:(cust:SP):RV(cust:SP);RF(cust:RQ); E1:(cust:R123); SP:(custR234); SU:(cust:R345),N.....N, CONFIRMED..19970422121354ES..Standard daily reservation, System Operator, Customer comments, Frank Orth, (999)–123–4567,(999)–123–1231,jsmith@xyx.com, Jane Doe, (999)–123–4567, (999)–123–8823..7019, 10, 19970423000000ES, 19970423060000ES↵
N. 8235, AEP, 123456789, Cust. 987654321, N.. CE, AMPO...5, HOURLY, NON-FIRM, POINT__TO__POINT, OFF__PEAK, N/A/ 19970423060000ES, 19970423070000ES, 2.50, 2.50, 6.20, N, SC:(cust:SP):RV(cust:SP);RF(cust:RQ); E1:(cust:R123); SP:(custR234); SU:(cust:R345),N.....N,CONFIRMED..19970422160523ES..Profile verified. First piece. Customer comments, System Operator, (888)–123–4567, (888)–123–1231, jsmith@xyz.com.Jane Doe (999)–123–4567, (999)–123–8823..7019, 10, 19970423000000ES, 19970423060000ES↵
Y.....10.....19970423070000ES, 19970423080000ES.....↵
Y.....15.....19970423080000ES, 19970423200000ES.....↵
Y.....10.....19970423200000ES, 19970423210000ES.....↵
Y.....5.....19970423210000ES, 19970423220000ES.....↵
N, 8236, Rseler, 456123789, Cust, 987654321, N..CE, VP...20,HOURLY, FIRM, POINT__TO__POINT, OFF__PEAK, N/A, 19970424040000ES, 19970424160000ES, 2.00, 2.50, 6.20, N.....CONFIRMED,, 19970422160523ES..Bid price refused, Negotiated OFFER__PRICE accepted, Joe Smith, (888)–123–4567, (888)–123–1231, jsmith@xyz.com, Jane Doe, (999)–123–4567, (999)–123–8823..7019, 20, 19970423040000ES, 199704230080000ES↵
Y.....7880.10.....19970423080000ES, 19970423160000ES↵
Y.....7019.10.....19970423080000ES, 19970423160000ES↵

4.4.6 Example of Negotiation of Price

4.4.6.1 Negotiation with Preconfirmation

a. The Customer submits a PRECONFIRMED transmission service request using the transrequest Template. Initially, the STATUS is set to QUEUED by OASIS.

b. The Seller has the option of setting STATUS via the transsell Template to one of the following: RECEIVED, STUDY, ACCEPTED, or REFUSED. Since the request is PRECONFIRMED, the Seller is blocked from altering OFFER__PRICE by OASIS, and blocked from setting status to OFFER.

c. If the Seller sets STATUS to ACCEPTED, OASIS will immediately set STATUS to CONFIRMED and sets the OFFER__PRICE to the BID__PRICE.

d. The Customer may WITHDRAW request via transcust Template at any time up to point where the Seller sets STATUS to ACCEPTED.

e. Once the STATUS is CONFIRMED, the OFFER__PRICE officially becomes the terms of the reservation.

4.4.6.2 Negotiations without Preconfirmation

a. The Customer submits a transmission reservation request with the BID__PRICE less than the CEILING__PRICE via the transrequest Template. Initially the STATUS is set to QUEUED by OASIS.

b. The Seller has the option of setting the STATUS via the transsell Template to one of the following: RECEIVED, STUDY, ACCEPTED, OFFER, or REFUSED.

c. The Seller determines that the BID__PRICE is too low, sets the OFFER__PRICE to the price he wants, and sets the STATUS to OFFER via the transsell Template.

d. The Customer agrees to the OFFER__PRICE, sets the BID__PRICE equal to the OFFER PRICE, and sets the STATUS to CONFIRMED via the transcust Template.

e. The OFFER__PRICE with the STATUS of CONFIRMED locks in the terms of the reservation.

4.4.6.3 Multiple Step Negotiations

a. The Customer submits a transmission reservation request with the BID__PRICE less than the CEILING__PRICE via the transrequest Template. Initially the STATUS is set to QUEUED by OASIS.

b. The Seller has the option of setting STATUS via the transsell Template to one of the following: RECEIVED, STUDY, ACCEPTED, OFFER, or REFUSED.

c. The Seller determines that the BID__PRICE is too low, sets the OFFER__PRICE to the desired value, and sets the STATUS to OFFER via the transsell Template.

d. The Customer responds to the new OFFER__PRICE with an updated BID__PRICE and sets the STATUS to REBID for re-evaluation by the Seller.

e. The Seller determines that the BID__PRICE now is acceptable and sets the STATUS to ACCEPTED via the transsell Template. The transition to ACCEPTED state requires the OFFER__PRICE to be set to the BID__PRICE: accepting a reservation with an OFFER__PRICE different from BID__PRICE would require the STATUS be set to OFFER rather than ACCEPTED (see item c).

f. The Customer agrees to the OFFER__PRICE and sets the STATUS to CONFIRM via the transcust Template.

g. The OFFER__PRICE with the STATUS as CONFIRMED locks in the terms of the reservation.

4.4.6.4 Negotiations Refused by Seller

a. The Customer submits a transmission reservation request with the BID__PRICE less than the CEILING PRICE via the transrequest Template. Initially the STATUS is set to QUEUED by OASIS.

b. The Seller has the option of setting the STATUS via the transsell Template to one of the following: RECEIVED, STUDY, ACCEPTED, OFFER, or REFUSED.

c. The Seller determines that the BID__PRICE is too low, sets OFFER__PRICE to his desired value, and sets STATUS to OFFER via the transsell Template.

d. The Customer responds to OFFER__PRICE with updated BID__PRICE and sets the STATUS to REBID via the transcust Template for re-evaluation by Seller.

e. The Seller breaks off all further negotiations by setting the STATUS to REFUSED.

4.4.6.5 Negotiations Withdrawn by Customer

a. The Customer submits a transmission reservation request with the BID__PRICE less than the CEILING PRICE via the transrequest. Initially the STATUS is set to QUEUED by OASIS.

b. The Seller has the option of setting STATUS via the transsell Template to one of the following: RECEIVED, STUDY, ACCEPTED, OFFER, or REFUSED.

c. The Seller determines that the BID__PRICE is too low, sets the OFFER__PRICE to his desired value, and sets the STATUS to OFFER via the transsell Template.

d. The Customer responds to the OFFER__PRICE with an updated BID__PRICE and sets the STATUS to REBID for re-evaluation by Seller.

e. The Seller determines that the BID__PRICE is still too low, sets the OFFER__PRICE to another value, and sets STATUS to OFFER via the *transsell* Template.

f. The Customer breaks off all further negotiations by setting STATUS to WITHDRAWN (or the customer/seller could go through additional iterations of REBID/OFFER until negotiations are broken off or the reservation is CONFIRMED).

4.5 Information Supported by Web Page

There shall be a Web page on each OASIS node with information on requesting the text file of the tariffs and service agreements.

5. Performance Requirements

A critical aspect of any system is its performance. Performance encompasses many issues, such as security, sizing, response to user requests, availability, backup, and other parameters that are critical for the system to function as desired. The following sections cover the performance requirements for the OASIS.

5.1 Security

Breaches of security include many inadvertent or possibly even planned actions. Therefore, several requirements shall be implemented by the TSIPs to avoid these problems:

a. Provider Update of TS Information: Only Providers, including Secondary Providers, shall be permitted to update their own TS Information.

b. Customer Input Only ASCII Text: TSIPs shall be permitted to require that inputs from Customers shall be filtered to permit only strict ASCII text (strip bit 8 from each byte).

c. Provider Updating Over Public Facilities: If public facilities are involved in the connection between a Provider and the OASIS Node, the Provider shall be able to update his TS Information only through the use of ASCII or through encrypted files.

d. User Registration and Login: All Users shall be required to register and login to a Provider's Account before accessing that Provider's TS Information.

e. User Passwords: All Users shall enter their personal password when they wish to access to TS Information beyond the lowest Access Privilege.

f. Service Request Transactions: Whenever Service Request transactions are implemented entirely over the OASIS, both an individual Customer password for the request, and an individual Provider password for the notification of acceptance shall be required.

g. Data Encryption: Sophisticated data encryption techniques and the ''secure id'' mechanisms being used on the public Internet shall be used to transfer sensitive data across the Internet and directly between OASIS Nodes.

h. Viruses: Since only data is being transmitted between the OASIS Nodes and the Users, viruses are unlikely to be passed between them. Therefore, TSIPs shall be responsible for ensuring that the OASIS Nodes are free from viruses, but need not screen data exchanges with Users for viruses.

i. Performance Log: TSIPs shall keep a log on User usage of OASIS resources.

j. Disconnection: TSIPs shall be allowed to disconnect any User who is degrading the performance of the OASIS Node through the excessive use of resources, beyond what is permitted in their Service Level Agreement.

k. Premature Access: The TSIP log shall also be used to ensure that Users who are affiliated with the Provider's company (or any other User) do not have access to TS information before it is publicly available.

l. Firewalls: TSIPs shall employ security measures such as firewalls to minimize the possibility that unauthorized users shall access or modify TS Information or reach into Provider or User systems. Interfaces through Public Data Networks or the Internet shall be permitted as long as these security requirements are met.

m. Certificates and Public Key Standards (optional): Use of alternative forms of login and authentication using certificates and public key standards is acceptable.

5.2 Access Privileges

Users shall be assigned different Access Privileges based on external agreements between the User and the Provider. These Access Privileges are associated with individual Users rather than just a company, to ensure that only authorized Users within a company have the appropriate access.

The following Access Privileges shall be available as a minimum:

a. Access Privilege Read-Only: The User may only read publicly available TS Information.

b. Access Privilege for Transactions: The Customer is authorized to transact Services Requests.

c. Access Privilege Read/Write: A Secondary Provider shall have write access to his own Provider Account on an OASIS Node.

5.3 OASIS Response Time Requirements

TSIPs can only be responsible for the response capabilities of two portions of the Internet-based OASIS network:

- The response capabilities of the OASIS Node server to process interactions with Users.
- The bandwidth of the connection(s) between the OASIS Node server and the Internet.

Therefore, the OASIS response time requirements are as follows:

a. OASIS Node Server Response Time: The OASIS Node server shall be capable of supporting its connection(s) to Users with an average aggregate data rate of at least ''A'' bits per second. ''A'' is defined as follows:

A=N * R bits/sec

where:

N=5% of registered Customers.

and

R=28,800 bits/sec per Customer.

b. OASIS Node Network Connection Bandwidth: The bandwidth ''B'' of the OASIS Node connection(s) to the Internet shall be at least:

B=2 * A bits/sec

c. Time to Meet Response Requirements: The minimum time responses shall be met within 1 month of User registration for any single new User. If more than 10 new Users register in one month, 2 months lead time shall be permitted to expand/upgrade the OASIS Note to meet the response requirements.

5.4 OASIS Provider Account Availability

The following are the OASIS Provider Account availability requirements:

a. OASIS Provider Account Availability: The availability of each OASIS Provider account on a OASIS Node shall be at least 98.0% (downtime of about 7 days per year).

Availability is defined as:

$$\%\ \text{Availability} = \frac{(1 - \text{Cumulative Provider Account Downtime})}{\text{Total Time}} * 100$$

A Provider account shall be considered to be down, and downtime shall be accumulated, upon occurrence of any of the following:

1. One or more Users cannot link and log on to the Provider account. The downtime accumulated shall be calculated as:

Σ for affected Users of 1/n * (Login time), which is the time used by each affected User to try to link and log on to the Provider account, and where ''n'' is the total number of Users actively registered for that Provider account.

2. One or more Users cannot access TS Information once they have logged on to a Provider account. The downtime accumulated shall be calculated as:

Σ for affected Users of 1/n * (Access Time), which is the time used by each affected User to try to access data, and where ''n'' is the total number of Users actively registered for that Provider.

3. A five (5) minute penalty shall be added to the cumulative downtime for every time a User loses their connection to a Provider's account due to an OASIS Node momentary failure or problem.

5.5 Backup and Recovery

The following backup and recovery requirements shall be met:

a. Normal Backup of TS Information: Backup of TS Information and equipment shall be provided within the OASIS Node so that no data or transaction logs are lost or become inaccessible by Users due to any single point of failure. Backed up data shall be no older than 30 seconds. Single points of failure include the loss of one:

- Disk drive or other storage device
- Processor
- Inter-processor communications (e.g., LAN)
- Inter-OASIS communications
- Software application
- Database
- Communication ports for access by Users
- Any other single item which affects the access of TS Information by Users

b. Spurious Failure Recovery Time: After a spurious failure situation, all affected Users shall regain access to all TS Information within 30 minutes. A spurious failure is a temporary loss of services which can be overcome by rebooting a system or restarting a program. Permanent loss of any physical component is considered a catastrophic failure.

c. Long-Term Backup: Permanent loss of critical data due to a catastrophic failure shall be minimized through off-line storage on a daily basis and through off-site data storage on a periodic basis.

d. Catastrophic Failure Recovery: Recovery from a catastrophic failure or loss of an OASIS Node may be provided through the use of alternate OASIS Nodes which meet the same availability and response time requirements. TSIPs may set up prior agreements with other TSIPs as to which Nodes will act as backups to which other Nodes, and what procedure will be used to undertake the recovery. Recovery from a catastrophic failure shall be designed to be achieved within 24 hours.

5.6 Time Synchronization

The following are the time requirements:

a. Time Synchronization: Time shall be synchronized on OASIS Nodes such that all time stamps will be accurate to within ''0.5 second of official time. This synchronization may be handled over the network using NTP, or may be synchronized locally using time standard signals (e.g. WWVB, GPS equipment).

b. Network Time Protocol (NTP): OASIS Nodes shall support the Internet tool for time synchronization, Network Time Protocol (NTP), which is described in RFC–1350, version 3, so that Users shall be able to request the display and the downloading of current time on an OASIS node for purposes of user applications which might be sensitive to OASIS time.

5.7 TS Information Timing Requirements

The TS Information timing requirements are as follows, except they are waived during emergencies.

a. TS Information Availability: The most recent Provider TS information shall be available on the OASIS Node within 5 minutes of its required posting time at least 98% of the time. The remaining 2% of the time the TS Information shall be available within 10 minutes of its scheduled posting time.

b. Notification of Posted or Changed TS Information: Notification of TS Information posted or changed by a Provider shall be made available within 60 seconds of the log.

c. Acknowledgment by the TSIP: Acknowledgment by the TSIP of the receipt of User Purchase requests shall occur within 1 minute. The actual negotiations and agreements on Purchase requests do not have time constraints.

5.8 TS Information Accuracy

The following requirements relate to the accuracy of the TS information:

a. TS Information Reasonability: TS information posted and updated by the Provider shall be validated for reasonability and consistency through the use of limit checks and other validation methods.

b. TS Information Accuracy: Although precise measures of accuracy are difficult to establish, Providers shall use their best efforts to provide accurate information.

5.9 Performance Auditing

The following are the performance auditing requirements:

a. User Help desk Support: TSIPs shall provide a ''Help Desk'' that is available at least during normal business hours (local time zone) and normal work days.

b. Monitoring Performance Parameters: TSIPs shall use their best efforts to monitor performance parameters. Any User shall be able to read or down load these performance statistics.

5.10 Migration Requirements

Whenever a new version of the S&CP is to be implemented, a migration plan will be developed for cutting over to the new version.

Appendix A—Data Element Dictionary

Version 1.2

May 27, 1998

Data dictionary element name	Alias	Field format: minimum characters (type of ASCII) maximum characters	Restricted values	Definition of data element
AFFILIATE__FLAG	AFFLAG	1(ALPHANUMERIC)3	Valid Values YES NO	Set to YES if customer is an affiliate of the provider.
ANC__SERVICE__TYPE	ANCTYPE	1(ALPHANUMERIC)20	Valid types • EL • SP • SU • RV • RF • SC • (Registered)	EI—Energy Imbalance. EP—Spinning Reserve. SU—Supplemental Reserve. RV—Reactive supply and Voltage Control. RF—Regulation and Frequency response. SC—Scheduling, system Control and Dispatch. (Registered) must be registered with www.tsin.com and listed in the ANCSERV template.
NAC__SVC__LINK	ANCSVCLI-NK.	1(ALPHANUMERIC)300	Formatted string as follows: SC:(AA); RV: (AA); RF: (AA[:xxx[:yyy[:nnn]]]); EL: (AA[:xxx[:yyy[:nnn]]]); SP: (AA[:xxx[:yyy[:nnn]]]); SU: (AA[:xxx[:yyy[:nnn]]]); (Registered): (AA[:xxx[:yyy[:nnn]]]);	The method for linking ancillary services to a transmission service request. The provider and capacity of each ancillary service is identified using the formated string: SC:(AA); RV:(AA); RI:[:xxx[:yyy[:nnn]]]); EI: (AA[:xxx[:yyy[:nnn]]]); SP:(AA[:xxx[:yyy[:nnn]]]); [Registered):(AA[:xxx[:yyy[:nnn]]]) where AA is the appropriate PRIMARY__PROVIDER__CODE, SELLER__CODE; or CUSTOMER__CODE, and represents the company providing the ancillary services. ''AA'' may be unspecified for ''xxx'' type identical to ''FI'', in which case the ':'' character must be present and precede the ''FI'' type. If multiple ''AA'' terms are necessary, then each ''AA'' grouping will be enclosed within parenthesis, with the overall group subordinate to the ANC__SVC__TYPE: specified within parenthesis. and where xxx represents either: —''FT'' to indicate that the Customer will determine ancillary services at a future time, or —''SI'' to indicate tht the Customer will self-provide the ancillary services, or —''RQ'' to indicate that the Customer is asking the OASIS to initiate the proecess for making an ancillary services reservation with the indicated Provider or Seller on behalf of the Customer. The Customer must then continue the reservation process with the Provider or Seller. If the transmission services request is for preconfirmed service, then the ancillary services shall also be preconfirmed, or —''AR'' to indicate an assignment reference number sequence follows.

Data dictionary element name	Alias	Field format: minimum characters (type of ASCII) maximum characters	Restricted values	Definition of data element
				The terms ''yyy'' and ''nnn'' are subordinate to the xxx type of ''AR'' yyy represents the ancillary services reservation number (ASSIGNMENT__REF) and nnn represents the capacity of the reserved ancillary services. Square brackets are used to indicate optional elements and are not used in the actual linkage itself. Specifically, the :yyy is applicable to only the ''AR'' term and the :nnn may optionally be left off if the capacity of ancillary services is the same as for the transmission services, and optionally multiple ancillary reservations may be indicated by additional (xxx[:yyy[:nnn]]) enclosed within parenthesis. If no capacity amount is indicated, the required capacity is assumed to
ANC__SVC__REQ	ANCSVCREQ.	1(ALPHANUMERIC)100	EI: (M.R.O.U); SP; (M.R.O.U);. SU: (M.R.O.U); RV: (M.R.O.U): RE: (M.R.O.U); SC: (M.R.O.U): (registered): (M.R.O.U)	Ancillary services required for a transmission services offering. The appropriate letter (M.R.O.U) will be assigned to each of the six Proforma FERC ancillary services (see ANC__SERVICE__TYPE), where the letters mean the following: (M) Mandatory, which implies that the Primary Provider must provide the ancillary service (R) Required, which implies that the ancillary service is required, but not necessarily from the Primary Provider (O) Optional, which implies that the ancillary service is not necessarily required, but could be provided (U) Unknown, which implies that the requirements for the ancillary service are not know at this time.
ALTERNATE__SERVICE__FLAG.	ALTSVCFLG	2(ALPHANUMERIC)3	Defaulted to ''YES''	Used as a flag to identify this reservation as a NON-FIRM use of FIRM transmission services on an alternate point of delivery.
ASSIGNMENTU__REF	AREF	1(ALPHANUMERIC)12	Unique value	A unique reference number assigned by a Transmission Information Provider to provide a unique record for each transmission or ancillary service request. A single transmission or ancillary service request will be over a contiguous time period, i.e. from a START__TIME to an STOP__TIME.
BID__PRICE	BIDPR	1(NUMERIC)5 +'','' + 2(NUMERIC)12.	Positive number with 2 decimals.	The current bid price of a Service in dollars and cents. Used by Customers to designate a price being bid.
CAPACITY	CAP	1(NUMERIC)12	Non-negative number in units of MW.	Transfer capability is the measure of the ability of the interconnected electric system to readily move or transfer power from one area to another over all transmission lines (or paths) between those areas under specified system conditions. In this context ''area'' may be an individual electric system, powerpool, control area, subregion, or NERC region or portion thereof.
CAPACITY__CURTAILED	CAPCUR	1(NUMERIC)12	Non-negative number in units of MW.	The amount of transfer capability curtailed by the Primary provider for emergency reasons.
CAPACITY__SCHEDULED	CAPSCH	1(NUMERIC)12	Non-negative number in units of MW.	Transfer capability scheduled on each path.

Data dictionary element name	Alias	Field format: minimum characters (type of ASCII) maximum characters	Restricted values	Definition of data element
CATEGORY	CAT	1(ALPHANUMERIC)25	Valid name from CATEGORY in LIST Template.	A name to be used to categorize messages. Valid names would include: *Disocunt, Want-Ad, Curtailment, Outage, Oasis Maint Notice.*
CEILING__PRICE	CEILPR	1(NUMERIC)5 + ''.'' + 2(NUMERIC)2.	Positive number with 2 decimals.	Ceiling price of the Service as entered by the Transmission Provider.
COLUMN__HEADERS	HEADERS	1(ALPHANUMERIC) Limited to all the elements names in one Template.	Headers surrounded with A and separated by commas. Limited to valid Template element names. Must use full element name and not alias.	Example: COLUMN__HEADER= APATH__NAME'', ''POINT__OF__RECEIPT'', POINT__OF__DELIVERY'', ''SOURCE'', ''SINK''.
CONTINUATION__FLAG	CONT	1(ALPHANUMERIC)1	''Y'' OR ''N''	Indicates whether or not this record is a continuation from the previous record.
CONTROL__AREA	AREA	1(ALPHANUMERIC)20	Valid name of a control area.	A part of the power system with metered tie lines and capable of matching generation and load while meeting scheduled interchange. Location of Ancillary Services is my CONTROL__AREA.
CURTAILMENT__OPTIONS	CUROPT	1(ALPHANUMERIC)80	Free form text	Customer options, if any, to avoid curtailment.
CURTAILMENT__PROCEDURES.	CURPROC	1(ALPHANUMERIC)80	Free form text	Curtailment procedures to be followed in the event of a curtailment.
CURTAILMENT__REASON	CURREAS	1(ALPHANUMERIC)80	Free form text	Reason for curtailment of service.
CUSTOMER__CODE	CUST	1(ALPHANUMERIC)6	Unique value, registered on TSIN.COM.	Any entity (or its designated agent) that is eligible to view OASIS information, to execute a service agreement, and/or to receive transmission service.
CUSTOMER__COMMENTS	CUSTCOM	1(ALPHANUMERIC)80	Free-form text	Informative text.
CUSTOMER__DUNS	CUSTDUNS	9(NUMERIC)9	Unique DUNS number	Unique DUNS number for a Customer.
CUSTOMER__EMAIL	CUSTEMAIL	1(ALPHANUMERIC)25	Valid Internet E-Mail address.	Internet E-Mail address of Customer contact person.
CUSTOMER__FAX	CUSTEFAX	14(ALPHANUMERIC)20	Area code and telephone number, plus any extensions (aaa)-nnn-nnnn xnnnn.	Fax phone number of Customer contract person.
CUSTOMER__NAME	CUSTNAME	1(ALPHANUMERIC)25	Free form text	Name of Customer contract person.
CUSTOMER__PHONE	CUSTPHON	14(ALPHANUMERIC)20	Area code and telephone number, plus any extensions (aaa)-nnn-nnnn xnnnn.	Telephone of Customer contact person.
DATA__ROWS	ROWS	1(NUMERIC) unlimited	Positive Number	Number of records (rows) of data exclusive of header information that are to be uploaded or downloaded in a file.
DATE__TIME__EFFECTIVE	TIMEEFCT	16(ALPHANUMERIC)16	Valid date and time in seconds yyyy+mo+dd+hh +mm+ss+tz.	Date and time a message or service offer is in effect.
DATE__TIME__POSTED	TIMEPSTD	16(ALPHANUMERIC)16	Valid date and time in seconds yyyy+mo+dd+hh +mm+ss+tz.	Date and time to seconds a message or service offered was posted.
DEAL__REF	DREF	1(ALPHANUMERIC) 12	Unique value, Assigned by Customer.	The unique reference assigned by a Customer to two or more service purchases to identify each of them as related to others in the same power service deal. These requests may be related to each other in time sequence through a single Provider, or as a series of wheels through multiple Providers, or a combination of both time and wheels. The User uses the DEAL__REF to uniquely identify a combination of requests relating to a particular deal.
DISCRETION__DESCRIPTION.	DISCDESC	0(ALPHANUMERIC)1000	Free form text	A detailed description of the discretion being reported.

Data dictionary element name	Alias	Field format: minimum characters (type of ASCII) maximum characters	Restricted values	Definition of data element
ELEMENT__NAME	ELEMENT	1(ALPHANUMERIC)40	Valid Template element name.	Template element name as indicated in data dictionary.
EMPLOYEE__NAME	EMPNAME	1(ALPHANUMERIC)25	Free form text	Name of person who is transferring from one position to another.
ERROR__MESSAGE	ERROR	1(ALPHANUMERIC)250	Free form text	Error message related to a RECORD__STATUS or REQUEST__STATUS.
FORMER__COMPANY	FORMCO	1(ALPHANUMERIC)25	Free form text	Former company of the person who is transferring.
FORMER__DEPARTMENT	FORMDEPT	1(ALPHANUMERIC)25	Free form text	Former department of the person who is transferring.
FORMER__POSITION	FORMPOS	1(ALPHANUMERIC)25	Free form text	Former position held by the person who is transferring.
INTERFACE__TYPE	INTERFACE	1(ALPHANUMERIC)1	I,E	Type of interface define by path: Internal (I) to a control area or External (E) to a control area.
LIST__ITEM	ITEM	1(ALPHANUMERIC)50	Free form text	Item from list, such as list of SELLERs, list of PATHs, list of PORs, list of PODs, Lists of SERVICE__INCREMENT, TS__CLASS, TS__TYPE, TS__PERIOD, NERC__CURTAILMENT__PRIORITY, OTHER__CURTAILMENT__ PRIORITY, SERVICE__INCREMENT, CATEGORY List of TEMPLATEs.
LIST__ITEM__ DESCRIPTION.	ITEMDESC	0(ALPHANUMERIC)100	Free form text	A detailed description of the LIST__ITEM.
LIST__NAME	LIST	1(alphanumeric)25	LIST, SELLER, PATH, POR, POD, SERVICE__INCREMENT, TS__CLASS, TS__TYPE, TS__PERIOD, TS__SUBCLASS, ANCILLARY__SERVICE__TYPE, CATEGORY, TEMPLATE.	List of valid names for each of the types of lists. The minimum set of lists defined must be implemented.
MESSAGE	MSG	1(ALPHANUMERIC)200	Free form text	An informative text message.
NEGOTIATED__PRICE__FLAG.	NGPRIFLG	1(ALPHANUMERIC)1	H, L, or blank	Set to H if OFFER__PRICE is higher than the currently posted price; set to L if OFFER__PRICE is lower than the currently posted price.
NERC__CURTAILMENT__ PRIORITY.	NERCURT	1(NUMERIC)1	Integer 1–7	One of the NERC seven curtailment priorities, documented in LIST templat.
NEW__COMPANY	NEWCO	1(ALPHANUMERIC)25	Free form text	New company of the person who is transferring.
NEW__DATA	NEWDATA	1(ALPHANUMERIC)200	Any valid date element value.	For audit log, the new updated value of a Template data element after update.
NEW__DEPARTMENT	NEWDEPT	1(ALPHANUMERIC)25	Free form text	New department of the person who is transferring.
NEW__POSITION	NEWPOS	1(ALPHANUMERIC)25	Free form text	New position held by the person who is transferring.
OFFER__PRICE	OFFPR	1(NUMERIC)5 + ‘‘.’’ + 2(NUMERIC)2.	Positive number with 2 decimals.	The current offered price of a Service in dollars and cents. Used by the Seller to indicate the offering price.
OFFER__START__TIME	OFFSTIME	16(ALPHANUMERIC)16	Valid Date and Time to seconds: yyy+mo+dd+hh+mmm+ss+tz.	Start time of the window during which a Customer may request a discounted offer.
OFFER__ STOP__TIME	OFFSPTIME	16(ALPHANUMERIC)16	Valid Date and Time to seconds: yyyy+mo+dd+hh +mm+ss+tz	Stop time of the window during which a Customer may request a discounted offer. (Expiration time of an offer).
OLD__DATA	OLDDATA	1(ALPHANUMERIC)200	Any valid data element value.	For audit log, the old value of a Template data element prior to being updated. This element is not applicable in the audit log for transaction events.

Data dictionary element name	Alias	Field format: minimum characters (type of ASCII) maximum characters	Restricted values	Definition of data element
OPTIONAL__CODE	N/A	0(ALPHANUMERIC)25	Unique path name within region.	OPTIONAL__CODE—25 chars, unique for Path. If used for directionality, then the first 12 characters shall represent POR, followed by >->, followed by 12 characters which shall represent POD. Used by PATH__NAME.
OTHER__CURTAILMENT __PRIORITY.	OTHCUR	0(ALPHANUMERIC)8	Free form tect	Other than NERC curtailment priorities, such as regional curtailment priorities. Suggested format region+number, for example MAPP4, WSCC7. Documented in LIST template.
OUTPUT__FORMAT	FMT	4(ALPHANUMERIC)4	HTML, DATA	Format of response: HTML = hypertext markup language for presentation using a web browser DATA = text for use in a downloaded file.
PATH__CODE	N/A	0(ALPHANUMERIC)12	Unique code for each path as defined by primary provider.	Unique code within a Region for each path. Used by PATH__NAME.
PATH__NAME	PATH	5(ALPHANUMERIC)50	Unique value	The unique name assigned to a single transmission line or the set of one or more parallel transmission lines whose power transfer capabilities are strongly interrelated and must be determined in aggregate. These lines are typically described as being on a path, corridor or interconnection in some regions, or as crossing an interface or cut-plane in other regions. Multiple lines may be owned by different parties and require prorating of capability shares. The name is constructed from the following codes, with each code separated by a ''/''. Trailing ''/'' may be omitted, if there are no values for OPTION__CODE and SPARE__CODE: REGION__CODE—2 chars, unique to OASIS System PRIMARY__PROVIDER__CODE—4 chars, unique within Region PATH__CODE—12 chars, unique for Primary Provider OPTIONAL__CODE—25 chars, unique for Path. If used for directionality, then the first 12 characters shall represent POR, followed by >->, followed by 12 characters which shall represent POD SPARE__CODE—3 chars.
POINT__ OF__DELIVERY	POD	1(ALPHANUMERIC)12	Unique value within Primary Provider.	Point of Delivery is one or more point(s) of interconnection on the Transmission Provider's transmission system where capacity and/or energy transmitted by the Transmission Provider will be made available to the Receiving Party. This is used along with Point of Receipt to define a Path and direction of flow on that path. For internal paths, this would be a specific location(s) in the area. For an external path, this may be an area-to-area interface.

Data dictionary element name	Alias	Field format: minimum characters (type of ASCII) maximum characters	Restricted values	Definition of data element
POINT__OF __RECEIPT	POR	1(ALPHANUMERIC)12	Unique value within Primary Provider.	Point of Receipt is one or more point(s) of interconnection on the Transmission Provider's transmission system where capacity and/or energy transmitted will be made available to the Transmission Provider by the Delivering Party. This is used along with Point of Delivery to define a Path and direction of flow on that path. For internal paths, this would be a specific location(s) in the area. For an external path, this may be an area-to-area interface.
POSTING__NAME	POSTNAME	1(ALPHANUMERIC)25	Free form text	Name of person who is posting the information on the OASIS.
POSTING__REF	POSTREF	1(ALPHANUMERIC)12	Unique Value	Assigned by TSIP when Service or Message is received by TSIP. Unique number can be used by the user to modify or delete the posting.
PRECONFIRMED	PRECONF	2(ALPHA)3	YES or NO	Used by Customer to preconfirm sale in Template transrequest or ancrequest. If customer indicates sale is preconfirmed, then the response is YES and the customer does not need to confirm the sale.
PRICE__UNITS	UNITS	1(ALPHA)20	Free form text	The units used for CEILING__PRICE, OFFER__PRICE, and BID__PRICE. Examples: $/MWhr, $/MWmonth
PRIMARY__ PROVIDER__COMMENTS.	PPROVCOM	1(ALPHANUMERIC)80	Free form text	Informative text. Usually entered by the Primary Provider through a back end system.
PRIMARY__ PROVIDER__CODE.	PROVIDER	1(ALPHANUMERIC)4	Unique code	Unique code for each Primary Provider. Used by PATH__NAME and in URL. Registered as part of URL at www.tsin.com.
PRIMARY__ PROVIDER__DUNS.	PPROV-DUNS	9(NUMERIC)9	Valid DUNS number	Unique code for each Primary. Provided by Dun and Bradstreet.
REASSIGNED__ CAPACITY	RASCAP	1(NUMERIC)12	Positive number, cannot exceed previous assigned capacity.	The amount of transfer capability that was reassigned from one entity to another.
REASSIGNED__ REF	REREF	1(ALPHANUMERIC)12	Unique value	When customer makes a purchase of a transmission service that was posted for resale and a new ASSIGNMENT__REF number is issued the previous ASSIGNMENT__REF number now becomes the REASSIGNMENT__REF. Also used by SELLER when posting transmission or ancillary services for resale to show the previous assignment reference number. Also used by the customer when making a request to use FIRM service as NON-FIRM over alternate points of delivery.
REASSIGNED__START__TIME.	RESSTIME	16(ALPHANUMERIC)16	Valid date and time to seconds: yyy+mo+dd+hh+tz	Beginning date and time of the reassigned transmission service.
REASSIGNED__STOP__TIME.	RESSPIME	16(ALPHANUMERIC)16	Valid date and time to hour: yyyy+mo+dd+hh+tz	Date and time of the end of the transmission service that is reassigned to another User.
RECORD__STATUS	REC-STATUS	1(NUMERIC)3	Error number	Record status indicating record was successful or error code if unsuccessful. 200=Successful

Data dictionary element name	Alias	Field format: minimum characters (type of ASCII) maximum characters	Restricted values	Definition of data element
REGION__CODE	N/A	1(ALPHANUMERIC)2	Unique within OASIS System.	Defined for NERC regions, with the following defined: E—ECAR. I—MAIN. S—SERC. T—ERCOT. A—MAPP. P—SPP. M—MAAC. N—NPCC. W—WSCC. Second character or digit reserved for subregion id as defined by each region.
REQUEST__REF	RREF	1(ALPHANUMERIC)12	Unique value	A reference uniquely assigned by a Customer to a request for service from a Provider.
REQUEST__STATUS	RSTATUS	1(NUMERIC)3	Error number	Message status indicating message was successful (if all RECORD__STATUS show success) or error code if any RECORD__STATUS showed unsuccessful. 200=Successful.
RESPONSE__TIME__LIMIT	RESPTL	16(ALPHANUMERIC)16	Valid date and time to seconds: yyyy+mo+dd+hh+mm+ss+tz	Date and time to seconds by when a response must be received from a Customer.
RESPONSIBLE__PARTY__NAME.	PARTNAME	1(ALPHANUMERIC)25	Free form text	The name of the person responsible for granting the discretion.
RETURN__TZ	TZ	2(ALPHANUMERIC)2	AD, AS, PD, PS, ED, ES, MD, MS, CD, CS, UT.	A time zone code, indicating the base time zone, and whether daylight saving time is to be used. This field may be set by a Customer in a query. Returned date and time data is converted to this time zone.
SALE__REF	SREF	1(ALPHANUMERIC)12	Unique value	Identifier which is set by seller (including Primary Provider) when posting a service for sale.
SELLER__CODE	SELLER	1(ALPHANUMERIC)6	Unique value	Organization name of Primary Provider or Reseller.
SELLER__COMMENTS	SELCOM	1(ALPHANUMERIC)80	Free form text	Informative text provided by the Seller.
SELLER__DUNS	SELDUNS	9[NUMERIC]9	Valid DUNS number	Unique Data Universal Numbering System provided by Dun and Bradstreet. Code for a Primary Provider or Seller.
SELLER__EMAIL	SELEMAIL	5[ALPHANUMERIC]60	Valid network reference	E-Mail address of Seller contact person.
SERVICE__INCREMENT	SRVINCR	1[ALPHANUMERIC]8	Valid increments • HOURLY • Daily • Weekly • Monthly • Yearly • [Registered]	The transmission service increments provided. Five are pre-defined, while additional increments can be used if they are registered on TSIN.COM and shown in the Provider's LIST template.
SELLER__FAX	SELFAX	14[ALPHANUMERIC]20	Area code and telephone number, plus any extensions Example: (aaa)-nnn-nnnn-xnnnn.	The fax telephone number for contact person at Seller.
SELLER__NAME	SELNAME	1[ALPHANUMERIC]25	Free form text	The name of an individual contact person at the Seller.
SELLER__PHONE	SELPHONE	14[ALPHANUMERIC]20	Area code and telephone number, plus any extensions (aaa)-nnn-nnnn xnnnn.	The telephone number of a contact person as a Seller.
SERVICE__DESCRIPTION	SVCDESC	1[ALPHANUMERIC]200	Free-form text	Information regarding a service.
SERVICE__NAME	SVCNAME	1[ALPHANUMERIC]25	Free-form text	Name of service affected by the discretionary action.
SERVICE__TYPE	SVCTYPE	1[ALPHANUMERIC]25	Free-form text	Type of service affected by the discretionary action.
SINK	SINK	0[ALPHANUMERIC]14	Valid area name	The area in which the SINK is located.

Data dictionary element name	Alias	Field format: minimum characters (type of ASCII) maximum characters	Restricted values	Definition of data element
SOURCE	SOURCE	0[ALPHANUMERIC]14	Valid area name	The area in which the SOURCE is located.
SPARE__CODE	N/A	0[ALPHANUMERIC]3	Defined by region	Spare code to be used at a later time. Used by PATH__NAME.
STANDARDS__OF__ CONDUCT__ISSUE.	STDISSUE	0[ALPHANUMERIC]200	Free-form text	Issues that were in violation of the FERC Standards of Conduct.
START__TIME	STIME	16[ALPHANUMERIC]16	Valid Date and Time to seconds: yyyy+mo+dd+hh +mm+ss+tz	Start date and clock time of a service. When used as a query variable, it requires the return of all items whose Stop time is after the Start time. Note that for some Templates when used as a query variable the time may be only valid up to the hour, day or month. If more data is given than is valid, the hour, day or month will be used to make the date and time inclusive, i.e. date or time will be truncated to valid hour, day or month.
START__TIME__POSTED	STIMEP	16[ALPHANUMERIC]16	Valid Date and Time to seconds: yyyy+mo+dd+hh +mm+ss+tz	Query parameter to indicate all the records are to be retrieved that were posted on or after this time.
START__TIME__QUEUED	STIMEQ	16[ALPHANUMERIC]16	Valid Date and Time to seconds: yyyy+mo+dd+hh +mm+ss+tz	Start date and clock time of a service, used for requesting transactions queued after this time.
STATUS	STATUS	5(ALPHANUMERIC)25	Valid field (QUEUED, RECEIVED, STUDY, REBID, OFFER, ACCEPTED, REFUSED, CONFIRMED, WITHDRAWN, DISPLACED, ANNULLED, RETRACTED).	QUEUED=initial status assigned by TSP on receipt of ''customer capacity purchase request''. RECEIVED=reassigned by TP to acknowledge QUEUED requests and indicate the service request is being evaluated. STUDY=assigned by TP to indicate some level of study is required or being performed to evaluate service request. OFFER=assigned by TP to indicate that a OFFER__PRICE is being proposed. REBID=assigned by TC to indicate a new BID__PRICE is being proposed. ACCEPTED=assigned by TP to indicate service request has been approved/accepted. If the reservation request was submitted PRECONFIRMED, OASIS shall immediately set the reservation status to CONFIRMED. Depending upon the type of ancillary services required, the Seller may or may not require all ancillary service reservations to be completed before accepting a request. REFUSED=assigned by TP to indicate service request has been denied, SELLER__COMMENTS should be used to communicate reason for denial of service. CONFIRMED=assigned by TC in response to TP posting ''ACCEPTED'' status to confirm service. WITHDRAWN=assigned by TC at any point in request evaluation to withdraw the request from any further action.

Data dictionary element name	Alias	Field format: minimum characters (type of ASCII) maximum characters	Restricted values	Definition of data element
				DISPLACED=assigned by TP when a ''CONFIRMED'' request from a TC is displaced by a longer term request and the TC has exercised right of first refusal (i.e. refused to match T&Cs of new request). ANNULLED=assigned by TP when, by mutual agreement with the TC, the transaction is to be voided. RETRACTED=assigned by TP when the TC fails to confirm or withdraw the transaction within the required time period.
STATUS__COMMENTS	STACOM	1(ALPHANUMERIC)80	Free form text	Informative text.
STATUS__NOTIFICATION	STATNOT	1(ALPHANUMERIC)200	http://URL:portnumber/director y/cgi script/query parameters or Mailto: <e-mail address.>.	The STATUS__NOTIFICATION data element shall contain the protocol field ''http:'', which designates the notification method/protocol to be used, followed by all resource location information required; the target domain name and port designations shall be inserted into the notification URL based on the Customer's Company registration information. The resource location information may include directory information, cgi script identifiers and URL encoded query string name/value pairs as required by the Customer's application, or mailto and email address for the status information the Customer wants to receive upon a change in STATUS of transstatus, or ancstatus.
STOP__TIME	SPTIME	16(ALPHANUMERIC)16	Valid date and time yyyy+mo+dd+hh+mm+ss+tz.	Stop date and clock time. When used as a query variable, it requires the return of all items which start before the Stop time. Note that for some Template when used as a query variable the time may be only valid up to the hour, day or month. If more data is given than is valid, the hour, day or month will be used to make the date and time inclusive, i.e. date or time will be increased to include STOP__TIME.
STOP__TIME__POSTED	STPTIMEP	16(ALPHANUMERIC)16	Valid date and time to seconds: yyyy+mo+dd+hh+mm+ss+tz.	Query parameter to indicate all the records are to be retrieved that were posted on or before this time.
STOP__TIME__QUEUED	SPTIMEQ	16(ALPHANUMERIC)16	Valid date and time to seconds: yyyy+mo+dd+hh+mm+ss+tz.	Stop date and clock time, used for requesting transactions queued before this time.
SUBJECT	SUBJ	1(ALPHANUMERIC)80	Free form text	Informative text used to summarize a topic in a message.
TARIFF__REFERENCE	TARIFF	1(ALPHANUMERIC)150	Free form text. Name and description of Tariff.	Tariffs approved by FERC.
TEMPLATE	TEMPL	1(ALPHANUMERIC)20	Valid Name of Template from Section 4.3 or from LIST Template.	The name of a logical collection of DATA__ELEMENTS in a User's interaction with an OASIS Node.
TIME__OF__LAST__UPDATE.	TLUPDATE	16(ALPHANUMERIC)16	Valid date and time to seconds: yyyy+mo+dd+hh+mm+ss+tz.	Date and time to seconds that data was last updated. May be used to search data updated since a specific point in time.
TIME__POSTED	TIMEPST	16(ALPHANUMERIC)16	Valid date and time to seconds: yyyy+mo+dd+hh+mm+ss+tz.	Date and time a message is posted.

Data dictionary element name	Alias	Field format: minimum characters (type of ASCII) maximum characters	Restricted values	Definition of data element
TIME__QUEUED	TIMEQ	16(ALPHANUMERIC)16	Valid date and time to seconds: yyyy+mo+dd+hh+mm+ss+tz.	Date and time that the request was queued.
TIME__STAMP	TSTAMP	16(ALPHANUMERIC)16	Valid date and time to seconds: yyyy+mo+dd+hh+mm+ss+tz.	Time data is created.
TS__CLASS	TSCLASS	1(ALPHANUMERIC)20	Valid classes: • FIRM • NON-FIRM • TTC • (Registered)	The transmission service classes provided. Three are predefined, while additional classes can be used if they are registered on TSIN.COM and shown in the Provider's LIST template page.
TS__PERIOD	TSPER	1(ALPHANUMERIC)20	Valid periods: ON__PEAK OFF__PEAK FULL__PERIOD (Registered)	The transmission service periods provided. Three are predefined, while additional periods can be used if they are registered on TSIN.COM and shown in the Provider's LIST template.
TS__SUBCLASS	TSSUBC	1(ALPHANUMERIC)20	Free form	The transmission service subclasses provided. These are free form.
TS__TYPE	TSTYPE	1(ALPHANUMERIC)20	Valid periods: • POINT__TO__POINT • NETWORK • (Registered)	The transmission service types provided. Two are predefined, while additional types can be used if they are registered on TSIN.COM and shown in the Provider's LIST template.
TS__WINDOW	TSWIND	1(ALPHANUMERIC)20	Valid periods: • FIXED • SLIDING • (Registered)	The transmission service windows provided. Two are predefined, while additional windows can be used if they are registered on TSIN.COM and shown in the Provider's LIST template.
TZ	TZ	2(ALPHANUMERIC)2	Valid time zone and indication whether daylight savings time is to be used.	Time zones: Atlantic time=AD, AS. Eastern time=ED, ES. Central time=CD, CS. Mountain time=MD, MS. Pacific time=PD, PS. Universal time=UT.
VALID__FROM__TIME	VALFTIME	16(ALPHANUMERIC)16	Valid time and date yyyy+mo+dd+hh+mm+ss+tz.	Date and time after which the message is valid.
VALID__TO__TIME	VALTTIME	16(ALPHANUMERIC)16	Valid date and time yyyy+mo+dd+hh+mm+ss+tz.	Date and time before which the message is valid.
VERSION	VER	1(REAL NUMBER)6	RANGE OF 1.0 TO 9999.9.	Specifies which version of the OASIS Standards and Communication Protocol to use when interpreting the request.

Note: This attachment will not appear in the Code of Federal Regulations.

Attachment 3—Standards and Communication Protocols for Open Access Same-Time Information System (OASIS) (With Revisions to OASIS How Working Group's September 23, 1997 Submittal Highlighted)

Version 1.2

May 27, 1998

Table of Contents

1. Introduction
    1.1 Definition of Terms
2. Network Architecture Requirements
    2.1 Architecture of OASIS Nodes
    2.2 Internet-Based OASIS Network
    2.3 Communication Standards Required
    2.4 Internet Tool Requirements
    2.5 Navigation and Interconnectivity Between OASIS Nodes
3. Information Access Requirements
    3.1 Registration and Login Requirements
    3.2 Service Level Agreements
    3.3 Access to Information
    3.4 Provider Updating Requirements
    3.5 Access to Changed Information
    3.6 User Interaction With an OASIS Node
4. Interface Requirements
    4.1 Information Model Concepts
    4.2 OASIS Node Conventions and Structures
        4.2.1 OASIS Node Naming Requirements
            4.2.1.1. OASIS Node Names
            4.2.1.2. OASIS Node and Primary Provider Home Directory
            4.2.1.3 CGI Script Names
        4.2.2 Data Element Dictionary
        4.2.3 OASIS Template Constructs
            4.2.3.1 Template Construction
            4.2.3.2 Template Categories
            4.2.3.3 Template HTML Screens
        4.2.4 Query/Response Template Requirements
            4.2.4.1 Query Requirements
            4.2.4.2 Response Requirements
        4.2.5 Input/Response Template Requirements
            4.2.5.1 Input Requirements
            4.2.5.2 Response to Input
        4.2.6 Query Variables
            4.2.6.1 General
            4.2.6.2 Standard Header Query Variables
            4.2.6.3 Responses to Queries
            4.2.6.4 Multiple Instances
            4.2.6.5 Logical Operations
            4.2.6.6 Handling of Time Data Elements
            4.2.6.7 Default Values
            4.2.6.8 Limitations on Queries
        4.2.7 CSV Format
            4.2.7.1 General Record Format
            4.2.7.2 Input Header Records
            4.2.7.3 Response Header Records
            4.2.7.4 Data Records
            4.2.7.5 Continuation Records
            4.2.7.6 Error Handling in CSV-Formatted Responses
        4.2.8 Registration Information
            4.2.8.1 General
            4.2.8.2 Company Information
            4.2.8.3 User Information
        4.2.9 Representation of Time
            4.2.9.1 General
            4.2.9.2 Input Time
            4.2.9.3 Output (Response) Time
        4.2.10 Transaction Process
            4.2.10.1 Purchase Transactions
            4.2.10.2 Status Values
            4.2.10.3 Dynamic Notification
                4.2.10.3.1 HTTP Notification
                4.2.10.3.2 E-mail Notification
        4.2.11 Reference Identifiers
        4.2.12 Linkage of Ancillary Services to Transmission Services
    4.3 Template Descriptions
        4.3.1 Template Summary
        4.3.2 Query/Response of Posted Services Being Offered

4.3.2.1 Transmission Capacity Offerings Available for Purchase (transoffering)
4.3.2.2 Ancillary Services Available for Purchase (ancoffering)
4.3.3 Query/Response of Services Information
4.3.3.1 Transmission Services (transserv)
4.3.3.2 Ancillary Services (ancserv)
4.3.4 Query/Response of Schedules and Curtailments
4.3.4.1 Hourly Schedule (schedule)
4.3.4.2 Curtailment/Interruption (curtail)
4.3.5 Query/Response of Lists of Information
4.3.5.1 List (list)
4.3.6 Query/Response to Obtain the Audit log
4.3.6.1 Audit Log Information (auditlog)
4.3.7 Purchase Transmission Services
4.3.7.1 Customer Capacity Purchase Request (transrequest)
4.3.7.2 Status of Customer Purchase Request (transstatus)
4.3.7.3 Seller Approval of Purchase (transsell)
4.3.7.4 Customer Confirmation of Purchase (Input) (transcust)
4.3.7.5 Alternate Point of Receipt/Delivery (transalt)
4.3.7.6 Seller to Reassign Service Rights to Another Customer (transassign)
4.3.8 Seller Posting of Transmission Services
4.3.8.1 Seller Capacity Posting (transpost)
4.3.8.2 Seller Capacity Modify (transupdate)
4.3.9 Purchase of Ancillary Services
4.3.9.1 Customer Requests to Purchase Ancillary Services (ancrequest)
4.3.9.2 Ancillary Services Status (ancstatus)
4.3.9.3 Seller Approves Ancillary Service (ancsell)
4.3.9.4 Customer accepts Ancillary Service (anccust)
4.3.10 Seller Posting of Ancillary Services
4.3.10.1 Seller Ancillary Services Posting (ancpost)
4.3.10.2 Seller Modify Ancillary Services Posting (ancupdate)
4.3.11 Informal Messages
4.3.11.1 Provider/Customer Want Ads and Informal Message Posting Request (messagepost)
4.3.11.2 Message (message)
4.3.11.3 Provider/Sellers Message Delete Request (messagedelete)
4.3.11.4 Personnel Transfers (personnel)
4.3.11.5 Discretion (discretion)
4.3.11.6 Standards of Conduct (stdconduct)
4.4 File Request and File Download Examples
4.4.1 File Example for Hourly Offering
4.4.2 File Example for Hourly Schedule Data
4.4.3 Customer Posting a Transmission Service Offering
4.4.4 Example of Re-aggregating Purchasing Services using Reassignment
4.4.5 File Examples of the Use of Continuation Records
4.4.6 Example of Negotiation of Price
4.4.6.1 Negotiation with Preconfirmation
4.4.6.2 Negotiations without Preconfirmation
4.4.6.3 Multiple Step Negotiations
4.4.6.4 Negotiations Refused by Seller
4.4.6.5 Negotiations Withdrawn by Customer
4.5 Information Supported By Web Page
5. Performance Requirement
5.1 Security
5.2 Access Privileges
5.3 OASIS Response Time Requirements
5.4 OASIS Provider Account Availability
5.5 Backup and Recovery
5.6 Time Synchronization
5.7 TS Information Timing Requirements
5.8 TS Information Accuracy
5.9 Performance Auditing
5.10 Migration Requirements
Appendix A—Data Element Dictionary

1. Introduction

1.1 Definition of Terms

The following definitions are offered to clarify discussions of the OASIS in this document.

a. *Transmission Services Information (TS Information)* is transmission and ancillary services information that must be made available by public utilities on a non-discriminatory basis to meet the regulatory requirements of transmission open access.

b. *Open Access Same-Time Information System (OASIS)* comprises the computer systems and associated communications facilities that public utilities are required to provide for the purpose of making available to all transmission users comparable interactions with TS Information.

c. *Open Access Same-Time Information System Node (OASIS Node)* is a subsystem of the OASIS. It is one computer system in the (OASIS) that provides access to TS Information to a Transmission Customer.

d. *Transmission Provider (TP or Primary Provider)* is the public utility (or its designated agent) that owns, operates or controls facilities used for the transmission of electric energy in interstate commerce. (This is the same term as is used in Part 35.3).

e. *Transmission Customer (TC or Customer)* is any eligible Customer (or its designated agent) that can or does execute a transmission service agreement or can or does receive transmission service. (This is the same term as is used in Part 35.3).

f. *Secondary Transmission Provider (ST, Reseller, or Secondary Provider)* is any Customer who offers to sell transmission capacity it has purchased. (This is the same as Reseller in Part 37).

g. *Transmission Services Information Provider (TSIP)* is a Transmission Provider or an agent to whom the Transmission Provider has delegated the responsibility of meeting any of the requirements of Part 37. (This is the same as Responsible Party in Part 37).

h. *Value-Added Transmission Services Information Provider (VTSIP)* is an entity who uses TS Information in the same manner as a Customer and provides value-added information services to its Customers.

2. Network Architecture Requirements

2.1 Architecture of Oasis Nodes

a. Permit Use of Any OASIS Node Computers: TSIPS shall be permitted to use any computer systems as an OASIS Node, so long as they meet the OASIS requirements.

b. Permit Use of Any Customer Computers: OASIS Nodes shall permit the use by Customers of any commonly available computer systems, as long as they support the required communication links to the Internet.

c. Permit the Offering of Value-Added Services: TSIPs are required, upon request, to provide their Customers the use of private network connections on a cost recovery basis. Additional services which are beyond the scope of the minimum OASIS requirements are also permitted. When provided, these private connections and additional services shall be offered on a fair and non-discriminatory basis to all Customers who might choose to use these services.

d. Permit Use of Existing Communications Facilities: In implementing the OASIS, the use of existing communications facilities shall be permitted. The use of OASIS communication facilities for the exchange of information beyond that required for open transmission access (e.g., transfer of system security or operations data between regional control centers) shall also be permitted, provided that such use does not negatively impact the exchange of open transmission access data and is consistent with the Standards of Conduct in Part 37.

e. Single or Multiple Providers per Node: An OASIS Node may support a single individual Primary Provider (plus any Secondary Providers) or may support many Primary Providers.

2.2 Internet-Based OASIS Network

a. Internet Compatibility: All OASIS Nodes shall support the use of internet tools, internet directory services, and internet communication protocols necessary to support the Information Access requirements stated in Section 4.

b. Connection through the Public Internet: Connection of OASIS Nodes to the public Internet is required so that Users may access them through Internet links. This connection shall be made through a firewall to improve security.

c. Connection to a Private Internet Network: OASIS Nodes shall support private connections to any OASIS User (User) who requests such a connection. The TSIP is permitted to charge the User, based on cost, for these connections. The same internet tools shall be required for these private networks as are required for the public Internet. Private connections must be provided to all users on a fair and nondiscriminatory basis.

d. Internet Communications Channel: The OASIS Nodes shall utilize a communication channel to the Internet which is adequate to support the performance requirements given the number of Users subscribed to the Providers on the Node (see section 5.3).

2.3 Communication Standards Required

a. Point-to-Point Protocol (PPP) and Internet Protocol Control Protocol (IPCP) (reference RFCs 1331 and 1332) shall be supported for private internet network dial-up connections.

b. Serial Line Internet Protocol (SLIP) (reference RFC 1055) shall be supported for private internet network dial-up connections.

c. Transport Control Protocol and Internet Protocol (TCP/IP) shall be the only protocol set used between OASIS Nodes whenever they are directly interconnected, or between OASIS Nodes and Users using private leased line internet network connections.

d. Hyper Text Transport Protocol (HTTP), Version 1.0 (RFC 1945), shall be supported by User's web browsers so they can use it to select information for viewing displays and for downloading and uploading filed electronically.

e. Internet Protocol Address: All OASIS Nodes are required to use an IP address registered with the Internet Network Information Center (InterNIC), even if private connections are used.

2.4 Internet Tool Requirements

Support for the following specific internet tools is required, both for use over the public Internet as well as for any private connections between Users and OASIS Nodes:

a. Hypertext Markup Language (HTML), at least Version 3.2 shall be used by supported by User's browsers as a standard tool for viewing information.

b. HTML Forms shall be provided by the TSIPs to allow Customers to enter information to the OASIS Node.

c. Domain Name Service (DNS) (ref. RFC 1034, 1035) shall be provided as a minimum by the TSIPs (or their Internet Service Provider) for the resolution of IP addresses to allow Users to navigate easily between OASIS Nodes.

d. Simple Network Management Protocol (SNMP) is recommended but not required to provide tools for operating and managing in network. If private interconnections between OASIS Nodes are established.

e. The Primary Provider shall support E-mail for exchanges with Customers, including the sending of attachments. The protocols supported shall include, as a minimum, the Simple Messaging Transfer Protocol (SMTP), Post Office Protocol (POP), and Multipurpose Internet Mail Extensions (MIME).

2.5 Navigation and Interconnectivity Between OASIS Nodes

a. World Wide Web Browsers: TSIPs shall permit Users to navigate using WWW browsers for accessing different sets of TS Information from one Provider, or for getting to TS Information from different Providers on the same OASIS Node. These navigation methods shall not favor User access to any Provider over another Provider, including Secondary Providers.

b. Internet Interconnection across OASIS Nodes: Navigation tools shall not only support navigation within the TSIP's Node, but also across interconnected OASIS Nodes. This navigation capability across interconnected Nodes shall, as a minimum, be possible through the public Internet.

3. Information Access Requirements

3.1 Registration and Login Requirements

a. Location of Providers: To provide Users with the information necessary to access the desired Provider, all Primary Providers shall register their OASIS Node URL address with www.tsin.com. This URL address should include the unique four letter acronym the Primary Provider will use as the PRIMARY__PROVIDER__CODE.

b. Initial User Registration: TSIPs shall require Users to register with a Primary Provider before they are permitted to access the Provider's TS Information. There must be a reference pointing to registration procedures on each Primary Provider's home page. Registration procedures may vary with the administrative requirements of each Primary provider.

c. Initial Access Privileges: Initial registration shall permit a User only the minimum Access Privileges. A User and a Primary Provider shall mutually determine what access privilege the User is permitted. The TSIP shall set a User's Access Privilege as authorized by the Primary Provider.

d. User Login: After registration, Users shall be required to login every time they establish a dial-up connection. If a direct, permanent connection has been established, Users shall be required to login initially or any time the connection is lost. Use of alternative forms of login and authentication using certificates and public key standards is acceptable.

e. User Logout: Users shall be automatically logged out any time they are disconnected. Users may logout voluntarily.

3.2 Service Level Agreements

Service Level Agreements: It is recognized that Users will have different requirements for frequency of access, performance, etc., based on their unique business needs. To accommodate these differing requirements, TSIPs shall be required to establish a ''Service Level Agreement'' with each User which specifies the terms and conditions for access to the information posted by the Providers. The default Service Level Agreement shall be Internet access with the OASIS Node meeting all minimum performance requirements.

3.3 Access to Information

a. Display: TSIPs shall format all TS Information in HTML format such that it may be viewed and read directly by Users without requiring them to download it. This information shall be in clear English as much as possible, with the definitions of any mnemonics or abbreviations available on-line. The minimum information that is to be displayed is provided in the Templates in Section 4.3.

b. Read-Only Access to TS Information: For security reasons, Users shall have read-only access to the TS Information. They shall not be permitted to enter any information except where explicitly allowed, such as HTML transaction request forms or by the Templates in Section 4.3.

c. Downloading Capability: Users shall be able to download from an OASIS Node the TS Information in electronic format as a file. This rules for formatting of this data are described in Section 4.2.

d. On-Line Data Entry on Forms: Customers shall be permitted to fill out on-line the HTML forms supplied by the TSIPs, for requesting the purchase of services and for posting of products for sale (by Customers who are resellers). Customers shall also be permitted to fill-out and post Want-Ads.

e. Uploading Capability: Customers shall be able to upload to OASIS Nodes the filled-out forms. TSIPs shall ensure that these uploaded forms are handled identically to forms filled out on-line. TSIPs shall provide forms that support the HTTP input of Comma Separated Variable (CSV) records. This capability shall permit a Customer to upload CSV records using standard Web browsers or additional client software (such as fetch__http) to specify the location of the CSV records stored on the Customer's hard disk.

f. Selection of TS Information: Users shall be able to dynamically select the TS Information they want to view and/or download. This selection shall be, as a minimum, through navigation to text displays, the use of pull-down menus to select information for display, data entry into forms for initiating queries, and the selection of files to download via menus.

3.4 Provider Updating Requirements

The following are the Provider update requirements:

a. Provider Posting of TS Information: Each Provider (including Secondary Providers and Value-Added Providers) shall be responsible for writing (posting) and updating TS Information on their OASIS Node. No User shall be permitted to modify a Provider's Information.

b. Info.HTM: Each Provider shall provide general information on how to use their node and describe all special aspects, such as line losses, congestion charges and assistance. The address for the directory of this information shall be INFO.HTM, an HTML web page, linked to the Provider's registered URL ADDRESS.

c. OASIS Node Space for Secondary Provider: To permit Users to readily find TS Information for the transmission systems that they are interested in, TSIPs shall provide database space on their OASIS Node for all Secondary Providers

who have purchased, and who request to resell, transmission access rights for the power systems of the primary Providers supported by that Nod.

d. Secondary Provider Posting to Primary Provider Node: The Secondary providers shall post the relevant TS Information on the OASIS Node associated with each Primary Provider from whom the transmission access rights were originally purchased.

e. Secondary Provider Posting Capabilities: The TSIPs shall ensure that the Secondary Providers shall be able to post their TS Information to the appropriate OASIS Nodes using the same tools and capabilities as the Customers, meet the same performance criteria as the Primary Providers, and allow users to view these postings on the same display page, using the same tables, as similar capacity being sold by the Primary Providers.

f. Free-Form Posting of non-TS Information: The TSIP shall ensure that non-TS Information, such as Want-Ads, may be posted by providers and Customers, and that this information is easily accessible by all Users. The TSIP shall be allowed to limit the volume and/or to charge for the posting of non-TS Information.

g. Time Stamps: All TS Information shall be associated with a time stamp to show when it was posted to the OASIS Node.

h. Transaction Tracking by an Assignment Reference Number: All requests for purchase of transmission or ancillary services will be marked by a unique accounting number, called an assignment reference.

i. Time-Stamped OASIS Audit Log: All posting of TS Information, all updating of TS Information, all User logins and disconnects, all User download requests, all Service Requests, and all other transactions shall be time stamped and stored in an OASIS Audit Log. This OASIS Audit Log shall be the official record of interactions, and shall be maintained on-line for download for at least 90 days. Changes in the values of posted Capacity (Available Transfer Capability) must be stored in the on-line Audit Log for 20 days. Audit records must be maintained for 3 years off-line and available in electronic form within seven days of a Customer request.

j. Studies: A summary description with dates, and programs used of all transmission studies used to prepare data for the Primary Provider's ATC and TTC calculation will be provided along with information as to how to obtain the study data and results.

3.5 Access to Changed Information

a. General Message & Log: TSIPs shall post a general message and log that may be read by Users. The message shall state that the Provider has updated some information, and shall contain (or point to) a reverse chronological log of those changes. This log may be the same as the Audit Log. The User may use the manual capability to see the message.

b. TSIP Notification Design Responsibilities: The TSIP shall avoid a design that could cause serious performance problems by necessitating frequent requests for information from many Users.

3.6 User Interaction with an OASIS Node

There are three basic types of User interactions which must be supported by the OASIS Node. These interactions are defined in Section 4.3.

a. Query/Response: The simplest level of interactions is the query of posted information and the corresponding response. The User may determine the scope of the information queried by specifying values, through an HTML form, a URL string, or an uploaded file, using Query Variables and their associated input values as defined with each Template in Section 4.3. The response will be either an HTML display or a record oriented file, depending on the output format that the User requests.

The TSIP may establish procedures to restrict the size of the response, if an overly broad query could result in a response which degrades the overall performance of the OASIS Node for their Users.

b. Purchase Request: The second type of Customer interaction is the submittal of a request to purchase a service. The Customer completes an input form, a URL string or uploads a file and submits it to the OASIS Node. The uploaded file can either be a series of query variables or a record oriented file.

The request is processed by the Seller of the service, possibly off-line from the OASIS Node, and the status is updated accordingly.

If a purchase request is approved by the Seller, then it must be again conformed by the Customer. Once the Customer confirms an approved purchase, a reservation for those services is considered to exist, unless later the reservation is reassigned, displaced, or annulled.

c. Upload and Modify Postings: Customers who wish to resell their rights may upload a form, create the appropriate URL or upload a file to post services for sale. A similar process applies to eligible Third Party Sellers of ancillary services. The products are posted by the TSIP. The seller may monitor the status of the services by requesting status information. Similarly the Seller may modify its posted transmission services by submitting a service modification request through a form, a URL query, or by uploading a file.

4. Interface Requirements

4.1 Information Model Concepts

a. ASCII-Based OASIS Templates: For providing information to Users, TSIPs shall use the specified OASIS Templates. These Templates define the information which must be presented to Users, both in the form of graphical displays and as downloaded files. Users shall be able to request Template information using query-response data flows. The OASIS Templates are described in section 4.3. The Data Element Dictionary, which defines the data elements in the OASIS Templates, is provided in Appendix A.

Data elements must be used in the exact sequence and number as shown in the Templates when file uploads and downloads are used. Although the contents of the graphical displays are precisely defined as the same information as in the Templates, the actual graphical display formats of the TS information are beyond the scope of the OASIS

requirements. Due to the nature of graphical displays, there may be more than one graphical display used to convey the information in a single Template.

b. ASCII-Based OASIS File Structures: For uploading requests from and downloading information to Users, TSIPs shall use specific file structures that are defined for OASIS Template information (see section 4.2). These file structures are based on the use of headers which contain the Query Variable information, including the name of the OASIS Template. These headers thus determine the contents and the format of the data that follows. Although headers may not be essential if file transfers contain the exact sequence and number of data elements as the Templates, this feature is being preserved for possible future use when additional flexibility may be allowed.

4.2 OASIS Node Conventions and Structures

4.2.1 OASIS Node Naming Requirements

The following naming conventions shall be used to locate information posted on OASIS. OASIS naming conventions shall conform to standard URL structures.

4.2.1.1 OASIS Node Names

In order to provide a consistent method for locating an OASIS Node, the standard Internet naming convention shall be used. All OASIS Node names shall be unique. Each Primary Provider OASIS Node name and home directory shall be registered with the master OASIS directory site at http://www.tsin.com. OASIS Node names shall be stored in an Internet DNS name directory.

4.2.1.2 OASIS Node and Primary Provider Home Directory

The home directory name on an OASIS Node shall be ''OASIS'' to identify that the directory is related to the OASIS. The directory of each Primary Provider shall be listed under the ''OASIS'' directory:

http://(OASIS Node name)/OASIS/(PRIMARY__PROVIDER__CODE)

Where:

(OASIS Node name) is the World Wide Web URL address of the OASIS Information Provider.

(PRIMARY__PROVIDER__CODE) is the 4 character acronym of the primary provider.

PRIMARY__PROVIDER__CODEs shall be registered with the master OASIS directory site at http://www.tsin.com. A pointer to user registration information shall be located on the Primary Provider's home page.

4.2.1.3 CGI Script Names

Common Gateway Interface (CGI) scripts shall be located in the directory ''data'' as follows:

http://(OASIS Node name)/OASIS/(PRIMARY__PROVIDER__CODE/data/(cgi script name)?(query variables)

Where:

(cgi script name) is the OASIS Template name (see Section 4.3). Other cgi scripts may be defined as required to implement the HTML interface to the documented templates. (query variables) is a list of query variables with their settings formatted as defined by the HTTP protocol (i.e., URL encoded separated by ampersands).

Example:

To request the hourly schedule Template at Primary Provider WXYZ Co.

http://www.wxy.com/oasis/wxyz/data/schedule ?templ=schedule& ver=1.2&fmt=data & stime=19960412040000PD &sptime=19960412100000PD& pprov=wxyz

4.2.2 Data Element Dictionary

The following are the requirements for the Data Element Dictionary:

a. Definition of OASIS Information Elements: All OASIS Information data elements shall be defined in the Data Element Dictionary which will be stored in the OASIS Node directory:

http://(OASISNode Name)/OASIS/(PRIMARY__PROVIDER__CODE)/ (datadic.html datadict.txt)

Where:

datadic.html is the HTML version of the data element dictionary

datadic.txt is the ASCII text version of the data element dictionary

The Data Element Dictionary is defined in Appendix A.

b. Provider-specific Data Element Values: The valid values that certain OASIS Information data elements may take on, such as PATH__NAME, etc., are unique to a Primary Provider. Names which must be uniquely identified by Primary Provider shall be listed on-line on the OASIS Node via the LIST Template (see Section 4.3.5). In posting OASIS information associated with data elements which are not free-form text, TSIPs shall use only the accepted data element values listed in the Data Element Dictionary and/or those values posted in the LIST of provider specific names provided on the OASIS.

4.2.3 OASIS Template Constructs

4.2.3.1 Template Construction

Section 4.3 lists the set of OASIS Templates that shall be supported by all OASIS nodes. These OASIS Templates are intended to be used precisely as shown for the transfer of data to/from OASIS, and identify, by Data Elements names, the information to be transferred. The construction of the OASIS Templates shall follow the rules described below:

a. Unique OASIS Template Name: Each type of OASIS Template shall be identified with a unique name which shall be displayed to the User whenever the OASIS Template is accessed.

b. Transfer Protocol: OASIS Templates are transferred using the HTTP protocol. Templates shall support both the ''GET'' and ''POST'' methods for transferring ''query string'' name/value pairs, as well as the OASIS specific ''comma

separated value'' (CSV) format for posting and retrieval of information from OASIS. HTML screens and forms shall be implemented for each OASIS Template.

c. Source Information: Each OASIS Template shall identify the source of its information by including or linking to the name of the Primary Provider, the Secondary Provider, or the Customer who provided the information.

d. Time Of Last Update: Each OASIS Template shall include a time indicating when it was created or whenever the value of any Data Element was changed.

e. Data Elements: OASIS Templates shall define the elementary Data Element Dictionary names for the data values to be transferred or displayed for that Template.

f. Documentation: OASIS Information shall be in non-cryptic English, with all mnemonics defined in the Data Element Dictionary or a glossary of terms. TSIPs shall provide on-line descriptions and help screens to assist Users understanding the displayed information. Documentation of all formats, contents, and mnemonics shall be available both as displays and as files which can be downloaded electronically. In order to meet the ''User-Friendly'' goal and permit the flexibility of the OASIS to expand to meet new requirements, the OASIS Templates shall be as self-descriptive as possible.

4.2.3.2 Template Categories

OASIS Templates are grouped into the following two major categories:

a. Query/Response: These Templates are used to query and display information posted on OASIS. Each query/response Template accepts a set of user specified Query Variables and returns the appropriate information from data posted on OASIS based on those query variables. The valid Query Variables and information to be returned in response are identified by Data Element in Section 4.3.

b. Input/Response: These Templates are used to upload/input information on OASIS. The required input information and information to be returned in response are identified by Data Element in Section 4.3, Template Descriptions.

4.2.3.3 Template HTML Screens

Though the exact form and content of the HTML screens and forms associated with the OASIS Templates are not dictated by this document, the following guidelines shall be adhered to for all HTML screens and forms implemented on OASIS:

a. Data Element Headings: Data displayed in an HTML screen/form shall be labeled such that the associated data value(s) is(are) easily and readily identifiable as being associated with a particular OASIS Template Data Element. HTML ''Hot-Links'' or other pointer mechanisms may be provided for Data Element headings in OASIS Templates which permit the User to access documentation describing the meaning, type, and format of the associated data.

b. Display Limitations: HTML screens and forms shall be implemented in such a way to allow the display of all data specified for each OASIS Template. This may take the form of ''wrapping'' of lines of information on the screen, the use of horizontal and/or vertical scrolling, or the use of ''Hot-Links'' or other pointer mechanisms. There is not necessarily a one-to-one relationship between OASIS implemented HTML screens and their associated Template. However, all Template data elements shall be viewable through one or more HTML screens.

c. Template Navigation: HTML ''Hot-Links'' or other pointer mechanisms may be provided to assist the navigation between screens/forms associated with related OASIS Templates.

4.2.4 Query/Response Template Requirements

Retrieval of information posted on OASIS is supported by the Query/Response Templates. The ''query'' identifies the OASIS Template and optionally supplies additional Data Elements which may be used to select specific information to be returned in the ''response''.

4.2.4.1 Query Requirements

Query information is transferred to OASIS using the HTTP protocol as a string of Query Variables in the form of name/value pairs. Query Variable name/value pairs are specified as a collection of encoded strings (e.g., blank characters replaced by plus (+) character, etc.) in the form of name=value, with each name/value pair separated by ampersands (&) (see section 4.2.6). OASIS shall support the following methods for Users to input Query information:

a. HTML: HTML FORM input and/or hypertext links shall be provided to allow Users to specify OASIS Template Query Variables. This will be the easiest way to obtain information and should be the choice of most casual Users and for simple reasons. The exact nature and form of these HTML screens are not specified, and may differ between OASIS nodes.

b. GET Method: The HTTP GET method for specifying query information appended to a standard OASIS URL shall be supported. Using this method, the name=value formatted Query Variables preceded by a question mark (?) are appended to the URL. Each ''name'' in a name/value pair corresponds to a Data Element name associated with that Template. OASIS shall support the specification of all Data Elements associated with a Template by both their full name and alias as defined in the Data Dictionary. The ''value'' in a name/value pair represents the value to be associated with the Data Element being specified in the appropriate format as defined in the Data Dictionary and encoded according to the HTTP protocol.

c. POST Method: The HTTP POST method for specifying query information in the message body shall be supported. Using this method, the name=value formatted Query Variables shall be transferred to OASIS using the ''Content-length:'' HTTP header to define the length in bytes of the encoded query string and the ''Content-type: application/x-www-form-urlencoded'' HTTP header to identify the data type included in the message body. Each ''name'' in a name/value pair corresponds to a Data Element name associated with that Template. OASIS shall support the specification of all Data Elements associated with a Template by both their full name and alias as defined in the Data Dictionary. The ''value'' in a name/value pair represents the value to be associated with the Data Element being specified in the appropriate format as defined in the Data Dictionary and encoded according to the HTTP protocol.

Using queries using any of the above methods are supported directly by the User's web browser software. More sophisticated data transfer mechanisms, such as the automated querying of information based on Query Variable strings

contained in a User data file (i.e., ''uploading a file containing a URL string), require appropriate software (e.g., ''fetch__http'') running on the User's computer system to effect the data transfer.

4.2.4.2 Response Requirements

In response to a validly formatted Query for each Query/Response OASIS Template, the OASIS shall return the requested information in one of two forms based on the User specified OUTPUT__FORMAT Query Variable:

a. HTML: If the User requests the response to have the format of ''HTML'' (OUTPUT__FORMAT=HTML) then the response from the OASIS shall be a web page using the HTML format. This shall be the default for all Query/Response Templates.

b. CSV Format: Comma Separated Value (CSV) format (OUTPUT__FORMAT=DATA) returns the requested information in the body of the HTTP response message. The ''Content-length:'' HTTP header shall define the length in bytes of the response, and the ''Content-type: text/x-oasis-csv'' HTTP header shall be used to identify the data type included in the message body (see CSV File Format).'

4.2.5 Input/Response Template Requirements

The posting of information on OASIS, including reservations for transmission/ancillary service, services for sale on the secondary market, etc., is supported by the Input/Response Templates. The ''input'' identifies the required data associated with an OASIS Template to be posted on OASIS, and the ''response'' specifies the information returned to the User.

4.2.5.1 Input Requirements

Input information is transferred to OASIS using the HTTP protocol as either a string of Query Variables in the form of name/value pairs, or as a Comma Separated Value (CSV) message. Query Variable name/value pairs are specified as a collection of encoded strings (e.g., blank characters replaced by plus (+) character, etc.) in the form of name=value, with each name/value pair separated by ampersands (&). CSV formatted messages are specified in the body of an HTTP message as a series of data records preceded by a fixed set of header records (see section 4.2.7).

OASIS shall support the following methods for Users to transfer Input data:

a. HTML: HTML FORM input shall be provided to allow Users to specify the necessary Input data associated with each Input/Response OASIS Template. This may be in the form of fill in blanks, buttons, pull-down selections, etc., and may use either the GET or POST methods. The exact nature and form of these HTML screens are not specified, and may differ between OASIS nodes.

b. GET Method: The HTTP GET method for specifying Input information in the form of a query string appended to a standard OASIS URL shall be supported. Using this method, the name=value formatted Query Variables preceded by a question mark (?) are appended to the URL. Each ''name'' in a name/value pair corresponds to a Data Element name associated with that Template. OASIS shall support the specification of all Data Elements associated with a Template by both their full name and alias as defined in the Data Dictionary. The ''value'' in a name/value pair represents the value to be associated with the Data Element being specified in the appropriate format as defined in the Data Dictionary and encoded according to the HTTP protocol.

c. POST Method: The HTTP POST method for specifying Input information in the form of a query string in the message body shall be supported. Using this method, the name=value formatted Query Variables shall be transferred to OASIS using the ''Content-length: ''HTTP header to define the length in bytes of the encoded query string and the ''Content-type: application/x-www-form-urlencoded'' HTTP header to identify the data type included in the message body. Each ''name'' in a name/value pair corresponds to a Data Element name associated with that Template. OASIS shall support the specification of all Data Elements associated with a Template by both their full name and alias as defined in the Data Dictionary. The ''value'' in a name/value pair represents the value to be associated with the Data Element being specified in the appropriate format as defined in the Data Dictionary and encoded according to the HTTP protocol.

d. CSV Format: Comma Separated Value (CSV) formatted Input information transferred in the body of a User's HTTP message shall be supported. The ''Content-length:'' HTTP header shall define the length in bytes of the Input, and the ''Content-type: text/x-oasis-csv'' HTTP header shall be used to identify the data type included in the message body.

4.2.5.2 Response to Input

In response to a validly formatted Input for each Input/Response OASIS Template, the OASIS shall return an indication as to the success/failure of the requested action. The OASIS shall respond to the Input in one of two forms, based on the OUTPUT—FORMAT, which was input by a User either as a Query Variable or in a CSV format Header Record:

a. HTML: If the User requests the response to have the format of ''HTML'' (OUTPUT__FORMAT=HTML) then the response from the OASIS shall be a web page using the HTML format. This shall be the default for all Input/Response Templates invoked using either the FORM, GET or POST methods of input.

b. CSV Format: Comma Separated Value (CSV) format (OUTPUT__FORMAT=DATA) returns the response information in the body of the HTTP response message. The ''Content-length:'' HTTP header shall define the length in bytes of the response, and the ''Content-type: text/x-oasis-csv'' HTTP header shall be used to identify the data type included in the message body. This shall be the default for all Input/Response Templates invoked using the CSV Format methods of input.

4.2.6 Query Variables

4.2.6.1 General

Both Query/Response and Input/Response OASIS Templates shall support the specification of a query string consisting of Query Variables formatted as name/value pairs. OASIS shall support the specification of Data Element names (''name''

portion of name=value pair) in both the full name and alias forms defined in the Data Dictionary. OASIS shall support the specification of Query Variables from the User using either the HTTP GET or POST methods. On input, Data Element names and associated values shall be accepted and processed without regard to case. On output, Data Element names and associated values may not necessarily retain the input case, and could be returned in either upper or lower case.

4.2.6.2 Standard Header Query Variables

The following standard Query Variable Data Elements shall be supported for all OASIS Templates and must be entered for each Query by a User:

VERSION
TEMPLATE
OUTPUT__FORMAT
PRIMARY__PROVIDER__CODE
PRIMARY__PROVIDER__DUNS
RETURN__TZ

Since these header Query Variables must be supported for all Templates, they are not listed explicitly in the Template descriptions in Section 4.3

All standard header Query Variables with appropriate values must be entered by the User.

4.2.6.3 Responses to Queries

Responses to Queries will include the following information as a minimum:

TIME__STAMP
VERSION
TEMPLATE
OUTPUT__FORMAT
PRIMARY__PROVIDER__CODE
PRIMARY__PROVIDER__DUNS
RETURN__TZ

The additional information shall include:

a. The requested information as defined by the Template indicated in the Query

b. For CSV downloads, the additional header Data Elements required (see section 4.2.7.3)

4.2.6.4 Multiple Instances

Certain Query Variables may be repeated in a given Query/Response OASIS Template query string. Where such multiple instances are documented in the Template definitions using an asterix (*) after the query variable. When more than one instance of the Query Variable is specified in the query string, OASIS shall recognize such multiple instances by either the Data Element's full name or alias suffixed with sequential numeric qualifiers starting with the number 1, (e.g., PATH__NAME1=abc&PATH__NAME2=xyz, or PATH1=abc&PATH2=xyz). At least 4 multiple instances will be permitted for each query variable marked with an asterix (*).

4.2.6.5. Logical Operations

OASIS shall use the following logical operations when processing Query Variables for Query/Response OASIS Templates. All Query Variables, with the exception of multiple instances of the same Query Variable Data Element, shall be operated on to return information based on the logical-AND of those Query Variables. For example, the query string ''* * *SELLER__CODE=abc&PATH=xyz* * *'' should return information associated with only those records that are on transmission path ''xyz'' AND associated with transmission provider ''abc.'' Multiple instances of the Query Variable shall be operated on as logical-OR. For example, ''* * *SELLER__CODE=abc&PATH1=xyz&PATH2=opq* * *'' should return information associated with transmission provider ''abc'' AND either transmission path ''xyz'' OR transmission path ''opq''. Some logical operations may exclude all possibilities, such that the responses may not contain any data.

4.2.6.6 Handling of Time Data Elements

In cases where a single query variable is provided to select information associated with a single template data element that represents a point in time (e.g., TIME__OF__LAST__UPDATE), OASIS shall return to the user all requested information whose associated data element time value (e.g. TIME__OF__LAST__UPDATE) is equal to or later than the value specified by the query variable. In this case the stop time is implicitly ''now''.

A pair of query variables (e.g. START__TIME__QUEUED and STOP__TIME__QUEUED) that represents the start and stop of a time interval but is associated with one single template data element (e.g. TIME__QUEUED) shall be handled by OASIS to return to the User all requested information whose associated data element time value falls within the specified time interval.

A pair of query variables (e.g. START__TIME and STOP__TIME query variables) that represents the start and stop of one time interval but is associated with another pair of template data elements (e.g. START__TIME and STOP__TIME of a service offering) that represents a second time interval, shall be handed by OASIS to return to the User all requested information whose associated data element time interval overlaps any portion of the specified time interval. Specifically, the START__TIME query variable, and the STOP__TIME query variable selects all information whose START__TIME data element value is earlier than the STOP__TIME query variable. For example:

The transoffering template query string START__TIME 970101000000ES&STOP__TIME 970201000000ES'' shall select from the OASIS database all associated offerings whose start/stop times overlap any portion of the time form 00:00 January 1, 1997, to 00:00 February 1, 1997. This would include offerings that (1) started prior to Jan. 1. stopped any time on or after Jan. 1, and (2) started on or after Jan. 1 but before Feb. 1

For changes to and from daylight savings time, either Universal Time or the correct time and zone must be used, based on whether daylight savings time is in effect.

All time values shall be checked upon input to ensure their validity with respect to date, time, time zone, and daylight savings time.

4.2.6.7 Default Values

Query Variable that are not specified by the User may take on default values as appropriate for that Query Variable at the discretion of the OASIS TSIP.

4.2.6.8 Limitations on Queries

OASIS TSIP may establish validation procedures and/or default values for Query Variables to restrict the size and/or performance impact of overly broad queries.

4.2.7 CSV Format

4.2.7.1 General Record Format

OASIS Users shall be able to upload information associated with Input/Response OASIS Templates and download information associated with all OASIS Templates using a standardized Comma Separated Value (CSV) format. CSV formatted data is transferred to/from OASIS as part of the body of an HTTP message using the ''Content-length:'' HTTP header to define the length in bytes of the message body, and the ''Content-type: text/x-oasis-csv'' HTTP header to identify the data type associated with the message body. CSV formatted data consists of a fixed set of header records followed by a variable number of data records. Each record shall be separated by a carriage return plus line feed (denoted by the symbol ↵ in all examples). The fields within a record shall be delimited by commas (,). All data within a CSV formatted message shall use printable ASCII characters with no other special embedded codes, with the exception of the special encoding requirements associated with text fields.

4.2.7.2 Input Header Records

The following standard header records are required for the uploading of Input data for all Input/Response OASIS Templates:

VERSION=nn.n¬
TEMPLATE=aaaaaaaaaa¬
OUTPUT__FORMAT=[DATA]¬
PRIMARY__PROVIDER__CODE=aaaa¬
PRIMARY__PROVIDER__DUNS=nnnnnnnnn¬
RETURN__TZ=aa¬
DATA__ROWS=nnn¬
COLUMN__HEADERS=[Template data element names separated by commas]¬

The format of the value associated with each of the Input header record Data Elements are dictated by the Data Dictionary.

The value associated with the DATA__ROWS Data Element shall define the total number of data records that follow in the message after the COLUMN__HEADERS record.

The COLUMN__HEADERS record defines, by Data Element name, the data associated with each comma separated column contained in each subsequent data record (row). On Input, either the Data Element's full name or alias listed in the Data Dictionary may be specified.

4.2.7.3 Response Header Records

When explicitly specified using the OUTPUT__FORMAT=DATA Query Variable or implied by the Input of a CSV format message, the OASIS shall respond with the following standard response header records for all OASIS Templates:

REQUEST__STATUS=nnn¬
ERROR__MESSAGE=aaa...¬
TIME__STAMP=yyyymmddhhmmsstz¬
VERSION=nn.n¬
TEMPLATE=aaaaaaaaaa¬
OUTPUT__FORMAT=DATA¬
PRIMARY__PROVIDER__CODE=aaaa¬
PRIMARY__PROVIDER__DUNS=nnnnnnnnn¬
RETURN__TZ=tz¬
DATA__ROWS=nnn¬
COLUMN__HEADERS=[Template data element names separated by commas]¬

The format of the value associated with each of the Response header record Data Elements are dictated by the Data Dictionary.

The value associated with the DATA__ROWS Data Element shall define the total number of data records returned in the message following the COLUMN__HEADERS header record.

The COLUMN__HEADERS record defines, by Data Element name, the data associated with each comma-separated column contained in each subsequent data record (row). In all OASIS responses, the Data Element's full name shall be listed in the COLUMN__HEADERS record. The order of the column headings shall be the same as shown in the Templates for URL uploads and downloads. For graphical displays, the Provider may define the order that the Data Element names are shown.

4.2.7.4 Data Records

Data Records immediately follow the standard Input or Response header records. With the exception of data records grouped together as a single ''logical record'' through the use of Continuation Records, each data record in a CSV

formatted Input message represents a single, complete execution of the associated OASIS Template. That is, sending five CSV formatted Input messages for a given Template to the same PRIMARY__PROVIDER__CODE with as single data record per message shall be handled in exactly the same fashion as sending a single CVS formatted Input message for the same Template and PRIMARY__PROVIDER__CODE which contains five data records.

Each field (column) within each data record defines the value to be associated with the corresponding Data Element defined in the COLUMN__HEADERS record. The number of Data Records in the message is defined by the DATA__ROWS header record. The data values associated with each column Data Element are interpreted based on the Data Element type as defined in the Data Dictionary:

a. Numeric Data Elements: All numeric Data Elements shall be represented by an ASCII string of numeric digits in base ten, plus the decimal point.

b. Text Data Elements: Alphabetic and alphanumeric data elements shall be represented as ASCII strings and encoded using the following rules:

- Text strings that do not contain commas (,) or double quotes (”) shall be accepted both with and without being enclosed by double quotes.
- Text fields with commas (,) or double quotes (”) must be enclosed with double quotes. In addition double quotes within a text field shall be indicated by two double quotes (“ ”).
- The Data Element field length specified in Data Dictionary does not include the additional double quotes necessary to encode text data.

a. Null Data Elements: Null Data Elements shall be represented by two consecutive commas (,,) corresponding to the leading and trailing (if appropriate) Data Element comma separators. Null text strings may optionally be represented by two consecutive double quote characters within the leading and trailing comma separators (i.e., ..., “ ”, ...).

4.2.7.5 Continuation Records

Continuation records shall be used to indicate that the information in multiple rows (records) is part of one logical record. Continuation records will be indicated through the use of a column header called CONTINUATION__FLAG. This column header is either the first column (if in a response to a query) or second column (if in a response to an input) in all Templates permitting continuation records. The first record shall contain a ‘‘N’’ in the CONTINUATION__FLAG column and each following record which is part of a continuation record shall contain a ‘‘Y’’ in this column, thus associating the information in that record with the information in the previous record. An ‘‘N’’ shall indicate that the record is not a continuation record. Any values corresponding to COLUMN__HEADERs other than those explicitly allowed for a particular Template shall be ignored. However commas must be included to properly align the fields.

4.2.7.6 Error Handling in CSV-Formatted Responses

Validity of each record in the CVS-formatted Response to a Template Input shall be indicated through the use of RECORD__STATUS and ERROR__MESSAGE Data Elements which are included in each data record (row) of the Response.

- If no error was encountered in an Input data record, the RECORD__STATUS Data Element in the corresponding Response record shall be returned with a value of 200 (success), and the ERROR__MESSAGE shall be blank.
- If any error is detected in processing an Input data record, it shall be indicated by a RECORD__STATUS Data Element value other than 200. The ERROR__MESSAGE shall be set to an appropriate text message to indicate the source of the error in that data record.

The overall validity of each Template Query or Input shall be indicated in the CSV-formatted Response via the two REQUEST__STATUS and ERROR__MESSAGE header records (see section 4.2.7.3):

- If no errors were encountered in processing the User’s Input data records, the REQUEST__STATUS shall be returned with the value of 200 (success), and the ERROR__MESSAGE shall be blank.
- If any errors were detected in the Template Input data records, the REQUEST__STATUS value shall any value other than 200, and the ERROR__MESSAGE shall be set to an appropriate text message to indicate the source of the error.

The OASIS node shall validate all Input records before returning a Response to the User. All valid records shall be processed by the node, while invalid records shall be identified as erroneous through he use of RECORD__STATUS and ERROR__MESSAGE. The User must correct the invalid fields and resubmit only those records which were invalid.If an error is encountered in a record which is part of a set of Continuation records, then all records belonging to that set must be resubmitted.

4.2.8 Registration Information

4.2.8.1 General

As specified in the Information Access Requirements, OASIS Nodes shall provide a mechanism to register Users of the OASIS with a Provider. For all levels of access to OASIS information beyond simple read-only access, OASIS node shall provide a mechanism to identify Users of the OASIS at least to the level of their respective Companies. Both Company and User registration information shall be maintained by the OASIS node.

4.2.8.2 Company Information

OASIS Templates require that certain Company registration information be maintained. As an extension of the Company registration information of the host, domain and port identifiers for dynamic notification of changes in the Customer’s purchase requests, a field should be added to the Company’s registration information that would define/identify how notification would be delivered to that Company should a transmission or ancillary purchase request be directed to that Company as a Seller of a transmission or ancillary service. The pertinent information would be either a full

HTTP protocol URL defining the protocol, host name, port, path, resource, etc. information or a ''mailto:'' URL with the appropriate mailbox address string. On receipt of any purchase request directed to that Company as SELLER via either the ''transrequest'' or ''ancrequest'' templates, or on submission of any change in request STATUS to the Company as SELLER via either the ''transcust'' or ''anccust'' templates, a notification message formatted as documented for the delivery of notification to the Customer, shall be formatted and directed to the Seller. At a minimum, OASIS shall maintain the following information for each Company.

a. Company Code: 4 character code for primary transmission providers; 6 character code for eligible customers in accordance with NERC Tagging Information System (TIS) requirements shall be maintained for each Company.

b. Default Contact: Unless specified for each individual user affiliated with the Company, default contact information consisting of a phone number, fax number, and e-mail address shall be maintained for each Company.

c. Provider Affiliation: Each eligible Customer shall be obligated to identify to the OASIS TSIP any affiliation with a Transmission Provider whose ''home page'' is on that OASIS node.

d. Notification URL: For Companies using the URL notification mechanism for delivery of messages on each change of ancillary/transmission reservation STATUS, each Company shall provide the IP host name and port number to be used in delivering notification messages. OASIS nodes shall have the right to refuse support for notification to any IP posts other than port 80.

4.2.8.3 User Information

With the exception of ''read-only'' (visitor) access, OASIS nodes shall as a minimum provide a mechanism to identify Users of the node with at least their Company. However, OASIS nodes and Providers shall have the right to require full User identification even for visitor accounts.

To support the required OASIS Template Data Elements, OASIS nodes shall maintain the following information for each registered User:

- Company
- Name
- Phone
- Fax
- E-mail

In the event no additional User identification/registration information is maintained by the OASIS, all Template Data Elements referring to ''company, name, phone, fax, e-mail'' for either Customers or Sellers shall default to the Contact Information maintained for that User's Company.

4.2.9 Representation of Time

4.2.9.1 General

It is critical that all Users of OASIS have a clear and unambiguous representation of time associated with all information transferred to/from OASIS. For this reason, all Data Elements associated with time in OASIS shall represent ''wall clock'' times, which are NOT to be confused with other common industry conventions such as ''hour ending.'' For the convenience of the User community, OASIS nodes shall be allowed to accept the input and display of ''time'' in any acceptable form provided such non-standard representations are CLEARLY labeled on the associated HTML screens. Alternate representations of time in CSV formatted messages shall not be allowed.

The following rules shall be implemented in OASIS for the representation of time on User entries (Query and Input) and output (Response) Templates.

4.2.9.2 Input Time

All time related Data Elements associated with either the Input or Query of Input/Response or Query/Response OASIS Templates shall be validated according to the following rules. If the time zone associated with a time Data Element is associated with either Universal Time (UT) or a ''standard'' time zone (e.g., ES, CS, etc.), OASIS shall accept and apply a fixed hour offset from Universal Time year-round. If the time zone associated with a time Data Element is specified with a ''daylight savings'' time zone (e.g., ED, CD, etc.), OASIS shall verify that daylight savings time is in effect for the date/time specified.

If daylight savings time (as specified by the time from 2:00 a.m. on the first Sunday of April through 2:00 a.m. on the last Sunday of October) is not in effect, the Users input shall be rejected with an error response. If daylight savings time is in effect, the Users input shall be accepted and the appropriate hours offset from Universal Time shall be applied by OASIS for conversion to all other time zones. The input of start/stop times for transactions spanning the crossover day between standard and daylight (and vice versa) times must be made either entirely in standard time (valid year-round), or in two different time zones (xS/xD or xD/xS) for the start and stop times, depending on the time of year.

4.2.9.3 Output (Response) Time

The OASIS shall return all time Data Elements in the response to Input/Response or Query/Response OASIS Templates based on either the User specified RETURN__TZ header Query Variable or an appropriate OASIS specific default. OASIS shall interpret RETURN__TZ to specify:

a. The base time zone for conversion of all time Data Elements (e.g. Eastern, Pacific, etc.).

b. Whether daylight savings time is recognized. For example, a RETURN__TZ=ES would return all time Data Elements in Eastern Standard Time year-round. However, a RETURN__TZ=ED would direct OASIS to return all time Data Elements in Eastern Standard Time (ES) when daylight savings time is not in effect, and then return all time Data Elements in Eastern Daylight Time (ED) when daylight time is in effect.

4.2.10 Transaction Process

4.2.10.1 Purchase Transactions

Customers shall purchase services from the Seller using the following steps (see Exhibit 4–1):

a. The Templates (transrequest and ancrequest) shall be used by a Customer to enter a request for specific transmission services from a specific Seller. The Customer may enter a BID__PRICE which is different from the OFFER__PRICE in order to try to negotiate a lower price. The OASIS sets the initial STATUS of the request to QUEUED. The Customer may set the STATUS__NOTIFICATION to indicate that the OASIS must notify the Customer on any change of STATUS of transstatus (see Dynamic Notification). Prior to or commensurate with a Seller's setting of a preconfirmed reservation request's STATUS to ACCEPTED (and by implication CONFIRMED), the Seller must set OFFER__PRICE equal to the value of BID__PRICE as established by the Customer on submission of the request.

b. The Templates (transstatus and ancstatus) shall be used by Customers and Sellers to monitor the status of their transactions in progress. These Templates shall also be used by any Users to review the status of any transactions. The NEGOTIATED__PRICE__FLAG data element is set when the Seller agrees to a BID__PRICE (by setting OFFER__PRICE equal to BID__PRICE) that is different from the previously posted price. It will show ''higher'' when OFFER__PRICE is higher than the posted price, and ''lower'' when the OFFER__PRICE is lower than the posted price.

c. The Templates (transsell and ancsell) shall be used by a Seller both to set a new value into STATUS and to negotiate a price by entering a new OFFER__PRICE which is different from the BID__PRICE entered by the Customer in the transrequest Template (if it was not PRECONFIRMED). During these negotiations, a Reseller shall formally indicate the approval or disapproval of a transaction and indicate which rights from prior confirmed reservations are to be reassigned. A Primary Provider may, but is not required, to enter transaction approval or disapproval using this Template. The valid STATUS values which may be set by a Seller are: RECEIVED, STUDY, OFFER, ACCEPTED, REFUSED, DISPLACED, ANNULLED, or RETRACTED.

d. The Customer shall use the transstatus and ancstatus Templates to view the Seller's new offer price and/or approval/disapproval decision.

e. After receiving notification of the transaction's STATUS being set to ''OFFER'' by the Seller, the Templates (*transcust* and *anccust*) shall be used by the Customer to modify the BID__PRICE and set the STATUS to REBID. After negotiations are complete (STATUS set to ''ACCEPTED'' by the Seller), the Customer shall formally enter the confirmation or withdrawal of the offer to purchase services for the OFFER__PRICE shown in the *transstatus* Template. The valid STATUS values which a Customer may set are: REBID, CONFIRMED, or WITHDRAWN.

f. The Seller shall use the *transstatus (ancstatus)* Templates to view the Customer's new bid price and/or confirmation/withdrawal decision, again responding through *transsell* or *ancsell* if necessary. If the Seller offers to sell a service at an OFFER__PRICE less than that posted in the *transoffering (ancoffering)* Template, the *transoffering (ancoffering)* Template must be updated to reflect the new OFFER__PRICE.

g. For deals consummated off the OASIS by a Seller, after the Customer has accepted the offering, the Templates (*transassign* and *ancassign*) may be used by the Seller to notify the Primary Provider of the transfer of rights to the Customer. Continuation records may be used to indicate the reassigning of rights for a ''profile'' of different assignments and different capacities over different time periods.

h. The source of all user and seller contact information shall be the User registration process. Therefore, it shall not be input as part of uploads, but shall be provided as part of all transaction downloads.

i. OASIS shall accept a seller initiated change in STATUS to ACCEPTED only when OFFER__PRICE matched BID__PRICE (i.e., seller must set OFFER__PRICE equal to BID__PRICE prior to or coincident with setting STATUS to accepted).

j. OASIS shall accept a customer initiated change in STATUS to CONFIRMED only when BID__PRICE matches OFFER__PRICE (i.e., customer must set BID__PRICE equal to OFFER__PRICE prior to or coincident with setting STATUS to confirmed).

4.2.10.2 Status Values

The possible STATUS values are:

QUEUED=initial status assigned by TSIP on receipt of ''customer services purchase request''

RECEIVED=assigned by TP to acknowledge QUEUED requests and indicate the service request is being evaluated, including for completing the required ancillary services

STUDY=assigned by TP to indicate some level of study is required or being performed to evaluate service request

OFFER=assigned by TP to indicate that a new OFFER__PRICE is being proposed

REBID=assigned by TC to indicate that a new BID__PRICE is being proposed

ACCEPTED=assigned by TP to indicate service request at the designated OFFER__PRICE has been approved/accepted. If the reservation request was submitted PRECONFIRMED, OASIS shall immediately set the reservation status to CONFIRMED. Depending upon the type of ancillary services required, the Seller may or may not require all ancillary service reservations to be completed before accepting a request.

REFUSED=assigned by TP to indicate service request has been denied, SELLER__COMMENTS should be used to communicate reason for denial of service

CONFIRMED=assigned by TC in response to TP posting ''ACCEPTED'' status, to confirm service. Once a request has been ''CONFIRMED'', a transmission service reservation exists

WITHDRAWN=assigned by TC at any point in request evaluation to withdraw the request from any further action

DISPLACED=assigned by TP when a ''CONFIRMED'' reservation from a TC is displaced by a longer term request and the TC has exercised right of first refusal (i.e., refused to match terms of new request)

ANNULLED=assigned by TP when, by mutual agreement with the TC, a confirmed reservation is to be voided.

RETRACTED=assigned by TP when the TC fails to confirm or withdraw the request within the required time period

BILLING CODE 6717–01–M

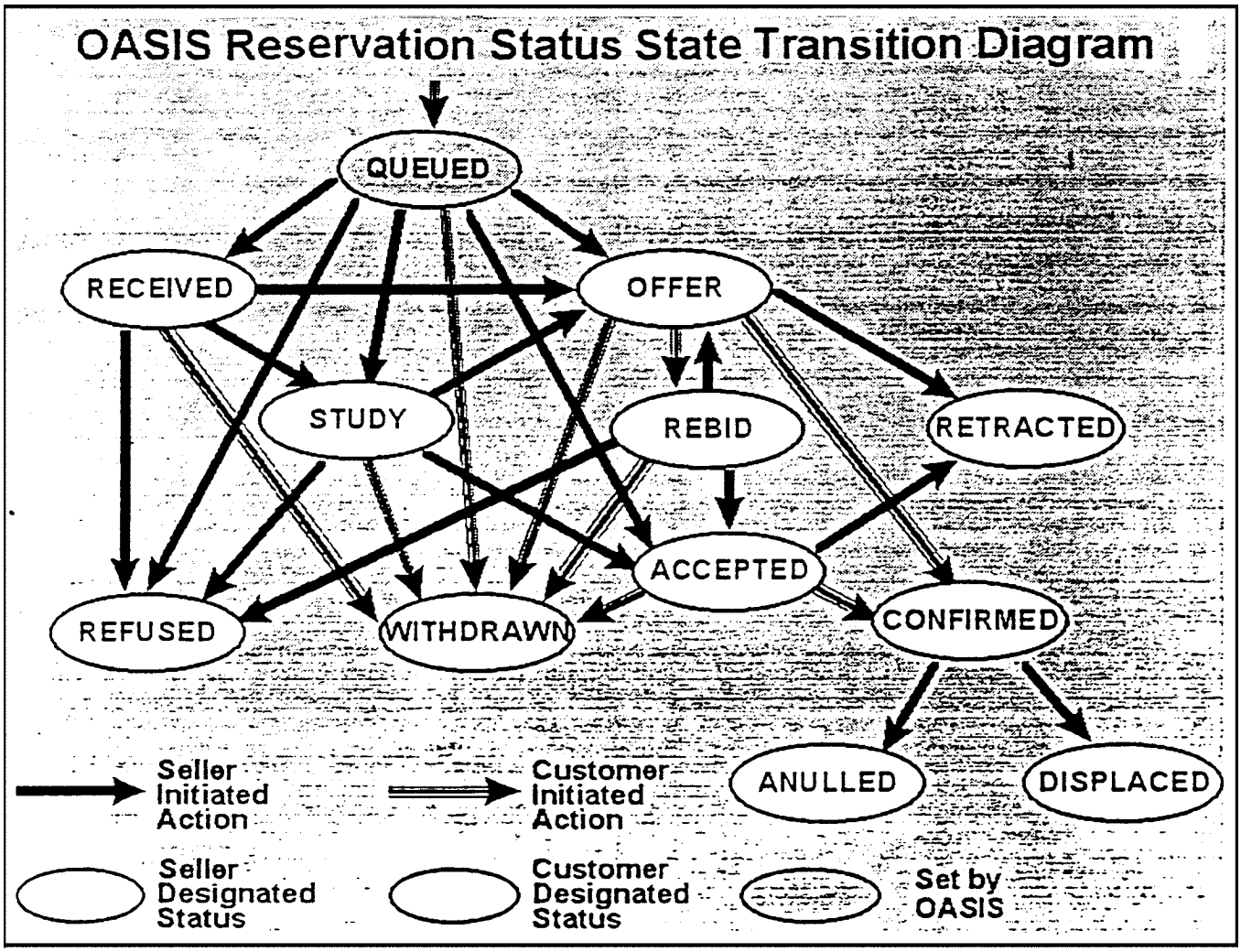

Exhibit 4-1 - State Diagram of Purchase Transactions

BILLING CODE 6717–01–C

4.2.10.3 Dynamic Notification

Customer's may specify the delivery of dynamic notification messages on each change in STATUS of an ancillary or transmission service reservation. OASIS shall support the delivery of dynamic notification messages through either the HTTP protocol or by electronic mail. The selection of which mechanism is used and the contents of the messages delivered to the client program or e-mail address is defined by the content of the STATUS__NOTIFICATION data element as described in the next subsections.

Regardless of whether this dynamic notification method is used or not, it shall remain the User's Regardless of whether this dynamic notification method is used or not, it shall still remain the User's responsibility to get the desired information, possibly through the use of a periodic ''integrity request''. OASIS nodes shall not be obligated or liable to guarantee delivery/receipt of messages via the STATUS__NOTIFICATION mechanism other than on a ''best effort'' basis.

As an extension of the Company registration information of the host, domain and port identifiers for dynamic notification of changes in the Customer's purchase requests, a field should added to the Company's registration information that would define/identify how notification would be delivered to that Company should a transmission or ancillary purchase request be directed to that Company as a Seller of a transmission or ancillary service. The pertinent information would be either a full HTTP protocol URL defining the protocol, host name, port, path, resource, etc. information or a ''mailto:'' URL with the appropriate mailbox address string. On receipt of any purchase request directed to that Company as SELLER via either the ''transrequest'' or ''ancrequest'' templates, or on submission of any change in request STATUS to that Company as SELLER via either the ''transrequest'' or ''ancrequest'' templates, or on submission of any change in request STATUS to that Company as SELLER via either the ''transcust'' or ''anccust'' templates, a notification message formatted as documented for the delivery of notification to the Customer, shall be formatted and directed to the Seller.

4.2.10.3.1 HTTP Notification

OASIS shall deliver dynamic notification to a client system based on HTTP URL information supplied in part by the STATUS__NOTIFICATION data element and by information supplied as part of the Customer's Company registration information. HTTP URL's are formed by the concatenation of a protocol field (i.e., http:), a domain name (e.g., // www.tsin.com), a port designation (e.g.,:80), and resource location information.

The STATUS__NOTIFICATION data element shall contain the protocol field ''http:'', which designates the notification method/protocol to be used, followed by all resource location information required; the target domain name and port designations shall be inserted into the notification URL based on the Customer's Company registration information. The resource location information may include directory information, cgi script identifiers and URL encoded query string name/value pairs as required by the Customer's application. OASIS performs no processing on the resource location information other than to include it verbatim along with the protocol, domain name and port information when forming the URL that will be used to deliver the HTTP protocol notification message.

For example, Company XYZ has established the domain name and port designations of ''//oasistc.xyz.com:80'' as part of their registration information.

When a transmission reservation is submitted by one of the Company XYZ's users (the Customer), and includes a STATUS__NOTIFICATION data element with the value of ''http:/cgi-bin/status? DEAL__REF=8&REQUEST__REF=173'', OASIS shall deliver an HTTP notification message using the URL: http//oasistc.xyz.com:80/cgi-bin/status? DEAL__REF=8&REQUEST__REF=173

If the STATUS__NOTIFICATION field contained only the ''http:'' protocol designation, the notification message would be delivered using the URL: http://oasistic.xyz.com:80

The contents of the HTTP protocol notification message delivered by OASIS shall consist of the complete URL created by combining fields from the STATUS__NOTIFICATION data element and Company registration information as part of an HTTP GET method request. In addition to the GET method HTTP header record, OASIS shall also append the CSV formatted output of the transstatus template information for that particular reservation using the standard Content-type: text/x-oasis-csv and appropriate Content-length: HTTP header records. OASIS shall use a Primary Provider specific default value for RETURN__TZ in formulating response information.

Continuing with the previous example, the important records in the HTTP notification message that would be delivered to Company XYZ for the transmission reservation request submitted to Primary Provider ABC and given an ASSIGNMENT__REF of 245 would be.

GET http://oasistc.xyz.com:80/cgi-bin/status?DEAL__REF=8&REQUEST__REF=173 HTTP/1.0
Content-type: text/x-oasis-civ
Content-length:<byte count of remainder of message≤
REQUEST__STATUS=200
TIME__STAMP=<appropriate value≤
VERSION=1.2
TEMPLATE=transstatus
OUTPUT__FORMAT=DATA
PRIMARY__PROVIDER__CODE=ABC
PRIMARY__PROVIDER__DUNS=123456789
RETURN__TZ=<appropriate value for ABC≤
DATA__ROWS=1
COLUMN__HEADERS=CONTINUATION__FLAG, ASSIGNMENT__REF, . . .
N, 245, . . .

In the event an error is encountered delivering the HTTP notification message to the target URL as indicated by a failure of the target system to respond, or return of HTTP response status of 408, 500, 503, or 504, OASIS shall retry up to two more times, once every 5 minutes.

4.2.10.3.2 E-mail Notification

OASIS shall deliver dynamic notification to an e-mail address based on Mailto: URL information specified in the STATUS__NOTIFICATION data element. Mailto: URL's consist of the ''mailto:'' protocol identifier and an Internet mail address to which the notification message should be sent. The STATUS__NOTIFICATION data element shall contain the protocol field ''mailto:'', which designates the notification method/protocol to be used, followed by an Internet mail address in conformance with RFC 822.OASIS shall send an e-mail message to the Internet mail address containing the following information: ''To:'' set to the mail address from the STATUS__NOTIFICATION data element, ''From:'' set to an appropriate mail address of the OASIS node, ''Subject:'' shall be the transstatus template name followed by the value of the ASSIGNMENT__REF data element and the current value for the STATUS data element associated with the reservation (e.g., ''subject: transstatus 245 ACCEPTED''), and the body of the message shall contain the CSV formatted output of the transstatus template information for that particular reservation. OASIS shall use a Primary Provider specific default value for RETURN__TZ in formulating the transstatus response information.

4.2.11 Reference Identifiers

The TSIP shall assign a unique reference identifier, ASSIGNMENT__REF, for each Customer request to purchase capacity or services. The value of ASSIGNMENT__REF may be used to imply the order in which the request was received by the TSIP. This identifier will be used to track the request through various stages, and will be kept with the service through out its life. Whenever the service is resold, a new ASSIGNMENT__REF number is assigned, but previous ASSIGNMENT__REF numbers are also kept so that a chain of all transactions related to the service can be maintained.

The TSIP shall assign a unique reference identifier, POSTING__REF, to each Seller's offerings of service for sale or other information (messages) posted on OASIS. This identifier shall be referenced by the Seller in any/all subsequent template submissions which would result in a modification to or deletion of that specific offering or message. Optionally, Customers may also refer to this POSTING__REF in their subsequent purchase requests to aid in identifying the specific offering associated with the purchase request.

Sellers may aggregate portions of several previous transmission service reservations to create a new offering to be posted on OASIS. When all or a portion of such offerings are sold, the Seller (original Customer) is obligated to notify the Primary Provider of the sale/assignment by inserting appropriate reassignment information on OASIS (via the transsell or transassign templates) or by some other approved method. This reassignment information consists of the ASSIGNMENT__REF value assigned to the original reservation(s) and the time interval and capacity amount(s) being reassigned to the new reservation. These values are retained in the REASSIGNED__REF, REASSIGNED__START__TIME, REASSIGNED__STOP__TIME, and REASSIGNED__CAPACITY data elements.

Sellers may identify their service offerings received from customers through the Seller supplied value specified for the SALE__REF data element.

Customers may track their purchase requests through the Customer supplied values specified for the DEAL__REF and REQUEST__REF data elements. Customers may also use POSTING__REF and SALE__REF in their purchase requests to refer back to posted offerings.

4.2.12 Linking of Ancillary Services to Transmission Services

The requirements related to ancillary services are shown in transoffering (and updated using transupdate) using the ANC__SVC__REQ data element containing the following permitted values:

SC:x; RV:x; RF:x; EI:x; SP:x; SU:x;

where SC, RV, RF, EI, SP and SU are the ancillary services 1 through 6 describe din the Proforma Tariff,

- SC—Scheduling, system Control and dispatch
- RV—Reactive supply and Voltage control
- RF—Regulation and Frequency response
- EI—Energy Imbalance
- SP—SPinning reserve
- SU—SUpplemental reserve

and where x={M,R,O,U} means one of the following:

- Mandatory, which implies that the Primary Provider must provide the ancillary service
- Required, which implies that the ancillary service is required, but not necessarily from the Primary Provider
- Optional, which implies that the ancillary service is not necessarily required, but could be provided
- Unknown, which implies that the requirements for the ancillary service are not known at this time

Ancillary services may be requested by a User from the Provider at the same time as transmission services are requested via the transrequest template, by entering the special codes into ANC__SVC__LINK to represent the Proformad ancillary services 1 through 6 (or more) as follows:

SC:(AA); RV:(AA); RF:(AA[:xxx[:yyy[:nnn]]]); EI:(AA[:xxx[:yyy[:nnn]]]);
SP:(AA[:xxx[:yyy[:nnn]]]); SU:(AA[:xxx[:yyy[:nnn]]]);
{Registered}:(AA[:xxx[:yyy[:nnn]]])

where AA is the appropriate PRIMARY__PROVIDER__CODE, SELLER__CODE, or CUSTOMER__CODE, and represents the company providing the ancillary services. ''AA'' may be unspecified for ''xxx'' type identical to ''FT'', in which case the ':'' character must be present and precede the''FT'' type.

If multiple ''AA'' terms are necessary, then each ''AA'' grouping will be enclosed within parenthesis, with the overall group subordinate to the ANC__SVC__TYPE specified within parenthesis.

and where xxx represents either:

__''FT'' to indicate that the Customer will determine ancillary services at a future time, or

__''SP'' to indicate that the Customer will self-provide the ancillary services, or

__''RQ'' to indicate that the Customer is asking the OASIS to initiate the process for making an ancillary services reservation with the indicated Provider or Seller on behalf of the Customer. The Customer must then continue the reservation process with the Provider or Seller. If the transmission services request is for preconfirmed service, then the ancillary services shall be preconfirmed, or

__''AR'' to indicate an assignment reference number sequence follows.

The terms ''yyy'' and ''nnn'' are subordinate to the xxx type of ''AR''.yyy represents the capacity of the reserved ancillary services. Square brackets are used to indicated optional elements and are not used in the actual linkage itself. Specifically, the :yyy is applicable to only the ''AR'' term and the :nnn may optionally be left off if the capacity of ancillary services is the same as for the transmission services, and optionally multiple ancillary reservations may be indicated by additional (xxx[:yyy[:nnn]]) enclosed within parenthesis. If no capacity amount is indicated, the required capacity is assumed to come from the ancillary reservations in the order indicated in the codes, on an ''as-needed'' basis.

Examples:

Example 1:

Assume ancillary services SC and RV are mandatory from the TP, whose code is ''TPEL'', and ancillary services RF, EI, SP and SU are required, but will be defined at a future time.

''SC: (TPEL:RQ); RV:(TPEL:RQ); RF:(:FT); EI:(:FT); SP:(:FT); SU:(:FT)''

Example 2:

Assume ancillary services SC and RV are mandatory from the TP, whose code is ''TPEL'', and RF, EI, SP and SU are self-supplied. The customer code is ''CPSE''

''SC:(TPEL:RQ); RV:(TPEL:RQ); RF:(CPSE:SP); EI:(CPSE:SP); SP:(CPSE:SP); SU:(CPSE:SP)''

Example 3:

Assume ancillary services SC and RV are mandatory from the TP, whose code is ''TPEL'', and ancillary services RF, EI, SP and SU were purchased via a prior OASIS reservation from seller ''SANC'' whose reservation number was ''39843''. There is sufficient capacity within the Ancillary reservation to handle this Transmission reservation.

''SC:(TPEL:RQ); RV:(TPEL:RQ); RF:(SANC:AR:39843); EI:(SANC:AR:AR:39843) SP:(SANC:AR:39843); SU:(SANC:AR:39843)''

Example 4:

Assume ancillary services SC and RV are mandatory from the TP, whose code is ''TPEL'', and ancillary services RF, EI, SP and SU were purchased via prior OASIS reservations from sellers ''SANC'' and ''TANC'', whose reservation numbers were ''8763'' and ''9824'' respectively. There is not sufficient capacity within the Ancillary reservation from seller ''SANC'' to handle this Transmission reservation. In this case the OASIS reservation number 8763 will be depleted for the time frame specified within the transmission reservation and the remaining required amount will come from reservation number ''9824''.

''SC:(TPEL:RQ); RV:(TPEL:RQ); RF:((SANC:AR:8763)(TANC:AR:9824)); EI:((SANC:AR:8763)(TANC:AR:9824)); SP:((SANC:AR:8763)(TANC:AR:9824)); SU:((SANC:AR:8763)(TANC:AR:9824))''

Example 5:

Assume a transmission reservation in the amount of 100 mw/hour for a period of one day is made. Ancillary services SC and RV are mandatory from the TP, whose code is ''TPEL'', and ancillary services RF, EI, SP and SU were purchased via prior OASIS reservations from sellers ''SANC'' and ''TANC'', whose reservation numbers were ''8763'' and ''9824'' respectively. There is sufficient capacity within the Ancillary reservation from seller ''SANC'' to handle this Transmission reservation, however the purchaser wishes to use only ''40 mw's'' from this seller. In this case the OASIS reservation number 8763 will be deplete in the amount of ''40 mw's'' for the time frame specified within the transmission reservation and the remaining required amount will come from reservation number ''9824''.

''SC:(TPEL:RQ); RV:(TPEL:RQ); RF:((SANC:AR:8763:40)(TANC:AR:9824)); EI:((SANC:AR:8763:40)(TANC:AR:9824)); SP:((SANC:AR:8763:40)(TANC:AR:9824)); SU:((SANC:AR:8763:40)(TANC:AR:9824))''

4.3 Template Descriptions

The following OASIS Templates define the Data Elements in fixed number and sequence which must be provided for all data transfers to and from the OASIS nodes. The definitions of the data elements are listed in the Data Element Dictionary in Appendix A.

TSIPs must provide a more detailed supplemental definition of the list of Sellers, Paths, Point of Receipt (POR), Point of Delivery (POD), Capacity Types, Ancillary Service Types and Templates online, clarifying how the terms are being used (see LIST Template). If POR and POD are not used, then Path Name must include directionality.

Many of the Templates represent query-response interactions between the User and the OASIS Node. These interactions are indicated by the ''Query'' and ''Response'' section respectively of each Template. Some, as noted in their descriptions, are Input information, sent from the User to the OASIS Node. The Response is generally a mirror of the Input, although in some Templates, the TSIP must add some information.

4.3.1 Template Summary

The following table provides a summary of the process areas, and Templates to be used by Users to query information that will be downloaded or to upload information to the Primary Providers. These processes define the functions that must be supported by an OASIS Node.

Process Area	Process Name	Template(s)
4.3.2 Query/Response of Posted Services Being Offered	Query/Response Transmission Capacity Offerings	transoffering
	Query/Response Ancillary Service Offerings	ancoffering
4.3.3 Query/Response of Services Information	Query/Response Transmission Services.	transserv
	Query/Response Ancillary Services	ancserv
4.3.4 Query/Response of Schedules and Curtailments	Query/Response Transmission Schedules	schedule
	Query/Response Curtailments	curtail
4.3.5 Query/Response of Lists of Information	Query/Response List of Sellers, Paths, PORs, PODs, Capacity Types, Ancillary Service Types, Templates.	list
4.3.6 Query/Response of Audit Log	Query/Response Audit Log	auditlog
4.3.7 Purchase Transmission Services	Request Purchase of Transmission Services (Input)	transrequest
	Query/Response Status of Transmission Service Request	transstatus
	Seller Approves Purchase (Input)	transsell
	Customer Confirm/Withdraw Purchase of Transmission Service (Input).	transcust
	Alternate POD/POR	transalt
	Seller Reassign Rights (Input)	transassign
4.3.8 Seller Posting of Transmission Service	Seller Post Transmission Service for Sale (Input)	transpost
	Seller Modify (Remove) Transmission Service for Sale (Input)	transupdate
4.3.9 Purchase of Ancillary Service	Request Purchase of Ancillary Service (Input)	ancrequest
	Query/Response Status of Ancillary Service Request	ancstatus
	Seller Approves Purchase of Ancillary Service (Input)	ancsell
	Customer Accept/Withdraw Purchase of Ancillary Service (Input).	anccust
4.3.10 Seller Post Ancillary Service	Seller Post Ancillary Service (Input)	ancpost
	Seller Modify (Remove) Ancillary Service for Sale (Input)	ancupdate
4.3.11 Informal Messages	Post Want Ads (Input)	messagepost
	Query/Response Want Ads	message
	Delete Want Ad (Input)	messagedelete
	Discretion	discretion
	Standards of Conduct	stdconduct

4.3.2 Query/Response of Posted Services Being Offered

The following Templates define the information to be posted on services offered for sale. All discounts for service negotiated by a Customer and Primary Provider (as Seller) at a price less than the currently posted offering price shall be posted on OASIS in such a manner as to be viewed using these Templates. All secondary market and/or third-party posting and Primary Provider offerings for like services shall also be viewed using these templates.

The Query must start with the standard header Query Variable Data Elements, listed in Section 4.2.6.2, and may include any valid combination of the remaining Query Variable, shown below in the Templates. START__TIME and STOP__TIME is the requested time interval for the Response to show all offerings which intersect that interval (see Section 4.2.6.6.). TIME__OF__LAST__UPDATE can be used to specify all services updated since a specific point in time.

Query variable listed with an asterix (*) can have at least 4 multiple instances defined by the user in making the query.

In the Response, OFFER__START__TIME and OFFER__STOP__TIME indicate the ''request time window'' within which a customer must request a service in order to get the post OFFER__PRICE. START__TIME and STOP__TIME indicate the time frame that the service is being offered for.

The SERVICE__DESCRIPTION data element shall define any attributes and/or special terms and conditions applicable to the offering that are not listed under the standard SERVICE__DESCRIPTION associated with the product definition supplied in the transserv or ancsery templates.

SERVICE__DESCRIPTION shall be null if there are no unique attributes or terms associated with the offering.

4.3.2.1 Transmission Capacity Offerings Available for Purchase (transoffering)

Transmission Services Offerings Available for Purchase (transoffering) is used to offer transmission services that are posted for sale by the Primary Provider or Resellers. At a minimum this Template must be used to post TTC and each increment and type of service required by applicable regulations and the Primary Provider's tariffs.

This Templates must include, for each posted path, the Primary Provider's TTC, firm ATC and non-firm ATC, as required by FERC orders 888 and 889 (plus revisions) and/or if provided in the Primary Provider's tariff. Additional transmission services may be offered with the same Template.

The POSTING__REF is set by the TSIP when an offering is posted and can be used in transrequests to refer to a particular offering.

A User may query information about services available from all sellers for the time frame specified by the SERVICE__INCREMENT data element, namely, hourly, daily, weekly, monthly, or yearly.

Template: transoffering

1. Query

PATH__NAME*
SELLER__CODE*
SELLER__DUNS*

POINT__OF__RECEIPT*
POINT__OF__DELIVERY*
SERVICE__INCREMENT*
TS__CLASS*
TS__TYPE*
TS__PERIOD*
START__TIME (of transmission services)
STOP__TIME (of transmission services)
POSTING__REF
TIME__OF__LAST__UPDATE

2. Response

The response is one or more records showing the requested service information. Note that the Customer will receive as a series of records spanning all the SELLER__CODEs, PATH__NAMEs, PORs, PODs, Ts__xxx, and the START__TIME/STOP__TIME specified in the query. The SALE__REF is a value provided by the SELLER to identify the transmission service product being sold. The ANC__SVC__REQ indicates all ancillary services required for the specified transmission services. All Templates elements are defined in the Data Element Dictionary.

TIME__OF__LAST__UPDATE
SELLER__CODE
SELLER__DUNS
PATH__NAME
POINT__OF__RECEIPT
POINT__OF__DELIVERY
INTERFACE__TYPE
OFFER__START__TIME
OFFER__STOP__TIME
START__TIME
STOP__TIME
CAPACITY
SERVICE__INCREMENT
TS__CLASS
TS__TYPE
TS__PERIOD
TS__WINDOW
TS__SUBCLASS
ANC__SVC__REQ
SALE__REF
POSTING REF
CEILING PRICE
OFFER__PRICE
PRICE__UNITS
SERVICE__DESCRITION (if null, then look at transserv)
NERC__CURTAILMENT__PRIORITY
OTHER__CURTAIMENT__PRIORITY
SELLER__NAME
SELLER__PHONE
SELLER__FAX
SELLER__EMAIL
SELLER__COMMENTS

4.3.2.2 Ancillary Services Available for Purchase (ancoffering)

Ancillary Services Available for Purchase (ancoffering) is used to provide information regarding the ancillary services that are available for sale by all sellers (both Primary Provider and Third Party Sellers.)

Template: ancoffering

1. Query

SELLER__CODE*
SELLER__DUNS*
CONTROL__AREA*
SERVICE__INCREMENT*
ANC__SERVICE__TYPE*
START__TIME
STOP__TIME
POSTING__REF
TIME__OF__LAST__UPDATE

2. Response

TIME__OF__LAST__UPDATE

SELLER__CODE
SELLER__DUNS
CONTROL__AREA
OFFER__START__TIME
OFFER__STOP__TIME
START__TIME
STOP__TIME
CAPACITY
SERVICE__INCREMENT
ANCILLARY__SERVICE__TYPE
SALE__REF
POSTING__REF
CEILING__PRICE
OFFER__PRICE
PRICE__UNITS
SERVICE__DESCRIPTION (if blank, then look at ancserv)
SELLER__NAME
SELLER__PHONE
SELLER__FAX
SELLER__EMAIL
SELLER__COMMENTS

4.3.3. Query/Response of Services Information

4.3.3.1 Transmission Services (transserv)

Transmission Services (transserv) is used to provide additional information regarding the transmission services SERVICE__INCREMENT, TS__CLASS, TS__TYPE, TS__PERIOD, TS__SUBCLASS, TS__WINDOW, NERC__CURTAIMENT__PRIORITY, and OTHER__CURTAIMENT__PRIORITY that are available for sale for a Provider in the Templates in Section 4.3.2. This Template is used to summarize Provider tariff information for the convenience of the User. The Provider also sets PRICE__UNITS with this Template.

Template: transserv

1. Query

TIME__OF__LAST__UPDATE

2. Response

TIME__OF__LAST__UPDATE
SERVICE__INCREMENT
TS__CLASS
TS__TYPE
TS__PERIOD
TS__WINDOW
TS__SUBCLASS
CEILING__PRICE
PRICE__UNITS
SERVICE__DESCRIPTION
NERC__CURTAILMENT__PRIORITY
OTHER__CURTIMENT__PRIORITY
TARIFF__REFERENCE

4.3.3.2 Ancillary Services (ancserv)

Ancillary Services (ancserv) is used to provide additional information regarding the ancillary services that are available for sale by a Provider in the Templates in Section 4.3.2. This Template is used to summarize Provider tariff information for the convenience of the User. The Provider also sets PRICE__UNITS with this Template.

Template: ancserv

1. Query

TIME__OF__LAST__UPDATE

2. Response

TIME__OF__LAST__UPDATE
SERVICE__INCREMENT
ANC__SERVICE__TYPE
CEILING__PRICE
PRICE__UNITS
SERVICE__DESCRIPTION
TARIFF__REFERENCE

4.3.4 Query/Response of Schedules and Curtailments

4.3.4.1 Hourly Schedule (schedule)

Hourly Schedule (schedule) is used to show what a Provider's scheduled transmission capacity usage actually was for specific Paths. All the information provided is derived from that in the transmission reservation (see Template transstatus), except CAPACITY__SCHEDULED, which is the amount of the reservation which was scheduled. Posting of the schedules is organized around the transmission reservations, not the energy schedules. This may require the Primary Provider to map schedules back to the reservation. These records would have to be created for all reservations/schedules done off the OASIS during the operations scheduling period.

Template: schedule

1. Query

PATH__NAME*
SELLER__CODE*
SELLER__DUNS*
CUSTOMER__CODE*
CUSTOMER__DUNS*
POINT__OF__RECEIPT*
POINT__OF__DELIVERY*
SERVICE__INCREMENT*
TS__CLASS*
TS__TYPE*
TS__PERIOD*
START__TIME
STOP__TIME
TIME__OF__LAST__UPDATE
ASSIGNMENT__REF

2. Response

TIME__OF__LAST__UPDATE
SELLER__CODE
SELLER__DUNS
PATH__NAME
POINT__OF__RECEIPT
POINT__OF__DELIVERY
CUSTOMER__CODE
CUSTOMER__DUNS
AFFILIATE__FLAG
START__TIME (start time of schedule)
STOP__TIME (stop time of schedule)
CAPACITY (reserved)
CAPACITY__SCHEDULED (total of energy scheduled for this customer for this reservation for this hour)
SERVICE__INCREMENT
TS__CLASS
TS__TYPE
TS__PERIOD
TS__WINDOW
TS__SUBCLASS
NERC__CURTAILMENT__PRIORITY
OTHER__CURTAILMENT__PRIORITY
ASSIGNMENT__REF (Last rights holder)

4.3.4.2 Curtailment/Interruption (curtail)

Curtailment/Interruption (curtail) provides additional information about the actual curtailment of transmission reservations that have been scheduled for energy exchange. All fields are derived from the reservation except the CAPACITY__CURTAILED, CURTAILMENT__REASON and CURTAILMENT__OPTIONS. These fields provide information on the reasons for the curtailment procedures to be followed and options for the Customer, if any, to relieve the curtailment.

Template: curtail

1. Query

PATH__NAME*
SELLER__CODE*
SELLER__DUNS*
CUSTOMER__CODE*
CUSTOMER__DUNS*
POINT__OF__RECEIPT*
POINT__OF__DELIVERY*

SERVICE__INCREMENT*
TS__CLASS*
TS__TYPE*
TS__PERIOD*
START__TIME
STOP__TIME
TIME__OF__LAST__UPDATE
ASSIGNMENT__REF

2. Response

TIME__OF__LAST__UPDATE
SELLER__CODE
SELLER__DUNS
PATH__NAME
POINT__OF__RECEIPT
POINT__OF__DELIVERY
CUSTOMER__CODE
CUSTOMER__DUNS
AFFILIATE__FLAG
START__TIME (Start time of curtailment)
STOP__TIME (Stop time of curtailment)
CAPACITY (Capacity reserved)
CAPACITY__SCHEDULED
CAPACITY__CURTAILED
SERVICE__INCREMENT
TS__CLASS
TS__TYPE
TS__PERIOD
TS__WINDOW
TS__SUBCLASS
NERC__CURTAILMENT__PRIORITY
OTHER__CURTAILMENT__PRIORITY
CURTAILMENT__REASON
CURTAILMENT__PROCEDURES
CURTAILMENT__OPTIONS
ASSIGNMENT__REF

4.3.5 Query/Response of Lists of Information

4.3.5.1 List (list)

List (list) is used to provide lists of valid names. The minimum set of lists is LIST, SELLER__CODEs, PATHs, PORs, PODs, SERVICE__INCREMENTs, TS__CLASSes, TS__TYPEs, TS__PERIODS, NERC__CURTAILMENT__PRIORITY, OTHER__CURTAILMENT__PRIORITY, ANCILLARY__SERVICE__TYPEs, CATEGORYs, and TEMPLATEs. These names may be used to query information, post or request services.

Template: list

1. Query

LIST__NAME
TIME__OF__LAST__UPDATE

2. Response

TIME__OF__LAST__UPDATE
LIST__NAME
LIST__ITEM
LIST__ITEM__DESCRIPTION

4.3.6 Query/Response to Obtain the Audit log

4.3.6.1 Audit Log Information (auditlog)

Audit Log Information (auditlog) is used to provide a means of accessing the required audit information. The TSIP will maintain two types of logs:

a. Log of changes posted TS Information, such as CAPACITY. This log will record as a minimum the time of the change, the Template name, the name of the Template data element changed and the old and new values of the Template data element.

b. A complete record of all transaction events, such as those contained in the Templates 4.3.8, 4.3.9 and 4.3.10. For transaction event logs, the response will include: TIME__STAMP, TEMPLATE, ELEMENT__NAME, AND NEW__DATA. In this case the value of OLD__DATA is not applicable.

Template: auditlog

1. Query

START__TIME (search against audit log)

STOP__TIME (search against audit log)

2. Response

ASSIGNMENT__REF OR POSTING__REF
TIME__STAMP
TEMPLATE
ELEMENT__NAME (for data elements whose values have changed)
OLD__DATA

4.3.7 Purchase Transmission Service

The following Templates shall be used by Customers and Sellers to transact purchases of services.

4.3.7.1 Customer Capacity Purchase Request (transrequest)

The Customer Capacity Purchase Request (Input) (transrequest) is used by the Customer to request the purchase of transmission services. The resp[onse simply acknowledges that the Customer's request was received by the OASIS Node. It does not imply that the Seller has received the request. Input ting values into the reference Data Elements is optional.

CUSTOMER__CODE and CUSTOMER__DUNS shall be determined from the registered connection used to input the request.

Supporting ''profiles'' of services, which request different capacities for different time periods within a single request, is at the discretion of the Primary Provider. Continuation records may be used to indicate requests for these service profiles. Only the following fields may be redefined in a continuation record for the transrequest Template: CAPACITY, BID__PRICE, START__TIME, AND STOP__TIME.

For requesting transmission services which include multiple paths, only the following fields may be redefined in a continuation record for the transrequest Template. PATH__NAME. Supporting multiple paths is at the discretion of the Provider.

The START__TIME and STOP__TIME indicate the requested period of service.

When the request is received at the OASIS Node, the TSIP assigns a unique ASSIGNMENT__REF value and queues the request with a time stamp. The STATUS for the request is QUEUED.

Specification of a value YES in the PRECONFIRMED field authorizes the TSIP to automatically change the STATUS field in the transstatus Template to CONFIRMED when that request is ACCEPTED by the Seller.

Template: transrequest

1. Input

CONTINUATION__FLAG
SELLER__CODE (Primary or Reseller)
SELLER__DUNS
PATH__NAME
POINT__OF__RECEIPT
POINT__OF__DELIVERY
SOURCE
SINK
CAPACITY
SERVICE__INCREMENT
TS__CLASS
TS__TYPE
TS__PERIOD
TS__SUBCLASS
STATUS__NOTIFICATION
START__TIME
STOP__TIME
BID__PRICE
PRECONFIRMED
ANC__SVC__LINK
POSTING__REF (Optionally set by Customer)
SALE__REF (Optionally set by Customer)
REQUEST__REF (Optionally set by Customer)
DEAL__REF (Optionally set by Customer)
CUSTOMER__COMMENTS

2. Response (acknowledgment)

RECORD__STATUS
CONTINUATION__FLAG
ASSIGNMENT__REF (assigned by TSIP)
SELLER__CODE
SELLER__DUNS
PATH__NAME
POINT__OF__RECEIPT

POINT__OF__DELIVERY
SOURCE
SINK
CAPACITY
SERVICE__INCREMENT
TS__CLASS
TS__TYPE
TS__PERIOD
TS__SUBCLASS
STATUS__NOTIFICATION
START__TIME
STOP__TIME
BID__PRICE
PRECONFIRMED
ANC__SVC__LINK
POSTING__REF
SALE__REF
REQUEST__REF
DEAL__REF
CUSTOMER__COMMENTS
ERROR__MESSAGE

4.3.7.2 Status of Customer Purchase Request (transstatus)

The Status of Customer Purchase Request (transstatus) is provided upon the request of any Customer or Provider to indicate the current status of one or more reservation records. Users may also view any transaction's status. Transmission Providers shall make source and sink information available at the time the request status posting is updated to show that a transmission request is confirmed.

Only the following fields may be redefined in a continuation record for the transstatus response Template: PATH__NAME, CAPACITY, START__TIME, STOP__TIME, REASSIGNED__REF, REASSIGNED__CAPACITY, REASSIGNED__START__TIME, and REASSIGNED__STOP__TIME.

The AFFILIATE__FLAG will be set by the TSIP to indicate whether or not the Customer is an affiliate of the Primary Provider. The NEGOTIATED__PRICE__FLAG will be set by the TSIP to indicate whether the OFFER__PRICE is higher, lower, or the same as the BID__PRICE.

Template: transstatus

1. Query

SELLER__CODE*
SELLER__DUNS*
CUSTOMER__CODE*
CUSTOMER__DUNS*
PATH__NAME*
POINT__OF__RECEIPT*
POINT__OF__DELIVERY*
SERVICE__INCREMENT*
TS__CLASS*
TS__TYPE*
TS__PERIOD*
STATUS*
START__TIME (Beginning time of service)
STOP__TIME
START__TIME__QUEUED (Beginning time queue)
STOP__TIME__QUEUED
NEGOTIATED__PRICE__FLAG
ASSIGNMENT__REF
REASSIGNED__REF
SALE__REF
REQUEST__REF
DEAL__REF
TIME__OF__LAST__UPDATE

2. Response

CONTINUATION__FLAG
ASSIGNMENT__REF
SELLER__CODE
SELLER__DUNS
CUSTOMER__CODE
CUSTOMER__DUNS
AFFILIATE__FLAG (Set by TSIP)

PATH__NAME
POINT__OF__RECEIPT
POINT__OF__DELIVERY
SOURCE
SINK
CAPACITY (total reservation)
SERVICE__INCREMENT
TS__CLASS
TS__TYPE
TS__PERIOD
TS__WINDOW
TS__SUBCLASS
NERC__CURTAILMENT__PRIORITY
OTHER__CURTAILMENT__PRIORITY
START__TIME
STOP__TIME
CEILING__PRICE
OFFER__PRICE
BID__PRICE
PRECONFIRMED
ANC__SVC__LINK
ANC__SVC__REQ
ALTERNATE__SERVICE__FLAG
POSTING__REF
SALE__REF
REQUEST__REF
DEAL__REF
NEGOTIATED__PRICE__FLAG (''L'' if Seller accepted Price is lower than OFFER__PRICE in transoffering Template; ''H'' if higher; otherwise blank)
STATUS=RECEIVED, QUEUED, STUDY, REBID, OFFER, ACCEPTED, REFUSED, CONFIRMED, WITHDRAWN, DISPLACED, ANNULLED, RETRACTED
STATUS__NOTIFICATION
STATUS__COMMENTS
TIME__QUEUED
RESPONSE__TIME__LIMIT
TIME__OF__LAST__UPDATE
PRIMARY__PROVIDER__COMMENTS
SELLER__COMMENTS
CUSTOMER__COMMENTS
SELLER__NAME
SELLER__PHONE
SELLER__FAX
SELLER__EMAIL
CUSTOMER__NAME
CUSTOMER__PHONE
CUSTOMER__FAX
CUSTOMER__EMAIL
REASSIGNED__REF
REASSIGNED__CAPACITY (Capacity from each previous transaction)
REASSIGNED__START__TIME
REASSIGNED__STOP__TIME

4.3.7.3 Seller Approval of Purchase (transsell)

Seller Approval of Purchase (Input) (transsell) is input by a Seller to modify the status and queue of a request by a Customer.

If **preconfirmed** then Seller can only change values of data elements, STATUS, STATUS__COMMENTS, SELLER__COMMENTS, REASSIGNED__REF, NEGOTIATED__PRICE__FLAG, ANC__SRV__REQ, REASSIGNED__START__TIME, REASSIGNED__STOP__TIME, and REASSIGNED__CAPACITY. If not **preconfirmed,** then the Seller can also change OFFER__PRICE.

Only the following fields may be redefined in a continuation record for the transsell Template: REASSIGNED__CAPACITY, OFFER__PRICE, REASSIGNED__REF, REASSIGNED__START__TIME, and REASSIGNED__STOP__TIME.

SELLER__CODE and SELLER__DUNS shall be determined from the registered connection used to input the request.

The Seller may accept a reservation only when the BID__PRICE and the OFFER__PRICE are the same.

Template: transsell

1. Input

CONTINUATION__FLAG

ASSIGNMENT__REF (Required)
OFFER__PRICE
STATUS=RECEIVED, STUDY, OFFER, ACCEPTED, REFUSED, ANNULLED, RETRACTED, DISPLACED
STATUS__COMMENTS
OTHER__CURTAILMENT__PROPERTY (optional)
ANC__SVC__REQ
NEGOTIATED__PRICE__FLAG
SELLER__COMMENTS
RESPONSE__TIME__LIMIT
REASSIGNED__REF
REASSIGNED__CAPACITY (Previous capacity to be reassigned)
REASSIGNED__START__TIME
REASSIGNED__STOP__TIME

2. Response

RECORD__STATUS
CONTINUATION__FLAG
ASSIGNMENT__REF
OFFER__PRICE
STATUS=RECEIVED, STUDY, OFFER, ACCEPTED, REFUSED, ANNULLED, RETRACTED, DISPLACED
STATUS__COMMENTS
OTHER__CURTAILMENT__PRIORITY
ANC__SVC__REQ
NEGOTIATED__PRICE__FLAG
SELLER__COMMENTS
RESPONSE__TIME__LIMIT
REASSIGNED__REF
REASSIGNED__CAPACITY (Previous capacity to be reassigned)
REASSIGNED__START__TIME
REASSIGNED__STOP__TIME
ERROR__MESSAGE

4.3.7.4 Customer Confirmation of Purchase (Input) (Transcust)

Customer Confirmation of Purchase (Input) (transcust) is input by the Customer to state his agreement or withdrawal of a purchase after the Seller has indicated that the purchase request is approved. Only the BID__PRICE, STATUS, STATUS__COMMENTS, ANC__SVC__LINK, and CUSTOMER__COMMENTS data elements can be modified in this Template.

CUSTOMER__CODE and CUSTOMER__DUNS shall be determined from the registered connection used to input the request.

The Customer must change the BID__PRICE to be equal to the OFFER__PRICE for each record before the STATUS can be set to CONFIRMED.

Template: transcust

1. Input

CONTINUATION__
ASSIGNMENT__REF (Required)
REQUEST__REF
DEAL__REF
BID__PRICE
STATUS=REBID, CONFIRMED, WITHDRAWN
STATUS__COMMENTS
ANC__SVC__LINK
STATUS__NOTIFICATION If left blank, then original URL from the *transrequest* will be used
CUSTOMER__COMMENTS

2. Response

RECORD__STATUS
CONTINUATION__FLAG
ASSIGNMENT__REF
REQUEST__REF
DEAL__REF
BID__PRICE
STATUS=REBID, CONFIRMED, WITHDRAWN
STATUS__COMMENTS
ANC__SVC__LINK
STATUS__NOTIFICATION
CUSTOMER__COMMENTS
ERROR__MESSAGE

4.3.7.5 Alternate Point of Receipt/Delivery (transalt)

Alternate Point of Delivery (transalt). The Customer may submit a request to use alternate points of receipt/delivery for an existing confirmed reservation, if allowed by applicable tariffs and service agreements. The assignment reference value associated with the prior confirmed reservation must be provided in the REASSIGNED__REF data element along with the alternate points of receipt/delivery. The request may be submitted as PRECONFIRMED. Requests submitted by the transalt template shall be handled by OASIS identically to reservations submitted using the transrequest template.

CUSTOMER__CODE and CUSTOMER__DUNS shall be determined from the registered connection used to input the request.

REASSIGNED__REF contains the ASSIGNMENT__REF of the original, confirmed reservation that is being designated to the alternate points of delivery/receipt. The Template allows for only one REASSIGNED__REF field. Therefore, if multiple, original reservations are being designated, a separate transalt Template must be submitted associated with each original reservation. There is no restriction that multiple submissions of the transalt Template may all refer back to the same, original reservation (i.e., may have the same REASSIGNED__REF).

Demand profiles associated with the designation of alternate POD/POR may be submitted by additional records designating ''Y'' for CONTINUATION__FLAG, and specifying the CAPACITY, START__TIME, and STOP__TIME data elements corresponding to the MW demand being requested over each time interval associated with the reservation. The CAPACITY, START__TIME, and STOP__TIME data elements must fall within the amounts and time intervals associated with the original reservation.

The following data elements in transstatus and the appropriate ones in transcust shall take on the following implied values:

SELLER__CODE (value from SELLER__CODE in reservation designated by REASSIGNED__REF)
SELLER__DUNS (value from SELLER__DUNS in reservation designated by REASSIGNED__REF)
ALTERNATE__SERVICE__FLAG=YES
OFFER__PRICE=$0
BID__PRICE=$0
CEILING__PRICE=$0
TS__CLASS=Non-Firm (or whatever the Provider designates)
REASSIGNED__CAPACITY=MW capacity submitted in CAPACITY field of Template
REASSIGNED__START__TIME=time submitted in START__TIME field of Template
REASSIGNED__STOP__TIME=time submitted in STOP__TIME field of Template

Template: transalt

1. Input

CONTINUATION__FLAG
PATH__NAME
POINT__OF__DELIVERY
SOURCE
SINK
PRECONFIRMED
CAPACITY (Must be less than or equal to original capacity reservation)
STATUS__NOTIFICATION
START__TIME (Valid only to hour and within the time of original reservation)
STOP__TIME (Valid only to hour and within the time of original reservation)
CUSTOMER__COMMENTS

2. Response (acknowledgment)

RECORD__STATUS
CONTINUATION__FLAG
ASSIGNMENT__REF (assigned by the TSIP)
SELLER__CODE (Primary)
SELLER__DUNS
PATH__NAME
POINT__OF__RECEIPT
POINT__OF__DELIVERY
SOURCE
SINK
PRECONFIRMED
ALTERNATE__SERVICE__FLAG (Defaulted to YES)
CAPACITY (Capacity requested)
STATUS__NOTIFICATION
START__TIME
STOP__TIME
REQUEST__REF
DEAL__REF
REASSIGNED__REF (Assignment Reference for the Firm reservation being used for request)

4.3.7.6 Seller to Reassign Service Rights to Another Customer (transassign)

Seller to Reassign Service Rights to Another Customer (Input) (transassign) is used by the seller to ask the Transmission Services Information Provider to reassign some or all of the seller's rights to Services to another Customer, for seller

confirmed transactions that have occurred off the OASIS. The TSIP shall assign a unique ASSIGNMENT__REF in the response (acknowledgment) and enter the status CONFIRMED as viewed in the transstatus Template.

SELLER__CODE and SELLER__DUNS shall be determined from the registered connection used to input the request.

Only the following fields may be redefined in a continuation record for the transassign input Template: CAPACITY, START__TIME, STOP__TIME, REASSIGNED__REF, REASSIGNED__CAPACITY, REASSIGNED__START__TIME, and REASSIGNED__STOP__TIME.

SELLER__CODE and SELLER__DUNS shall be determined form the registered connection used to input the request.

Template: transassign

1. Input

CONTINUATION__FLAG
CUSTOMER__CODE
CUSTOMER__DUNS
PATH__NAME
POINT__OF__RECEIPT
POINT__OF__DELIVERY
SOURCE
SINK
CAPACITY
SERVICE__INCREMENT
TS__CLASS
TS__TYPE
TS__PERIOD
TS__SUBCLASS
START__TIME
STOP__TIME
OFFER__PRICE
ANC__SVCX__LINK (optional: filled in if assignment is different than original transmission reservation)
POSTING__NAME
REASSIGNED__REF
REASSIGNED__CAPACITY (Capacity being sold from each previous assignment)
REASSIGNED__START__TIME
REASSIGNED__STOP__TIME
SELLER__COMMENTS

2. Response (acknowledgment)

RECORD__STATUS
CONTINUATION__FLAG
ASSIGNMENT__REF (assigned by TSIP)
CUSTOMER__CODE
CUSTOMER__DUNS
PATH__NAME
POINT__OF__RECEIPT
POINT__OF__DELIVERY
SOURCE
SINK
CAPACITY (Total capacity being reassigned)
SERVICE__INCREMENT
TS__CLASS
TS__TYPE
TS__PERIOD
TS__SUBCLASS
START__TIME
STOP__TIME
OFFER__PRICE
ANC__SVC__LINK
POSTING__NAME
REASSIGNED__REF
REASSIGNED__CAPACITY (Capacity being sold from each previous assignment)
REASSIGNED__START__TIME
REASSIGNED__STOP__TIME
SELLER__COMMENTS
ERROR__MESSAGE

4.3.8 Seller Posting of Transmission Services

Sellers shall use the following Templates for providing sell information. They may aggregate portions of several previous purchased to create a new service, if this capability is provided by the Transmission Services Information Provider:

4.3.8.1 Seller Capacity Posting (transpost)

Seller Capacity Posting (Input) (transpost) shall be used by the Seller to post the transmission capacity for resale on to the OASIS Node.

SELLER__CODE and SELLER__DUNS shall be determined from the registered connection used to input the request.

Template: transpost

1. Input

PATH__NAME
POINT__OF__RECEIPT
POINT__OF__DELIVERY
INTERFACE__TYPE
CAPACITY
SERVICE__INCREMENT
TS__CLASS
TS__TYPE
TS__PERIOD
TS__WINDOW
TS__SUBCLASS
OTHER__CURTAILMENT__PRIORITY (optional)
ANC__SVC__REQ
START__TIME
STOP__TIME
OFFER__START__TIME
OFFER__STOP__TIME
SALE__REF
OFFER__PRICE
SERVICE__DESCRIPTION
SELLER__COMMENTS

2. Response (acknowledgement)

RECORD__STATUS
POSTING__REF (Assigned by TSIP)
PATH__NAME
POINT__OF__RECEIPT
POINT__OF__DELIVERY
INTERFACE__TYPE
CAPACITY
SERVICE__INCREMENT
TS__CLASS
TS__TYPE
TS__PERIOD
TS__WINDOW
TS__SUBCLASS
OTHER__CURTAILMENT__PRIORITY
ANC__SVC__REQ
START__TIME
STOP__TIME
OFFER__START__TIME
OFFER__STOP__TIME
SALE__REF
OFFER__PRICE
SERVICE__DESCRIPTION
SELLER__COMMENTS
ERROR__MESSAGE

4.3.8.2 Seller Capacity Modify (transupdate)

Seller Capacity Modify (Input) (transupdate) shall be used by a Seller to modify a posting of transmission capacity. SELLER__CODE and SELLER__DUNS shall be determined from the registered connection used to input the request.

Template: transupdate

1. Input

POSTING__REF (Must be provided)
CAPACITY (only if modified)
START__TIME (only if modified)
STOP__TIME (only if modified)
OFFER__START__TIME (only if modified)
OFFER__STOP__TIME (only if modified)

ANC__SVC__REQ (only if modified)
SALE__REF (only if modified)
OFFER__PRICE (only if modified)
SERVICE__DESCRIPTION (only if modified)
SELLER__COMMENTS (only if modified)

2. Response (acknowledgment)

RECORD__STATUS
POSTING__REF
CAPACITY
START__TIME
STOP__TIME
OFFER__START__TIME
OFFER__STOP__TIME
ANC__SVC__REQ
SALE__REF
OFFER__PRICE
SERVICE__DESCRIPTION
SELLER__COMMENTS
ERROR__MESSAGE

4.3.9 Purchase of Ancillary Services

4.3.9.1 Customer Requests to Purchase Ancillary Services (ancrequest)

Customer Requests to Purchase Ancillary Services (ancrequest) (Input, Template Upload) is used by the customer to purchase ancillary services that have been posted by a seller of those services. The same requirements exist for the use of STATUS__NOTIFICATION as for transrequest. The reference Data Elements are optional.

CUSTOMER__CODE and CUSTOMER__DUNS shall be determined from the registered connection used to input the request.

Template: ancrequest

1. Input

SELLER__CODE
SELLER__DUNS
CONTROL__AREA
CAPACITY
SERVICE__INCREMENT
ANC__SERVICE__TYPE
STATUS__NOTIFICATION
START__TIME
STOP__TIME
BID__PRICE
PRECONFIRMED
POSTING__REF (Optionally set by Customer)
SALE__REF (Optionally set by Customer)
REQUEST__REF (Optionally set by Customer)
DEAL__REF (Optionally set by Customer)
CUSTOMER__COMMENTS

2. Response (acknowledgement)

RECORD__STATUS
ASSIGNMENT__REF (assigned by TSIP)
SELLER__CODE
SELLER__DUNS
CONTROL__AREA
CAPACITY
SERVICE__INCRECMENT
ANC__SERVICE__TYPE
STATUS__NOTIFICATION
START__TIME
STOP__TIME
BID__PRICE
PRECONFIRMED
POSTING__REF
SALE__REF
REQUEST__REF
DEAL__REF
CUSTOMER__COMMENTS

ERROR__MESSAGE

4.3.9.2 Ancillary Services Status (ancstatus)

Ancillary Services Status (ancstatus) is used to provide the status of purchase requests regarding the ancillary services that are available for sale by all Service Providers.

The AFFILIATE__FLAG will be set by the TSIP to indicate whether or not the Customer is an affiliate of the Seller.

The values of STATUS and processes for setting STATUS are the same as for transstatus.

Template: ancstatus

1. Query

SELLER__CODE*
SELLER__DUNS*
CUSTOMER__CODE*
CUSTOMER__DUNS*
CONTROL__AREA
SERVICE__INCREMENT
ANC__SERVICE__TYPE
STATUS
START__TIME
STOP__TIME
START__TIME__QUEUED
STOP__TIME__QUEUED
ASSIGNMENT__REF
SALE__REF
REQUEST__REF
DEAL__REF
TIME__OF__LAST__UPDATE (only if TIME__OF__LAST__UPDATE is posted by record)

2. Response

ASSIGNMENT__REF
SELLER__CODE
SELLER__DUNS
CUSTOMER__CODE
CUSTOMER__DUNS
AFFILIATE__FLAG (Set by TSIP)
CONTROL__AREA
CAPACITY
SERVICE__INCREMENT
ANC__SERVICE__TYPE
START__TIME
STOP__TIME
CEILING__PRICE
OFFER__PRICE
BID__PRICE
PRECONFIRMED
POSTING__REF
SALE__REF
REQUEST__REF
DEAL__REF
NEGOTIATED__PRICE__FLAG (''L if Seller accepted Price is lower than OFFER__PRICE in *ancoffering* Template; ''H'' if higher; otherwise blank)
STATUS=QUEUED, RECEIVED, REBID, OFFER, ACCEPTED, REFUSED, CONFIRMED, WITHDRAWN, ANNULLED, RETRACTED
STATUS__NOTIFICATION
STATUS__COMMENTS
TIME__QUEUED
RESPONSE__TIME__LIMIT
TIME__OF__LAST__UPDATE
PRIMARY__PROVIDER__COMMENTS
SELLER__COMMENTS
CUSTOMER__COMMENTS
SELLER__NAME
SELLER__PHONE
SELLER__FAX
SELLER__EMAIL
CUSTOMER__NAME
CUSTOMER__PHONE

CUSTOMER__FAX
CUSTOMER__EMAIL

4.3.9.3 Seller Approves Ancillary Service (ancsell)

Seller Approves Ancillary Service (ancsell) is used by the Seller to confirm acceptance after the Seller has approved the purchase of ancillary service.

SELLER__CODE and SELLER__DUNS shall be determined from the registered connection used to input the request.

Template: ancsell

1. Input

ASSIGNMENT__REF
OFFER__PRICE
STATUS=RECEIVED, OFFER, ACCEPTED, REFUSED
STATUS__COMMENTS
SELLER__COMMENTS

2. Response (acknowledgment)

RECORD__STATUS
ASSIGNMENT__REF
OFFER__PRICE
STATUS=RECEIVED, OFFER, ACCEPTED, REFUSED
STATUS__COMMENTS
NEGOTIATED__PRICE__FLAG
RESPONSE__TIME__LIMIT
SELLER__COMMENTS
ERROR__MESSAGE

4.3.9.4 Customer accepts Ancillary Service (anccust)

Customer accepts Ancillary Service (anccust) is used by the customer to confirm acceptance after the seller has approved the purchase of ancillary service.

The Customer must change the BID__PRICE to be equal to the OFFER__PRICE before the STATUS can be set to CONFIRMED.

CUSTOMER__CODE and CUSTOMER__DUNS shall be determined from the registered connection used to input the request.

Template: anccust

1. Input

ASSIGNMENT__REF (Required)
REQUEST__REF
DEAL__REF
BID__PRICE
STATUS=REBID, CONFIRMED, WITHDRAWN
STATUS__COMMENTS
STATUS__NOTIFICATION (If left blank, then the original URL from the ancrequest will be used)
CUSTOMER__COMMENTS

2. Response (Acknowledgment)

RECORD__STATUS
ASSIGNMENT__REF
REQUEST__REF
DEAL__REF
BID__PRICE
STATUS=REBID, CONFIRMED, WITHDRAWN
STATUS__COMMENTS
STATUS__NOTIFICATION
CUSTOMER__COMMENTS
ERROR__MESSAGE

4.3.10 Seller Posting of Ancillary Services

4.3.10.1 Seller Ancillary Services Posting (ancpost)

Seller Ancillary Services Posting (ancpost) is used by the Seller to post information regarding the different services that are available for sale by third party Sellers of ancillary services.

SELLER__CODE and SELLER__DUNS shall be determined from the registered connection used to input the request.

Template: ancpost

1. Input

CONTROL__AREA

SERVICE__DESCRIPTION
CAPACITY
SERVICE__INCREMENT
ANC__SERVICE__TYPE
START__TIME
STOP__TIME
OFFER__START__TIME
OFFER__STOP__TIME
SALE__REF
OFFER__PRICE
SELLER__COMMENTS

2. Response (acknowledgment)

RECORD__STATUS
POSTING__REF (Assigned by TSIP)
CONTROL__AREA
SERVICE__DESCRIPTION
CAPACITY
SERVICE__INCREMENT
ANC__SERVICE__TYPE
START__TIME
STOP__TIME
OFFER__START__TIME
OFFER__STOP__TIME
SALE__REF
OFFER__PRICE
SELLER__COMMENTS
ERROR__MESSAGE

4.3.10.2 Seller Modify Ancillary Services Posting (ancupdate)

Seller Modify Ancillary Services Posting (ancupdate) is used by the Seller to modify posted information regarding ancillary services that are available for sale by a third party Seller.

SELLER__CODE and SELLER__DUNS shall be determined from the registered connection used to input the request.

Template: ancupdate

1. Input

POSTING__REF (Required)
CAPACITY (only if modified)
SERVICE__DESCRIPTION (only if modified)
START__TIME (only if modified)
STOP__TIME (only if modified)
OFFER__START__TIME (only if modified)
OFFER__STOP__TIME (only if modified)
SALE__REF (only if modified)
OFFER__PRICE (only if modified)
SELLER__COMMENTS (only if modified)

2. Response (acknowledgment)

RECORD__STATUS
POSTING__REF
CAPACITY
SERVICE__DESCRIPTION
START__TIME
STOP__TIME
OFFER__START__TIME
OFFER__STOP__TIME
SALE__REF
OFFER__PRICE
SELLER__COMMENTS
ERROR__MESSAGE

4.3.11 Informal Messages

4.3.11.1 Provider/Customer Want Ads and Informal Message Posting Request (messagepost)

Provider/Customer Want Ads and Informal Message Posting Request (messagepost) is used by Providers and Customers who wish to post a message. The valid entries for CATEGORY shall be defined by providers and shall be listed in the List of CATEGORY Template.

One CATEGORY shall be DISCOUNT. All discount prices accepted by a Customer shall be immediately posted as a message using the DISCOUNT CATEGORY. This will permit carry-over from Phase I.

CATEGORY__CODE and CUSTOMER__DUNS shall be determined from the registered connection used to input the request.

Template: messagepost

1. Input

SUBJECT
CATEGORY
VALID__FROM__TIME
VALID__TO__TIME
MESSAGE (must be specified)

2. Response (acknowledgment)

RECORD__STATUS
POSTING__REF (assigned by information provider)
SUBJECT
CATEGORY
VALID__FROM__TIME
VALID__TO__TIME
MESSAGE
ERROR__MESSAGE

4.3.11.2 Message (message)

Message (message) is used to view a posted Want Ad or Informal Message. The CATEGORY data element can be queried. Specifically it shall be possible to query for the CATEGORY of DISCOUNT. This will permit carry-over from Phase 1.

Template: message

1. Query

CUSTOMER__CODE
CUSTOMER__DUNS
POSTING__REF
CATEGORY
VALID__FROM__TIME
VALID__TO__TIME
TIME__POSTED

2. Response

CUSTOMER__CODE
CUSTOMER__DUNS
POSTING__REF
SUBJECT
CATEGORY
VALID__FROM__TIME
VALID__TO__TIME
TIME__POSTED
CUSTOMER__NAME
CUSTOMER__PHONE
CUSTOMER__FAX
CUSTOMER__EMAIL
MESSAGE

4.3.11.3 Provider/Sellers Message Delete Request (messagedelete)

Providers/Sellers Message Delete Request (messagedelete) is used by Providers and Sellers who wish to delete their message. POSTING__REF number is used to determine which message.

CUSTOMER__CODE AND CUSTOMER__DUNS shall be determined from the registered connection used to input the request.

Template: messagedelete

1. Input

POSTING__REF

2. Response (acknowledgment)

RECORD__STATUS
POSTING__REF
ERROR__MESSAGE

4.3.11.4 Personnel Transfers (personnel)

Template: personnel

1. Query

TIME__OF__LAST__UPDATE

START__TIME__POSTED
STOP__TIME__POSTED

2. Response

POSTING__NAME
EMPLOYEE__NAME
FORMER__POSITION
FORMER__COMPANY
FORMER__DEPARTMENT
NEW__POSITION
NEW__COMPANY
NEW__DEPARTMENT
DATE__TIME__EFFECTIVE
DATE__TIME__POSTED
TIME__OF__LAST__UPDATE

4.3.11.5 Discretion (discretion)

Template: discretion

1. Query

START__TIME__POSTED
STOP__TIME__POSTED
START__TIME
STOP__TIME
SERVICE__TYPE
SERVICE__NAME
TIME__OF__LAST__UPDATE

2. Response

POSTING__NAME
RESPONSIBLE__PARTY__NAME (name of person granting discretion)
SERVICE__TYPE (ancillary or transmission)
SERVICE__NAME (make consistent with offering Templates)
TARIFF__REFERENCE
START__TIME
STOP__TIME
DISCRETION__DESCRIPTION
TIME__POSTED
TIME__OF__LAST__UPDATE

4.3.11.6 Standards of Conduct (stdconduct)

Template: stdconduct

1. Query

START__TIME__POSTED
STOP__TIME__POSTED
TIME__OF__LAST__UPDATE

2. Response

POSTING__NAME
RESPONSIBLE__PARTY__NAME
STANDARDS__OF__CONDUCT__ISSUES
TIME__POSTED
TIME__OF__LAST__UPDATE

4.4 File Request and File Download Examples

4.4.1 File Example for Hourly Offering

Example of the request to Primary Provider, aaa, and response for Seller, wxyz, for PATH__NAME ''W/AAAA/PATH__ABC//'' for April 10, 1996 from 8 a.m. to 3 p.m. (Note that the PATH__NAME consists of a REGION__CODE, PRIMARY__PROVIDER__CODE, PATH__CODE, and an OPTIONAL__CODE, separated with a slash, ''/''.) The VERSION for Phase 1A is 1.2.

The request is in the form of a URL query string and the response is a ASCII delimited file.

1. Query

http://(OASIS Node name)/OASIS/aaa/data/ transoffering? ver=1.2&templ=transoffering& fmt=data&pprov=AAAA &pprovduns= 123456789& path=W/AAA/ABC// &seller=WXYZAA &sellerduns=987654321& POR=aaa& POD=bbb& servincre=hourly& TSCLASS1=firm &TSCLASS2=non-firm&tz=PD&stime=19960410080000PD&sptime=19960410150000PD

2. Response Data

REQUEST-STATUS=200↵(Successful)

TIME__STAMP=19960409113526PD↵
VERSION=1.2↵
TEMPLATE=transoffering↵
OUTPUT__FORMAT=DATA↵
PRIMARY__PROVIDER__CODE=AAAA↵
PRIMARY__PROVIDER__DUNS=123456789↵
DATA__ROWS=14↵
COLUMN__HEADERS= TIME__OF__LAST__UPDATE, SELLER__CODE, SELLER__DUNS, PATH__NAME, POINT__OF__RECEIPT, POINT__OF__DELIVERY, INTERFACE__TYPE, OFFER__START__TIME, OFFER__STOP__TIME, START__TIME,STOP__TIME, CAPACITY, SERVICE__INCREMENT, TS__CLASS,TS__TYPE, TS__PERIOD, TS__SUBCLASS, SALE__REF, POSTING__REF, CEILING__PRICE, OFFER__PRICE, PRICE__UNITS, SERVICE__DESCRIPTION, SELLER__NAME, SELLER__PHONE, SELLER__FAX, SELLER__EMAIL, SELLER__COMMENTS↵
19960409030000PD, WXYZ, 987654321, W/AAA/ABC//,N/A,N/A,E, 19960402080000PD, 19960410080000PD, 19960410080000PD,19960410090000PD,300, HOURLY, FIRM, POINT__TO__POINT, OFF__PEAK, N/A, N/A, A001, 1.50,1.35,MW,N/A,N/A,N/A,N/A,N/A,10% DISCOUNT↵
19960409030000PD,WXYZ,987654321,W/AAA/ABC//,N/A,N/A,E,19960402080000PD,19960410080000PD, 1960410080000PD, 19960410090000PD,300, HOURLY, NON-FIRM, POINT__TO__POINT, OFF__PEAK, N/A,N/A,A001.50, 1.35,MW,N/A,N/A,N/A,N/A,N/A, 10% DISCOUNT↵
19960409030000PD, WXYZ, 987654321,W/AAA/ABC//,N/A,N/A,E, 19960402080000PD, 19960410080000PD, 19960410090000PD, 1996041010000PD,300, HOURLY, FIRM, POINT__TO__POINT, OFF__PEAK, N/A,N/A,A001,1.50,1.35, MW,N/A,N/A,N/A,N/A,N/A,10% DISCOUNT↵
19960409030000PD, WXYZ, 987654321,W/AAA/ABC//,N/A,N/A,E, 19960402080000PD, 19960410080000PD, 19960410090000PD, 19960410100000PD,300, HOURLY, NON-FIRM, POINT__TO__POINT, OFF__PEAK, N/A,N/A,A001,1.50,1.35.MW, N/A,N/A,N/A,N/A,N/A, 10% DISCOUNT↵
19960409030000PD, WXYZ. 987654321,W/AAA/ABC//,N/A,N/A,E, 19960402080000PD, 19960410080000PD,19960410100000PD,19960410110000PD,300, HOURLY, FIRM, POINT__TO__POINT, OFF__PEAK, N/A,N/A,A001,1.50,1.35,MW,N/A,N/A,N/A,N/A,N/A,10% DISCOUNT↵
19960409030000PD, WXYZ, 987654321,W/AAA/ABC//,N/A,N/A,E, 19960402080000PD, 19960410080000PD, 19960410100000PD, 19960410110000PD,300, HOURLY, NON-FIRM, POINT__TO__POINT, OFF__PEAK, N/A,N/A,A001,1.50,1.35,MW,N/A,N/A,N/A,N/A,N/A, 10% DISCOUNT↵
19960409030000PD, WXYZ, 987654321,W/AAA/ABC//,N/A,N/A,E, 19960402080000PD, 19960410080000PD,19960410110000PD,19960410120000PD,300, HOURLY, FIRM, POINT__TO__POINT, OFF__PEAK, N/A,N/A,A001,1.50,1.35,MW,N/A,N/A,N/A,N/A,10% DISCOUNT↵
19960409030000PD, WXYZ, 98765321,W/AAA/ABC//,N/A,N/A,E, 19960402080000PD, 19960410080000PD, 19960410110000PD,19960410120000PD,300, HOURLY, NON-FIRM, POINT__TO__POINT, OFF__PEAK, N/A,N/A,A001,1.50,1.35,MW,N/A,N/A,N/A,N/A,N/A, 10% DISCOUNT↵
. . .
. . .
. . .
19960409030000PD, WXYZ, 987654321,W/AAA/ABC//,N/A,N/A,E, 19960402080000PD, 19960410080000PD, 19960410140000PD,19960410150000PD,300, HOURLY, FIRM, POINT__TO__POINT, OFF__PEAK, N/A,N/A,A001,1.50,1.35,MW,N/A,N/A,N/A,N/A,N/A,10% DISCOUNT↵
1996040903000PD, WXYZ, 987654321,W/AAA/ABC//,N/A,N/A,E, 1996040208000PD, 19960410080000PD, 1996041014000PD,19960410150000PD,300, HOURLY, NON-FIRM, POINT__TO__POINT, OFF__PEAK, N/A,N/A,A001,1.50,1.35,MW,N/A,N/A,N/A,N/A,N/A, 10% DISCOUNT↵

4.4.2 File Example for Hourly Schedule Data

This example shows a request for the hourly schedule data from Primary Provider, aaa, related to the seller, wxyz, for the period 10 a.m. to 3 p.m. on April 10, 1996.

There are two identical requests examples using two slightly different methods. The first request is using a HTTP URL request string through an HTML GET method. The second request is a similar example using fetch__http from a file using a POST method.

1. Query

URL Request (HTTP method=GET)

http://(OASIS Node name)/OASIS/aaa/data/schedule? ver=1.0& pprov=AAAA& templ=schedule& fmt=data &pprovduns=123456789 &path=W/AAA/ABC//& seller=WXYZ &por=BBB &pod=CCC&tz=PD& stime=19960410100000PD& sptime=19960410150000PD

URL Request (HTTP method=POST)

$ fetch__http http://(OASIS Node name)/OASIS/aaa/data/OASISdata -f c:/OASIS/wxyz/upload/in-file.txt
Where in-file.txt contains the following:
ver=1.0& pprov=AAAA& templ=schedule& fmt=data &pprovduns=123456789 &path=W/AAA/ABC//& seller=WXYZ &por=BBB &pod=CCC& tz=PD& stime=19960410100000PD& sptime=19960410150000PD

2. Response Data

REQUEST-STATUS=200↵
TIME__STAMP=1996041014702PD↵

VERSION=1.2↵
TEMPLATE=Schedule↵
OUTPUT__FORMAT=DATA↵
PRIMARY__PROVIDER__CODE=AAAA↵
PRIMARY__PROVIDER__DUNS=123456789↵
DATA__ROWS=5↵
COLUMN__HEADERS=TIME__OF__LAST__UPDATE, SELLER__CODE, SELLER__DUNS, PATH__NAME, POINT__OF__RECEIPT, POINT__OF__DELIVERY, CUSTOMER__CODE, CUSTOMER__DUNS, AFFILIATE__FLAG, START__TIME, STOP__TIME, CAPACITY, CAPACITY__SCHEDULED, SERVICE__INCREMENT, TS__CLASS, TS__TYPE, TS__PERIOD, TS__SUBCLASS, ASSIGNMENT__REF↵
19960409030000pd. wxyz, 0987654321,W/AAA/ABC//, BBB,CCC, WXYZAA,0987654322,Y, 19960410100000PD, 19960410110000PD,300,300, HOURLY, FIRM, POINT__TO__POINT, OFF__PEAK, N/A 856743↵
. . .↵
. . .↵
19960409030000pd, wxyz, 0987654321,W/AAA/ABC//,BBB,CCC, WXYZAA, 0987654322,Y, 19960410130000PD,19960410140000PD,300,300, HOURLY, FIRM, POINT__TO__POINT, OFF__PEAK, N/A. 856743↵
19960409030000pd, wxyz, 0987654321,W/AAA/ABC//,BBB, CCC,WXYZAA, 0987654322,Y, 19960410140000PD, 19960410150000PD, 303,300.HOURLY,FIRM,POINT__TO__POINT,OFF__PEAK,N/A, 856743↵

4.4.3 Customer Posting a Transmission Service Offering

This example shows how a Customer would post for sale the transmission service that was purchased perviously. The Seller would create a file and upload the file using the FETCH__HTTP program to send a file to the OASIS node of the Primary Provider.

1. Input

VERSION=1.2↵
TEMPLATE=transpost↵
OUTPUT__FORMAT=DATE↵
PRIMARY__PROVIDER__CODE=AAAA↵
PRIMARY__PROVIDER__DUNS=123456789↵
DATA__ROWS=1↵
COLUMN__HEADERS=PATH__NAME, POINT__OF__RECEIPT, POINT__OF__DELIVERY, INTERFACE__TYPE, CAPACITY, SERVICE__INCREMENT, TS__CLASS, TS__TYPE, TS__PERIOD, TS__SUBCLASS, START__TIME, STOP__TIME, OFFER__START__TIME, OFFER__STOP__TIME, SALE__REF, OFFER__PRICE, SERVICE__DESCRIPTION, SELLER__COMMENTPF↵
WXYZ,987654321, W/AAA/ABC//, N/A,N/A,E,150, HOURLY, FIRM, POINT__TO__POINT, OFF__PEAK, N/A..19960402080000PD, 19960410080000PD, 19960410080000PD, 19960410150000PD, A123,.90.,N/A,‘‘‘As Joe said, ‘‘It is a good buy’’’’’↵

FETCH__HTTP Command to spend posting

$fetch__http http://(OSASIS Node name)/OASIS/abcd/data/transrequest -fc:/OASIS/abcd/upload/*post.txt*

2. Response Data

REQUEST-STATUS=200↵ (*Successful*)
TIME__STAMP=19960409113526PD↵
VERSION-1.2↵
TEMPLATE=Transport↵
OUTPUT__FORMAT=DATA↵
PRIMARY__PROVIDER__CODE=AAAA↵
PRIMARY__PROVIDER__DUNS=1234456789↵
DATA__ROWS=1↵
COLUMN__HEADERS=RECORD__STATUS, PATH__NAME, POINT__OF__RECEIPT, POINT__OR__DELIVERY, INTERFACE__TYPE, CAPACITY, SERVICE__INCREMENT, TS__CLASS, TS__TYPE, TS__PERIOD, TS__SUBCLASS, START__TIME, STOP__TIME, OFFER__START__TIME, OFFER__STOP__TIME, SALE__REF, OFFER__PRICE, SERVICE__DESCRIPTION, SELLER__COMMENTS, ERROR__MESSAGE↵
200,WXYZ, 987654321, W/AAA/ABC//,N/A,NA,E,150, HOURLY, FIRM, POINT__TO__POINT, OFF__PEAK, N/A,19960402080000PD, 19960410080000PD, 19960410080000PD, 19960410150000PD, A123..90,N/A,‘‘As Joe said, ‘‘‘It is a good buy’’’’’, NO ERROR↵

4.4.4 Example of Re-aggregating Purchasing Services Using Reassignment

The following examples do not show the complete Template information, but only show those elements of the Template of interest to the example.

a. Customer #1, ‘‘BestE’’ requests the purchase of 150 MW Firm ATC for 8 a.m. to 5 p.m. for $1.00 from a Primary Provider (*transrequest*).

TEMPLATE=transrequest↵
CUSTOMER__CODE=BestE↵
CAPACITY=150↵
TS__CLASS=‘‘FIRM’’↵

START TIME=''1996050708000000PD''↵
STOP__TIME=''1996050717000000PD''↵
BID__PRICE=''$1.00''↵

The Information Provider assigns ASSIGNMENT__REF = 5000 on acknowledgment.

b. Customer #1 purchases 120 MW ATC Non-firm for 3 p.m. to 9 p.m. for $.90 (transrequest). The Information Provider assigns the ASSIGNMENT__REF=5001 when the request for purchase is made and is shown in the acknowledgment.

TEMPLATE=''transrequest''↵
CUSTOMER__CODE=''BestE''↵
CAPACITY=120↵
TS__CLASS=''NON-FIRM''↵
START__TIME=''1996050715000000PD''↵
STOP__TIME=''1996050721000000PD''↵
BID__PRICE=''$1.05''↵

c. Customer #1 becomes Seller #1 and post the Transmission service of 100 MW ATC Non-firm capacity from 8 a.m. to 9 p.m. for resale at $.90/MW-hour.

TEMPLATE=''transpost''↵
SELLER__CODE=''BestE''↵
CAPACITY=100↵
TS__CLASS=''NON-FIRM''↵
START__TIME=''1996050708000000PD''↵
STOP__TIME=''1996050721000000PD''↵
SALE__REF=''BEST100''↵
OFFER__PRICE=.90↵
SELLER__COMMENTS-''aggregating two previous purchases''↵

d. Customer #2 then requsts purchase of 100 MW Non-firm from Reseller #1 from 8 a.m. to 6 p.m. for $0.90/MW=hour (*transrequest*).

TEMPLATE=''transrequest''↵
CUSTOMER__CODE=''Whisle''↵
SELLER__CODE=''BestE''↵
CAPACITY__=100↵
TS__CLASS=''NON-FIRM''↵
START__TIME=''1996050708000000PD''↵
STOP__TIME=''1996050721000000PD''↵
SALE__REF=''BEST100''↵
DEAL__REF=''WPC100''↵
BID__PRICE=.90↵
CUSTOMER__COMMENTS=''Only need service until 6 p.m.''↵

The Information Provider provides the ASSIGNMENT__REF=5002 for this transaction.

e. Seller informs the Information Provider of the reassignment of the previous transmission rights when the seller accepts the customer purchase request (transsell).

TEMPLATE=''transsell''↵
CUSTOMER__CODE=''Whisle''↵
SELLER__CODE=''BestE''↵
ASSIGNMENT__REF=5002↵
STATUS=''Accepted''↵
REASSIGNED__REFI=5000↵
REASSIGNED__CAPACITY1=100↵
REASSIGNED__START__TIME1=''199605070800PD''↵
REASSIGNED__STOP__TIME1=''199605071700PD''↵
REASSIGNED__REF2=5001↵
REASSIGNED__CAPACITY2=100↵
REASSIGNED__START__TIME2=''199605071700PD''↵
REASSIGNED__STOP__TIME2=''199605071800PD''↵

4.4.5 File Examples of the Use of Continuation Records

a. Basic Continuation Records: The first example of the use of Continuation Records is for the transrequest Template submitted by a Seller for purchase of a transmission reservation spanning 16 hours from 06:00 to 22:00 with ''ramped'' demand at beginning and end of time period. Two additional reservations appear prior to and following the profile to demonstrate the handling of ASSIGNMENT__REF by the OASIS node.

Only the following fields may be redefined in a continuation record for the transrequest Template: CAPACITY, START__TIME, STOP__TIME. Specification of any values corresponding to COLUMN__HEADERs other than CAPACITY, START__TIME, and STOP__TIME will be ignored, however commas must be included to properly align the CAPACITY, START__TIME and STOP__TIME fields.

Input:

VERSION=1.2↵
TEMPLATE=transrequest↵

OUTPUT__FORMAT=DATA↵
PRIMARY__PROVIDER__CODE=AEP↵
PRIMARY__PROVIDER__DUNS=123456789↵
DATA__ROWS=7↵
COLUMN__HEADERS=CONTINUATION__FLAG, SELLER__CODE, SELLER__DUNS, PATH__NAME, POINT__OF__RECEIPT, POINT__OF__DELIVERY, SOURCE, SINK, CAPACITY, SERVICE__INCREMENT, TS__CLASS, TS__TYPE, TS__PERIOD, TS__SUBCLASS, STATUS__NOTIFICATION, START__TIME, STOP__TIME, BID__PRICE, PRECONFIRMED, ANC__SVC__LINK, POSTING__REF, SALE__REF, REQUEST__REF, DEAL__REF, CUSTOMER__COMMENTS↵
N. AEP, 123456789, ABC/XY, CE, MECS...35, DAILY, FIRM, POINT__TO__POINT, OFF__PEAK, N/A,,pub/AEP/incoming, 19970423000000ES, 19970424000000ES, 24.50, Y, SC:(cust:SP);RF(cust:RQ); EI:(cust:R123); SP:(custR234); SU:(cust:R345), P0123, S123, R765, D123, Standard daily reservation↵
N, AEP, 123456789, ABC/XY, CE, AMPO,,,5, HOURLY, NON-FIRM, POINT__TO__POINT, OFF__PEAK, N/A, pub/AEP/incoming, 19970423060000ES, 19970423070000ES, 2.50, Y,SC:(cust:SP);RV:(cust:SP);RF(cust:RQ); EI:(cust:R123); SP:(custR234); SU:(cust:R345), P0123, S123, R765, D123, First piece of profile spanning 5 records↵
Y,,,,,,,, 10,,,,,,, 19970423070000ES, 19970423080000ES,,,,,,,,Second piece↵
Y,,,,,,,, 15,,,,,,, 19970423080000ES, 19970423200000ES,,,,,,,,Third piece↵
Y,,,,,,,, 10,,,,,,, 19970423200000ES, 19970423210000ES,,,,,,,,Fourth piece↵
Y,,,,,,,, 5,,,,,,, 19970423210000ES, 19970423220000ES,,,,,,,,Fifth piece↵
N, AEP, 123456789, ABC/XY, CE, MECS,,, 20, HOURLY, FIRM, POINT__TO__POINT, OFF__PEAK, N/A, pub/AEP/incoming, 19970423040000ES, 19970423220000ES, 2.00, Y,SC:(cust:SP);RV:(cust:SP);RF(cust:RQ); EI:(cust:R123); SP:(custR234); SU:(cust:R345), P0123, S123, R765, D123, Standard hourly reservation after profiled reservation↵

Response:

REQUEST__STATUS=200↵
TIME__STAMP=19970422160523ES↵
TEMPLATE=transrequest↵
OUTPUT__FORMAT=DATA↵
PRIMARY__PROVIDER__CODE=AEP↵
PRIMARY__PROVIDER__DUNS=123456789↵
DATA__ROWS=7↵
COLUMN__HEADERS=RECORD__STATUS, CONTINUATION__FLAG, SELLER__CODE, SELLER__DUNS, PATH__NAME, POINT__OF__RECEIPT, POINT__OF__DELIVERY, SOURCE, SINK, CAPACITY, SERVICE__INCREMENT, TS__TYPE, TS__PERIOD, TS__SUBLCASS, STATUS__NOTIFICATION, START__TIME, STOP__TIME, BID__PRICE, PRECONFIRMED, ANC__SVC__LINK, POSTING__REF, SALE__REF, REQUEST__REF, DEAL__REF, CUSTOMER__COMMENTS, ERROR__MESSAGE↵
200, N, AEP, 123456789, ABC/XY, CE, MECS,,,35, DAILY, FIRM, POINT__TO__POINT, OFF__PEAK, N/A, pub/AEP/incoming, 199702423000000ES, 19970424000000ES, 24.50, Y,SC:(cust:SP);RV:(cust:SP);RF(cust:RQ);EI:(cust:R123); SP:(custR234); SU:(cust:R345), PO123, S123, R765, D123, Standard daily reservation, No error↵
200, N, AEP, 123456789, ABC/XY, CE, AMPO,,,5, HOURLY, NON-FIRM, POINT__TO__POINT, OFF__PEAK, N/A, pub/AEP/incoming, 199702423060000ES, 19970423070000ES, 2.50, Y,SC:(cust:SP); RV:(cust:SP);RF(cust:RQ);EI:(cust:R123); SP:(custR234); SU;(cust:R345), P0123, S123, R765, D123, First piece of profile spanning 5 records, No error↵
200, Y,,,,,,,, 10,,,,,,,19970423070000ES, 19970423080000ES,,,,,,,,Second piece, No error↵
200, Y,,,,,,,, 15,,,,,,,19970423080000ES, 199704232800000ES,,,,,,,,Third piece, No error↵
200, Y,,,,,,,, 10,,,,,,,19970423200000ES, 19970423210000ES,,,,,,,,Fourth piece, No error↵
200, Y,,,,,,,, 5,,,,,,,19970423210000ES, 19970423220000ES,,,,,,,,Fifth piece, No error↵
200, N, AEP, 123456789, ABC/XY, CE, MECS,,,20, HOURLY, FIRM, POINT__TO__POINT, OFF__PEAK, N/A, pub/AEP/incoming, 19970423040000ES, 19970423160000ES, 2.00, Y, SC:(cust:SP);RV:(cust:SP);RF(cust:RQ);EI:(cust:R123); SP:(custR234); SU:(cust:R345), P0123, S123, R765, D123, Standard hourly reservation after profiled reservation, No error↵

b. Submission of Reassignment Information—Case 1: In the prior example, a reservation request was submitted to ''Rseler'' for 20MW of Hourly Non-firm service from 04:00 to 16:00. Assume that Rseler has previously reserved service for the CE-VP path for Daily Firm in amount of 50 MW on 4/23 under ASSIGNMENT__REF=7019, and Hourly Non-Firm in amount of 10 MW from 08:00 to 20:00 on 4/23 under ASSIGNMENT__REF=7880. Rseler must designate which transmission service rights are to be reassigned to Cust to satisfy the 20MW from 04:00 to 16:00. This reassignment information is conveyed by Rseler using the transsell Template when the reservation request is ACCEPTED. At the SELLER's discretion, rights are assigned from the Non-firm reservation first (ASSIGNMENT__REF=7880) with the balance taken up by the Firm reservation (ASSIGNMENT__REF=7019).

The only fields allowed in ''continuation'' records for *transsell* Template are REASSIGNED__REF, REASSIGNED__CAPACITY, REASSIGNED__START__TIME, and REASSIGNED__STOP__TIME. Price may not be negotiated for each ''segment'' in a capacity profile.

Input:

VERSION=1.2↵
TEMPLATE=transsell↵
OUTPUT__FORMAT=DATA↵
PRIMARY__PROVIDER__CODE=AEP↵
PRIMARY__PROVIDER__DUNS=123456789↵
DATA__ROWS=3↵
COLUMN__HEADERS=CONTINUATION__FLAG, ASSIGNMENT__REF, OFFER__PRICE, STATUS, STATUS__COMMENTS, ANC__SVC__LINK, SELLER__COMMENTS, REASSIGNED__REF REASSIGNED__CAPACITY, REASSIGNED__START__TI

SIGNED__STOP__TIME N. 8236, 2.00, ACCEPTED, Status comments here,SC:(cust:SP);RV;(cust:SP);RF(cust:RQ);EI:(cust:R123);SP:(custR234);SU:(cust:R345), Seller comments here, 7019, 20, 19970423040000ES, 19970423080000ES↵
Y,,,,,,,7880, 10, 19970423080000ES, 19970423160000ES↵
Y,,,,,,,7019, 10, 19970423080000ES, 19970423160000ES↵

Response:

VERSION=1.2↵
TEMPLATE=transsell↵
OUTPUT__FORMAT=DATA↵
PRIMARY__PROVIDER__CODE=AEP↵
PRIMARY__PROVIDER__DUNS=123456789↵
DATA__ROWS=3↵
COLUMN__HEADERS=RECORD__STATUS, CONTINUATION__FLAG, ASSIGNMENT__REF, OFFER__PRICE, STATUS, STATUS__COMMENTS, ANC__SVC__LINK, SELLER__COMMENTS, REASSIGNED__REF, REASSIGNED__CAPACITY, REASSIGNED__START__TIME, REASSIGNED__STOP__TIME, ERROR__MESSAGES 200, N. 8236, 2.00, ACCEPTED, Status comments here,SC:(cust:SP);RV:(cust:SP);RF(cust:RQ); EI:(cust:R123); SP:(cust:R234);SU:(cust:R345), Seller comments here, 7019, 20, 19970423040000ES, 19970423080000ES.↵
200 Y,,,,,,,7880, 10, 19970423080000ES, 19970423160000ES,↵
200 Y,,,,,,,7019, 10, 19970423080000ES, 19970423160000ES,↵

c. Submission of Reassignment Information—Case 2: Primary provider, AEP, is notified of a sale/assignment of transmission service right from ''Resell'' to ''cust''. The parameters of the new reservation are for 10MW on 4/23 for ''off-peak'' hours (00:00–06:00 and 22:00–24:00) on POR/POD CE–VP. Rseler is assigning rights to 10MW from a prior reservation for the CE–VP path for Daily Firm in amount of 50 MW on 4/23 under ASSIGNMENT__REF=7019 to Cust. AEP would submit the following information using the transassign Template to post this (re)sale. The only fields allowed in ''continuation'' records for the transassign Template are CAPACITY, START__TIME, STOP__TIME, REASSIGNED__REF, REASSIGNED__CAPACITY, REASSIGNED__START__TIME, and REASSIGNED__STOP__TIME.

Even though there is a one-to-one correspondence between the segments of the new reservations and the reassignment of service from a prior reservation, it is entirely possible that a reservation spanning a single contiguous period would require multiple continuation records to convey reassignment information, and vice versa.

Fields for CUSTOMER__NAME and SELLER__NAME were used to convey user names for subsequent resolution of contact information from user registration.

Input:

VERSION=1.2↵
TEMPLATE=transassign↵
OUTPUT__FORMAT=DATA↵
PRIMARY__PROVIDER__CODE=AEP↵
PRIMARY__PROVIDER__DUNS=123456789↵
DATA__ROWS=2↵
COLUMN__HEADERS=CONTINUATION__FLAG, CUSTOMER__CODE, CUSTOMER__DUNS, PATH__NAME, POINT__OF__RECEIPT, POINT__OF__DELIVERY, SOURCE, SINK, CAPACITY, SERVICE__INCREMENT, TS__CLASS, TS__TYPE, TS__PERIOD, TS__SUBCLASS, START__TIME, STOP__TIME, OFFER__PRICE, SALE__REF, POSTING__NAME, REASSIGNED__REF, REASSIGNED__CAPACITY, REASSIGNED__START__TIME, REASSIGNED__STOP__TIME, SELLER__COMMENTS↵
N, Resler, 456123789, Cust, 987654321, , CE, VP, , , 10, HOURLY, NON-FIRM, POINT__TO__POINT, OFF__PEAK, N/A, 19970423000000ES, 19970423060000ES, 2.00, Joe Smith, Jane Doe, N, 19970422121354ES, , 7019, 10, 19970423000000ES, 19970423060000ES, Seller comments go here↵
Y, , , , , , , , , , 10, , , , , , 19970423220000ES, 19970424000000ES, , , , , , , 7019, 10, 19970423220000ES, 19970424000000ES↵

Response:

REQUEST__STATUS=200↵
TIME__STAMP=19970422144520ES↵
VERSION=1.2↵
TEMPLATE=transassign↵
OUTPUT__FORMAT=DATA↵
PRIMARY__PROVIDER__CODE=AEP↵
PRIMARY__PROVIDER__DUNS=123456789↵
DATA__ROWS=2↵
COLUMN__HEADERS=RECORD__STATUS, CONTINUATION__FLAG, ASSIGNMENT__REF, SELLER__CODE, SELLER__DUNS, CUSTOMER__CODE, CUSTOMER__DUNS, AFFILIATE__FLAG, PATH__NAME, POINT__OF__RECEIPT, POINT__OF__DELIVERY, SOURCE, SINK, CAPACITY, SERVICE__INCREMENT, TS__CLASS, TS__TYPE, TS__PERIOD, TS__SUBCLASS, START__TIME, STOP__TIME, OFFER__PRICE, SELLER__NAME, CUSTOMER__NAME, TIME__QUEUED, SALE__REF, REASSIGNED__REF, REASSIGNED__CAPACITY, REASSIGNED__START__TIME, REASSIGNED__STOP__TIME, SELLER__COMMENTS, ERROR__MESSAGE↵
200, N, 8207, Rseler, 456123789, Cust, 987654321, N, , CE, VP, , , 10, HOURLY, FIRM, POINT__TO__POINT, OFF__PEAK, N/A 19970423000000ES, 19970423060000ES, 2.00, Joe Smith, Jane Doe, 19970422121354ES, , 7019, 10, 19970423000000ES, 19970423060000ES, Seller comments go here,↵

200, Y, , , , , , , , , , , , 10, , , , , , 19970423220000ES, 19970424000000ES,,,,,, 7019, 10, 19970423220000ES, 19970424000000ES,,↵

d. Query of Transmission Reservation Status: The following typical response to a transstatus query might be delivered for 4/23 based on prior examples. Note that the only fields returned in ''continuation'' records are, CAPACITY, START__TIME, STOP__TIME, REASSIGNED__REF, REASSIGNED__CAPACITY, REASSIGNED__START__TIME, and REASSIGNED__STOP__TIME (price fields are debatable).

Input:

<appropriate query name/value pairs to return reservations for 4/23>

Response:

REQUEST__STATUS=200↵
TIME__STAMP=19970423040523ES↵
TEMPLATE-transstatus↵
OUTPUT__FORMAT=DATA↵
PRIMARY__PROVIDER__CODE=AEP↵
PRIMARY__PROVIDER__DUNS=123456789↵
DATA__ROWS=11↵
COLUMN__HEADERS=CONTINUATION__FLAG, ASSIGNMENT__REF, SELLER__CODE, SELLER__DUNS, CUSTOMER__CODE, CUSTOMER__DUNS, AFFILIATE__FLAG, PATH__NAME, POINT__OF__RECEIPT, POINT__OF__DELIVERY, SOURCE, SINK, CAPACITY, SERVICE__INCREMENT, TS__CLASS, TS__TYPE, TS__PERIOD, TS__SUBCLASS, START__TIME, STOP__TIME, CEILING__PRICE, OFFER__PRICE, BID__PRICE, PRECONFIRMED, ANC__SVC__LINK, ALTERNATE__SERVICE__FLAG, POSTING__REF, SALE__REF, REQUEST__REF, DEAL__REF, NEGOTIATED__PRICE__FLAG, STATUS, STATUS__COMMENTS, TIME__QUEUED, TIME__OF__LAST__UPDATE, PRIMARY__PROVIDER__COMMENTS, SELLER__COMMENTS, CUSTOMER__COMMENTS, SELLER__NAME, SELLER__PHONE, SELLER__FAX, SELLER__EMAIL, CUSOMTER__NAME, CUSTOMER__PHONE, CUSTOMER__FAX, CUSTOMER__EMAIL, REASSIGNED__REF, REASSIGNED,__CAPACITY, REASSIGNED__START__TIME, REASSIGNED__STOP__TIME5
N, 8207, Rseler, 456123789, A Cust, 987654321, N, CE, VP, , , 10, HOURLY, FIRM, POINT__TO__POINT, OFF__PEAK, N/A, 19970423000000ES, 19970423060000ES, 2.25, 2.00, 6.20, N,SC:(cust:SP); RV:(cust:SP); RF(cust:RQ); EI:(cust:R123); SP:(custR234); SU:(cust:R345), N, , , , , N, CONFIRMED, , 19970422121354ES,, TP Comments, Seller comments go here, Customer comments, Joe Smith, (888)–123–4567, (888)–123–1231, jsmith@xyz.com, Jane Doe, (999)–123–4567, (999)–123–8823, , 7019, 10, 19970423000000ES, 19970423060000ES↵
Y, , , , , , , , , , , , 10, , , , , , 19970423220000ES, 19970424000000ES, ,7019, 10, 19970423220000ES, 19970424000000ES↵
N, 8234, Rseler, 456123789, ACust, 987654321, N, , CE, MECS, , , 35 DAILY, FIRM, POINT__TO__POINT, OFF__PEAK, N/A 19970423000000ES, 1997042360000ES, 42.00, 24,50, N,SC:(cust:SP); RV:(cust:SP); RES:(cust:RQ); EI:(cust:R123); SP:(custR234);SU:(cust:R345),N, , , , , N, CONFIRMED, , 19970422121354ES, , Standard daily reservation, System Operator, Customer comments, Frank Orth, (999)–123–4567, (999)–123–1231, jsmith@xyz.com, Jane Doe, (999)–123–4567, (999)–123–8823, 7019, 10, 19970423000000ES, 19970423060000ES↵
N, 8235, AEP, 123456789, Cust, 987654321, N, , CE, AMPO, , , 5, HOURLY, NON-FORM, POINT__TO__POINT; OFF__PEAK, N/A, 19970423060000ES, 19970423070000ES, 2.50, 2.50, 6.20, N, SC:(cust:SP); RV:(cust:SP); RF(cust:RQ); EI:(cust:R123); SP:(cust:R234); SU:(cust:R345),N, , , , , N, CONFIRMED, , 19970422160523ES, , Profile verified, First piece, Customer comments, System Operator, (888)–123–4567, (888)–123–1231, jsmith@xyz.com, Jane Doe, (999)–123–4567, (999)–123–8823,, 7019, 10, 19970423000000ES, 19970423060000ES↵
Y, , , , , , , , , , , , , 10, , , , , , ,19970423070000ES, 1997042380000ES, ,↵
Y, , , , , , , , , , , , ,15, , , , , , ,19970423080000ES, 19970423200000ES, ,↵
Y, , , , , , , , , , , , ,10, , , , , , ,19970423200000ES, 19970423210000ES, ,↵
Y, , , , , , , , , , , , ,5, , , , , , ,19970421000000ES, 19970423220000ES, ,↵
N. 8236, Rseler, 456123789, Cust, 987654321, N, , CE, VP, , , 20, HOURLY, FIRM, POINT__TO__POINT, OFF__PEAK, N/A 19970424040000ES, 19970424160000ES, 2.00, 2.50, 6.20, N, , , , , , CONFIRMED, , 19970422160523ES, , Bid price refused, Negotiated OFFER__PRICE accepted, Joe Smith, (888)–123–4567, (888)–123–1231, jsmithxyz.com, Jane Doe, (999)–123–4567, (999)–123–8823, 7019, 20, 19970423040000ES, 19970423080000ES↵
Y, , , , , , , , , , , , , , , , , , , ,

d. The Customer may WITHDRAW request via transcust Template at any time up to point where the Seller sets STATUS to ACCEPTED.

e. Once the STATUS is CONFIRMED, the OFFER__PRICE officially becomes the terms of the reservation.

4.4.6.2 Negotiations without Preconfirmation

e. The Customer submits a transmission reservation request with the BID__PRICE less than the CEILING__PRICE via the transrequest Template. Initially the STATUS is set to QUEUED by OASIS.

b. The Seller has the option of setting the STATUS VIA the transsell Template to one of the following: RECEIVED, STUDY, ACCEPTED, OFFER, or REFUSED.

c. The Seller determines that the BID__PRICE is too low, sets the OFFER__PRICE to the price he wants, and sets the STATUS to OFFER via the transsell Template.

d. The Customer agrees to the OFFER__PRICE, sets the BID__PRICE equal to the OFFER__PRICE, and sets the STATUS to CONFIRMED via the transcust Template.

The OFFER__PRICE with the STATUST of CONFIRMED locks in the terms of the reservation.

4.4.6.3 Multiple Step Negotiations

a. The Customer submits a transmission reservation request with the BID__PRICE less than the CEILING__PRICE via the transrequest Template. Initially the STATUS is set to QUEUED by OASIS.

b. The Seller has the option of setting STATUS via the transsell Template to one of the following: RECEIVED, STUDY, ACCEPTED, OFFER, or REFUSED.

c. The Seller determines that the BID__PRICE is too low, sets the OFFER__PRICE to the desired value, and sets the STATUS to OFFER via the transsell Template.

d. The Customer responds to the new OFFER__PRICE with an updated BID__PRICE and sets the STATUS to REBID for re-evaluation by the Seller.

e. The Seller determines that the BID__PRICE now is acceptable and sets the STATUS to ACCEPTED via the transsell Template. The transition to ACCEPTED state requires the OFFER__PRICE to be set to the BID__PRICE: accepting a reservation with an OFFER__PRICE different from BID__PRICE would require the STATUS be set to OFFER rather than ACCEPTED (see item c).

f. The Customer agrees to the OFFER__PRICE and sets the STATUS to CONFIRM via the transcust Template.

g. The OFFER__PRICE with the STATUS as CONFIRMED locks in the terms of the reservation.

4.4.6.4 Negotiations Refused by Seller

a. The Customer submits a transmission reservation request with the BID__PRICE less than the CEILING__PRICE via the transrequest Template. Initially the STATUS is set to QUEUED by OASIS.

b. The Seller has the option of setting the STATUS via the transsell Template to one of the following: RECEIVED, STUDY, ACCEPTED, OFFER, or REFUSED.

c. The Seller determines that the BID__PRICE is too low, sets OFFER__PRICE to his desired value, and sets STATUS to OFFER via the transsell Template.

d. The Customer responds to OFFER__PRICE with updated BID__PRICE and sets the STATUS to REBID via the transcust Template for re-evaluation by Seller.

e. The Seller breaks off all further negotiations by setting the STATUS or REFUSED.

4.4.6.5 Negotiations Withdrawn by Customer

a. The Customer submits a transmission reservation request with the BID__PRICE less than the CEILING__PRICE via the transrequest. Initially the STATUS is set to QUEUED by OASIS.

b. The Seller has the option of setting STATUS via the transsell Template to one of the following: RECEIVED, STUDY, ACCEPTED, OFFER, or REFUSED.

c. The Seller determines that the BID__PRICE is too low, sets the OFFER__PRICE to his desired value, and sets the STATUS to OFFER via the transsell Template.

d. The Customer responds to the OFFER__PRICE with an updated BID__PRICE and sets the STATUS to REBID for re-evaluation by Seller.

e. The Seller determines that the BID__PRICE is still too low, sets the OFFER__PRICE to another value, and sets STATUS to OFFER via the transsell Template.

f. The Customer breaks off all further negotiations by setting STATUS to WITHDRAWN (or the customer/seller could go through additional iterations of REBID/OFFER until negotiations are broken off or the reservation is CONFIRMED).

4.5 Information Supported by WEB Page

There shall be a Web page on each OASIS node with information on requesting the text file of the tariffs and service agreements.

5. Performance Requirements

A critical aspect of any system is its performance. Performance encompasses many issues, such as security, sizing, response to user requests, availability, backup, and other parameters that are critical for the system to function as desired. The following sections cover the performance requirements for the OASIS.

5.1 Security

Breaches of security include many inadvertent or possibly even planned actions. Therefore, several requirements shall be implemented by the TSIPs to avoid these problems:

a. Provider Update of TS Information: Only Providers, including Secondary Providers, shall be permitted to update their own TS Information.

b. Customer Input Only ASCII Text: TSIPs shall be permitted to require that inputs from Customers shall be filtered to permit only strict ASCII text (strip bit 8 from each byte).

c. Provider Updating Over Public Facilities: If public facilities are involved in the connection between a Provider and the OASIS Node, the Provider shall be able to update this TS Information only through the use of ASCII or through encrypted files.

d. User Registration and Login: All Users shall be required to register and login to a Provider's Account before accessing that Provider's TS Information.

e. User Passwords: All Users shall enter their personal password when they wish access to TS Information beyond the lowest Access Privilege.

f. Service Request Transactions: Whenever Service Request transactions are implemented entirely over the OASIS, both an individual Customer password for the request, and an individual Provider password for the notification of acceptance shall be required.

g. Data Encryption: Sophisticated data encryption techniques and the ''secure id'' mechanisms being used on the public Internet shall be used to transfer sensitive data across the Internet and directly between OASIS Nodes.

h. Viruses: Since only data is being transmitted between the OASIS Nodes and the Users, viruses are unlikely to be passed between them. Therefore, TSIPs shall be responsible for ensuring that the OASIS Nodes are free from viruses, but need not screen data exchanges with Users for viruses.

i. Performance Log: TSIPs shall keep a log on User usage of OASIS resources.

j. Disconnection: TSIPs shall be allowed to disconnect any User who is degrading the performance of the OASIS Node through the excessive use of resources, beyond what is permitted in their Service Level Agreement.

k. Premature Access: The TSIP log shall also be used to ensure that Users who are affiliated with the Provider's company (or any other User) do not have access to TS information before it is publicly available.

l. Firewalls: TSIPs shall employ security measures such as firewalls to minimize the possibility that unauthorized users shall access or modify TS Information or reach the Provider or User systems. Interfaces through Public Data Networks or the Internet shall be permitted as long as these security requirements are met.

m. Certificates and Public Key Standards (optional): Use of alternative forms of login and authentication using certificates and public key standards is acceptable.

5.2 Access Privileges

Users shall be assigned different Access Privileges based on external agreements between the User and the Provider. These Access Privileges are assocated with individual Users rather than just a company, to ensure that only authorized Users within a company have the appropriate access.

The following Access Privileges shall be available as a minimum:

a. Access Privilege Read-Only: The User may only read publicy availabe TS Information.

b. Access Privilege for Transaction: The Customer is authorized to transact Service Requests.

c. Access Privilege Read/Write: A Secondary Provider shall have write access to his own Provider Account on an OASIS Node.

5.3 OASIS Response Time Requirements

TSIPs can only be responsible for the response capabilities of two portions of the Internet-based OASIS net work:

- The response capabilities of the OASIS Node server to process interactions with Users
- The bandwidth of the connection(s) between the OASIS Node server and the Internet.

Therefore, the OASIS response time requirements are as follows:

a. OASIS Node Server Response Time: The OASIS Node server shall be capable of supporting its connection(s) to Users with an average aggregate data rate of at least ''A'' bits per second. ''A'' is defined as follows:

A = N * R bits/sec
where
N = 5% of registered Customers.
and
R = 28,800 bits/sec per Customer.

b. OASIS Node Network Connection Bandwidth: The bandwidth ''B'' of the OASIS Node conection(s) to the Internet shall be at least:

B = 2 * A bits/sec

C. Time to Meet Response Requirements: The minimum time response shall be met within 1 month of User registration for any single new User. If more than 10 new Users register in one month, 2 months lead time shall be permitted to expand/upgrade the OASIS Node to meet the response requirements.

5.4 OASIS Provider Account Availability

The following are the OASIS Provider Account availability requirements:

a. OASIS Provider Account Availability: The availability of each OASIS Provider account on an OASIS Node shall be at least 98.0% (downtime of about 7 days per year).

Availability is defined as:

$$\%\ \text{Availability} = \frac{(1 - \text{Cumulative Provider Account Downtime})}{\text{Total Time}} * 100$$

A Provider account shall be considered to be down, and downtime shall be accumlated, upon occurrence of any of the following:

1. One or more Users cannot link and log on to the Provider account. The downtime accumulated shall be calculated as:

3 **Σ** for affected Users of 1/n * (Login Time), which is the time used by each affected User to try to link and log on to the Provide account, and where ''n'' is the total number of Users actively registered for the Provider account.

2. One or more Users cannot access TS Information once they have logged on to a Provider account. The downtime accumulated shall be calculated as:

3 **Σ** for affected Users of 1/n * (Access Time), which is the time used by each affected User to try to access data, and where ''n'' is the total number of Users actively registered for that Provider.

3. A five (5) minute penalty shall be added to the cumulative downtime for every time a User loses their connection to a Provider's account due to an OASIS Node momentary failure or problem.

5.5 Backup and Recovery

The following backup and recovery requirements shall be met:

a. Normal Backup of TS Information: Backup of TS Information and equipment shall be provided within the OASIS Nodes so that no data or transaction logs are lost or become inaccessible by Users due to any single point of failure. Backed up data shall be no older than 30 seconds. Single points of failure include the loss of one:

- Disk drive or other storage device
- Processor
- Inter-processor communications (e.g., LAN)
- Inter-OASIS communications
- Software application
- Database
- Communication ports for access by Users
- Any other single item which affects the access of TS Information by Users

b. Spurious Failure Recovery Time: After a spurious failure situation, all affected Users shall regain access to all TS Information within 30 minutes. A spurious failure is a temporary loss of services which can be overcome by rebooting a system or restarting a program. Permanent loss of any physical component is considered a catastrophic failure.

c. Long-Term Backup: Permanent loss of critical data due to a catastrophic failure shall be minimized through off-line storage on a daily basis and through off-site data storage on a periodic basis.

d. Catastrophic Failure Recovery: Recovery from a catastrophic failure or loss of an OASIS Node may be provided through the use of alternate OASIS Nodes which meet the same availability and response time requirements. TSIPs may set up prior agreements with other TSIPs as to which Nodes will act as backups to which other Nodes, and what procedure will be used to undertake the recovery. Recovery from a catastrophic failure shall be designed to be achieved within 24 hours.

5.6 Time Synchronization

The following are the time requirements:

a. Time Synchronization: Time shall be synchronized on OASIS Nodes such that all time stamps will be accurate to within ''0.5 second of official time. This synchronization may be handled over the network using NTP, or may be synchronized locally using time standard signals (e.g. WWVB, GPS equipment).

b. Network Time Protocol (NTP): OASIS Nodes shall support the Internet tool for time synchronization, Network Time Protocol (NTP), which is described in RFC–1350, version 3, so that Users shall be able to request the display and the downloading of current time on an OASIS Node for purposes of user applications which might be sensitive to OASIS time.

5.7 TS Information Timing Requirements

The TS Information timing requirements are as follows, except they are waived during emergencies:

a. TS Information Availability: The most recent Provider TS information shall be available on the OASIS Node within 5 minutes of its required posting time at least 98% of the time. The remaining 2% of the time the TS Information shall be available within 10 minutes of its scheduled posting time.

b. Notification of Posted or Changed TS Information: Notification of TS Information posted or changed by a Provider shall be made available within 60 seconds of the log.

c. Acknowledgment by the TSIP: Acknowledgment by the TSIP of the receipt of User Purchase requests shall occur within 1 minute. The actual negotiations and agreements on Purchase requests do not have time constraints.

5.8 TS Information Accuracy

The following requirements relate to the accuracy of the TS information:

a. TS Information Reasonability: TS information posted and updated by the Provider shall be validated for reasonability and consistency through the use of limit checks and other validation methods.

b. TS Information Accuracy: Although precise measures of accuracy are difficult to establish, Providers shall use their best efforts to provide accurate information.

5.9 Performance Auditing

The following are the performance auditing requirements:

a. User Help Desk Support: TSIPs shall provide a ''Help Desk'' that is available at least during normal business hours (local time zone) and normal work days.

b. Monitoring Performance Parameters: TSIPs shall use their best efforts to monitor performance parameters. Any User shall be able to read or down load these performance statistics.

5.10 Migration Requirements

Whenever a new version of the S&CP is to be implemented, a migration plan will be developed for cutting over to the new version.

Appendix A—Data Element Dictionary

Version 1.2

May 27, 1998

Data dictionary element name	Alias	Field format: minimum characters (type of ASCII) maximum characters	Restricted values	Definition of data element
AFFILIATE__FLAG	AFFLAG	1(ALPHANUMERIC)3	Valid Values YES NO	Set to YES if customer is an affiliate of the provider.
ANC__SERVICE__TYPE	ANCTYPE	1(ALPHANUMERIC)20	Valid types • EL • SP • SU • RV • RF • SC • (Registered).	El—Energy Imbalance. EP—Spinning Reserve. SU—Supplemental Reserve. RV—Reactive supply and Voltage Control. RF—Regulation and Frequency response. SC—Scheduling, system Control and Dispatch. (Registered) must be registered with www.tsin.com and listed in the ANCSERV template.
ANC__SVC__LINK	ANCSVCLINK.	1(ALPHANUMERIC)300	Formatted string as follows. SC:(AA); RV: (AA); RF: (AA[:xxx[:yyy[:nnn]]]); EL: (AA[:xxx[:yyy[:nnn]]]); SP: (AA[:xxx[:yyy[:nnn]]]); SU (AA[:xxx[:yyy[:nnn]]]); (Registered): (AA[:xxx[:yyy[:nnn]]]);	The method for linking ancillary services to a transmission service request. The provider and capacity of each ancillary service is identified using the formated string: SC:(AA); RV:(AA); RF:AA[:xxx[:yyy[:nnn]]]); El: (AA[:xxx[:yyy[:nnn]]]); SP:(AA[:xxx[:yyy[:nnn]]]):SU: (AA|:xxx|:yyy| nn|||): [Registered):(AA[:xxx[:yyy[:nnn]]]) where AA is the appropriate PRIMARY__PROVIDER__CODE, SELLER__CODE; or CUSTOMER__CODE, and represents the company providing the ancillary services. ''AA'' may be unspecified for ''xxx'' type identical to ''FI'', in which case the ''::'' character must be present and precede the ''FT'' type. If multiple ''AA'' terms are necessary, then each ''AA'' grouping will be enclosed within parenthesis, with the overall group subordinate to the ANC__SVC__TYPE: specified within parenthesis. and where xxx represents either: —''FT'' to indicate that the Customer will determine ancillary services at a future time, or —''SP'' to indicate that the Customer will self-provide the ancillary services, or

Data dictionary element name	Alias	Field format: minimum characters (type of ASCII) maximum characters	Restricted values	Definition of data element
				—''RQ'' to indicate that the Customer is asking the OASIS to initiate the process for making an ancillary services reservation with the indicated Provider or Seller on behalf of the Customer. The Customer must then continue the reservation process with the Provider or Seller. If the transmission services request is for preconfirmed service, then the ancillary services shall also be preconfirmed, or —''AR'' to indicate an assignment reference number sequence follows. The terms ''yyy'' and ''nnn'' are subordinate to the xxx type of ''AR'' yyy represents the ancillary services reservation number (ASSIGNMENT__REF) and nnn represents the capacity of the reserved ancillary services. Square brackets are used to indicated optional elements and are not used in the actual linkage itself. Specifically, the :yyy is applicable to only the ''AR'' term and the :nnn may optionally be left off if the capacity of ancillary services is the same as for the transmission services, and optionally multiple ancillary reservations may be indicated by additional (xxx[:yyy[:nnn]]) enclosed within parenthesis. If no capacity amount is indicated, the required capacity is assumed to.
ANC__SVC__REQ	ANCSVCREQ.	1(ALPHANUMERIC)100	EI: (M.R.O.U); SP; (M.R.O.U);. SU: (M.R.O.U); RV: (M.R.O.U): RF: (M.R.O.U); SC: (M.R.O.U): (registered): (M.R.O.U)	Ancillary services required for a transmission services offering. The appropriate letter (M.R.O.U) will be assigned to each of the six Proforma FERC ancillary services (see ANC__SERVICE__TYPE), where the letters mean the following: (M) Mandatory, which implies that the Primary Provider must provide the ancillary service (R) Required, which implies that the ancillary service is required, but not necessarily from the Primary Provider (O) Optional, which implies that the ancillary service is not necessarily required, but could be provided. (U) Unknown, which implies that the requirements for the ancillary service are not known at this time.
ALTERNATE__SERVICE__FLAG.	ALTSVCFLG	2(ALPHANUMERIC)3	Defaulted to ''YES''	Used as a flag to identify this reservation as a NON-FIRM use of FIRM transmission services on an alternate point of delivery.

Data dictionary element name	Alias	Field format: minimum characters (type of ASCII) maximum characters	Restricted values	Definition of data element
ASSIGNMENT__REF	AREF	1(ALPHANUMERIC)12	Unique value	A unique reference number assigned by a Transmission Information Provider to provide a unique record for each transmission or ancillary service request. A single transmission or ancillary service request will be over a contiguous time period, i.e. from a START__TIME to an STOP__TIME.
BID__PRICE	BIDPR	1(NUMERIC)5 +“.” +2(NUMERIC)12	Positive number with 2 decimals.	The current bid price of a Service in dollars and cents. Used by Customers to designate a price being bid.
CAPACITY	CAP	1(NUMERIC)12	Non-negative number in units of MW.	Transfer capability is the measure of the ability of the interconnected electric system to readily move or transfer power from one area to another over all transmission lines (or paths) between those areas under specified system conditions. In this context ‘‘area’’ may be an individual electric system, powerpool, control area, subregion, or NERC region or portion thereof.
CAPACITY__CURTAILED	CAPCUR	1(NUMERIC)12	Non-negative number in units of MW.	The amount of transfer capability curtailed by the Primary provider for emergency reasons.
CAPACITY__SCHEDULED	CAPSCH	1(NUMERIC)12	Non-negative number in units of MW.	Transfer capability scheduled on each path.
CATEGORY	CAT	1(ALPHANUMERIC)25	Valid name from CATEGORY in LIST Template.	A name to be used to categorize messages. Valid names would include: *Discount, Want-Ad, Curtailment, Outage, Oasis Maint Notice.*
CELING__PRICE	CEILPR	1(NUMERIC)5 + “.” + 2(NUMERIC)2.	Positive number with 2 decimals..	Ceiling price of the Service as entered by the Transmission Provider.
COLUMN__HEADERS	HEADERS	1(ALPHANUMERIC) Limited to all the elements nameS in one Template.	Headers surrounded with A and separated by commas. Limited to valid Template element names. Must use full element name and not alias.	Example: COLUMN__HEADER= APATH__NAME’’, POINT__OF__RECEIPT’’, POINT__ OF__DELIVERY’’, ‘‘SOURCE’’, ‘‘SINK’’.
CONTINUATION__FLAG	CONT	1(ALPHANUMERIC)1	‘‘Y’’ OR ‘‘N’’	Indicates whether or not this record is a continuation from the previous record.
CONTROL__AREA	AREA	1(ALPHANUMERIC)20	Valid name of a control area	A part of the power system with metered tie lines and capable of matching generation and load while meeting scheduled interchange. Location of Ancillary services is my CONROL__AREA.
CURTAILMENT__OPTIONS	CUROPT	1(ALPHANUMERIC)80	Free form text	Customer options, if any, to avoid curtailment.
CURTAILMENT__PROCEDURES.	CURPROC	(ALPHANUMERIC)80	Free form text	Curtailment procedures to be followed in the event of a curtailment.
CURTAILMENT__REASON	CURREAS	(ALPHANUMERIC)80	Free form text	Reason for curtailment of service.
CUSTOMER__CODE	CUST	1(ALPHANUMERIC)6	Unique value, registered on TSIN.COM.	Any entity (or its designated agent) that is eligible to view OASIS information, to execute a service agreement, and/or to receive transmission service.
CUSTOMER__COMMENTS	CUSTCOM	1(ALPHANUMERIC)80	Free-form text	Informative text.
CUSTOMER__DUNS	CUSTDUNS	9(NUMERIC)9	Unique DUNS number	Unique DUNS number for a Customer.
CUSTOMER__EMAIL	CUSTEMAIL	1(ALPHANUMERIC)25	Valid Internet E-Mail address	Internet E-Mail address of Customer contract person.

Data dictionary element name	Alias	Field format: minimum characters (type of ASCII) maximum characters	Restricted values	Definition of data element
CUSTOMER__FAX	CUSTEFAX	14(ALPHANUMERIC)20	Area code and telephone number, plus any extensions (aaa)-nnn-nnnn xnnnn.	Fax phone number of Customer contract person.
CUSTOMER__NAME	CUSTNAME	(ALPHANUMERIC)25	Free form text	Name of Customer contract person.
CUSTOMER__PHONE	CUSTPHON	14(ALPHANUMERIC)20	Area code and telephone number, plus any extensions (aaa)-nnn-nnnn xnnnn.	Telephone of Customer contact person.
DATA__ROWS	ROWS	1(NUMERIC) unlimited	Positive Number	Number of records (rows) of data exclusive of header information that are to be uploaded or downloaded in a file.
DATE__TIME__EFFECTIVE	TIMEEFCT	16(ALPHANUMERIC)16	Valid date and time in seconds yyyy+mo+dd+hh +mm+ss+tz.	Date and time a message or service offer is in effect.
DATE__TIME__POSTED	TIMEPSTD	16(ALPHANUMERIC)16	Valid date and time in seconds yyyy+mo+dd+hh +mm+ss+tz.	Date and time to seconds a message or service offered was posted.
DEAL__REF	DREF	1(ALPHANUMERIC)12	Unique value, Assigned by Customer.	The unique reference assigned by a Customer to two or more service purchases to identify each of them as related to others in the same power service deal. These requests may be related to each other in time sequence through a single Provider, or as a series of wheels through multiple Providers, or a combination of both time and wheels. The User uses the DEAL__REF to uniquely identify a combination of requests relating to a particular deal.
DISCRETION__DESCRIPTION	DISCDESC	0(ALPHANUMERIC)1000	Free form text	A detailed description of the discretion being reported.
ELEMENT__NAME	ELEMENT	1(ALPHANUMERIC)40	Valid Template element name.	Template element name as indicated in data dictionary.
EMPLOYEE__NAME	EMPNAME	1(ALPHANUMERIC)25	Free form text	Name of person who is transferring from one position to another.
ERROR__MESSAGE	ERROR	1(ALPHANUMERIC)250	Free form text	Error message related to a RECORD__STATUS or REQUEST__STATUS.
FORMER__COMPANY	FORMCO	1(ALPHANUMERIC)25	Free form text	Former company of the person who is transferring.
FORMER__DEPARTMENT	FORMDEPT	1(ALPHANUMERIC)25	Free form text	Former department of the person who is transferring.
FORMER__POSITION	FORMPOS	1(ALPHANUMERIC)25	Free form text	Former position held by the person who is transferring.
INTERFACE__TYPE	INTERFACE	1(ALPHANUMERIC)1	I,E	Type of interface define by path: Internal (I) to a control area or External (E) to a control area.
LIST__ITEM	ITEM	1(ALPHANUMERIC)50	Free form text	Item from list, such as list of SELLERs, list of PATHs, list of PORs, list of PODs, Lists of SERVICE__INCREMENT, TS__CLASS, TS__TYPE, TS__PERIOD, NERC__ CURTAILMENT__PRIORITY, OTHER__CURTAILMENT__ PRIORITY, SERVICE__INCREMENT, CATEGORY List of TEMPLATEs.
LIST__ITEM__ DESCRIPTION	ITEMDESC	0(ALPHANUMERIC)100	Free form text	A detailed description of the LIST__ITEM.

Data dictionary element name	Alias	Field format: minimum characters (type of ASCII) maximum characters	Restricted values	Definition of data element
LIST__NAME	LIST	1(alphanumeric)25	LIST, SELLER, PATH, POR, POD, SERV-ICE__INCREMENT, TS__CLASS, TS__TYPE, TS__ PERIOD, TS__SUBCLASS, ANCIL-LARY__ SERVICE__ TYPE, CATEGORY, TEM-PLATE.	List of valid names for each of the types of lists. The minimum set of lists defined must be im-plemented.
MESSAGE	MSG	1(ALPHANUMERIC)200	Free form text	An informative text message.
NEGOTIATED__PRICE__FLAG	NGPRIFLG	1(ALPHANUMERIC)1	H, L, or blank	Set to H if OFFER__PRICE is higher than the currently post-ed price; set to L if OFFER__PRICE is lower than the currently posted price.
NERC__CURTAINMENT__ PRIORITY.	NERCURT	1(NUMERIC)1	Integer 1–7	One of the NERC seven curtail-ment priorities, documented in LIST templat.
NEW__COMPANY	NEWCO	1(ALPHANUMERIC)25	Free form text	New company of the person who is transferring.
NEW__DATA	NEWDATA	1(ALPHANUMERIC)200	Any valid date element value	For audit log, the new updated value of a Template data ele-ment after update.
NEW__DEPARTMENT	NEWDEPT	1(ALPHANUMERIC)25	Free form text	New department of the person who is transferring.
NEW__POSITION	NEWPOS	1(ALPHANUMERIC)25	Free form text	New position held by the person who is transferring.
OFFER__PRICE	OFFPR	1(NUMERIC)5 + "." + 2(NUMERIC)2.	Positive number with 2 deci-mals.	The current offered price of a Service in dollars and cents. Used by the Seller to indicate the offering price.
OFFER__START__TIME	OFFSTIME	16(ALPHANUMERIC)16	Valid Date and Time to sec-onds:. yyyy+mo+dd+hh+mmm+ ss+tz.	Start time of the window during which a Customer may request a discounted offer.
OFFER__ STOP__TIME	OFFSPTIME	16(ALPHANUMERIC)16	Valid Date and Time to sec-onds: yyyy+mo+dd+hh +mm+ss+tz.	Stop time of the window during which a Customer may request a discounted offer. (Expiration time of an offer).
OLD__DATA	OLDDATA	1(ALPHANUMERIC)200	Any valid data element value	For audit log, the old value of a Template data element prior to being updated. This element is not applicable in the audit log for transaction events.
OPTIONAL__CODE	N/A	0(ALPHANUMERIC)25	Unique path name within re-gion.	OPTIONAL__CODE—25 chars, unique for Path. If used for directionality, then the first 12 characters shall represent POR, followed by >->, followed by 12 characters which shall represent POD. Used by PATH__NAME.
OTHER__CURTAILMENT __PRIORITY.	OTHCUR	0(ALPHANUMERIC)8	Free form tect	Other than NERC curtailment pri-orities, such as regional curtail-ment priorities. Suggested for-mat region+number, for exam-ple MAPP4, WSCC7. Docu-mented in LIST template.
OUTPUT__FORMAT	FMT	4(ALPHANUMERIC)4	HTML, DATA	Format of response: HTML = hypertext markup lan-guage for presentation using a web browser. DATA = text for use in a downloaded file.
PATH__CODE	N/A	0(ALPHANUMERIC)12	Unique code for each path as defined by primary pro-vider.	Unique code within a Region for each path. Used by PATH__NAME.

Data dictionary element name	Alias	Field format: minimum characters (type of ASCII) maximum characters	Restricted values	Definition of data element
PATH__NAME	PATH	5(ALPHANUMERIC)50	Unique value	The unique name assigned to a single transmission line or the set of one or more parallel transmission lines whose power transfer capabilities are strongly interrelated and must be determined in aggregate. These lines are typically described as being on a path, corridor or interconnection in some regions, or as crossing an interface or cut-plane in other regions. Multiple lines may be owned by different parties and require prorating of capability shares. The name is constructed from the following codes, with each code separated by a ''/''. Trailing ''/'' may be omitted, if there are no values for OPTION__CODE and SPARE__CODE:. REGION__CODE—2 chars, unique to OASIS System PRIMARY__PROVIDER__CODE—4 chars, unique within Region. PATH__CODE—12 chars, unique for Primary Provider. OPTIONAL__CODE—25 chars, unique for Path. If used for directionality, then the first 12 characters shall represent POR, followed by >->, followed by 12 characters which shall represent POD SPARE__CODE—3 chars.
POINT__ OF__DELIVERY	POD	1(ALPHANUMERIC)12	Unique value within Primary Provider.	Point of Delivery is one or more point(s) of interconnection on the Transmission Provider's transmission system where capacity and/or energy transmitted by the Transmission Provider will be made available to the Receiving Party. This is used along with Point of Receipt to define a Path and direction of flow on that path. For internal paths, this would be a specific location(s) in the area. For an external path, this may be an area-to-area interface.
POINT__OF __RECEIPT	POR	1(ALPHANUMERIC)12	Unique value within Primary Provider.	Point of Receipt is one or more point(s) of interconnection on the Transmission Provider's transmission system where capacity and/or energy transmitted will be made available to the Transmission Provider by the Delivering Party. This is used along with Point of Delivery to define a Path and direction of flow on that path. For internal paths, this would be a specific location(s) in the area. For an external path, this may be an area-to-area interface.
POSTING__NAME	POSTNAME	1(ALPHANUMERIC)25	Free form text	Name of person who is posting the information on the OASIS.

Data dictionary element name	Alias	Field format: minimum characters (type of ASCII) maximum characters	Restricted values	Definition of data element
POSTING__REF	POSTREF	1(ALPHANUMERIC)12	Unique Value	Assigned by TSIP when Service or Message is received by TSIP. Unique number can be used by the user to modify or delete the posting.
PRECONFIRMED	PRECONF	2(ALPHA)3	YES or NO	Used by Customer to preconfirm sale in Template transrequest or ancrequest. If customer indicates sale is preconfirmed, then the response is YES and the customer does not need to confirm the sale.
PRICE__UNITS	UNITS	1(ALPHA)20	Free form text	The units used for CEILING__PRICE, OFFER__PRICE, and BID__PRICE. Examples: $/MWhr, $/MWmonth
PRIMARY__ PROVIDER__COMMENTS.	PPROVCOM	1(ALPHANUMERIC)80	Free form text	Informative text. Usually entered by the Primary Provider through a back end system.
PRIMARY__ PROVIDER__CODE.	PROVIDER	1(ALPHANUMERIC)4	Unique code	Unique code for each Primary Provider. used by PATH__NAME and in URL. Registered as part of URL at www.tsin.com.
PRIMARY__ PROVIDER__DUNS.	PPROVDUNS.	9(NUMERIC)9	Valid DUNS number	Unique code for each Primary. Provided by Dun and Bradstreet.
REASSIGNED__ CAPACITY	RASCAP	1(NUMERIC)12	Positive number, cannot exceed previous assigned capacity.	The amount of transfer capability that was reassigned from one entity to another.
REASSIGNED__ REF	REREF	1(ALPHANUMERIC)12	Unique value	When customer makes a purchase of a transmission service that was posted for resale and a new ASSIGNMENT__REF number is issued the previous ASSIGNMENT__REF number now becomes the REASSIGNMENT__REF. Also used by SELLER when posting transmission or ancillary services for resale to show the previous assignment reference number. Also used by the customer when making a request to use FIRM service as NON-FIRM over alternate points of delivery.
REASSIGNED__START__TIME	RESSTIME	16(ALPHANUMERIC)16	Valid date and time to seconds: yyyy+mo+dd+hh+tz	Beginning date and time of the reassigned transmission service.
REASSIGNED__STOP__TIME	RESSPIME	16(ALPHANUMERIC)16	Valid date and time to hour: yyyy+mo+dd+hh+tz	Date and time of the end of the transmission service that is reassigned to another User.
RECORD__STATUS	RECSTATUS.	1(NUMERIC)3	Error number	Record status indicating record was successful or error code if unsuccessful. 200=Successful

Data dictionary element name	Alias	Field format: minimum characters (type of ASCII) maximum characters	Restricted values	Definition of data element
REGION__CODE	N/A	1(ALPHANUMERIC)2	Unique within OASIS System.	Defined for NERC regions, with the following defined: E—ECAR. I—MAIN. S—SERC. T—ERCOT. A—MAPP. P—SPP. M—MAAC. N—NPCC. W—WSCC. Second character or digit reserved for subregion id as defined by each region.
REQUEST__REF	RREF	1(ALPHANUMERIC)12	Unique value	A reference uniquely assigned by a Customer to a request for service from a Provider.
REQUEST__STATUS	RSTATUS	1(NUMERIC)3	Error number	Message status indicating message was successful (if all RECORD__STATUS show success) or error code if any RECORD__STATUS showed unsuccessful. 200=Successful.
RESPONSE__TIME__LIMIT	RESPTL	16(ALPHANUMERIC)16	Valid date and time to seconds: yyyy+mo+dd+hh+mm+ss+tz	Date and time to seconds by when a response must be received from a Customer.
RESPONSIBLE__PARTY__NAME.	PARTNAME	1(ALPHANUMERIC)25	Free form text	The name of the person responsible for granting the discretion.
RETURN__TZ	TZ	2(ALPHANUMERIC)2	AD, AS, PD, PS, ED, ES, MD, MS, CD, CS, UT.	A time zone code, indicating the base time zone, and whether daylight saving time is to be used. This field may be set by a Customer in a query. Returned date and time data is converted to this time zone.
SALE__REF	SREF	1(ALPHANUMERIC)12	Unique value	Identifier which is set by seller (including Primary Provider) when posting a service for sale.
SELLER__CODE	SELLER	1(ALPHANUMERIC)6	Unique value	Organization name of Primary Provider or Reseller.
SELLER__COMMENTS	SELCOM	1(ALPHANUMERIC)80	Free form text	Informative text provided by the Seller.
SELLER__DUNS	SELDUNS	9(NUMERIC)9	Valid DUNS number	Unique Data Universal Numbering System provided by Dun and Bradstreet. Code for a Primary Provider or Seller.
SELLER__EMAIL	SELEMAIL	5(ALPHANUMERIC)60	Valid network reference	E-Mail address of Seller contact person.
SERVICE__INCREMENT	SRVINCR	1(ALPHANUMERIC)8	Valid increments • HOURLY • Daily • Weekly • Monthly • Yearly • {Registered}	The transmission service increments provided. Five are predefined, while additional increments can be used if they are registered on TSIN.COM and shown in the Provider's LIST template.
SELLER__FAX	SELFAX	14(ALPHANUMERIC)20	Area code and telephone number, plus any extensions Example: (aaa)-nnn-nnnn-xnnnn.	The fax telephone number for contact person at Seller.
SELLER__NAME	SELNAME	1(ALPHANUMERIC)25	Free form text	The name an individual contact person at the Seller.
SELLER__PHONE	SELPHONE	14(ALPHANUMERIC)25	Free form text	The telephone number of a contact person as a Seller.
SERVICE__DESCRIPTION	SVCDESC	1(ALPHANUMERIC)200	Free form text	Information regarding a service.
SERVICE__NAME	SVCNAME	1(ALPHANUMERIC)25	Free form text	Name of service affected by the discretionary action.
SERVICE__TYPE	SVCTYPE	1(ALPHANUMERIC)25	Free form text	Type of service affected by the discretionary action.

Data dictionary element name	Alias	Field format: minimum characters (type of ASCII) maximum characters	Restricted values	Definition of data element
SINK	SINK	0(ALPHANUMERIC)14	Valid area name	The area in which the SINK is located.
SOURCE	SOURCE	0(ALPHANUMERIC)14	Valid area name	The area in which the SOURCE is located.
SPARE__CODE	N/A	0(ALPHANUMERIC)3	Defined by region	Spare code to be used at a later time. Used by PATH__NAME.
STANDARDS__ OF__ CONDUCT__ISSUE.	STDISSUE	0(ALPHANUMERIC)200	Free form text	Issues that were in violation of the FERC Standards of Conduct.
START__TIME	STIME	16(ALPHANUMERIC)16	Valid date and time to seconds: yyyy+mo+dd+hh +mm+ss+tz	Start date and clock time of a service. When used as a query variable, it requires the return of all items whose Stop time is after the Start time. Note that for some Templates when used as a query variable the time may be only valid up to the hour, day or month. If more data is given than is valid, the hour, day or month will be used to make the date and time inclusive, i.e. date or time will be truncated to valid hour, day or month.
START__ TIME__ POSTED	STIMEP	16(ALPHANUMERIC)16	Valid Date and Time to seconds: xlyyyy+mo+dd+hh +mm+ss+tz	Query parameter to indicate all the records are to be retrieved that were posted on or after this time.
START__ TIME__ QUEUED	STIMEQ	16(ALPHANUMERIC)16	Valid Date and Time to seconds: yyyy+mo+dd+hh +mm+ss+tz	Start date and clock time of a service, used for requesting transactions queued after this time.
STATUS	STATUS	5(ALPHANUMERIC)25	Valid field (QUEUED, RECEIVED, STUDY, REBID, OFFER, ACCEPTED, REFUSED, CONFIRMED, WITHDRAWN, DISPLACED, ANNULLED, RETRACTED).	QUEUED=initial status assigned by TSIP on receipt of ''customer capacity purchase request''. RECEIVED=reassigned by TP to acknowledge QUEUED requests and indicate the service request is being evaluated. STUDY=assigned by TP to indicate some level of study is required or being performed to evaluate service request. OFFER=assigned by TP to indicate that an OFFER__PRICE is being proposed. REBID=assigned by TC to indicate a new BID__PRICE is being proposed. ACCEPTED=assigned by TP to indicate service request has been approved/accepted. If the reservation request was submitted PRECONFIRMED, OASIS shall immediately set the reservation status to CONFIRMED. Depending upon the type of ancillary services required, the Seller may or may not require all ancillary service reservations to be completed before accepting a request. REFUSED=assigned by TP to indicate service request has been denied, SELLER__COMMENTS should be used to communicate reason for denial of service.

Data dictionary element name	Alias	Field format: minimum characters (type of ASCII) maximum characters	Restricted values	Definition of data element
				CONFIRMED=assigned by TC in response to TP posting ''ACCEPTED'' status to confirm service. WITHDRAWN=assigned by TC at any point in request evaluation to withdraw the request from any further action. DISPLACED=assigned by TP when a ''CONFIRMED'' request from a TC is displayed by a longer term request and the TC has exercised right of first refusal (i.e. refused to match T&Cs of new request). ANNULLED=assigned by TP when, by mutual agreement with the TC, the transaction is to be voided. RETRACTED=assigned by TP when the TC fails to confirm or withdraw the transaction within the required time period.
STATUS__COMMENTS	STACOM	1(ALPHANUMERIC)80	Free form text	Informative text.
STATUS__NOTIFICATION	STATNOT	1(ALPHANUMERIC)200	http://URL:portnumber/directry/cgi script/query parameters or Mailto: <e-mail address.>.	The STATUS__NOTIFICATION data element shall contain the rptocol field ''http:'', which designates the notification method/protocol to be used, followed by all resource location information required; the target domain name and port designations shall be inserted into the notification URL based on the Customer's company registration information. The resource location information may include directory information, cgi script identifiers and URL encoded query string name/value pairs as required by the Customer's application, or mailto and email address for the status information the Customer wants to receive upon a change in STATUS of transstatus, or ancstatus.
STOP__TIME	SPTIME	16(ALPHANUMERIC)16	Valid date and time yyyy + mo + ddd + hh + mm + ss+tz.	Stop date and clock time. When used as a query variable, it requires the return of all items which start before the stop time. Note that for some Templates when used as a query variable the time may be only valid up to the hour, day or month. If more data is given than is valid, the hour, day or month will be used to make the date and time inclusive, i.e. date or time will be increased to include STOP__TIME.
STOP__TIME__POSTED	STPTIMEP	16(ALPHANUMERIC)16	Valid Date and Time to seconds: yyyy+mo+dd+hh+mm+ss+tz.	Query parameter to indicate all the records are to be retrieved that were posted on or before this time.
STOP__TIME__QUEUED	SPTIMEQ	16(ALPHANUMERIC)16	Valid Date and Time to seconds: yyyy+mo+dd+hh+mm+ss+tz.	Stop date and clock time, used for requesting transactions queued before this time.

Data dictionary element name	Alias	Field format: minimum characters (type of ASCII) maximum characters	Restricted values	Definition of data element
SUBJECT	SUBJ	1(ALPHANUMERIC)80	Free form text	Informative text used to summarize a topic in a message.
TARIFF__REFERENCE	TARIFF	1(ALPHANUMERIC)150	Free form text. Name and description of Tariff.	Tariffs approved by FERC.
TEMPLATE	TEMPL	1(ALPHANUMERIC)20	Valid Name of Template from Section 4.3 or from LIST Template.	The name of a logical collection of DATA__ELEMENTS in a User's interaction with an OASIS Node.
TIME__OF__LAST__UPDATE	TLUPDATE	16(ALPHANUMERIC)16	Valid Date and Time to seconds: yyyy+mo+dd+hh+mm+ss+tz.	Date and time to seconds that data was last updated. May be used to search data updated since a specific point in time.
TIME__POSTED	TIMEPST	16(ALPHANUMERIC)16	Valid Date and Time to seconds: yyyy+mo+dd+hh+mm+ss+tz.	Date and time a message is posted.
TIME__QUEUED	TIMEQ	16(ALPHANUMERIC)16	Valid Date and Time to seconds: yyyy+mo+dd+hh+mm+ss+tz.	Date and time that the request was queued.
TIME__STAMP	TSTAMP	16(ALPHANUMERIC)16	Valid Date and Time to seconds: yyyy+mo+dd+hh+mm+ss+tz.	Time data is created.
TS__CLASS	TSCLASS	1(ALPHANUMERIC)20	Valid classes: • FIRM • NON-FIRM • TTC • (Registered)	The transmission service classes provided. Three are pre-defined, while additional classes can be used if they are registered on TSIN.COM and shown in the Provider's LIST template page.
TS__PERIOD	TSPER	1(ALPHANUMERIC)20	Valid periods: ON__PEAK OFF__PEAK FULL__PERIOD (Registered)	The transmission service periods provided. Three are pre-defined, while additional periods can be used if they are registered on TSIN.COM and shown in the Provider's LIST template.

Data dictionary element name	Alias	Field format: minimum characters (type of ASCII) maximum characters	Restricted values	Definition of data element
TS__SUBCLASS	TSSUBC	1(ALPHANUMERIC)20	Free form	The transmission service subclasses provided. These are freeform.
TS__TYPE	TSTYPE	1(ALPHANUMERIC)20	Valid periods: • POINT__TO__POINT • NETWORK • (Registered)	The transmission service types provided. Two are pre-defined, while additional types can be used if they are registered on TSIN.COM and shown in the Provider's LIST template.
TS__WINDOW	TSWIND	1(ALPHANUMERIC)20	Valid periods: • FIXED • SLIDING • (Registered)	The transmission service windows provided. Two are predefined, while additional windows can be used if they are registered on TSIN.COM and shown in the Provider's LIST template.
TZ	TZ	2(ALPHANUMERIC)2	Valid time zone and indication whether daylight savings time is to be used.	Time zones: Atlantic time=AD, AS. Eastern time=ED, ES. Central time=CD, CS. Mountain time=MD, MS. Pacific time=PD, PS. Universal time=UT.
VALID__FROM__TIME	VALFTIME	16(ALPHANUMERIC)16	Valid Date and Time yyyy+mo+dd+hh+mm+ss+tz.	Date and time after which the message is valid.
VALID__TO__TIME	VALTTIME	16(ALPHANUMERIC)16	Valid date and time yyyy+mo+dd+hh+mm+ss+tz.	Date and time before which the message is valid.
VERSION	VER	1(REAL NUMBER)6	RANGE OF 1.0 TO 9999.9	Specifics which version of the OASIS Standards and Communication Protocol to use when interpreting the request.

[FR Doc. 98–17210 Filed 7–17–98; 8:45 am]
BILLING CODE 6717–01–M

federal register

Monday
July 20, 1998

Part III

Department of Education

34 CFR Part 685

William D. Ford Federal Direct Loan Program; Final Rule

DEPARTMENT OF EDUCATION

34 CFR Part 685

William D. Ford Federal Direct Loan Program

AGENCY: Office of Postsecondary Education, Department of Education.

ACTION: Final regulations.

SUMMARY: These regulations contain revised income percentage factors for the income contingent repayment plan, a repayment plan available in the William D. Ford Federal Direct Loan (Direct Loan) Program. The regulations also contain updated sample income contingent repayment amounts for single and married or head-of-household borrowers at various income and debt levels.

EFFECTIVE DATE: These regulations take effect on July 1, 1998.

FOR FURTHER INFORMATION CONTACT: Mr. Donald Watson, Management Analyst, Direct Loan Policy, Policy Development Division, U.S. Department of Education, Room 3045, ROB–3, 600 Independence Avenue, SW., Washington, DC 20202–5400. Telephone number: (202) 708–8242. Individuals who use a telecommunications device for the deaf (TDD) may call the Federal Information Relay Service (FIRS) at 1–800–877–8339, between 8 a.m. and 8 p.m., Eastern Time, Monday through Friday.

Individuals with disabilities may obtain this document in an alternate format (e.g., Braille, large print, audiotape, or computer diskette) on request to the contact person listed in the preceding paragraph.

SUPPLEMENTARY INFORMATION: The Direct Loan income contingent repayment plan regulations are amended to revise the four sources of information contained in Appendix A to 34 CFR Part 685, published on July 1, 1997 (62 FR 35602): examples of how the calculation of the monthly ICR repayment amount is performed, the income percentage factors, the constant multiplier chart, and charts showing sample repayment amounts.

The income percentage factors have been updated to reflect changes based on inflation. The revised income percentage factor table was developed by changing the dollar amounts of the incomes shown by a percentage equal to the estimated percentage change in the Consumer Price Index for all Urban Consumers from December 1997 to December 1998. Further, the examples of the calculations of the monthly repayment amounts and the two charts showing sample repayment amounts for single and married or head of household borrowers at various income and debt levels have been amended to reflect the updated income percentage factors.

The updated income percentage factors, at any given income, may cause a borrower's payments to be slightly lower than under the income percentage factors published in the July 1, 1997 regulations. These updated income percentage factors more accurately reflect a borrower's current ability to repay than those previously published because the revised factors are based on more recent economic data.

Waiver of Proposed Rulemaking

In accordance with the Administrative Procedure Act, 5 U.S.C. 553, it is customary for the Secretary to offer interested parties the opportunity to comment on proposed regulations. However, the changes in this document do not establish any new substantive rules, but simply update the income percentage factors used in the income contingent repayment plan, as required under 34 CFR 685.209(a)(8), and revise sample repayment information accordingly. Therefore, the Secretary has determined that publication of a notice of proposed rulemaking is unnecessary and contrary to the public interest under 5 U.S.C. 553(b)(B). For the same reasons, the Secretary waives the 30-day delayed effective date under 5 U.S.C. 553(d).

Paperwork Reduction Act of 1995

These regulations have been examined under the Paperwork Reduction Act of 1995 and have been found to contain no information collection requirements.

Regulatory Flexibility Act Certification

The Secretary certifies that these regulations will not have significant economic impact on a substantial number of small entities. The regulations will affect borrowers who are in repayment and will not affect institutions participating in the Direct Loan Program. The Regulatory Flexibility Act does not include individuals in its definition of ''small entities.'' Thus, the changes will not have a significant economic impact on any small entities under the Regulatory Flexibility Act.

Assessment of Educational Impact

The Secretary has determined that the regulations in this document would not require transmission of information that is being gathered by or is available from any other agency or authority of the United States.

Electronic Access to this Document

Anyone may view this document, as well as all other Department of Education documents published in the **Federal Register**, in the text or portable document format (pdf) on the World Wide Web at either of the following sites:

http://ocfo.ed.gov/fedreg.htm
http://www.ed.gov/news.html

To use the pdf you must have the Adobe Acrobat Reader Program with Search, which is available free at either of the previous sites. If you have questions about using the pdf, call the U.S. Government Printing Office at (202) 512–1530 or, toll free, at 1–888–293–6498.

Anyone may also view these documents in text copy only on an electronic bulletin board of the Department. Telephone: (202) 219–1511 or, toll free, 1–800–222–4922. The documents are located under Option G—Files/Announcements, Bulletins and Press Releases.

Note: The official version of this document is the document published in the **Federal Register**.

List of Subjects in 34 CFR Part 685

Administrative practice and procedure, Colleges and universities, Education, Loan programs-education, Reporting and recordkeeping requirements, Student aid, Vocational education.

Dated: July 13, 1998.

Richard W. Riley,

Secretary of Education.

(Catalog of Federal Domestic Assistance Number 84.268 William D. Ford Federal Direct Loan Program)

The Secretary amends Part 685 of title 34 of the Code of Federal Regulations as follows:

PART 685—WILLIAM D. FORD FEDERAL DIRECT LOAN PROGRAM

1. The authority citation for Part 685 continues to read as follows:

Authority: 20 U.S.C. 1087a *et seq.*, unless otherwise noted.

2. Appendix A to part 685 is revised to read as follows:

Appendix A to part 685—Income Contingent Repayment

Examples of the Calculations of Monthly Repayment Amounts

Example 1. A single borrower with $15,000 of Direct Loans, 8.25 percent interest rate, and an adjusted gross income (AGI) of $23,356.

Step 1: Determine annual payments based on what the borrower would pay over 12

years using standard amortization. To do this, multiply the principal balance by the constant multiplier for 8.25 percent interest (0.1315452). The constant multiplier is a factor used to calculate amortized payments at a given interest rate over a fixed period of time. (See the constant multiplier chart below to determine the constant multiplier you should use for the interest rate on the loan. If the exact interest rate is not listed, use the next highest for estimation purposes.)

- 0.1315452 × $15,000 = $1,973.18

Step 2: Multiply the result by the income percentage factor shown in the income percentage factor table that corresponds to the borrower's income (if the income is not listed, you can calculate the applicable income percentage factor by following the instructions under the interpolation heading below):

- 80.33% (0.8033) × $1,973.18 = $1,585.06

Step 3: Determine 20 percent of discretionary income. For a single borrower, subtract the poverty level for a family of one, as published in the **Federal Register** on February 24, 1998 (63 FR 9235), from the borrower's income and multiply the result by 20%:

- $23,356 – $8,050 = $15,306
- $15,306 × 0.20 = $3,061.20

Step 4: Compare the amount from step 2 with the amount from step 3. The lower of the two will be the borrower's annual payment amount. This borrower will be paying the amount calculated under step 2. To determine the monthly repayment amount, divide the annual amount by 12.

- $1,585.05 ÷ 12 = $132.09

Example 2. Married borrowers repaying jointly under the income contingent repayment plan with a combined AGI of $29,337. The husband has a Direct Loan balance of $10,000, and the wife has a Direct Loan balance of $15,000. The interest rate is 8.25 percent. This couple has no children.

Step 1: Add the Direct Loan balances of the husband and wife together to determine the aggregate loan balance.

- $10,000 + $15,000 = $25,000

Step 2: Determine the annual payment based on what the couple would pay over 12 years using standard amortization. To do this, multiply the aggregate principal balance by the constant multiplier for 8.25 percent interest (0.1315452). (See the constant multiplier chart to determine the constant multiplier you should use for the interest rate on the loan. If the exact interest rate is not listed, choose the next highest rate for estimation purposes.)

- 0.1315452 × $25,000 = $3,288.63

Step 3: Multiply the result by the income percentage factor shown in the income percentage factor table that corresponds to the couple's income (if the income is not listed, you can calculate the applicable income percentage factor by following the instructions under the interpolation heading below):

- 87.61% (0.8761) × $3,288.63 = $2881.17

Step 4: Determine 20 percent of the couple's discretionary income. To do this, subtract the poverty level for a family of 2, as published in the **Federal Register** on February 24, 1998 (63 FR 9235), from the couple's income and multiply the result by 20 percent:

- $29,337–$10,850 = $18,487
- $18,487 × 0.20 = $3,397.40

Step 5: Compare the amount from step 3 with the amount from step 4. The lower of the two will be the annual payment amount. The married borrowers will be paying the amount calculated under step 3. To determine the monthly repayment amount, divide the annual amount by 12.

- $2,881.17 ÷ 12 = $240.10

Interpolation: If your income does not appear on the income percentage factor table, you will have to calculate the income percentage factor through interpolation. For example, assume you are single and your income is $30,000.

Step 1: To interpolate, you must first find the interval between the closest income listed that is less than $30,000 and the closest income listed that is greater than $30,000. Afterwards, you must subtract these numbers (for this discussion, we will call the result ''the income interval''):

- $36,793–$29,337 = $7,456

Step 2: Next, find the interval between the two income percentage factors that are given for these incomes (for this discussion, we will call the result, the ''income percentage factor interval''):

- 100.00%–88.77 = 11.23%

Step 3: Subtract the income shown on the chart that is immediately less than $30,000 from $30,000:

- $30,000–$29,337 = $663

Step 4: Divide the result by the number representing the income interval:

- $663 ÷ $7,456 = 0.0889

Step 5: Multiply the result by the income percentage factor interval:

- 0.0889 × 11.23 = 0.9983

Step 6: Add the result to the lower income percentage factor used to calculate the income percentage factor interval for $30,000 in income:

- .9983% + 88.77% = 89.77%

The result is the income percentage factor that will be used to calculate the monthly repayment amount under the income contingent repayment plan.

INCOME PERCENTAGE FACTORS

[Based on annual income]

Single		Married/head of household	
Income	Percent factor	Income	Percent factor
7,669	55.00	7,669	50.52
10,552 ...	57.79	12,101	56.68
13,578 ...	60.57	14,422	59.56
16,673 ...	66.23	18,853	67.79
19,629 ...	71.89	23,356	75.22
23,356 ...	80.33	29,337	87.61
29,337 ...	88.77	36,793	100.00
36,793 ...	100.00	44,251	100.00
44,251 ...	100.00	55,438	109.40
53,185 ...	111.80	74,080	125.00
68,101 ...	123.50	100,180	140.60
96,452 ...	141.20	140,106	150.00
110,592	150.00	228,943	200.00
196,984	200.00		

CONSTANT MULTIPLIER CHART FOR 12-YEAR AMORTIZATION

Interest rate (percent)	Annual constant multiplier
7.00	0.123406
7.25	0.125011
7.46	0.126368
7.50	0.126627
7.75	0.128255
8.00	0.129894
8.25	0.131545
8.38	0.132408
8.50	0.133207
8.75	0.134880
9.00	0.136564

BILLING CODE 4000–01–P

Sample First-Year Monthly Repayment Amounts for a Single Borrower at various Income and Debt Levels

	Initial Debt																							
Income	$ 2,500	$ 5,000	$ 7,500	$ 10,000	$ 12,500	$ 15,000	$ 17,500	$ 20,000	$ 22,500	$ 25,000	$ 30,000	$ 35,000	$ 40,000	$ 45,000	$ 50,000	$ 55,000	$ 60,000	$ 65,000	$ 70,000	$ 75,000	$ 80,000	$ 85,000	$ 90,000	$ 100,000
$ 1,000	0	0	0	0	0	0	0	0	0	0	0	0	0	0	0	0	0	0	0	0	0	0	0	0
2,000	0	0	0	0	0	0	0	0	0	0	0	0	0	0	0	0	0	0	0	0	0	0	0	0
3,000	0	0	0	0	0	0	0	0	0	0	0	0	0	0	0	0	0	0	0	0	0	0	0	0
4,000	0	0	0	0	0	0	0	0	0	0	0	0	0	0	0	0	0	0	0	0	0	0	0	0
5,000	0	0	0	0	0	0	0	0	0	0	0	0	0	0	0	0	0	0	0	0	0	0	0	0
6,000	0	0	0	0	0	0	0	0	0	0	0	0	0	0	0	0	0	0	0	0	0	0	0	0
7,000	0	0	0	0	0	0	0	0	0	0	0	0	0	0	0	0	0	0	0	0	0	0	0	0
8,000	0	0	0	0	0	0	0	0	0	0	0	0	0	0	0	0	0	0	0	0	0	0	0	0
9,000	15	16	16	16	16	16	16	16	16	16	16	16	16	16	16	16	16	16	16	16	16	16	16	16
10,000	16	31	33	33	33	33	33	33	33	33	33	33	33	33	33	33	33	33	33	33	33	33	33	33
12,500	16	33	49	65	74	74	74	74	74	74	74	74	74	74	74	74	74	74	74	74	74	74	74	74
15,000	17	35	52	69	87	104	116	116	116	116	116	116	116	116	116	116	116	116	116	116	116	116	116	116
17,500	19	37	56	74	93	112	130	147	156	158	158	158	158	158	158	158	158	158	158	158	158	158	158	158
20,000	20	40	60	80	100	120	140	159	179	199	199	199	199	199	199	199	199	199	199	199	199	199	199	199
22,500	21	43	64	86	107	129	150	172	193	215	241	241	241	241	241	241	241	241	241	241	241	241	241	241
25,000	23	45	68	91	113	136	159	181	204	227	272	283	283	283	283	283	283	283	283	283	283	283	283	283
30,000	25	49	74	98	123	148	172	197	221	246	295	344	366	366	366	366	366	366	366	366	366	366	366	366
35,000	27	53	80	107	133	160	187	213	240	267	320	373	426	449	449	449	449	449	449	449	449	449	449	449
40,000	27	55	82	110	137	164	192	219	247	274	329	384	438	493	533	533	533	533	533	533	533	533	533	533
45,000	28	55	83	111	138	166	194	221	249	278	332	387	443	498	554	609	616	616	616	616	616	616	616	616
50,000	29	59	88	118	147	177	206	236	265	295	354	413	472	531	590	649	699	699	699	699	699	699	699	699
55,000	31	62	93	124	155	186	219	248	279	310	372	434	496	559	621	683	745	783	783	783	783	783	783	783
60,000	32	64	96	128	161	193	225	257	289	321	385	449	514	578	642	706	771	835	866	866	866	866	866	866
65,000	33	66	100	133	166	199	232	265	299	332	398	465	531	597	664	730	796	863	929	949	949	949	949	949
70,000	34	68	103	137	171	205	239	273	308	342	410	478	547	615	683	752	820	888	957	1025	1033	1033	1033	1033
75,000	35	70	105	140	175	210	245	280	315	350	420	490	560	630	701	771	841	911	981	1051	1116	1116	1116	1116
80,000	36	72	108	144	179	215	251	287	323	359	431	502	574	646	718	789	861	933	1005	1076	1148	1199	1199	1199
85,000	37	73	110	147	184	220	257	294	331	367	441	514	588	661	735	808	882	955	1029	1102	1176	1283	1283	1283
90,000	38	75	113	150	188	226	263	301	338	376	451	526	601	677	752	827	902	977	1053	1128	1203	1278	1353	1366
95,000	38	77	115	154	192	231	269	308	346	384	461	538	615	692	769	846	923	1000	1077	1153	1230	1307	1384	1449
100,000	39	79	118	157	197	236	275	314	355	393	472	550	629	707	786	865	943	1022	1100	1179	1258	1336	1415	1533

Sample repayment amounts are based on an interest rate of 8.25%.

Sample First-Year Monthly Repayment Amounts for a Married or Head-of-household Borrower at various Income and Debt Levels

	Family Size = 3																							
	Initial Debt																							
Income	$ 2,500	$ 5,000	$ 7,500	$ 10,000	$ 12,500	$ 15,000	$ 17,500	$ 20,000	$ 22,500	$ 25,000	$ 30,000	$ 35,000	$ 40,000	$ 45,000	$ 50,000	$ 55,000	$ 60,000	$ 65,000	$ 70,000	$ 75,000	$ 80,000	$ 85,000	$ 90,000	$ 100,000
$ 1,000	0	0	0	0	0	0	0	0	0	0	0	0	0	0	0	0	0	0	0	0	0	0	0	0
2,000	0	0	0	0	0	0	0	0	0	0	0	0	0	0	0	0	0	0	0	0	0	0	0	0
3,000	0	0	0	0	0	0	0	0	0	0	0	0	0	0	0	0	0	0	0	0	0	0	0	0
4,000	0	0	0	0	0	0	0	0	0	0	0	0	0	0	0	0	0	0	0	0	0	0	0	0
5,000	0	0	0	0	0	0	0	0	0	0	0	0	0	0	0	0	0	0	0	0	0	0	0	0
6,000	0	0	0	0	0	0	0	0	0	0	0	0	0	0	0	0	0	0	0	0	0	0	0	0
7,000	0	0	0	0	0	0	0	0	0	0	0	0	0	0	0	0	0	0	0	0	0	0	0	0
8,000	0	0	0	0	0	0	0	0	0	0	0	0	0	0	0	0	0	0	0	0	0	0	0	0
9,000	0	0	0	0	0	0	0	0	0	0	0	0	0	0	0	0	0	0	0	0	0	0	0	0
10,000	0	0	0	0	0	0	0	0	0	0	0	0	0	0	0	0	0	0	0	0	0	0	0	0
12,500	0	0	0	0	0	0	0	0	0	0	0	0	0	0	0	0	0	0	0	0	0	0	0	0
15,000	17	23	23	23	23	23	23	23	23	23	23	23	23	23	23	23	23	23	23	23	23	23	23	23
17,500	18	36	54	64	64	64	64	64	64	64	64	64	64	64	64	64	64	64	64	64	64	64	64	64
20,000	19	38	57	76	95	106	106	106	106	106	106	106	106	106	106	106	106	106	106	106	106	106	106	106
22,500	20	40	61	81	101	121	142	148	148	148	148	148	148	148	148	148	148	148	148	148	148	148	148	148
25,000	22	43	65	86	108	129	151	172	189	189	189	189	189	189	189	189	189	189	189	189	189	189	189	189
30,000	24	49	73	97	122	146	170	194	219	249	273	273	273	273	273	273	273	273	273	273	273	273	273	273
35,000	27	53	80	106	133	160	186	213	239	266	319	356	356	356	356	356	356	356	356	356	356	356	356	356
40,000	27	55	82	110	137	164	192	219	247	274	329	384	438	439	439	439	439	439	439	439	439	439	439	439
45,000	28	55	83	110	138	165	193	221	248	276	331	386	441	496	523	523	523	523	523	523	523	523	523	523
50,000	29	57	86	115	144	172	201	230	259	287	345	402	460	517	575	606	606	606	606	606	606	606	606	606
55,000	30	60	90	120	149	179	209	239	269	299	359	418	478	538	598	657	689	689	689	689	689	689	689	689
60,000	31	62	93	124	155	186	217	248	279	310	372	434	496	559	621	683	745	773	773	773	773	773	773	773
65,000	32	64	97	129	161	193	225	257	290	322	386	450	515	579	643	708	772	837	856	856	856	856	856	856
70,000	33	67	100	133	167	200	233	267	300	333	400	466	533	600	666	733	800	866	933	939	939	939	939	939
75,000	34	69	103	138	172	206	241	275	310	344	413	482	551	619	688	757	826	895	963	1023	1023	1023	1023	1023
80,000	35	70	106	141	176	211	247	282	317	352	423	493	564	634	705	775	845	916	986	1057	1106	1106	1106	1106
85,000	36	72	108	144	180	216	252	288	324	360	433	505	577	649	721	793	865	937	1009	1081	1153	1189	1189	1189
90,000	37	74	111	148	184	221	258	295	332	369	442	516	590	664	737	811	885	958	1032	1106	1180	1253	1273	1273
95,000	38	75	113	151	188	226	264	301	339	377	452	528	603	678	754	829	904	980	1055	1131	1206	1356	1356	1356
100,000	39	77	116	154	193	231	270	308	347	385	462	539	616	693	770	847	924	1001	1078	1155	1232	1309	1386	1439

Sample repayment amounts are based on an interest rate of 8.25%.

[FR Doc. 98–19158 Filed 7–17–98; 8:45 am]

BILLING CODE 4000–01–C

Reader Aids

Federal Register

Vol. 63, No. 138

Monday, July 20, 1998

CUSTOMER SERVICE AND INFORMATION

Federal Register/Code of Federal Regulations

General Information, indexes and other finding aids	**202–523–5227**
Laws	**523–5227**
Presidential Documents	
Executive orders and proclamations	**523–5227**
The United States Government Manual	**523–5227**
Other Services	
Electronic and on-line services (voice)	**523–4534**
Privacy Act Compilation	**523–3187**
Public Laws Update Service (numbers, dates, etc.)	**523–6641**
TTY for the deaf-and-hard-of-hearing	**523–5229**

ELECTRONIC RESEARCH

World Wide Web

Full text of the daily Federal Register, CFR and other publications:

http://www.access.gpo.gov/nara

Federal Register information and research tools, including Public Inspection List, indexes, and links to GPO Access:

http://www.nara.gov/fedreg

E-mail

PENS (Public Law Electronic Notification Service) is an E-mail service that delivers information about recently enacted Public Laws. To subscribe, send E-mail to

listproc@lucky.fed.gov

with the text message:

subscribe publaws-l <firstname> <lastname>

Use listproc@lucky.fed.gov only to subscribe or unsubscribe to PENS. We cannot respond to specific inquiries at that address.

Reference questions. Send questions and comments about the Federal Register system to:

info@fedreg.nara.gov

The Federal Register staff cannot interpret specific documents or regulations.

FEDERAL REGISTER PAGES AND DATES, JULY

35787–36150 1
36151–36338 2
36339–36540 6
36541–36830 7
36831–37058 8
37059–37242 9
37243–37474 10
37475–37754 13
37755–38072 14
38073–38276 15
38277–38460 16
38461–38736 17
38737–39014 20

CFR PARTS AFFECTED DURING JULY

At the end of each month, the Office of the Federal Register publishes separately a List of CFR Sections Affected (LSA), which lists parts and sections affected by documents published since the revision date of each title.

3 CFR

Proclamations:
7107 36531
7108 38073
Executive Orders:
9981 (See Proclamation 7108) 38073
11958 (Amended by EO 13091) 36153
12163 (Amended by EO 13091) 36153
13090 36151
13091 36153
Administrative Orders:
Presidential Orders:
No. 98–31 36149
Memorandums:
July 8, 1998 38277

5 CFR

Proposed Rules:
2420 35882
2421 35882
2422 35882
2423 35882
2470 35882
2472 35882

7 CFR

2 35787
272 37755
275 37755
301 .....36155, 38279
457 .....36156, 36157
911 37475
915 37475
931 38280
948 38282
1361 37755
1371 37755
1773 38719
1980 36157
Proposed Rules:
246 38343
905 38347
457 38761
924 38349
958 36194
1753 38503
1755 36377

8 CFR

3 36992

9 CFR

3 37480
78 37243
93 37483

10 CFR

34 37059
430 38737
Proposed Rules:
20 38511

11 CFR

Proposed Rules:
102 37721
103 37721
106 37721

12 CFR

208 37630
209 37659
216 37665
250 37630
360 37760
560 38461
611 36541
614 36541
620 36541
630 36541
904 37483
Proposed Rules:
330 38521

13 CFR

121 38742

14 CFR

25 38075
39 .....35787, 35790, 35792, 35793, 35794, 35796, 36158, 36549, 36551, 36553, 36831, 36832, 36834, 36835, 36836, 37061, 37063, 37761, 37763, 37765, 38284, 38286, 38287, 38289, 38290, 38293, 38295, 38463, 38464, 38742
71 .....36161, 36554, 36838, 36839, 36840, 36841, 36843, 36844, 36845, 37065, 37489, 37943, 38077, 38079, 38080, 38466
95 37243
97 .....36162, 36165, 36170, 38467, 38468, 38470
Proposed Rules:
27 37745
29 37745
39 .....35884, 36377, 36619, 36621, 36622, 36624, 36626, 36628, 36630, 36864, 37072, 37074, 37078, 37080, 37083, 37508, 37793, 37795, 38116, 38118, 38120, 38122, 38123, 38126, 38351, 38353, 38524
65 .....37171, 37210
66 .....37171, 37210
71 .....37510, 38524
91 38235
93 38231
147 37171
234 38128

241 38128
250 38128
298 38128
374a 38128

15 CFR

280 37170
740 37767
746 37767
774 37767
902 ....37246, 38298
922 36339

16 CFR

0 36339
1 36339
3 36339
4 38472
303 36171
304 36555
305 38743
432 37233
Proposed Rules:
432 37237

17 CFR

240 ....37667, 37688
Proposed Rules:
1 38525
5 38537
210 35886
17 38525
18 38525
150 38525
229 35886
230 36136
240 ....35886, 36138, 37746
249 35886
275 36632
279 36632

18 CFR

37 38883

19 CFR

162 ....35798, 36992
178 ....35798, 36992
Proposed Rules:
4 036379

20 CFR

404 36560
416 36560

21 CFR

101 37029
172 ....36344, 36362
173 38746
175 37246
177 36175
178 ....35798, 36176, 36177, 38747
510 36178
520 ....36178, 38473, 38474
522 ....38303, 38749
529 38304
556 ....38303, 38749
558 ....36179, 38474, 38750
Proposed Rules:
120 37057
341 38762
812 38131

22 CFR

40 36365
41 36365
140 36571
228 38751

25 CFR

Proposed Rules:
61 36866

26 CFR

1 36180
48 35799
145 35799
602 35799
648 36180
Proposed Rules:
1 ....37296, 38139
48 35893
301 37296

27 CFR

178 37739

28 CFR

0 36846
16 36295
Proposed Rules:
23 38765

29 CFR

4011 38305
4022 38305
4041A 38305
4044 ....38082, 38305
4050 38305
4281 38305

30 CFR

250 37066
901 35805
918 38881
948 37774
Proposed Rules:
72 37796
75 ....37796, 38065
206 ....36868, 38355
944 36868

31 CFR

103 37777
317 38035
321 38035
330 38035
357 35807
359 38035
360 38035
501 35808
515 35808
538 35809
560 35808
Proposed Rules:
103 37085

32 CFR

204 36992
588 37068
Proposed Rules:
199 36651
655 37296

33 CFR

Ch. I 36384
100 ....36181, 36182, 36183, 36849, 36850, 37249, 37490, 37491, 38308, 38752
117 ....35820, 37250, 37251
155 35822
165 ....36851, 37492, 38307, 38476, 38753
401 36992
402 36992
Proposed Rules:
100 36197
110 37297

34 CFR

74 36144
80 36144
685 39009
Proposed Rules:
304 37465
668 37713

36 CFR

327 35826
1220 35828
1222 35828
1228 35828
1230 35828
1234 35828
1238 35828

37 CFR

1 36184

38 CFR

4 37778
17 37779
21 35830
Proposed Rules:
17 37299

39 CFR

20 ....37251, 38478
111 ....37254, 37945, 38083, 38309

40 CFR

52 ....35837, 35839, 35842, 36578, 36578, 36852, 36854, 37255, 37493, 38087, 38755
62 36858
63 38478
81 37258
136 38756
180 ....35844, 36366, 37280, 37286, 37289, 38481,38483, 38495
261 37780
271 36587
279 37780
282 38498
300 ....36861, 37069, 37782
Proposed Rules:
52 ....35895, 35896, 36652, 36870, 37307, 38139
62 36871
63 38544
86 38767
131 36742
136 36810
141 37797
142 37797
180 37307
261 ....37797, 38139
264 37309
265 37309
271 36652
281 37311
300 37085

41 CFR

101–20 35846

42 CFR

121 35847
409 37498
410 37498
411 37498
413 37498
422 36488
424 37498
483 37498
489 37498
1008 38311

44 CFR

64 37783
65 ....37784, 38326
67 37786
Proposed Rules:
67 37808

45 CFR

303 36185

46 CFR

401 37943
402 37943
Proposed Rules:
28 38141
502 35896
503 35896
510 35896
514 ....35896, 37088
540 35896
572 35896
585 35896
587 35896
588 35896

47 CFR

0 37499
1 ....35847, 36591, 38881
2 36591
5 36591
15 36591
18 36591
21 36591
22 36591
24 36591
26 36591
63 37499
64 ....36191, 37069
73 ....36191, 36192, 36591, 38357, 38756, 38757
74 ....36591, 38357
76 ....37790, 38089
78 36591
80 36591
87 36591
90 36591
95 36591
97 36591
101 36591
Proposed Rules:
1 38142
2 35901
69 38774
73 ....36199, 36387, 37090, 38784, 38785, 38786, 38787
76 ....37812, 37815

48 CFR

Ch. 1 36128
1 36120
12 36120
15 36120
19 36120

52.....36120
53.....36120
235.....36862
532.....38330
552.....38330

Proposed Rules:

13.....36522
16.....36522,
32.....36522
52.....36522
1609.....38360
1632.....38360
1652.....38360

49 CFR

7.....38331
171.....37453
172.....37453
173.....37453
175.....37453
177.....37453
178.....37453
180.....37453
190.....38757, 38758
191.....37500, 38757
192 .....37500, 38757, 38758
193.....37500, 38757
194.....37500
195 .....36373, 37500, 38757
199.....36862, 38757
223.....36376
541.....38096

Proposed Rules:

171.....38455
177.....38455
178.....38455
180.....38455
385.....38788
395.....38791
396.....38791
571 .....37820, 38795, 38797, 38799, 38802

50 CFR

285 .....36611, 37506, 38340
600.....36612
622 .....37070, 37246, 38298
660 .....36612, 36614, 38101
679 .....36193, 36863, 37071, 37507, 38340, 38341, 38342, 38501, 38758, 388759, 38760

Proposed Rules:

14.....38143
17.....36993, 38803
20.....38699
660.....38144

REMINDERS

The items in this list were editorially compiled as an aid to Federal Register users. Inclusion or exclusion from this list has no legal significance.

RULES GOING INTO EFFECT JULY 18, 1998

TRANSPORTATION DEPARTMENT

Federal Aviation Administration

Airworthiness directives:
- AERMACCHI S.p.A.; published 6-8-98
- Industrie Aeronautiche e Meccaniche Rinaldo Piaggio S.p.A.; published 6-8-98¶

RULES GOING INTO EFFECT JULY 20, 1998

ENVIRONMENTAL PROTECTION AGENCY

Air programs; approval and promulgation; State plans for designated facilitiesand pollutants:
- Georgia; published 5-19-98

Air quality implementation plans; approval and promulgation; various States:
- Illinois; published 5-19-98
- Michigan; published 5-19-98

Reporting and recordkeeping requirements; published 6-18-98

FEDERAL COMMUNICATIONS COMMISSION

Radio stations; table of assignments:
- Florida et al.; published 7-20-98

FEDERAL TRADE COMMISSION

Appliances, consumer; energy consumption and water use information in labeling and advertising:
- Lamp product distribution without individual packaging or labeling; disclosure of labeling on bulk shipping cartons; published 7-20-98

HEALTH AND HUMAN SERVICES DEPARTMENT

Food and Drug Administration

Animal drugs, feeds, and related products:
- Bacitracin methylene disalicylate; published 7-20-98
- Flunixin meglumine; published 7-20-98

Food additives:
- Adjuvant, production aids, and sanitizers—
  - Aluminum borate; published 7-20-98

Food for human consumption:
- Chlorine dioxide; published 7-20-98

LEGAL SERVICES CORPORATION

Case information disclosure; published 6-18-98

LIBRARY OF CONGRESS

Copyright Office, Library of Congress

Sound recordings, publicly performed, of nonexempt subscription digital transmissions; notice and recordkeeping; published 6-24-98

NATIONAL AERONAUTICS AND SPACE ADMINISTRATION

Acquisition regulations:
- Contractor performance; published 5-21-98

SMALL BUSINESS ADMINISTRATION

Small business size standards:
- Nonmanufacturer rule; waivers—
  - Towers, telegraph apparatus, turbines, cellular handsets and telephones, automobile motor vehicles, motor trucks, and radiotelephones; published 7-20-98

SOCIAL SECURITY ADMINISTRATION

Supplemental security income:
- Aged, blind, and disabled—
  - Valuation of in-kind support and maintenance with cost-of-living adjustment; published 6-19-98

TRANSPORTATION DEPARTMENT

Coast Guard

Uniform State Waterways Marking System and U.S. Aids to Navigation System and U.S. Aids to Navigation System; merger; published 6-19-98

TRANSPORTATION DEPARTMENT

Federal Aviation Administration

Airworthiness directives:
- Aerospatiale; published 6-15-98
- Airbus; published 6-15-98
- Cessna; published 6-26-98
- CFM International; published 6-19-98
- Construcciones Aeronauticas, S.A.; published 6-15-98
- Fokker; published 6-15-98

TRANSPORTATION DEPARTMENT

Federal Highway Administration

Motor carrier safety standards:
- Federal regulatory review; published 6-18-98

TRANSPORTATION DEPARTMENT

Research and Special Programs Administration

Pipeline safety:
- Voluntary specifications and standards, etc.; periodic updates
  - Correction; published 7-20-98
  - Effective date confirmation and removal of amendment; published 7-20-98

TREASURY DEPARTMENT

Internal Revenue Service

Income taxes:
- Transfers of stock on securities by U.S. persons to foreign corporations and related reporting requirements; published 6-19-98

VETERANS AFFAIRS DEPARTMENT

Board of Veterans Appeals:
- Appeals regulations and rules of practice—
  - Continuation of representation following claimant's or appellant's death; published 6-19-98

COMMENTS DUE NEXT WEEK

AGRICULTURE DEPARTMENT

Agricultural Marketing Service

Fruits and vegetables, processed:
- Inspection and certification; comments due by 7-30-98; published 6-30-98

Papayas grown in—
- Hawaii; comments due by 7-29-98; published 6-29-98

AGRICULTURE DEPARTMENT

Animal and Plant Health Inspection Service

Plant-related quarantine, foreign:
- Rhododendron established in growing media; importation; comments due by 7-30-98; published 6-1-98

AGRICULTURE DEPARTMENT

Farm Service Agency

Warehouses:
- Cotton warehouses; ''without unnecessary delay'' defined; comments due by 7-27-98; published 5-26-98

AGRICULTURE DEPARTMENT

Grain Inspection, Packers and Stockyards Administration

Grain inspection equipment performance requirements:
- Corn, oil, protein and starch; near-infrared spectroscopy (NIRS) analyzers; comments due by 7-30-98; published 6-30-98

ARCHITECTURAL AND TRANSPORTATION BARRIERS COMPLIANCE BOARD

Americans with Disabilities Act; implementation:
- Accessibility guidelines—
  - Acoustical performance of school classrooms and other buildings and facilities; rulemaking petition and request for information; comments due by 7-31-98; published 6-1-98
  - Play areas; comments due by 7-29-98; published 4-30-98

COMMERCE DEPARTMENT

National Oceanic and Atmospheric Administration

International fisheries regulations:
- High Seas Fishing Compliance Act; vessel identification and reporting requirements; comments due by 7-27-98; published 6-25-98

COMMERCE DEPARTMENT

Patent and Trademark Office

Patent cases:
- Patent Cooperation Treaty application procedures; comments due by 7-31-98; published 6-1-98

EDUCATION DEPARTMENT

Special education and rehabilitative services:
- Individuals with Disabilities Education Act Amendments of 1997; implementation—
  - Infants and toddlers with disabilities early

intervention program; advice and recommendations request; comments due by 7-31-98; published 4-14-98

ENERGY DEPARTMENT

Energy Efficiency and Renewable Energy Office

Energy conservation:
Commercial and industrial equipment, energy efficiency program—
Electric motors; test procedures, labeling, and certification requirements; comments due by 7-27-98; published 6-25-98

ENVIRONMENTAL PROTECTION AGENCY

Air programs; approval and promulgation; State plans for designated facilities and pollutants:
Oregon; comments due by 7-27-98; published 6-26-98
Air quality implementation plans; approval and promulgation; various States:
Illinois; comments due by 7-31-98; published 7-1-98
Indiana; comments due by 7-29-98; published 6-29-98
Iowa; comments due by 7-27-98; published 6-25-98
Pennsylvania; comments due by 7-29-98; published 6-29-98
Texas; comments due by 7-31-98; published 7-1-98
Water programs:
Pollutants analysis test procedures; guidelines—
Mercury; measurement method; comments due by 7-27-98; published 5-26-98

FEDERAL COMMUNICATIONS COMMISSION

Common carrier services:
Mutual Recognition Agreements implementation and Global Mobile Personal Communication for satellite terminals; equipment authorization process streamlining; comments due by 7-27-98; published 6-10-98
Conducted emission limits; inquiry; comments due by 7-27-98; published 6-25-98
Frequency allocations and radio treaty matters:
Radio frequency devices capable of causing harmful interference; importation; comments due by 7-31-98; published 7-1-98

FEDERAL LABOR RELATIONS AUTHORITY

Presidenial and Executive Office Accountability Act; implementation:
Issues that have arisen as agency carries out its responsibilities; regulatory review; comments due by 7-31-98; published 7-1-98

FEDERAL MARITIME COMMISSION

Independent Offices Appropriations Act; implementation:
User fees for services and benefits; existing fees updated and new filing and and service fees added; comments due by 7-31-98; published 7-1-98

FEDERAL TRADE COMMISSION

Hart-Scott-Rodino Antitrust Improvement Act:
Premerger notification; reporting and waiting period requirements; comments due by 7-27-98; published 6-25-98
Trade regulation rules:
Textile wearing apparel and piece goods; care labeling; comments due by 7-27-98; published 5-8-98

HEALTH AND HUMAN SERVICES DEPARTMENT

Food and Drug Administration

Administrative practice and procedure:
Drugs composed wholly or partly of insulin; certification regulations removed; comments due by 7-27-98; published 5-13-98
Food additives:
Adjuvants, production aids, and sanitizers—
1,6-hexanediamine, N,N'-bis(2,2,6,6-tetramethyl-4-piperidinyl)-, polymers wit h morpholine-2,4,6-trichloro-1,3,5-triazine reaction products; comments due by 7-29-98; published 6-29-98
Cetylmethyl, dimethyl, methyl 11-methoxy-11-oxoundecyl; comments due by 7-31-98; published 7-1-98
Food for human consumption:
Beverages—
Bottled water; chemical contaminants; quality standards; comments due by 7-27-98; published 5-11-98
Bottled water; chemical contaminants; quality standards; comments due by 7-27-98; published 5-11-98
Bottled water; chemical contaminants; quality standards; correction; comments due by 7-27-98; published 6-5-98
Human drugs:
Antibiotic drugs certification; CFR parts removed; comments due by 7-27-98; published 5-12-98
Antibiotic drugs certification; removal of regulations; comments due by 7-27-98; published 5-12-98
Medical devices:
Adverse events reporting by manufacturers, importers, distributors, and health care user facilities; comments due by 7-27-98; published 5-12-98

HOUSING AND URBAN DEVELOPMENT DEPARTMENT

Housing programs:
Uniform financial reporting standards; comments due by 7-30-98; published 6-30-98
Uniform physical condition standards and physical inspection requirements; comments due by 7-30-98; published 6-30-98
Mortgage and loan insurance programs:
Single family mortgage insurance—
Electronic underwriting; comments due by 7-28-98; published 5-29-98
Public and Indian housing:
Public housing assessment system; comments due by 7-30-98; published 6-30-98

INTERIOR DEPARTMENT

Fish and Wildlife Service

Endangered and threatened species:
Chiricahua or Blumer's dock; comments due by 7-30-98; published 4-1-98
Devils River minnow; comments due by 7-27-98; published 3-27-98
Migratory bird hunting:
Early-season regulations (1998-1999); proposed frameworks; comments due by 7-31-98; published 7-17-98

INTERIOR DEPARTMENT

Surface Mining Reclamation and Enforcement Office

Abandoned mine land reclamation:
Government-financed construction; definition revision; comments due by 7-27-98; published 6-25-98

NUCLEAR REGULATORY COMMISSION

Rulemaking petitions:
International Energy Consultants, Inc.; comments due by 7-31-98; published 6-24-98

PERSONNEL MANAGEMENT OFFICE

Hazardous duty pay; comments due by 7-30-98; published 6-30-98

SECURITIES AND EXCHANGE COMMISSION

Securities:
Exchanges and alternative trading systems; comments due by 7-28-98; published 4-29-98
Options disclosure documents—
Rule 135b revision; comments due by 7-31-98; published 7-1-98
Rule 9b-1 amendments; comments due by 7-31-98; published 7-1-98
Seed capital exemption; comments due by 7-27-98; published 5-28-98
Technical amendments; segment reporting; comments due by 7-31-98; published 7-1-98

OFFICE OF UNITED STATES TRADE REPRESENTATIVE

Trade Representative, Office of United States

Countervailing duty law; developing and least-developing country designations; comments due by 7-31-98; published 6-2-98

TRANSPORTATION DEPARTMENT

Coast Guard

Drawbridge operations:
Florida; comments due by 7-31-98; published 6-1-98
Virginia; comments due by 7-31-98; published 6-1-98

TRANSPORTATION DEPARTMENT

Federal Aviation Administration

Airworthiness directives:
Aviat Aircraft, Inc.; comments due by 7-30-98; published 6-5-98
Boeing; comments due by 7-30-98; published 6-15-98
McDonnell Douglas; comments due by 7-27-98; published 6-12-98

Class E airspace; comments due by 7-27-98; published 6-5-98

Federal airways and jet routes; comments due by 7-29-98; published 6-10-98

TRANSPORTATION DEPARTMENT

National Highway Traffic Safety Administration

State-issued driver's license and comparable identification documents; comments due by 7-27-98; published 6-17-98

TREASURY DEPARTMENT

Customs Service

Financial and accounting procedures:

Automated clearinghouse credit; comments due by 7-27-98; published 5-28-98

UNITED STATES INFORMATION AGENCY

Exchange visitor program:

Return to the home requirement; fee; comments due by 7-27-98; published 6-26-98

CFR CHECKLIST

This checklist, prepared by the Office of the Federal Register, is published weekly. It is arranged in the order of CFR titles, stock numbers, prices, and revision dates.

An asterisk (*) precedes each entry that has been issued since last week and which is now available for sale at the Government Printing Office.

A checklist of current CFR volumes comprising a complete CFR set, also appears in the latest issue of the LSA (List of CFR Sections Affected), which is revised monthly.

The CFR is available free on-line through the Government Printing Office's GPO Access Service at http://www.access.gpo.gov/nara/cfr/index.html. For information about GPO Access call the GPO User Support Team at 1-888-293-6498 (toll free) or 202-512-1530.

The annual rate for subscription to all revised paper volumes is $951.00 domestic, $237.75 additional for foreign mailing.

Mail orders to the Superintendent of Documents, Attn: New Orders, P.O. Box 371954, Pittsburgh, PA 15250–7954. All orders must be accompanied by remittance (check, money order, GPO Deposit Account, VISA, Master Card, or Discover). Charge orders may be telephoned to the GPO Order Desk, Monday through Friday, at **(202) 512–1800** from 8:00 a.m. to 4:00 p.m. eastern time, or FAX your charge orders to **(202) 512-2250**.

Title	Stock Number	Price	Revision Date
1, 2 (2 Reserved)	(869–034–00001–1)	5.00	[5] Jan. 1, 1998
3 (1997 Compilation and Parts 100 and 101)	(869–034–00002–9)	19.00	[1] Jan. 1, 1998
4	(869–034–00003–7)	7.00	[5] Jan. 1, 1998
5 Parts:			
1–699	(869–034–00004–5)	35.00	Jan. 1, 1998
700–1199	(869–034–00005–3)	26.00	Jan. 1, 1998
1200–End, 6 (6 Reserved)	(869–034–00006–1)	39.00	Jan. 1, 1998
7 Parts:			
1–26	(869–034–00007–0)	24.00	Jan. 1, 1998
27–52	(869–034–00008–8)	30.00	Jan. 1, 1998
53–209	(869–034–00009–6)	20.00	Jan. 1, 1998
210–299	(869–034–00010–0)	44.00	Jan. 1, 1998
300–399	(869–034–00011–8)	24.00	Jan. 1, 1998
400–699	(869–034–00012–6)	33.00	Jan. 1, 1998
700–899	(869–034–00013–4)	30.00	Jan. 1, 1998
900–999	(869–034–00014–2)	39.00	Jan. 1, 1998
1000–1199	(869–034–00015–1)	44.00	Jan. 1, 1998
1200–1599	(869–034–00016–9)	34.00	Jan. 1, 1998
1600–1899	(869–034–00017–7)	58.00	Jan. 1, 1998
1900–1939	(869–034–00018–5)	18.00	Jan. 1, 1998
1940–1949	(869–034–00019–3)	33.00	Jan. 1, 1998
1950–1999	(869–034–00020–7)	40.00	Jan. 1, 1998
2000–End	(869–034–00021–5)	24.00	Jan. 1, 1998
8	(869–034–00022–3)	33.00	Jan. 1, 1998
9 Parts:			
1–199	(869–034–00023–1)	40.00	Jan. 1, 1998
200–End	(869–034–00024–0)	33.00	Jan. 1, 1998
10 Parts:			
0–50	(869–034–00025–8)	39.00	Jan. 1, 1998
51–199	(869–034–00026–6)	32.00	Jan. 1, 1998
200–499	(869–034–00027–4)	31.00	Jan. 1, 1998
500–End	(869–034–00028–2)	43.00	Jan. 1, 1998
11	(869–034–00029–1)	19.00	Jan. 1, 1998
12 Parts:			
1–199	(869–034–00030–4)	17.00	Jan. 1, 1998
200–219	(869–034–00031–2)	21.00	Jan. 1, 1998
220–299	(869–034–00032–1)	39.00	Jan. 1, 1998
300–499	(869–034–00033–9)	23.00	Jan. 1, 1998
500–599	(869–034–00034–7)	24.00	Jan. 1, 1998
600–End	(869–034–00035–5)	44.00	Jan. 1, 1998
13	(869–034–00036–3)	23.00	Jan. 1, 1998
14 Parts:			
1–59	(869–034–00037–1)	47.00	Jan. 1, 1998
60–139	(869–034–00038–0)	40.00	Jan. 1, 1998
140–199	(869–034–00039–8)	16.00	Jan. 1, 1998
200–1199	(869–034–00040–1)	29.00	Jan. 1, 1998
1200–End	(869–034–00041–0)	23.00	Jan. 1, 1998
15 Parts:			
0–299	(869–034–00042–8)	22.00	Jan. 1, 1998
300–799	(869–034–00043–6)	33.00	Jan. 1, 1998
800–End	(869–034–00044–4)	23.00	Jan. 1, 1998
16 Parts:			
0–999	(869–034–00045–2)	30.00	Jan. 1, 1998
1000–End	(869–034–00046–1)	33.00	Jan. 1, 1998
17 Parts:			
1–199	(869–032–00048–4)	21.00	Apr. 1, 1997
200–239	(869–032–00049–2)	32.00	Apr. 1, 1997
240–End	(869–034–00050–9)	40.00	Apr. 1, 1998
18 Parts:			
1–399	(869–034–00051–7)	45.00	Apr. 1, 1998
400–End	(869–034–00052–5)	13.00	Apr. 1, 1998
19 Parts:			
1–140	(869–034–00053–3)	34.00	Apr. 1, 1998
*141–199	(869–034–00054–1)	33.00	Apr. 1, 1998
*200–End	(869–034–00055–0)	15.00	Apr. 1, 1998
20 Parts:			
1–399	(869–032–00056–5)	26.00	Apr. 1, 1997
400–499	(869–034–00057–6)	28.00	Apr. 1, 1998
500–End	(869–034–00058–4)	44.00	Apr. 1, 1998
21 Parts:			
1–99	(869–034–00059–2)	21.00	Apr. 1, 1998
*100–169	(869–034–00060–6)	27.00	Apr. 1, 1998
170–199	(869–034–00061–4)	28.00	Apr. 1, 1998
200–299	(869–034–00062–2)	9.00	Apr. 1, 1998
300–499	(869–032–00063–8)	50.00	Apr. 1, 1997
500–599	(869–032–00064–6)	28.00	Apr. 1, 1997
600–799	(869–034–00065–7)	9.00	Apr. 1, 1998
*800–1299	(869–034–00066–5)	32.00	Apr. 1, 1998
1300–End	(869–034–00067–3)	12.00	Apr. 1, 1998
22 Parts:			
1–299	(869–034–00068–1)	41.00	Apr. 1, 1998
*300–End	(869–034–00069–0)	31.00	Apr. 1, 1998
***23**	(869–034–00070–3)	25.00	Apr. 1, 1998
24 Parts:			
0–199	(869–034–00071–1)	32.00	Apr. 1, 1998
200–499	(869–034–00072–0)	28.00	Apr. 1, 1998
500–699	(869–034–00073–8)	17.00	Apr. 1, 1998
700–1699	(869–034–00074–6)	45.00	Apr. 1, 1998
1700–End	(869–034–00075–4)	17.00	Apr. 1, 1998
***25**	(869–034–00076–2)	42.00	Apr. 1, 1998
26 Parts:			
§§ 1.0-1–1.60	(869–034–00077–1)	26.00	Apr. 1, 1998
§§ 1.61–1.169	(869–032–00078–6)	44.00	Apr. 1, 1997
§§ 1.170–1.300	(869–032–00079–4)	31.00	Apr. 1, 1997
§§ 1.301–1.400	(869–034–00080–1)	23.00	Apr. 1, 1998
§§ 1.401–1.440	(869–032–00081–6)	39.00	Apr. 1, 1997
§§ 1.441-1.500	(869-034-00082-7)	29.00	Apr. 1, 1998
*§§ 1.501–1.640	(869–034–00083–5)	27.00	Apr. 1, 1998
*§§ 1.641–1.850	(869–034–00084–3)	32.00	Apr. 1, 1998
§§ 1.851–1.907	(869–034–00085–1)	36.00	Apr. 1, 1998
§§ 1.908–1.1000	(869–034–00086–0)	35.00	Apr. 1, 1998
§§ 1.1001–1.1400	(869–034–00087–8)	38.00	Apr. 1, 1998
§§ 1.1401–End	(869–032–00088–3)	45.00	Apr. 1, 1997
*2–29	(869–034–00089–4)	36.00	Apr. 1, 1998
*30–39	(869–034–00090–8)	25.00	Apr. 1, 1998
40–49	(869–034–00091–6)	16.00	Apr. 1, 1998
50–299	(869–034–00092–4)	19.00	Apr. 1, 1998
300–499	(869–034–00093–2)	34.00	Apr. 1, 1998
500–599	(869–034–00094–1)	10.00	Apr. 1, 1998
600–End	(869–034–00095–9)	9.00	Apr. 1, 1998
27 Parts:			
1–199	(869–032–00096–4)	48.00	Apr. 1, 1997

Title	Stock Number	Price	Revision Date
200–End	(869–034–00097–5)	17.00	[6] Apr. 1, 1997
28 Parts:			
1-42	(869–032–00098–1)	36.00	July 1, 1997
43-end	(869-032-00099-9)	30.00	July 1, 1997
29 Parts:			
0–99	(869–032–00100–5)	27.00	July 1, 1997
100–499	(869–032–00101–4)	12.00	July 1, 1997
500–899	(869–032–00102–2)	41.00	July 1, 1997
900–1899	(869–032–00103–1)	21.00	July 1, 1997
1900–1910 (§§ 1900 to 1910.999)	(869–032–00104–9)	43.00	July 1, 1997
1910 (§§ 1910.1000 to end)	(869–032–00105–7)	29.00	July 1, 1997
1911–1925	(869–032–00106–5)	19.00	July 1, 1997
1926	(869–032–00107–3)	31.00	July 1, 1997
1927–End	(869–032–00108–1)	40.00	July 1, 1997
30 Parts:			
1–199	(869–032–00109–0)	33.00	July 1, 1997
200–699	(869–032–00110–3)	28.00	July 1, 1997
700–End	(869–032–00111–1)	32.00	July 1, 1997
31 Parts:			
0–199	(869–032–00112–0)	20.00	July 1, 1997
200–End	(869–032–00113–8)	42.00	July 1, 1997
32 Parts:			
1–39, Vol. I		15.00	[2] July 1, 1984
1–39, Vol. II		19.00	[2] July 1, 1984
1–39, Vol. III		18.00	[2] July 1, 1984
1–190	(869–032–00114–6)	42.00	July 1, 1997
191–399	(869–032–00115–4)	51.00	July 1, 1997
400–629	(869–032–00116–2)	33.00	July 1, 1997
630–699	(869–032–00117–1)	22.00	July 1, 1997
700–799	(869–032–00118–9)	28.00	July 1, 1997
800–End	(869–032–00119–7)	27.00	July 1, 1997
33 Parts:			
1–124	(869–032–00120–1)	27.00	July 1, 1997
125–199	(869–032–00121–9)	36.00	July 1, 1997
200–End	(869–032–00122–7)	31.00	July 1, 1997
34 Parts:			
1–299	(869–032–00123–5)	28.00	July 1, 1997
300–399	(869–032–00124–3)	27.00	July 1, 1997
400–End	(869–032–00125–1)	44.00	July 1, 1997
35	(869–032–00126–0)	15.00	July 1, 1997
36 Parts			
1–199	(869–032–00127–8)	20.00	July 1, 1997
200–299	(869–032–00128–6)	21.00	July 1, 1997
300–End	(869–032–00129–4)	34.00	July 1, 1997
37	(869–032–00130–8)	27.00	July 1, 1997
38 Parts:			
0–17	(869–032–00131–6)	34.00	July 1, 1997
18–End	(869–032–00132–4)	38.00	July 1, 1997
39	(869–032–00133–2)	23.00	July 1, 1997
40 Parts:			
1–49	(869–032–00134–1)	31.00	July 1, 1997
50–51	(869–032–00135–9)	23.00	July 1, 1997
52 (52.01–52.1018)	(869–032–00136–7)	27.00	July 1, 1997
52 (52.1019–End)	(869–032–00137–5)	32.00	July 1, 1997
53–59	(869–032–00138–3)	14.00	July 1, 1997
60	(869–032–00139–1)	52.00	July 1, 1997
61–62	(869–032–00140–5)	19.00	July 1, 1997
63–71	(869–032–00141–3)	57.00	July 1, 1997
72–80	(869–032–00142–1)	35.00	July 1, 1997
81–85	(869–032–00143–0)	32.00	July 1, 1997
86	(869–032–00144–8)	50.00	July 1, 1997
87-135	(869–032–00145–6)	40.00	July 1, 1997
136–149	(869–032–00146–4)	35.00	July 1, 1997
150–189	(869–032–00147–2)	32.00	July 1, 1997
190–259	(869–032–00148–1)	22.00	July 1, 1997
260–265	(869–032–00149–9)	29.00	July 1, 1997
266–299	(869–032–00150–2)	24.00	July 1, 1997
300–399	(869–032–00151–1)	27.00	July 1, 1997
400–424	(869–032–00152–9)	33.00	[5] July 1, 1996
425–699	(869–032–00153–7)	40.00	July 1, 1997
700–789	(869–032–00154–5)	38.00	July 1, 1997
790–End	(869–032–00155–3)	19.00	July 1, 1997
41 Chapters:			
1, 1–1 to 1–10		13.00	[3] July 1, 1984
1, 1–11 to Appendix, 2 (2 Reserved)		13.00	[3] July 1, 1984
3–6		14.00	[3] July 1, 1984
7		6.00	[3] July 1, 1984
8		4.50	[3] July 1, 1984
9		13.00	[3] July 1, 1984
10–17		9.50	[3] July 1, 1984
18, Vol. I, Parts 1–5		13.00	[3] July 1, 1984
18, Vol. II, Parts 6–19		13.00	[3] July 1, 1984
18, Vol. III, Parts 20–52		13.00	[3] July 1, 1984
19–100		13.00	[3] July 1, 1984
1–100	(869–032–00156–1)	14.00	July 1, 1997
101	(869–032–00157–0)	36.00	July 1, 1997
102–200	(869–032–00158–8)	17.00	July 1, 1997
201–End	(869–032–00159–6)	15.00	July 1, 1997
42 Parts:			
1–399	(869–032–00160–0)	32.00	Oct. 1, 1997
400–429	(869–032–00161–8)	35.00	Oct. 1, 1997
430–End	(869–032–00162–6)	50.00	Oct. 1, 1997
43 Parts:			
1–999	(869–032–00163–4)	31.00	Oct. 1, 1997
1000–end	(869–032–00164–2)	50.00	Oct. 1, 1997
44	(869–032–00165–1)	31.00	Oct. 1, 1997
45 Parts:			
1–199	(869–032–00166–9)	30.00	Oct. 1, 1997
200–499	(869–032–00167–7)	18.00	Oct. 1, 1997
500–1199	(869–032–00168–5)	29.00	Oct. 1, 1997
1200–End	(869–032–00169–3)	39.00	Oct. 1, 1997
46 Parts:			
1–40	(869–032–00170–7)	26.00	Oct. 1, 1997
41–69	(869–032–00171–5)	22.00	Oct. 1, 1997
70–89	(869–032–00172–3)	11.00	Oct. 1, 1997
90–139	(869–032–00173–1)	27.00	Oct. 1, 1997
140–155	(869–032–00174–0)	15.00	Oct. 1, 1997
156–165	(869–032–00175–8)	20.00	Oct. 1, 1997
166–199	(869–032–00176–6)	26.00	Oct. 1, 1997
200–499	(869–032–00177–4)	21.00	Oct. 1, 1997
500–End	(869–032–00178–2)	17.00	Oct. 1, 1997
47 Parts:			
0–19	(869–032–00179–1)	34.00	Oct. 1, 1997
20–39	(869–032–00180–4)	27.00	Oct. 1, 1997
40–69	(869–032–00181–2)	23.00	Oct. 1, 1997
70–79	(869–032–00182–1)	33.00	Oct. 1, 1997
80–End	(869–032–00183–9)	43.00	Oct. 1, 1997
48 Chapters:			
1 (Parts 1–51)	(869–032–00184–7)	53.00	Oct. 1, 1997
1 (Parts 52–99)	(869–032–00185–5)	29.00	Oct. 1, 1997
2 (Parts 201–299)	(869–032–00186–3)	35.00	Oct. 1, 1997
3–6	(869–032–00187–1)	29.00	Oct. 1, 1997
7–14	(869–032–00188–0)	32.00	Oct. 1, 1997
15–28	(869–032–00189–8)	33.00	Oct. 1, 1997
29–End	(869–032–00190–1)	25.00	Oct. 1, 1997
49 Parts:			
1–99	(869–032–00191–0)	31.00	Oct. 1, 1997
100–185	(869–032–00192–8)	50.00	Oct. 1, 1997
186–199	(869–032–00193–6)	11.00	Oct. 1, 1997
200–399	(869–032–00194–4)	43.00	Oct. 1, 1997
400–999	(869–032–00195–2)	49.00	Oct. 1, 1997
1000–1199	(869–032–00196–1)	19.00	Oct. 1, 1997
1200–End	(869–032–00197–9)	14.00	Oct. 1, 1997
50 Parts:			
1–199	(869–032–00198–7)	41.00	Oct. 1, 1997
200–599	(869–032–00199–5)	22.00	Oct. 1, 1997
600–End	(869–032–00200–2)	29.00	Oct. 1, 1997
CFR Index and Findings Aids	(869–034–00049–6)	46.00	Jan. 1, 1998

Title	Stock Number	Price	Revision Date
Complete 1998 CFR set		951.00	1998
Microfiche CFR Edition:			
Subscription (mailed as issued)		247.00	1998
Individual copies		1.00	1998
Complete set (one-time mailing)		247.00	1997
Complete set (one-time mailing)		264.00	1996

[1] Because Title 3 is an annual compilation, this volume and all previous volumes should be retained as a permanent reference source.

[2] The July 1, 1985 edition of 32 CFR Parts 1–189 contains a note only for Parts 1–39 inclusive. For the full text of the Defense Acquisition Regulations in Parts 1–39, consult the three CFR volumes issued as of July 1, 1984, containing those parts.

[3] The July 1, 1985 edition of 41 CFR Chapters 1–100 contains a note only for Chapters 1 to 49 inclusive. For the full text of procurement regulations in Chapters 1 to 49, consult the eleven CFR volumes issued as of July 1, 1984 containing those chapters.

[4] No amendments to this volume were promulgated during the period July 1, 1996 to June 30, 1997. The volume issued July 1, 1996, should be retained.

[5] No amendments to this volume were promulgated during the period January 1, 1997 through December 31, 1997. The CFR volume issued as of January 1, 1997 should be retained.

[6] No amendments to this volume were promulgated during the period April 1, 1997, through April 1, 1998. The CFR volume issued as of April 1, 1997, should be retained.