9–28–98
Vol. 63 No. 187
Pages 51511–51776

federal register

Monday
September 28, 1998

Now Available Online via

GPO Access

Free online access to the official editions of the *Federal Register, the Code of Federal Regulations* and other Federal Register publications is available on *GPO Access*, a service of the U.S. Government Printing Office at:

http://www.access.gpo.gov/nara/index.html

For additional information on ***GPO Access*** products, services and access methods, see page II or contact the *GPO Access* User Support Team via:

★ Phone: toll-free: 1-888-293-6498

★ Email: gpoaccess@gpo.gov

Attention: Federal Agencies

Plain Language Tools Are Now Available

The Office of the Federal Register offers Plain Language Tools on its Website to help you comply with the President's Memorandum of June 1, 1998—Plain Language in Government Writing (63 FR 31883, June 10, 1998). Our address is: http://www.nara.gov/fedreg

For more in-depth guidance on the elements of plain language, read ''Writing User-Friendly Documents'' on the National Partnership for Reinventing Government (NPR) Website at: http://www.plainlanguage.gov

The **FEDERAL REGISTER** is published daily, Monday through Friday, except official holidays, by the Office of the Federal Register, National Archives and Records Administration, Washington, DC 20408, under the Federal Register Act (44 U.S.C. Ch. 15) and the regulations of the Administrative Committee of the Federal Register (1 CFR Ch. I). The Superintendent of Documents, U.S. Government Printing Office, Washington, DC 20402 is the exclusive distributor of the official edition.

The **Federal Register** provides a uniform system for making available to the public regulations and legal notices issued by Federal agencies. These include Presidential proclamations and Executive Orders, Federal agency documents having general applicability and legal effect, documents required to be published by act of Congress, and other Federal agency documents of public interest.

Documents are on file for public inspection in the Office of the Federal Register the day before they are published, unless the issuing agency requests earlier filing. For a list of documents currently on file for public inspection, see http://www.nara.gov/fedreg.

The seal of the National Archives and Records Administration authenticates the Federal Register as the official serial publication established under the Federal Register Act. Under 44 U.S.C. 1507, the contents of the **Federal Register** shall be judicially noticed.

The **Federal Register** is published in paper and on 24x microfiche. It is also available online at no charge as one of the databases on GPO Access, a service of the U.S. Government Printing Office.

The online edition of the **Federal Register** is issued under the authority of the Administrative Committee of the Federal Register as the official legal equivalent of the paper and microfiche editions (44 U.S.C. 4101 and 1 CFR 5.10). It is updated by 6 a.m. each day the **Federal Register** is published and it includes both text and graphics from Volume 59, Number 1 (January 2, 1994) forward.

GPO Access users can choose to retrieve online **Federal Register** documents as TEXT (ASCII text, graphics omitted), PDF (Adobe Portable Document Format, including full text and all graphics), or SUMMARY (abbreviated text) files. Users should carefully check retrieved material to ensure that documents were properly downloaded.

On the World Wide Web, connect to the **Federal Register** at http://www.access.gpo.gov/nara. Those without World Wide Web access can also connect with a local WAIS client, by Telnet to swais.access.gpo.gov, or by dialing (202) 512-1661 with a computer and modem. When using Telnet or modem, type swais, then log in as guest with no password.

For more information about GPO Access, contact the GPO Access User Support Team by E-mail at gpoaccess@gpo.gov; by fax at (202) 512–1262; or call (202) 512–1530 or 1–888–293–6498 (toll free) between 7 a.m. and 5 p.m. Eastern time, Monday–Friday, except Federal holidays.

The annual subscription price for the **Federal Register** paper edition is $555, or $607 for a combined **Federal Register,** Federal Register Index and List of CFR Sections Affected (LSA) subscription; the microfiche edition of the **Federal Register** including the Federal Register Index and LSA is $220. Six month subscriptions are available for one-half the annual rate. The charge for individual copies in paper form is $8.00 for each issue, or $8.00 for each group of pages as actually bound; or $1.50 for each issue in microfiche form. All prices include regular domestic postage and handling. International customers please add 25% for foreign handling. Remit check or money order, made payable to the Superintendent of Documents, or charge to your GPO Deposit Account, VISA, MasterCard or Discover. Mail to: New Orders, Superintendent of Documents, P.O. Box 371954, Pittsburgh, PA 15250–7954.

There are no restrictions on the republication of material appearing in the **Federal Register.**

How To Cite This Publication: Use the volume number and the page number. Example: 63 FR 12345.

SUBSCRIPTIONS AND COPIES

PUBLIC	
Subscriptions:	
Paper or fiche	**202–512–1800**
Assistance with public subscriptions	**512–1806**
General online information	**202–512–1530; 1–888–293–6498**
Single copies/back copies:	
Paper or fiche	**512–1800**
Assistance with public single copies	**512–1803**
FEDERAL AGENCIES	
Subscriptions:	
Paper or fiche	**523–5243**
Assistance with Federal agency subscriptions	**523–5243**

Printed on recycled paper.

Contents

Federal Register

Vol. 63, No. 187

Monday, September 28, 1998

Agricultural Marketing Service
RULES
Oranges, grapefruit, tangerines, and tangelos grown in—
Florida, 51511–51518

Agriculture Department
See Agricultural Marketing Service

Architectural and Transportation Barriers Compliance Board
RULES
Americans with Disabilities Act; implementation:
Accessibility guidelines—
Transportation vehicles; over-the-road buses, 51694–51703

Army Department
See Engineers Corps
NOTICES
Patent licenses; non-exclusive, exclusive, or partially exclusive:
Active/passive signature enhancer, etc., 51566–51567
Method for generating and modifying simulated terrain surfaces and representing terrain related processes, etc., 51567
Northrop Grumman, 51567
Tactical Medical Solutions, LLC, 51567

Arts and Humanities, National Foundation
See National Foundation on the Arts and the Humanities

Children and Families Administration
NOTICES
Grants and cooperative agreements; availability, etc.:
Low income home energy assistance program; 1997 FY funds reallotment, 51583–51584

Commerce Department
See International Trade Administration
See Minority Business Development Agency
See National Institute of Standards and Technology

Committee for the Implementation of Textile Agreements
NOTICES
Special access and special regime programs:
H.F. Manufacturing; participation denial, 51564

Copyright Office, Library of Congress
NOTICES
Privacy Act:
Systems of records, 51609–51622

Defense Department
See Army Department
See Engineers Corps
PROPOSED RULES
Federal Acquisition Regulation (FAR):
Foreign acquisition; Part 25 rewrite, 51641–51667
NOTICES
Civilian health and medical program of uniformed services (CHAMPUS):
TRICARE program—
Mental health rate updates; 1999 FY, 51564–51566
Meetings:
Defense Policy Board Advisory Committee, 51566
National Security Senior Advisory Board, 51566
Science Board task forces, 51566

Drug Enforcement Administration
NOTICES
Applications, hearings, determinations, etc.:
Caragine, Paul J., Jr., M.D., 51592–51602

Education Department
NOTICES
Agency information collection activities:
Submission for OMB review; comment request, 51568

Employment and Training Administration
NOTICES
Adjustment assistance:
El & El Novelty Co. et al., 51607
Gould Electronics, Inc., 51607
Kevlaur Industries, Inc., et al., 51607–51608
Kleinerts Inc., 51608–51609
LTV Steel Corp., 51609
Try America, Inc., 51609
Adjustment assistance and NAFTA transitional adjustment assistance:
Lucas Varity North American Light, Vehicle Braking Systems, et al., 51605–51606
Grants and cooperative agreements; availability, etc.:
Job Training Partnership Act—
Indian and Native American employment and training programs, 51771–51776
NAFTA transitional adjustment assistance:
Gould Electronics, Inc., 51609

Energy Department
See Energy Efficiency and Renewable Energy Office
See Federal Energy Regulatory Commission
NOTICES
Meetings:
Environmental Management Site-Specific Advisory Board—
Kirtland Area Office (Sandia), NM, 51569
Paducah Gaseous Diffusion Plant, KY, 51569–51570
Rocky Flats, CO, 51568–51569
Powerplant and industrial fuel use; new electric powerplant coal capability:
Self-certification filings—
Panda Paris Power, L.P., 51570

Energy Efficiency and Renewable Energy Office
NOTICES
Meetings:
Appliance Energy Efficiency Standards Advisory Committee, 51570–51571

Engineers Corps
NOTICES
Environmental statements; notice of intent:
Tatitlek, AK; small boat harbor, 51567–51568

Environmental Protection Agency
RULES
Clean Air Act:
Acid rain program—
Allowances reallocation for utility units in 1998; revision methodology, 51705–51766
Hazardous waste:
State underground storage tank program approvals—
Virginia, 51528–51529
Superfund program:
National oil and hazardous substances contingency plan—
National priorities list update, 51529–51531
NOTICES
Superfund; response and remedial actions, proposed settlements, etc.:
Hansen Container Site, CO, 51576

Federal Aviation Administration
RULES
Air traffic operating and flight rules, etc.:
Kodak Albuquerque International Balloon Fiesta, NM; airspace and flight operations requirements, 51767–51770
Airworthiness directives:
Maule Aerospace Technology Corp., 51520
Rolls-Royce Ltd.; withdrawn, 51525
Twin Commander Aircraft Corp., 51520–51525
PROPOSED RULES
Airworthiness directives:
International Aero Engines AG, 51545–51546
NOTICES
Meetings:
Air Traffic Procedures Advisory Committee, 51633
RTCA, Inc., 51633–51634
Noise abatement:
San Francisco International Airport, CA; Stage 2 aircraft operations; restricted hours extended, 51634
Passenger facility charges; applications, etc.:
Michiana Regional Transportation Center, IN, 51634–51635

Federal Communications Commission
NOTICES
Rulemaking proceedings; petitions filed, granted, denied, etc., 51576

Federal Emergency Management Agency
RULES
Flood insurance; communities eligible for sale:
Iowa et al., 51531–51533

Federal Energy Regulatory Commission
PROPOSED RULES
Natural Gas Policy Act:
Interstate natural gas pipelines—
Short-term transportation services regulation; pipeline capacity auctions workshop, 51547
NOTICES
Hydroelectric applications, 51575–51576
Applications, hearings, determinations, etc.:
Crossroads Pipeline Co., 51571–51572
DukeSolutions, Inc., 51572
Eastern Shore Natural Gas Co., 51572
Florida Gas Transmission Co., 51572–51573
KN Interstate Gas Transmission Co., 51573
NorAm Gas Transmission Co., 51573
Northern Natural Gas Co., 51573–51574
Williams Gas Pipelines Central, Inc., 51574
Young Gas Storage Co., Ltd., 51574–51575

Federal Maritime Commission
NOTICES
Freight forwarder licenses:
Acmetrans Worldwide Cargo Services, Inc., et al., 51576–51577
Mina-Saito, Josephine D., et al., 51577

Federal Railroad Administration
RULES
Track safety standards:
Miscellaneous amendments
Correction, 51638
NOTICES
Exemption petitions, etc.:
National Railroad Passenger Corp. (Amtrak), 51635

Federal Reserve System
NOTICES
Banks and bank holding companies:
Change in bank control, 51577–51578
Formations, acquisitions, and mergers, 51578
Permissible nonbanking activities, 51578–51579
Meetings; Sunshine Act, 51579

Federal Trade Commission
NOTICES
Prohibited trade practices:
Care Technologies, Inc., 51579–51580
Del Pharmaceuticals, Inc., et al., 51580–51582
Pfizer Inc., 51582–51583

Fish and Wildlife Service
NOTICES
Comprehensive conservation plans; availability, etc.:
Cabeza Prieta National Wildlife Refuge and Wilderness, AZ, 51585–51586

Food and Drug Administration
RULES
Food additives:
Adhesive coatings and components—
2-hydroxy-1-[4-(2-hydroxyethoxy)phenyl]-2-methyl-1-propanone, 51527–51528
NOTICES
Meetings:
Food safety risk assessment clearinghouse; technical workshop postponed, 51584
Medical Devices Advisory Committee, 51584–51585

General Services Administration
PROPOSED RULES
Federal Acquisition Regulation (FAR):
Foreign acquisition; Part 25 rewrite, 51641–51667

Geological Survey
NOTICES
Federal Geographic Data Committee:
Biological nomenclature and taxonomy data standard, 51586–51588

Health and Human Services Department
See Children and Families Administration
See Food and Drug Administration

Immigration and Naturalization Service
NOTICES
Temporary protected status program designations:
Somalia, 51602–51603

Interior Department
See Fish and Wildlife Service
See Geological Survey
See Minerals Management Service
See National Park Service
NOTICES
Committees; establishment, renewal, termination, etc.:
Minerals Management Advisory Board, 51585

Internal Revenue Service
NOTICES
Meetings:
Art Advisory Panel, 51637

International Trade Administration
NOTICES
Antidumping:
Brass sheet and strip from—
Canada, 51563
Heavy forged hand tools, finished or unfinished, with or without handles, from—
China, 51563–51564

International Trade Commission
NOTICES
Meetings; Sunshine Act, 51590

Justice Department
See Drug Enforcement Administration
See Immigration and Naturalization Service
See Justice Programs Office
See Victims of Crime Office
RULES
Organization, functions, and authority delegations:
Executive Office for Immigration Review and Board of Immigration Appeals, 51518–51519
NOTICES
Agency information collection activities:
Proposed collection; comment request, 51590–51591
Submission for OMB review; comment request, 51591–51592

Justice Programs Office
NOTICES
Agency information collection activities:
Submission for OMB review; comment request, 51603–51604

Labor Department
See Employment and Training Administration

Libraries and Information Science, National Commission
See National Commission on Libraries and Information Science

Library of Congress
See Copyright Office, Library of Congress

Minerals Management Service
NOTICES
Meetings:
Minerals Management Advisory Board, 51588

Minority Business Development Agency
NOTICES
Grants and cooperative agreements; availability, etc.:
Minority business opportunity committee program, 51564

National Aeronautics and Space Administration
PROPOSED RULES
Federal Acquisition Regulation (FAR):
Foreign acquisition; Part 25 rewrite, 51641–51667

National Commission on Libraries and Information Science
RULES
Organization, functions, and authority delegations:
Technical amendments, 51533–51534

National Foundation on the Arts and the Humanities
NOTICES
Meetings:
Leadership Initiatives Advisory Panel, 51622–51623

National Highway Traffic Safety Administration
RULES
Motor vehicle safety standards:
Nonconforming vehicles—
Importation eligibility; determinations; list, 51534–51544
PROPOSED RULES
Motor vehicle safety standards:
Occupant crash protection—
Safety equipment removal; exemptions from make inoperative prohibition for persons with disabilities, 51547–51562

National Institute of Standards and Technology
RULES
Fastener Quality Act; implementation, 51525–51526

National Park Service
NOTICES
Concession contract negotiations:
Bighorn Canyon National Recreation Area, MT; Ok-A-Beh Marina; boat rentals, etc.; correction, 51588–51589
National Register of Historic Places:
Pending nominations, 51589
Native American human remains and associated funerary objects:
Robert S. Peabody Museum of Archaeology, MA; inventory from New London County, CT, 51589
U.S. Army Engineers Corps, Albuquerque, NM; inventory, 51589–51590

National Science Foundation
NOTICES
Meetings:
Bioengineering and Environmental Systems Special Emphasis Panel, 51623
Biological Sciences Advisory Committee, 51623
Biomolecular Structure and Function Advisory Panel, 51623
Computer-Communications Research Special Emphasis Panel, 51623
Elementary, Secondary, and Informal Education Special Emphasis Panel, 51623–51624
Experimental and Integrative Activities Special Emphasis Panel, 51624
Neuroscience Advisory Panel, 51624–51625
Physics Special Emphasis Panel, 51625

Physiology and Ethology Advisory Panel, 51625
Social and Political Science Advisory Panel, 51625

National Women's Business Council
NOTICES
Meetings; Sunshine Act, 51625

Nuclear Regulatory Commission
PROPOSED RULES
Special nuclear material; domestic licensing:
Revisions; meeting with Nuclear Energy Institute representatives, 51545
NOTICES
Environmental statements; availability, etc.:
Duke Energy Corp., 51626–51628
Houston Lighting & Power Co. et al., 51628–51629
Applications, hearings, determinations, etc.:
Tennessee Valley Authority, 51626

Public Health Service
See Food and Drug Administration

Securities and Exchange Commission
NOTICES
Applications, hearings, determinations, etc.:
London Pacific Life & Annuity Co. et al., 51629–51631
Room Plus, Inc., 51631
Specialty Teleconstructors, Inc., 51631–51632

Social Security Administration
NOTICES
Agency information collection activities:
Proposed collection; comment request, 51632

State Department
NOTICES
Senior Executive Service:
Performance Review Board; membership, 51632

Surface Transportation Board
NOTICES
Railroad services abandonment:
Grand Trunk Western Railroad Inc., 51635–51636

Textile Agreements Implementation Committee
See Committee for the Implementation of Textile Agreements

Transportation Department
See Federal Aviation Administration
See Federal Railroad Administration
See National Highway Traffic Safety Administration
See Surface Transportation Board
RULES
Americans with Disabilities Act; implementation:
Accessibility guidelines—
Transportation vehicles; over-the-road buses, 51694–51703
Accessibility guidelines for transportation services and vehicles—
Transportation vehicles; over-the-road buses, 51669–51694
NOTICES
Aviation proceedings:
Agreements filed; weekly receipts, 51632–51633
Certificates of public convenience and necessity and foreign air carrier permits; weekly receipts, 51633

Treasury Department
See Internal Revenue Service
NOTICES
Senior Executive Service:
Legal Division Performance Review Board; membership, 51636

Veterans Affairs Department
NOTICES
Agency information collection activities:
Proposed collection; comment request, 51637

Victims of Crime Office
NOTICES
Agency information collection activities:
Proposed collection; comment request, 51604

Separate Parts In This Issue

Part II
Department of Defense, General Services Administration, National Aeronautics and Space Administration, 51641–51667

Part III
Department of Transportation; Architectural and Transportation Barriers Compliance Board, 51669–51703

Part IV
Environmental Protection Agency, 51705–51766

Part V
Department of Transportation, Federal Aviation Administration, 51767–51770

Part VI
Department of Labor, Employment and Training Administration, 51771–51776

Reader Aids
Consult the Reader Aids section at the end of this issue for phone numbers, online resources, finding aids, reminders, and notice of recently enacted public laws.

CFR PARTS AFFECTED IN THIS ISSUE

A cumulative list of the parts affected this month can be found in the Reader Aids section at the end of this issue.

7 CFR
905 51511

8 CFR
3 51518

10 CFR
Proposed Rules:
70 51545

14 CFR
39 (3 documents) 51520, 51525
91 51768
Proposed Rules:
39 51545

15 CFR
280 51525

18 CFR
Proposed Rules:
161 51547
250 51547
284 51547

21 CFR
175 51527

28 CFR
0 51518

36 CFR
1192 51694

40 CFR
73 51706
281 51528
300 (2 documents) 51529, 51530

44 CFR
64 51531

45 CFR
1700 51533

48 CFR
Proposed Rules:
1 51642
5 51642
6 51642
9 51642
12 51642
13 51642
14 51642
15 51642
17 51642
25 51642
52 51642

49 CFR
37 51670
38 51694
213 51638
593 51534
Proposed Rules:
595 51547

Rules and Regulations

Federal Register

Vol. 63, No. 187

Monday, September 28, 1998

This section of the FEDERAL REGISTER contains regulatory documents having general applicability and legal effect, most of which are keyed to and codified in the Code of Federal Regulations, which is published under 50 titles pursuant to 44 U.S.C. 1510.

The Code of Federal Regulations is sold by the Superintendent of Documents. Prices of new books are listed in the first FEDERAL REGISTER issue of each week.

DEPARTMENT OF AGRICULTURE

Agricultural Marketing Service

7 CFR Part 905

[Docket No. FV98–905–4 IFR]

Oranges, Grapefruit, Tangerines, and Tangelos Grown in Florida; Limiting the Volume of Small Red Seedless Grapefruit

AGENCY: Agricultural Marketing Service, USDA.

ACTION: Interim final rule with request for comments.

SUMMARY: This interim final rule limits the volume of small red seedless grapefruit entering the fresh market under the marketing order covering oranges, grapefruit, tangerines, and tangelos grown in Florida. The marketing order is administered locally by the Citrus Administrative Committee (committee). This rule limits the volume of size 48 and/or size 56 red seedless grapefruit handlers can ship during the first 11 weeks of the 1998–1999 season beginning in September. The weekly percentage for the first seven weeks (September 21 through November 8) is 37 percent and for the final four weeks (November 9 through December 16) is 32 percent. This limitation provides a sufficient supply of small sized red seedless grapefruit to meet market demand, without saturating all markets with these small sizes. This rule is necessary to help stabilize the market and improve grower returns.

DATES: Effective September 29, 1998. Comments received by October 8, 1998 will be considered prior to issuance of a final rule.

ADDRESSES: Interested persons are invited to submit written comments concerning this rule. Comments must be sent to the Docket Clerk, Fruit and Vegetable Programs, AMS, USDA, room 2525–S, P.O. Box 96456, Washington, DC 20090–6456; Fax: (202) 205–6632; or E-mail: moabdocket__clerk@usda.gov. All comments should reference the docket number and the date and page number of this issue of the **Federal Register** and will be made available for public inspection in the Office of the Docket Clerk during regular business hours.

FOR FURTHER INFORMATION CONTACT: William G. Pimental, Marketing Specialist, Southeast Marketing Field Office, Marketing Order Administration Branch, F&V, AMS, USDA, P.O. Box 2276, Winter Haven, Florida 33883; telephone: (941) 299–4770, Fax: (941) 299–5169; or Anne Dec, Marketing Order Administration Branch, F&V, AMS, USDA, room 2522–S, P.O. Box 96456, Washington, DC 20090–6456; telephone: (202) 720–2491, Fax: (202) 205–6632. Small businesses may request information on compliance with this regulation by contacting Jay Guerber, Marketing Order Administration Branch, Fruit and Vegetable Programs, AMS, USDA, room 2525–S, P.O. Box 96456, Washington, DC 20090–6456; telephone: (202) 720–2491, Fax: (202) 205–6632.

SUPPLEMENTARY INFORMATION: This rule is issued under Marketing Agreement No. 84 and Marketing Order No. 905, both as amended (7 CFR part 905), regulating the handling of oranges, grapefruit, tangerines, and tangelos grown in Florida, hereinafter referred to as the ''order.'' The marketing agreement and order are effective under the Agricultural Marketing Agreement Act of 1937, as amended (7 U.S.C. 601–674), hereinafter referred to as the ''Act.''

The Department of Agriculture (Department) is issuing this rule in conformance with Executive Order 12866.

This rule has been reviewed under Executive Order 12988, Civil Justice Reform. This rule limits the volume of size 48 and/or size 56 red seedless grapefruit handlers can ship during the first 11 weeks of the 1998–99 season beginning in September. This rule will not preempt any State or local laws, regulations, or policies, unless they present an irreconcilable conflict with this rule.

The Act provides that administrative proceedings must be exhausted before parties may file suit in court. Under section 608c(15)(A) of the Act, any handler subject to an order may file with the Secretary a petition stating that the order, any provision of the order, or any obligation imposed in connection with the order is not in accordance with law and request a modification of the order or to be exempted therefrom. A handler is afforded the opportunity for a hearing on the petition. After the hearing the Secretary would rule on the petition. The Act provides that the district court of the United States in any district in which the handler is an inhabitant, or has his or her principal place of business, has jurisdiction to review the Secretary's ruling on the petition, provided an action is filed not later than 20 days after date of the entry of the ruling.

The order provides for the establishment of grade and size requirements for Florida citrus, with the concurrence of the Secretary. These grade and size requirements are designed to provide fresh markets with citrus fruit of acceptable quality and size. This helps create buyer confidence and contributes to stable marketing conditions. This is in the interest of growers, handlers, and consumers, and is designed to increase returns to Florida citrus growers. The current minimum grade standard for red seedless grapefruit is U.S. No. 1, and the minimum size requirement is size 56 (at least 3 5/16 inches in diameter).

Section 905.52 of the citrus marketing order provides authority to limit shipments of any grade or size, or both, of any variety of Florida citrus. Such limitations may restrict the shipment of a portion of a specified grade or size of a variety. Under such a limitation, the quantity of such grade or size that may be shipped by a handler during a particular week is established as a percentage of the total shipments of such variety by such handler in a prior period, established by the committee and approved by the Secretary, in which the handler shipped such variety.

Section 905.153 of the order provides procedures for limiting the volume of small red seedless grapefruit entering the fresh market. The procedures specify that the committee may recommend that only a certain percentage of size 48 and/or 56 red seedless grapefruit be made available for shipment into fresh market channels for any week or weeks during the regulatory period. The 11 week period begins the

third Monday in September. Under such a limitation, the quantity of sizes 48 and/or 56 red seedless grapefruit that may be shipped by a handler during a regulated week is calculated using the recommended percentage. By taking the recommended weekly percentage times the average weekly volume of red grapefruit handled by such handler in the previous five seasons, handlers can calculate the volume of sizes 48 and/or 56 they may ship in a regulated week.

This rule limits the volume of small red seedless grapefruit entering the fresh market for each week of an 11 week period beginning the week of September 21, 1998. The rule limits the volume of sizes 48 and/or 56 red seedless grapefruit by establishing a weekly percentage for each of the 11 weeks. This rule establishes the weekly percentage for the first seven weeks (September 21 through November 8) at 37 percent and for the final four weeks (November 9 through December 6) at 32 percent. This is a change in the percentages originally recommended by the committee. The committee had voted to establish a weekly percentage of 25 percent for each of the 11 weeks in a vote of 14 in favor to 2 opposed at its meeting on May 22, 1998. The committee's initial recommendation was issued as a proposed rule published on August 11, 1998 (63 FR 42764). No comments were received during the comment period which expired August 31, 1998. The committee subsequently recommended adjusting the proposed percentages at its meeting September 3, 1998, in a vote of 13 in favor to 1 opposed.

For the seasons 1994–95, 1995–96, and 1996–97, returns on red seedless grapefruit had been declining, often not returning the cost of production. On tree prices for red seedless grapefruit had fallen steadily from $9.60 per carton (3/5 bushel) during the 1989–90 season, to $3.45 per carton during the 1994–95 season, to a low of $1.41 per carton during the 1996–97 season.

The committee determined that one problem contributing to the market's condition was the excessive number of small sized grapefruit shipped early in the marketing season. In the 1994–95, 1995–96, and 1996–97 seasons, sizes 48 and 56 accounted for 34 percent of total shipments during the 11 week regulatory period, with the average weekly percentage exceeding 40 percent of shipments. This contrasts with sizes 48 and 56 representing only 26 percent of total shipments for the remainder of the season. While there is a market for early grapefruit, the shipment of large quantities of small red seedless grapefruit in a short period oversupplies the fresh market for these sizes and negatively impacts the market for all sizes.

For the majority of the season, larger sizes return higher prices than smaller sizes. However, there is a push early in the season to get fruit into the market to take advantage of the high prices available at the beginning of the season. The early season crop tends to have a greater percentage of small sizes. This creates a glut of smaller, lower priced fruit on the market, driving down the price for all sizes. Early in the season, larger sized fruit commands a premium price. In some cases, the f.o.b. is $4 to $6 a carton more than for the smaller sizes. In early October, the f.o.b. for a size 27 averages around $10.00 per carton. This compares to an average f.o.b. of $5.50 per carton for size 56. By the end of the 11 week period covered in this rule, the f.o.b. for large sizes dropped to within two dollars of the f.o.b. for small sizes.

In the three seasons prior to 1997–98, prices of red seedless grapefruit fell from a weighted average f.o.b. of $7.80 per carton to an average f.o.b. of $5.50 per carton during the period covered by this rule. Even though later in the season the crop sized to naturally limit the amount of smaller sizes available for shipment, the price structure in the market had already been negatively affected. During the three seasons, the market did not recover, and the f.o.b. for all sizes fell to around $5.00 to $6.00 per carton for most of the rest of the season.

The committee believes that the over shipment of smaller sized red seedless grapefruit early in the season has contributed to below production cost returns for growers and lower on tree values. An economic study done by the University of Florida—Institute of Food and Agricultural Sciences (UF–IFAS) in May 1997, found that on tree prices had fallen from a high near $7.00 in 1991–92 to around $1.50 for the 1996–97 season. The study projected that if the industry elected to make no changes, the on tree price would remain around $1.50. The study also indicated that increasing minimum size restrictions could help raise returns.

To address this issue, the committee voted to utilize the provisions of § 905.153, and establish weekly percentage of size regulation during the first 11 weeks of the 1997–98 season. The initial recommendation from the committee was to set the weekly percentage at 25 percent for each of the 11 weeks. As more information on the crop became available, and as the season progressed, the committee met several times and adjusted its recommendations for the weekly percentages. The committee considered information from past seasons, crop estimates, fruit size, and other information to make their recommendations. Actual weekly percentages established during the 11 week period during the 1997–98 season were 50 percent for the first three weeks, and 35 percent for the other eight weeks.

In making this recommendation, the committee reviewed its experiences from the past season, and those of prior seasons. The committee believes establishing weekly percentages last season was successful. The committee examined shipment data covering the 11 week regulatory period for the last season and the four prior seasons. The information contained the amounts and percentages of sizes 48 and 56 shipped during each week and weekly f.o.b. figures. During the 11 week period, the regulation was successful at helping maintain prices at a higher level than the prior season, and sizes 48 and 56 by count and as a percentage of total shipments were reduced.

In comparison with f.o.b. prices from the 1996–97 season, for weeks when pricing information was available (weeks 6 through 11), last season's numbers were higher in five of the six weeks. The average f.o.b. for these weeks was $6.28 for the 1996–97 season and $6.55 for the 1997–98 season. Last season, sizes 48 and 56 represented only 31 percent of total shipments during the 11 week regulatory period as compared to 38 percent during the previous season. There was also a 15 percent reduction in shipments of sizes 48 and 56 by count for the 11 weeks.

Other information also indicates the regulation was successful. In past seasons, the on tree price had been dropping steadily. However, on tree prices for the month following the 11 weeks of regulation indicate that in December 1997 the on tree price for grapefruit was $2.26 compared to $1.55 for the previous season.

The committee was concerned that the glut of smaller, lower priced fruit on the early market was driving down the price for all sizes. There was a steep decline in prices for larger sizes in previous seasons. During the six weeks from mid-October through November, prices for sizes 23, 27, 32, and 36 fell by 28, 27, 21, and 20 percent, respectively, during the 1996–97 season. Prices for the same sizes during the same period fell only 5, 5, 2, and 7 percent, respectively, last season with regulation. In fact, prices for all sizes were firmer during this period for last season when compared to the previous year, with the weighted average price

dropping only 9 percent during this period as compared to 22 percent for the previous season.

An economic study done by Florida Citrus Mutual (Lakeland, Florida) in April 1998, found that the weekly percentage regulation had been effective. The study stated that part of the strength in early season pricing appeared to be due to the use of the weekly percentage rule to limit the volume of sizes 48 and 56. It said that prices were generally higher across the size spectrum with sizes 48 and 56 having the largest gains, with larger sized grapefruit registering modest improvements. The rule shifted the size distribution toward the higher priced, larger sized grapefruit which helped raise weekly average f.o.b. prices. It further stated that sizes 48 and 56 grapefruit accounted for around 27 percent of domestic shipments during the same 11 weeks during the 1996–97 season. Comparatively, sizes 48 and 56 accounted for only 17 percent of domestic shipments during the same period last season, as small sizes were used to supply export customers with preferences for small sized grapefruit.

A subcommittee had been formed to examine how weekly percentage of size regulation could best be used. The subcommittee recommended to the full committee that the weekly percentage of size regulation should be set at 25 percent for the 11 week period. Members believed that the problems associated with an uncontrolled volume of small sizes entering the market early in the season would continue. The subcommittee thought that to provide the committee with the most flexibility, the weekly percentage should be set at 25 percent for each of the 11 weeks in the regulated period. The subcommittee believed it was best to set regulation at the most restrictive level, and then relax the percentage as warranted by conditions later in the season. The subcommittee also recommended that the committee meet on a regular basis early in the season to consider adjustments in the weekly percentage rates as was done in the previous season.

The recommendations of the subcommittee were reviewed by the committee at its meeting on May 22, 1998. In its discussion, the committee recognized the need for and the benefits of the weekly percentage regulation. The committee agreed with the findings of the subcommittee, and recommended establishing the base percentage at 25 percent for each of the regulation weeks. This is as restrictive as § 905.153 will allow.

In making this recommendation, the committee considered that by establishing regulation at 25 percent, they could meet again in August and the months following and use the best information available to help the industry and the committee make the most informed decisions as to whether the established percentage is appropriate.

Based on this information and the experiences from last season, the committee agreed to establish the weekly percentage at the most restrictive level, then meet again as needed when additional information is available and determine whether the set percentage level is appropriate. They said this is essentially what was done the prior year, and it had been very successful. The committee had met in May 1997, and recommended a weekly percentage be established at 25 percent for each of the eleven weeks. In August, the committee met again, and recommended that the weekly percentage be relaxed. They met again in October, and recommended further relaxations. Any changes to the weekly percentages established by this rule would require additional rulemaking and the approval of the Secretary.

The committee noted that more information helpful in determining the appropriate weekly percentages would be available after August. At the time of the May meeting, grapefruit had not yet begun to size, giving little indication as to the distribution of sizes. Only the most preliminary of crop estimates was available, with the official estimate not to be issued until October.

The committee met again on September 3, 1998, and revisited the weekly percentage issue and reviewed the information it had acquired since its May 22, 1998, meeting. At the meeting, the committee recommended that the weekly percentages be changed from 25 percent for each of the 11 regulated weeks to 37 percent for the first seven weeks (September 21 through November 8), and 32 percent for the next four weeks (November 9 through December 6).

In its discussion of this change, the committee reviewed the initial percentages recommended and the current state of the crop. The committee also reexamined shipping information from past seasons, looking particularly at volume across the 11 weeks. Based on this review, the committee agreed that setting the weekly percentage at 25 percent would be too restrictive and that allowing 37 percent for the first seven weeks and 32 percent for the final four weeks is more appropriate.

In its deliberations, the committee agreed that the weekly percentage of 35 percent that was in place for the majority of the weeks regulated last season was effective. This percentage seemed to have provided a sufficient volume of small sizes to service its markets, while being restrictive enough to prevent over supply.

During deliberations last season on weekly percentages, the committee considered how past shipments had affected the market. Based on statistical information, committee members believed there was an indication that once shipments of sizes 48 and 56 reached levels above 250,000 cartons a week, prices declined on those and most other sizes of red seedless grapefruit. The committee believed that if shipments of small sizes could be maintained at around 250,000 cartons a week, prices should stabilize and demand for larger, more profitable sizes should increase.

As for this season, the committee wanted to recommend a weekly percentage that would provide a sufficient volume of small sizes without adversely impacting the markets for larger sizes. They also originally recommended that the percentage for each of the 11 weeks be established at the 25 percent level. This percentage, when combined with the average weekly shipments for the total industry, provided a total industry allotment of approximately 244,000 cartons of sizes 48 and/or 56 red seedless grapefruit per regulated week. The total shipments of small red seedless grapefruit would approach the 250,000 carton mark during regulated weeks without exceeding it.

However, during the 11 week period of weekly percentage regulation last season, the committee recommended increasing the weekly percentages to 35 percent for the majority of the 11 weeks, similar to what is being recommended for this season. Even with the weekly percentage at 35 percent, shipments of sizes 48 and 56 remained close to the 250,000 carton mark during the 11 weeks. In only 3 of the 11 weeks did the volume of sizes 48 and 56 exceed 250,000 cartons, and even then, by not more than 35,000 cartons.

The committee recognized that since last season a number of packinghouses have gone out of business, lowering the total allotment available to the industry. The committee believes that by adjusting the 35 percent to 37 percent provides for the allotment lost and increases the total allotment available to the industry for loan or transfer. Therefore, the committee recommended relaxing the weekly percentage to 37

percent for the first seven weeks of the regulated period.

The committee further recommended that the weekly percentage for the last four weeks of the 11 weeks be established at 32 percent. The committee resolved that a lower percentage was desirable moving into the last four weeks of regulation. The committee believes that 32 percent is a viable figure as the season progresses because the crop has begun to size and there is a greater availability of larger sizes. The committee believes that as the industry moves into the season and shipments increase, that a weekly percentage of 32 percent will provide the best balance between supply and demand for small sized red seedless grapefruit.

The committee again included in its deliberations that if crop and market conditions should change, the committee could recommend that the percentages be increased or eliminated to provide for the shipment of more small sizes in any one, or all of the 11 weeks. After examining the way the crop is sizing and maturing, the committee believes the rule at 25 percent would have been too restrictive and that the change to 37 percent for the first seven weeks and 32 percent for the last four weeks is preferable. They decided that a loosening of the regulated percentages could be done without adversely affecting the marketable quantity and returns on these small sizes. This rule will allow all packinghouses to take advantage of the increased percentages, while not oversupplying the market.

While the official crop estimate will not be available until October, there are indications that the grapefruit crop will not be as large as in 1997–98. Also, grapefruit has been slow in maturing this season due to scattered rains and hot summer temperatures. This is causing the harvest season to start late and may mean a greater volume of smaller sizes. Using this information on the 1998–99 crop, the committee members believe that relaxing the weekly percentages as recommended will provide enough small sizes to supply its markets without disrupting the markets for larger sizes.

Under § 905.153, the quantity of sizes 48 and/or 56 red seedless grapefruit that may be shipped by a handler during a regulated week will be calculated using the recommended percentage of 37 or 32 percent depending on the regulated week. By taking the weekly percentage times the average weekly volume of red grapefruit handled by such handler in the previous five seasons, handlers can calculate the volume of sizes 48 and/or 56 they may ship in a regulated week.

An average week has been calculated by the committee for each handler using the following formula. The total red seedless grapefruit shipments by a handler during the 33 week period beginning the third Monday in September and ending the first Sunday in May during the previous five seasons are added and divided by five to establish an average season. This average season is then divided by the 33 weeks to derive the average week. This average week is the base for each handler for each of the 11 weeks of the regulatory period. The weekly percentage, in this case 37 or 32 percent, is multiplied by a handler's average week. The product is that handler's allotment of sizes 48 and/or 56 red seedless grapefruit for the given week.

Under this rule, the calculated allotment is the amount of small sized red seedless grapefruit a handler may ship. If the minimum size established under § 905.52 remains at size 56, handlers can fill their allotment with size 56, size 48, or a combination of the two sizes such that the total of these shipments are within the established limits. If the minimum size under the order is 48, handlers can fill their allotment with size 48 fruit such that the total of these shipments are within the established limits. The committee staff performs the specified calculations and provides them to each handler on or before August 15 each year.

To illustrate, suppose Handler A shipped a total of 50,000 cartons, 64,600 cartons, 45,000 cartons, 79,500 cartons, and 24,900 cartons of red seedless grapefruit in the last five seasons, respectively. Adding these season totals and dividing by five yields an average season of 52,800 cartons. The average season is then divided by 33 weeks to yield an average week, in this case, 1,600 cartons. This is Handler A's base. The weekly percentage of 37 percent is then applied to this amount. This provides this handler with a weekly allotment of 592 cartons (1,600 X .37) of size 48 and/or 56.

The average week for handlers with less than five previous seasons of shipments is calculated by the committee by averaging the total shipments for the seasons they did ship red seedless grapefruit during the immediately preceding five years and dividing that average by 33. New handlers with no record of shipments have no prior period on which to base their average week. Such new handlers can ship small sizes equal to 37 percent of their total volume of shipments during their first shipping week. Once a new handler has established shipments, their average week will be calculated as an average of the weeks they have shipped during the current season.

This rule establishes weekly percentage of 37 percent for the first seven weeks (September 21 through November 8), and 32 percent for the next four weeks (November 9 through December 6). The regulatory period begins the third Monday in September. Each regulation week begins Monday at 12:00 a.m. and ends at 11:59 p.m. the following Sunday, since most handlers keep records based on Monday being the beginning of the work week. If necessary, the committee could meet and recommend a higher percentage for any given week or weeks of the regulatory period. Any such recommendation would require approval of the Secretary.

The rules and regulations contain a variety of provisions designed to provide handlers with some marketing flexibility. When regulation is established by the Secretary for a given week, the committee calculates the quantity of small red seedless grapefruit which may be handled by each handler. Section 905.153(d) provides allowances for overshipments, loans, and transfers of allotment. These allowances should allow handlers the opportunity to supply their markets while limiting the impact of small sizes on a weekly basis.

During any week for which the Secretary has fixed the percentage of sizes 48 and/or 56 red seedless grapefruit, any handler could handle an amount of sizes 48 and/or 56 red seedless grapefruit not to exceed 110 percent of their allotment for that week. The quantity of overshipments (the amount shipped in excess of a handler's weekly allotment) is deducted from the handler's allotment for the following week. Overshipments are not allowed during week 11 because there are no allotments the following week from which to deduct the overshipments.

If handlers fail to use their entire allotments in a given week, the amounts undershipped will not be carried forward to the following week. However, a handler to whom an allotment has been issued could lend or transfer all or part of such allotment (excluding the overshipment allowance) to another handler. In the event of a loan, each party will, prior to the completion of the loan agreement, notify the committee of the proposed loan and date of repayment. If a transfer of allotment is desired, each party will promptly notify the committee so that proper adjustments of the records could be made. In each case, the committee confirms in writing all such transactions

prior to the following week. The committee could also act on behalf of handlers wanting to arrange allotment loans or participate in the transfer of allotment. Repayment of an allotment loan is at the discretion of the handlers party to the loan.

The committee computes each handler's allotment by multiplying the handler's average week by the percentage established by regulation for that week. The committee will notify each handler prior to that particular week of the quantity of sizes 48 and 56 red seedless grapefruit such handler could handle during a particular week, making the necessary adjustments for overshipments and loan repayments.

During committee deliberations at the May 22, 1998, meeting, several concerns were raised regarding regulation. One area of concern was the way allotment base is calculated. Two members commented that the rule would not be fair to those handlers that shipped the majority of their grapefruit shipments during the 11 week period. They said that using a 33 week season as the basis for allotment was not reflective of their shipments during the regulated period, and that their allotment was not enough to cover their customer base.

The committee chose to use the past five seasons to provide the most accurate picture of an average season. When recommending procedures for establishing weekly percentage of size regulation for red seedless grapefruit, the committee discussed several methods of measuring a handler's volume to determine this base. It was decided that shipments for the five previous years and for the 33 weeks beginning the third Monday in September to the first Sunday the following May should be used for calculation purposes.

This bases allotment on a 33 week period of shipments, not just a handler's early shipments. This was done specifically to accommodate small shippers or light volume shippers, who may not have shipped much grapefruit in the early season. The use of an average week based on 33 weeks also helps adjust for variations in growing conditions that may affect when fruit matures in different seasons and growing areas. After considering different ways to calculate the average week, the committee settled on this method as the definition of prior period that provides each handler with an equitable base from which to establish shipments.

In its discussion, the committee recognized that there were concerns regarding the way base is calculated. However, committee members also stated that this type of regulation is intended to be somewhat restrictive, and providing a system that satisfies everyone is difficult, if not impossible, to achieve. There was general agreement that this method was the best option considered thus far. Another member commented that this option also provides a larger industry base than an 11 week calculation, supplying a greater amount of available base overall.

In regards to whether their allotment is enough to cover their customer base, the procedures under which this rule is recommended provide flexibility through several different options. Handlers can transfer, borrow or loan allotment based on their needs in a given week. Handlers also have the option of over shipping their allotment by 10 percent in a week, as long as the overshipment is deducted from the following week's shipments. Statistics show that in none of the regulated weeks last year was the total available allotment used. The closest it came was 83 percent of available base used. However, this still left an available allotment for loan or transfer of over 57,000 cartons. Approximately 190 loans and transfers were utilized last season. To facilitate this process, the committee staff provides a list of handler names and telephone numbers to help handlers find possible sources of allotment if needed for loan or trade. Also, this regulation only restricts shipments of small sized red grapefruit. There are no volume restrictions on larger sizes.

Another concern expressed was that the rule only covers red seedless grapefruit. One member wanted the committee to consider adding white grapefruit to the regulation. The member also asked that the committee continue to consider other possibilities on which to base regulation. The committee agreed that the provisions by which this regulation is recommended should be reviewed on a continuous basis. It was also stated that should the committee want to change § 905.153, the section outlining the procedures for setting weekly percentage of size regulation, they could consider it as part of the current meeting. No motions for change were received.

Another concern expressed was that the committee was considering meeting too often during the regulatory period to consider changing the weekly percentages. The member said that marketing plans are made further in advance than two to three weeks. The committee responded that information that is valuable in considering the appropriate percentage levels are not available until the regulatory period begins. Members agreed that it was important to meet and adjust percentages as necessary as seasonal information becomes available.

At the September 3, 1998, meeting, the concern was raised that the weekly percentages recommended were not high enough. One member expressed that they had routinely shipped all their allotment and that the weekly percentages should be higher. The committee responded that the provisions for loans, transfers, and overshipment were available to offset such problems. With the weekly percentages established, total industry allotment should exceed shipments for the majority of the 11 weeks, so that some allotment should be available for loan or transfer.

After considering the concerns expressed, and the available information, the committee determined that this rule is needed to regulate shipments of small sized red seedless grapefruit.

This rule does not affect the provision that handlers may ship up to 15 standard packed cartons (12 bushels) of fruit per day exempt from regulatory requirements. Fruit shipped in gift packages that are individually addressed and not for resale, and fruit shipped for animal feed are also exempt from handling requirements under specific conditions. Also, fruit shipped to commercial processors for conversion into canned or frozen products or into a beverage base are not subject to the handling requirements under the order.

Section 8(e) of the Act requires that whenever grade, size, quality or maturity requirements are in effect for certain commodities under a domestic marketing order, including grapefruit, imports of that commodity must meet the same or comparable requirements. This rule does not change the minimum grade and size requirements under the order, only the percentages of sizes 48 and/or 56 red grapefruit that may be handled. Therefore, no change is necessary in the grapefruit import regulations as a result of this action.

Pursuant to requirements set forth in the Regulatory Flexibility Act (RFA), the Agricultural Marketing Service (AMS) has considered the economic impact of this action on small entities. Accordingly, AMS has prepared this initial regulatory flexibility analysis.

The purpose of the RFA is to fit regulatory actions to the scale of business subject to such actions in order that small businesses will not be unduly or disproportionately burdened. Marketing orders issued pursuant to the Act, and the rules issued thereunder, are unique in that they are brought about

through group action of essentially small entities acting on their own behalf. Thus, both statutes have small entity orientation and compatibility.

There are approximately 80 grapefruit handlers subject to regulation under the order and approximately 11,000 growers of citrus in the regulated area. Small agricultural service firms, which includes handlers, have been defined by the Small Business Administration (SBA) as those having annual receipts of less than $5,000,000, and small agricultural producers are defined as those having annual receipts of less than $500,000 (13 CFR 121.601).

Based on the industry and committee data for the 1997–98 season, the average annual f.o.b. price for fresh Florida red grapefruit during the 1997–98 season was around $6.30 per 4/5 bushel cartons, and total fresh shipments for the 1997–98 season are estimated at 15.5 million cartons of red grapefruit. Approximately 20 percent of all handlers handled 60 percent of Florida grapefruit shipments. In addition, many of these handlers ship other citrus fruit and products which are not included in committee data but would contribute further to handler receipts. Using the average f.o.b. price, about 80 percent of grapefruit handlers could be considered small businesses under SBA's definition and about 20 percent of the handlers could be considered large businesses. The majority of Florida grapefruit handlers, and growers may be classified as small entities.

Under the authority of § 905.52 of the order, this rule limits the volume of small red seedless grapefruit entering the fresh market during the 11 weeks beginning the third Monday in September for the 1998–99 season. This rule utilizes the provisions of § 905.153. This rule limits the volume of sizes 48 and/or 56 red seedless grapefruit by setting the weekly percentage at 37 percent for the first seven weeks of the regulatory period (September 21 through November 8), and 32 percent for the next four weeks (November 9 through December 6). This is a change from the committees original recommendation of a 25 percent weekly percentage for each of the 11 weeks. Under this limitation, the quantity of sizes 48 and/or 56 red seedless grapefruit that may be shipped by a handler during a particular week is calculated using the established percentage.

By taking the established percentage times the average weekly volume of red grapefruit handled by such handler in the previous five seasons, the committee calculates a handler's weekly allotment of small sizes. This rule sets the weekly percentage at 37 percent for the first seven weeks (September 21 through November 8), and 32 percent for the next four weeks (November 9 through December 6) of the 11 week period. This rule should provide a supply of small sized red seedless grapefruit sufficient to meet market demand, without saturating all markets with these small sizes. This rule is necessary to help stabilize the market and improve grower returns during the early part of the season.

At the May 22, 1998, meeting, the committee recommended that the percentage for each of the 11 weeks be established at the 25 percent level. They reasoned that this percentage, when combined with the average weekly shipments for the total industry, would provide a total industry allotment of 239,243 cartons of sizes 48 and/or 56 red seedless grapefruit per regulated week. This percentage would have allowed total shipments of small red seedless grapefruit to approach the 250,000 carton mark during regulated weeks without exceeding it.

The committee met again September 3, 1998, and revisited the weekly percentage issue. The committee recommended that the weekly percentages be set at 37 percent for the first seven weeks (September 21 through November 8), and 32 percent for the next four weeks (November 9 through December 6).

The weekly percentage of 25 percent, when combined with the average weekly shipments for the total industry, would have provided a total industry allotment of nearly 250,000 cartons of sizes 48 and/or 56 red seedless grapefruit per regulated week. Based on shipments from seasons 1993–97, a total available weekly allotment of 250,000 cartons would have exceeded actual shipments for each of the first three weeks that will be regulated under this rule. In addition, if a 25 percent restriction on small sizes had been applied during the 11 week period in the three seasons prior to the 1996–97 season, an average of 4.2 percent of overall shipments during that period would have been affected. This rule will affect even fewer shipments by establishing less restrictive weekly percentages. In addition, a large percentage of this volume most likely could have been replaced by larger sizes. Under this rule a sufficient volume of small sized red grapefruit will still be allowed into all channels of trade, and allowances will be in place to help handlers address any market shortfall. Therefore, the overall impact on total seasonal shipments and on industry costs should be minimal.

The early season crop tends to have a greater percentage of small sizes. This creates a glut of smaller, lower priced fruit, driving down the price for all sizes. Early in the season, larger sized fruit commands a premium price. In some cases, the f.o.b. is $4 to $6 a carton more than for the smaller sizes. In early October, the f.o.b. for a size 27 averages around $10.00 per carton. This compares to an average f.o.b. of $5.50 per carton for size 56. By the end of the 11 week period covered in this rule, the f.o.b. for large sizes has dropped to within two dollars of the f.o.b. for small sizes.

The over shipment of smaller sized red seedless grapefruit early in the season has contributed to below production cost returns for growers and lower on tree values. An economic study done by the University of Florida—Institute of Food and Agricultural Sciences (UF–IFAS) in May 1997, found that on tree prices had fallen from a high near $7.00 in 1991–92 to around $1.50 for the 1996–97 season. The study projected that if the industry elected to make no changes, the on tree price would remain around $1.50. The study also indicated that increasing minimum size restrictions could help raise returns.

This regulation will have a positive impact on affected entities. The purpose of this rule is to help stabilize the market and improve grower returns by limiting the volume of small sizes marketed early in the season. There are no volume restrictions on larger sizes. Therefore, larger sizes could be substituted for smaller sizes with a minimum effect on overall shipments. While this rule may necessitate spot picking, which may entail slightly higher harvesting costs, many in the industry are already using the practice, and because this regulation is only in effect for part of the season, the overall effect on costs is minimal. This rule is not expected to appreciably increase costs to producers.

This rule helps limit the effects of an over supply of small sizes early in the season. A similar rule was enacted successfully last season. During the 11 week period, the regulation was successful at helping maintain prices at a higher level than the prior season, and sizes 48 and 56 by count and as a percentage of total shipments were reduced. Therefore, this action should have a positive impact on grower returns.

For the weeks when pricing information was available, last season's prices were higher in five of the six weeks when compared with f.o.b. prices from the 1996–97 season. The average

f.o.b. for these weeks was $6.28 for the 1996–97 season and $6.55 for the 1997–98 season. Last year's regulation also reduced sizes 48 and 56 as a percentage of the crop. Last season sizes 48 and 56 represented 31 percent of shipments during the 11 week regulatory period, compared to 38 percent during the previous season. There was also a 15 percent reduction in shipments of sizes 48 and 56 by count. Numbers from the month following the 11 weeks of regulation also indicate that in December 1997 the on tree price for grapefruit was $2.26 compared to $1.55 for the previous season.

The rule was also successful in reducing the steep drop in prices for larger sizes that had occurred in previous seasons. During the six weeks from mid-October through November, prices for sizes 23, 27, 32, and 36 fell by 28, 27, 21, and 20 percent, respectively, during the 1996–97 season. Prices for the same sizes during the same period last season only fell by 5, 5, 2, and 7 percent, respectively, under regulation. Prices for all sizes were firmer during this period last season when compared to the previous year, with the weighted average price dropping only 9 percent during this period last season as compared to 22 percent for the previous season.

An economic study done by Florida Citrus Mutual (Lakeland, Florida) in April 1998, found that the weekly percentage regulation had been effective. The study indicated that part of the strength in early season pricing appeared to be due to the use of the weekly percentage rule to limit the volume of sizes 48 and 56. Prices were generally higher across the size spectrum with sizes 48 and 56 having the largest gains, with larger sized grapefruit registering modest improvements. It also stated that sizes 48 and 56 grapefruit accounted for around 27 percent of domestic shipments during the 11 weeks during the 1996–97 season, compared to only 17 percent during the same period last season, as small sizes were used to supply export customers with preferences for small sized grapefruit.

Even with restrictions in place, total shipments during the 11 week period last season were higher than the previous season. There was also no noticeable drop in exports. Therefore, shipments remained strong and prices were stabilized during the regulated period.

This rule increases the weekly percentages over the percentages originally recommended at the May 22, 1998, meeting. The changes recommended by the committee at its September 3, 1998, meeting set the percentages at higher levels, and at levels comparable to last season. These percentages should allow the utilization of more small sized fruit without oversupplying the market with such fruit. During the 11 week period of weekly percentage regulation last season, the committee recommended increasing the weekly percentages to 35 percent for the majority of the 11 weeks, similar to what is being recommended for this season. Even with the weekly percentage at 35 percent, shipments of sizes 48 and 56 remained close to the 250,000 carton mark during the 11 weeks. In only 3 of the 11 weeks did the volume of sizes 48 and 56 exceed 250,000 cartons, and even then, by not more than 35,000 cartons.

Over 50 percent of red seedless grapefruit is shipped to the fresh market. Because of reduced demand and an oversupply, the processing outlet is not currently profitable. Consequently, it is essential that the market for fresh red grapefruit be fostered and maintained. Any costs associated with this action will only be for the 11 week regulatory period. However, benefits from this action could stretch throughout the entire 33 week season.

This rule is intended to stabilize the market during the early season and increase grower returns. Information available from last season suggests the regulation could do both. A stabilized price that returns a fair market value benefits both small and large growers and handlers. The opportunities and benefits of this rule are expected to be available to all red seedless grapefruit handlers and growers regardless of their size of operation.

One alternative to the actions approved was considered by the committee prior to making the recommendations at the May 22, 1998, meeting. The alternative discussed was whether to amend § 905.153 in conjunction with setting a weekly percentage. Two members suggested that the calculation used to determine a handler's allotment base should be changed from 33 weeks to a calculation that used the 11 weeks regulated by the rule. In its discussion, the committee recognized that there were concerns regarding the way base is calculated. However, committee members also stated that this type of regulation is intended to be somewhat restrictive, and providing a system that satisfies everyone is difficult, if not impossible, to achieve. There was general agreement that though this method had its concerns, it was the best option considered thus far. Therefore, the committee rejected this alternative, concluding the recommendations previously discussed were appropriate for the industry.

Another alternative action was considered at the September 3, 1998, meeting. Rather than changing all the weekly percentages, it was suggested that the committee only consider three weeks at a time in making its recommendations for change. The committee would then meet before each three week period began to consider the appropriate weekly percentages for those three weeks. The committee agreed that it was important to meet on a regular basis during the regulation period to help ensure that the weekly percentages are at the appropriate levels. However, the committee also recognized that marketing plans are made more than three weeks in advance, and that it was important to try to provide handlers with as much advance notice of their allotment of small sizes as possible. Therefore, the committee rejected this alternative.

Handlers utilizing the flexibility of the loan and transfer aspects of this action will be required to submit a form to the committee. The rule increases the reporting burden on approximately 80 handlers of red seedless grapefruit who will be taking about 0.03 hour to complete each report regarding allotment loans or transfers. The information collection requirements contained in this section have been approved by the Office of Management and Budget (OMB) under the provisions of the Paperwork Reduction Act of 1995 (Pub. L. 104–13) and assigned OMB number 0581–0094. As with all Federal marketing order programs, reports and forms are periodically reviewed to reduce information requirements and duplication by industry and public sector agencies.

The Department has not identified any relevant Federal rules that duplicate, overlap or conflict with this proposed rule. However, red seedless grapefruit must meet the requirements as specified in the U.S. Standards for Grades of Florida Grapefruit (7 CFR 51.760 through 51.784) issued under the Agricultural Marketing Act of 1946 (7 U.S.C. 1621 through 1627).

In addition, the committee's meetings were widely publicized throughout the citrus industry and all interested persons were invited to attend the meeting and participate in committee deliberations on all issues. Like all committee meetings, the May 22, 1998, meeting, and the September 3, 1998, meeting were public meetings and all entities, both large and small, were able to express views on this issue. Interested persons are invited to submit

information on the regulatory and informational impacts of this action on small businesses.

A proposed rule concerning this action was published in the **Federal Register** on Tuesday, August 11, 1998 (63 FR 42764). Copies of the rule were mailed or sent via facsimile to all committee members and to grapefruit growers and handlers. The rule was also made available through the Internet by the Office of the Federal Register.

A 20-day comment period was provided to allow interested persons to respond to the proposal. The comment period ended August 31, 1998. No comments were received.

As previously stated, subsequent to the end of the comment period, the committee met and recommended modifying its original recommendation. The committee recommended that the weekly percentages be changed from 25 percent for each of the 11 regulated weeks to 37 percent for the first seven weeks (September 21 through November 8), and 32 percent for the next four weeks (November 9 through December 6). Because of this recommendation, the Department has determined that interested parties should be provided the opportunity to comment on the changes to the original recommendation. However, the Department has further determined that extending the comment period with no percentages in effect limiting the shipments of small red seedless grapefruit when the period of regulation begins would be detrimental to the industry. Therefore, the Department is instituting the regulations on small red seedless grapefruit through this interim final rule which will allow 10 additional days to comment.

After consideration of all relevant matter presented, including the information and recommendations submitted by the committee and other available information, it is hereby found that this rule, as hereinafter set forth, will tend to effectuate the declared policy of the Act.

A 10-day comment period is provided to allow interested persons to respond to this interim final rule. Ten days is deemed appropriate because the regulation period begins on September 21, 1998, and continues for 11 weeks. Adequate time will be necessary so that any changes made to the regulations based on comments filed could be made effective during the 11-week period. All written comments timely received will be considered before a final determination is made on this matter.

Pursuant to 5 U.S.C. 553, it is also found and determined upon good cause that it is impracticable, unnecessary, and contrary to the public interest to give preliminary notice prior to putting this rule into effect and that good cause exists for not postponing the effective date of this rule until 30 days after publication in the **Federal Register** because this rule needs to be in place when the regulatory period begins on the week of September 21, 1998, and handlers begin shipping grapefruit. The committee has kept the industry well informed on this issue. It has also been widely discussed at various industry and association meetings. Interested persons have had time to determine and express their positions. In addition, these size small red grapefruit are already being harvested and handlers need to know the amount they will be allowed to ship, in order to determine harvesting quantities that will allow these increased amounts to be shipped. This rule is necessary to help stabilize the market and to improve grower returns. Further, handlers are aware of this rule, which was recommended at public meetings. Also, a 20-day comment period was provided for in the proposed rule and a 10-comment period is provided in this rule.

List of Subjects in 7 CFR Part 905

Grapefruit, Marketing agreements, Oranges, Reporting and recordkeeping requirements, Tangelos, Tangerines.

For the reasons set forth in the preamble, 7 CFR part 905 is amended as follows:

PART 905—ORANGES, GRAPEFRUIT, TANGERINES, AND TANGELOS GROWN IN FLORIDA

1. The authority citation for 7 CFR Part 905 continues to read as follows:

Authority: 7 U.S.C. 601–674.

2. A new § 905.350 is added to read as follows:

§ 905.350 Red seedless grapefruit regulation.

This section establishes the weekly percentages to be used to calculate each handler's weekly allotment of small sizes. If the minimum size in effect under § 905.306 for red seedless grapefruit is size 56, handlers can fill their allotment with size 56, size 48, or a combination of the two sizes such that the total of these shipments are within the established weekly limits. If the minimum size in effect under § 905.306 for red seedless grapefruit is 48, handlers can fill their allotment with size 48 red seedless grapefruit such that the total of these shipments are within the established weekly limits. The weekly percentages for sizes 48 and/or 56 red seedless grapefruit grown in Florida, which may be handled during the specified weeks are as follows:

Week	Weekly percentage
(a) 9/21/98 through 9/27/98	37
(b) 9/28/98 through 10/4/98	37
(c) 10/5/98 through 10/11/98	37
(d) 10/12/98 through 10/18/98 ..	37
(e) 10/19/98 through 10/25/98 ..	37
(f) 10/26/98 through 11/1/98	37
(g) 11/2/98 through 11/8/98	37
(h) 11/9/98 through 11/15/98	32
(i) 11/16/98 through 11/22/98 ...	32
(j) 11/23/98 through 11/29/98 ...	32
(k) 11/30/98 through 12/6/98	32

Dated: September 22, 1998.

Robert C. Keeney,

Deputy Administrator, Fruit and Vegetable Programs.

[FR Doc. 98–25847 Filed 9–25–98; 8:45 am]

BILLING CODE 3410–02–U

DEPARTMENT OF JUSTICE

8 CFR Part 3

28 CFR Part 0

[EOIR No. 123F; AG Order No. 2180–98]

RIN 1125–AA24

Executive Office for Immigration Review, Board of Immigration Appeals; 18 Board Members

AGENCY: Executive Office for Immigration Review, Justice.

ACTION: Final rule.

SUMMARY: This final rule expands the Board of Immigration Appeals (Board) to eighteen permanent members, including sixteen Board Members, a Chairman, and a Vice Chairman. This rule also recognizes the position of Deputy Director in the organizational hierarchy of the Executive Office for Immigration Review.

EFFECTIVE DATE: This final rule is effective September 28, 1998.

FOR FURTHER INFORMATION CONTACT: Margaret M. Philbin, General Counsel, Executive Office for Immigration Review, Suite 2400, 5107 Leesburg Pike, Falls Church, Virginia 22041, telephone: (703) 305–0470.

SUPPLEMENTARY INFORMATION: This final rule provides for an expansion of the Board of Immigration Appeals to an 18-member permanent Board. This expansion is necessary because of the Board's increasing caseload. To maintain an effective, efficient system of appellate adjudication, it has become necessary to increase the number of Board Members. This change will further enhance effective, efficient adjudication while providing for en

banc review in appropriate cases. This rule amends 8 CFR part 3 and 28 CFR part 0 to reflect the new 18-member Board. Although this rule authorizes three additional Board member positions, the Department does not anticipate filling all of these positions at the present time.

This rule also recognizes the position of Deputy Director in the organizational hierarchy of the Executive Office for Immigration Review. The Deputy Director reports directly to the Director, and may accept any delegation of authority from the Director.

Finally, the rule makes minor technical changes to 8 CFR 0.115.

Compliance with 5 U.S.C. 553 as to notice of proposed rulemaking and delayed effective date is not necessary because this rule relates to agency procedure and practice.

Regulatory Flexibility Act

In accordance with 5 U.S.C. 605(b), the Attorney General certifies that this rule does not have a significant economic impact on a substantial number of small entities.

Executive Order 12612

This regulation will not have substantial direct effects on the States, on the relationship between the national government and the States, or on distribution of power and responsibilities among the various levels of government. Therefore, in accordance with Executive Order 12612, it is determined that this rule does not have sufficient federalism implications to warrant the preparation of a Federalism Assessment.

Executive Order 12866

The Attorney General has determined that this rule is not a significant regulatory action under Executive Order No. 12866, and accordingly this rule has not been reviewed by the Office of Management and Budget.

Unfunded Mandates Reform Act of 1995

This rule will not result in the expenditure by State, local, and tribal governments, in the aggregate, or by the private sector, of $100,000,000 or more in any one year, and it will not significantly or uniquely affect small governments. Therefore, no actions were deemed necessary under the provisions of the Unfunded Mandates Reform Act of 1995.

Small Business Regulatory Enforcement Fairness Act of 1996

This rule is not a major rule as defined by the Small Business Regulatory Enforcement Fairness Act of 1996, 5 U.S.C. 804. This rule will not result in an annual effect on the economy of $100,000,000 or more; a major increase in costs or prices; or significant adverse effects on competition, employment, investment, productivity, innovation, or on the ability of United States-based companies to compete with foreign-based companies in domestic and export markets.

List of Subjects

8 CFR Part 3

Administrative practice and procedure, Immigration, Lawyers, Organizations and functions (Government agencies), Reporting and recordkeeping requirements.

28 CFR Part 0

Authority delegation (Government agencies), Government employees, Organizations and functions (Government agencies), Whistleblowing.

For the reasons set forth in the preamble, Chapter I of Title 8 of the Code of Federal Regulations and Chapter I of Title 28 of the Code of Federal Regulations are to be amended as follows:

TITLE 8—ALIENS AND NATIONALITY

PART 3—EXECUTIVE OFFICE FOR IMMIGRATION REVIEW

1. The authority citation for 8 CFR part 3 continues to read as follows:

Authority: 5 U.S.C. 301; 8 U.S.C. 1103; 1252 note, 1252b, 1362; 28 U.S.C. 509, 510, 1746; sec. 2, Reorg. Plan No. 2 of 1950, 3 CFR, 1949–1953 Comp., p. 1002.

2. In 8 CFR 3.0, revise paragraph (a) to read as follows:

§ 3.0 Executive Office for Immigration Review.

(a) *Organization.* The Executive Office for Immigration Review shall be headed by a Director who shall be assisted by a Deputy Director. The Director shall be responsible for the general supervision of the Board of Immigration Appeals and the Office of the Chief Immigration Judge in the execution of their duties in accordance with this part 3. The Director may redelegate the authority delegated to him by the Attorney General to the Deputy Director, the Chairman of the Board of Immigration Appeals, or the Chief Immigration Judge.

* * * * *

Subpart A—Board of Immigration Appeals

§ 3.1 [Amended].

3. In 8 CFR 3.1, amend paragraph (a)(1) by removing the words ''Chairman and fourteen'' in the second sentence and adding in their place the words ''Chairman, Vice Chairman, and sixteen''.

TITLE 28—JUDICIAL ADMINISTRATION

PART 0—ORGANIZATION OF THE DEPARTMENT OF JUSTICE

Subpart U—Executive Office for Immigration Review

4. The authority citation for 28 CFR part 0 continues to read as follows:

Authority: 5 U.S.C. 301; 28 U.S.C. 509, 510, 515–519.

5. In 28 CFR, revise § 0.115 to read as follows:

§ 0.115 General functions.

(a) The Executive Office for Immigration Review shall be headed by a Director who shall be assisted by a Deputy Director. The Director shall be responsible for the general supervision of the Board of Immigration Appeals, the Office of the Chief Immigration Judge, and the Office of the Chief Administrative Hearing Officer in the execution of their duties.

(b) The Director may redelegate the authority delegated to him by the Attorney General to the Deputy Director, the Chairman of the Board of Immigration Appeals, the Chief Immigration Judge, or the Chief Administrative Hearing Officer.

6. In 28 CFR, amend § 0.116 by revising the first sentence to read as follows:

§ 0.116 Board of Immigration Appeals.

The Board of Immigration Appeals shall consist of a Chairman, a Vice Chairman, and sixteen other members.

* * *

* * * * *

Dated: September 22, 1998.

Janet Reno,

Attorney General.

[FR Doc. 98–25882 Filed 9–25–98; 8:45 am]

BILLING CODE 4410–30–M

DEPARTMENT OF TRANSPORTATION

Federal Aviation Administration

14 CFR Part 39

[Docket No. 98–CE–01–AD; Amendment 39–10669; AD 98–15–18]

RIN 2120–AA64

Airworthiness Directives; Maule Aerospace Technology Corp. M–4, M–5, M–6, M–7, MX–7, and MXT–7 Series Airplanes and Models MT–7–235 and M–8–235 Airplanes; Correction

AGENCY: Federal Aviation Administration, DOT.

ACTION: Final rule; correction.

SUMMARY: This document makes a correction to Airworthiness Directive (AD) 98–15–18, which was published in the **Federal Register** on July 21, 1998 (63 FR 39018), and concerns Maule Aerospace Technology Corp. (Maule) M–4, M–5, M–6, M–7, MX–7, and MXT–7 series airplanes and Models MT–7–235 and M–8–235 airplanes. The Appendix to AD 98–15–18 incorrectly references the applicable service bulletin in two different places. All other reference in the AD is correct. The AD currently requires repetitively inspecting certain wing lift struts for internal corrosion, and replacing any wing lift strut where corrosion is found. This action corrects the AD to reflect the correct reference to the applicable service bulletin throughout the entire document.

EFFECTIVE DATE: September 9, 1998.

FOR FURTHER INFORMATION CONTACT: Cindy Lorenzen, Aerospace Engineer, FAA, Atlanta Aircraft Certification Office, One Crown Center, 1895 Phoenix Boulevard, suite 450, Atlanta, Georgia 30349; telephone: (770) 703–6078; facsimile: (770) 703–6097.

SUPPLEMENTARY INFORMATION:

Discussion

On July 14, 1998, the FAA issued AD 98–15–18, Amendment 39–10669 (63 FR 39018, July 21, 1998), which applies to certain Maule M–4, M–5, M–6, M–7, MX–7, and MXT–7 series airplanes and Models MT–7–235 and M–8–235 airplanes that are equipped with part number (P/N) 2079E rear wing lift struts and P/N 2080E front wing lift struts. This AD requires repetitively inspecting certain wing lift struts for internal corrosion, and replacing any wing lift strut where corrosion is found.

Need for the Correction

The Appendix to AD 98–15–18 incorrectly references the applicable service bulletin in two different places. All other reference in the AD is correct. As written, owners/operators of the affected airplanes, if utilizing the Appendix to AD 98–15–18, may not realize what service bulletin they would need to accomplish the actions of AD 98–15–18.

Correction of Publication

Accordingly, the publication of July 21, 1998 (63 FR 39018), of Amendment 39–10669; AD 98–15–18, which was the subject of FR Do. 96–19328, is corrected as follows:

§ 39.13 [Corrected]

On page 39021, in the second column, section 39.13, the third and fourth line of paragraph 2 of the Inspection Procedure section of the Appendix to AD 98–15–18, correct ''Piper Service Bulletin No. 528D or 910A, as applicable,'' to ''Maule Service Bulletin No. 11, dated October 30, 1995,''.

On page 39021, in the third column, section 39.13, the 16th and 17th lines of paragraph 9 of the Inspection Procedure section of the Appendix to AD 98–15–18 (the third and fourth lines from the bottom of the page), correct ''Piper Service Bulletin No. 528D or 910A.'' to ''Maule Service Bulletin No. 11, dated October 30, 1995.''

Action is taken herein to correct this reference in AD 98–15–18 and to add this AD correction to section 39.13 of the Federal Aviation Regulations (14 CFR 39.13).

The effective date remains September 9, 1998.

Issued in Kansas City, Missouri, on September 18, 1998.

Michael Gallagher,

Manager, Small Airplane Directorate, Aircraft Certification Service.

[FR Doc. 98–25775 Filed 9–24–98; 8:45 am]

BILLING CODE 4910–13–P

DEPARTMENT OF TRANSPORTATION

Federal Aviation Administration

14 CFR Part 39

[Docket No. 97–CE–57–AD; Amendment 39–10801; AD 98–20–34]

RIN 2120–AA64

Airworthiness Directives; Twin Commander Aircraft Corporation Models 500, 500–A, 500–B, 500–S, 500–U, 520, 560, 560–A, 560–E, 560–F, 680, 680–E, 680FL(P), 680T, 680V, 680W, 681, 685, 690, 690A, 690B, 690C, 690D, 695, 695A, 695B, and 720 Airplanes

AGENCY: Federal Aviation Administration, DOT.

ACTION: Final rule.

SUMMARY: This amendment adopts a new airworthiness directive (AD) that applies to Twin Commander Aircraft Corporation Models 500, 500–A, 500–B, 500–S, 500–U, 520, 560, 560–A, 560–E, 560–F, 680, 680–E, 680FL(P), 680T, 680V, 680W, 681, 685, 690, 690A, 690B, 690C, 690D, 695, 695A, 695B, and 720 airplanes. This action requires revising the FAA-approved Airplane Flight Manual (AFM) to specify procedures that would prohibit flight in severe icing conditions (as determined by certain visual cues), limit or prohibit the use of various flight control devices while in severe icing conditions, and provide the flight crew with recognition cues for, and procedures for exiting from, severe icing conditions. This AD is prompted by the results of a review of the requirements for certification of these airplanes in icing conditions, new information on the icing environment, and icing data provided currently to the flight crew. The actions specified by this AD are intended to minimize the potential hazards associated with operating these airplanes in severe icing conditions by providing more clearly defined procedures and limitations associated with such conditions.

EFFECTIVE DATE: November 3, 1998.

ADDRESSES: This information may be examined at the Federal Aviation Administration (FAA), Central Region, Office of the Regional Counsel, Attention: Rules Docket No. 97–CE–57–AD, Room 1558, 601 E. 12th Street, Kansas City, Missouri 64106.

FOR FURTHER INFORMATION CONTACT: Mr. John P. Dow, Sr., Aerospace Engineer, Small Airplane Directorate, Aircraft Certification Service, 1201 Walnut, suite 900, Kansas City, Missouri 64106, telephone (816) 426–6932, facsimile (816) 426–2169.

SUPPLEMENTARY INFORMATION:

Events Leading to the Issuance of This AD

A proposal to amend part 39 of the Federal Aviation Regulations (14 CFR part 39) to include an AD that would apply to Twin Commander Aircraft Corporation Models 500, 500–A, 500–B, 500–S, 500–U, 520, 560, 560–A, 560–E, 560–F, 680, 680–E, 680FL(P), 680T, 680V, 680W, 681, 685, 690, 690A, 690B, 690C, 690D, 695, 695A, 695B, and 720 airplanes was published in the **Federal Register** on September 16, 1997 (62 FR 48549). The action proposed to require revising the Limitations Section of the FAA-approved Airplane Flight Manual (AFM) to specify procedures that would:

• require flight crews to immediately request priority handling from Air Traffic Control to exit severe icing conditions (as determined by certain visual cues);

• prohibit flight in severe icing conditions (as determined by certain visual cues);

• prohibit use of the autopilot when ice is formed aft of the protected surfaces of the wing, or when an unusual lateral trim condition exists; and

• require that all icing wing inspection lights be operative prior to flight into known or forecast icing conditions at night.

That action also proposed to require revising the Normal Procedures Section of the FAA-approved AFM to specify procedures that would:

• limit the use of the flaps and prohibit the use of the autopilot when ice is observed forming aft of the protected surfaces of the wing, or if unusual lateral trim requirements or autopilot trim warnings are encountered; and

• provide the flight crew with recognition cues for, and procedures for exiting from, severe icing conditions.

Comments

Interested persons have been afforded an opportunity to participate in the making of this amendment. Due consideration has been given to the following comments received.

In addition to the proposed rule described previously, in September 1997, the FAA issued 24 other similar proposals that address the subject unsafe condition on various airplane models (see below for a listing of all 24 proposed rules). These 24 proposals also were published in the **Federal Register** on September 16, 1997. This final rule contains the FAA's responses to all public comments received for each of these proposed rules.

Docket No.	Manufacturer/Airplane model	Federal Register citation
97–CE–49–AD	Aerospace Technologies of Australia, Models N22B and N24A	62 FR 48520
97–CE–50–AD	Harbin Aircraft Mfg. Corporation Model Y12 IV	62 FR 48513
97–CE–51–AD	Partenavia Costruzioni Aeronauticas, S.p.A. Models, P68, AP68TP 300, AP68TP 600.	62 FR 48524
97–CE–52–AD	Industrie Aeronautiche Meccaniche Rinaldo Piaggio S.p.A. Model P–180	62 FR 48502
97–CE–53–AD	Pilatus Aircraft Ltd. Models PC–12 and PC–12/45	62 FR 48499
97–CE–54–AD	Pilatus Britten-Norman Ltd., Models BN–2A, BN–2B, and BN–2T	62 FR 48538
97–CE–55–AD	SOCATA—Groupe Aerospatiale Model TBM–700	62 FR 48506
97–CE–56–AD	Aerostar Aircraft Corporation Models PA–60–600, –601, –601P, –602P, and –700P	62 FR 48481
97–CE–57–AD	Twin Commander Aircraft Corporation Models 500, –500–A, –500–B,–500–S, –500–U, –520, –560, –560–A, –560–E, –560–F, –680, –680–E, –680FL(P), –680T, –680V, –680W, –681,–685, –690, –690A, –690B, –690C, –690D, –695, –695A, –695B, and 720.	62 FR 48549
97–CE–58–AD	Raytheon Aircraft Company Models E55, E55A, 58, 58A, 58P, 58PA, 58TC, 58TCA, 60 series, 65–B80 series, 65–B90 series, 90 series, F90 series, 100 series, 300 series, and B300 series.	62 FR 48517
97–CE–59–AD	Raytheon Aircraft Company Model 2000.	62 FR 48531
97–CE–60–AD	The New Piper Aircraft, Inc. Models PA–46–310P and PA–46–350P	62 FR 48542
97–CE–61–AD	The New Piper Aircraft, Inc. Models PA–23, PA–23–160, PA–23–235, PA–23–250, PA–E23–250, PA–30, PA–39, PA–40, PA–31, PA–31–300, PA–31–325, PA–31–350, PA–34–200, PA–34–200T, PA–34–220T, PA–42, PA–42–720, PA–42–1000.	62 FR 48546
97–CE–62–AD	Cessna Aircraft Company Models P210N, T210N, P210R, and 337 series	62 FR 48535
97–CE–63–AD	Cessna Aircraft Company Models T303, 310R, T310R, 335, 340A, 402B, 402C, 404, F406, 414, 414A, 421B, 421C, 425, and 441.	62 FR 48528
97–CE–64–AD	SIAI-Marchetti S.r.l. (Augusta) Models SF600 and SF600A	62 FR 48510
97–NM–170–AD	Cessna Aircraft Company Models 500, 501, 550, 551, and 560 series	62 FR 48560
97–NM–171–AD	Sabreliner Corporation Models 40, 60, 70, and 80 series	62 FR 48556
97–NM–172–AD	Gulfstream Aerospace Model G–159 series	62 FR 48563
97–NM–173–AD	McDonnell Douglas Models DC–3 and DC–4 series	62 FR 48553
97–NM–174–AD	Mitsubishi Heavy Industries Model YS–11 and YS–11A series	62 FR 48567
97–NM–175–AD	Frakes Aviation Model G–73 (Mallard) and G–73T series	62 FR 48577
97–NM–176–AD	Fairchild Models F27 and FH227 series	62 FR 48570
97–NM–177–AD	Lockheed L–14 and L–18 series airplanes	62 FR 48574

Comment 1. Unsubstantiated Unsafe Condition for This Model

One commenter suggests that the AD's were developed in response to a suspected contributing factor of an accident involving an airplane type unrelated to the airplanes specified in the proposal. The commenter states that these proposals do not justify that an unsafe condition exists or could develop in a product of the same type design. Therefore, the commenter asserts that the proposal does not meet the criteria for the issuance of an AD as specified 14 CFR part 39 (Airworthiness Directives) of the Federal Aviation Regulations.

The FAA does not concur. As stated in the notice of proposed rulemaking (NPRM), the FAA has identified an unsafe condition associated with operating the airplane in severe icing conditions. As stated in the preamble to the proposal, the FAA has not required that airplanes be shown to be capable of operating safely in icing conditions outside the certification envelope specified in Appendix C of part 25 of the Federal Aviation Regulations (14 CFR part 25). This means that any time an airplane is flown in icing conditions for which it is not certificated, there is a potential for an unsafe condition to exist or develop and the flight crew must take steps to exit those conditions expeditiously. Further, the FAA has determined that flight crews are not currently provided with adequate information necessary to determine when an airplane is operating in icing conditions for which it is not certificated or what action to take when such conditions are encountered. The absence of this information presents an

unsafe condition because without that information, a pilot may remain in potentially hazardous icing conditions. This AD addresses the unsafe condition by requiring AFM revisions that provide the flight crews with visual cues to determine when icing conditions have been encountered for which the airplane is not certificated, and by providing procedures to safely exit those conditions.

Further, in the preamble of the proposed rule, the FAA discussed the investigation of roll control anomalies to explain that this investigation was not a complete certification program. The testing was designed to examine only the roll handling characteristics of the airplane in certain droplets the size of freezing drizzle. The testing was not a certification test to approve the airplane for flight into freezing drizzle. The results of the tests were not used to determine if this AD is necessary, but rather to determine if design changes were needed to prevent a catastrophic roll upset. The roll control testing and the AD are two unrelated actions.

Additionally, in the preamble of the proposed rule, the FAA acknowledged that the flight crew of any airplane that is certificated for flight in icing conditions may not have adequate information concerning flight in icing conditions outside the icing envelope. However, in 1996, the FAA found that the specified unsafe condition must be addressed as a higher priority on airplanes equipped with pneumatic deicing boots and unpowered roll control systems. These airplanes were addressed first because the flight crew of an airplane having an unpowered roll control system must rely solely on physical strength to counteract roll control anomalies, whereas a roll control anomaly that occurs on an airplane having a powered roll control system need not be offset directly by the flight crew. The FAA also placed a priority on airplanes that are used in regularly scheduled passenger service. The FAA has previously issued AD's to address those airplanes. Since the issuance of those AD's, the FAA has determined that similar AD's should be issued for similarly equipped airplanes that are not used in regularly scheduled passenger service.

Comment 2. AD is Inappropriate to Address Improper Operation of the Airplane

One commenter requests that the proposed AD be withdrawn because an unsafe condition does not exist within the airplane. Rather, the commenter asserts that the unsafe condition is the improper operation of the airplane. The commenter further asserts that issuance of an AD is an inappropriate method to address improper operation of the airplane.

The FAA does not concur. The FAA has determined that an unsafe condition does exist as explained in the proposed notice and discussed previously. As specifically addressed in Amendment 39–106 of part 39 of the Federal Aviation Regulations (14 CFR part 39), the responsibilities placed on the FAA statute (49 U.S.C. 40101, formerly the Federal Aviation Act) justify allowing AD's to be issued for unsafe conditions however and wherever found, regardless of whether the unsafe condition results from maintenance, design defect, or any other reason.

This same commenter considers part 91 (rather than part 39) of the Federal Aviation Regulations (14 CFR part 91) the appropriate regulation to address the problems of icing encounters outside of the limits for which the airplane is certificated. Therefore, the commenter requests that the FAA withdraw the proposal.

The FAA does not concur. Service experience demonstrates that flight in icing conditions that is outside the icing certification envelope does occur. Apart from the visual cues provided in these final rules, there is no existing method provided to the flight crews to identify when the airplane is in a condition that exceeds the icing certification envelope. Because this lack of awareness may create an unsafe condition, the FAA has determined that it is appropriate to issue an AD to require a revision of the AFM to provide this information.

One commenter asserts that while it is prudent to advise and routinely remind the pilots about the hazards associated with flight into known or forecast icing conditions, the commenter is opposed to the use of an AD to accomplish that function. The commenter states that pilots' initial and bi-annual flight checks are the appropriate vehicles for advising the pilots of such hazards, and that such information should be integrated into the training syllabus for all pilot training.

The FAA does not concur that substituting advisory material and mandatory training for issuance of an AD is appropriate. The FAA acknowledges that, in addition to the issuance of an AD, information specified in the revision to the AFM should be integrated into the pilot training syllabus. However, the development and use of such advisory materials and training alone are not adequate to address the unsafe condition. The only method of ensuring that certain information is available to the pilot is through incorporation of the information into the Limitations Section of the AFM. The appropriate vehicle for requiring such a revision of the AFM is issuance of an AD. No change is necessary to the final rule.

Comment 3. Inadequate Visual Cues

One commenter provides qualified support for the AD. The commenter notes that the recent proposals are identical to the AD's issued about a year ago. Although the commenter supports the intent of the AD's as being appropriate and necessary, the commenter states that it is unfortunate that the flight crew is burdened with recognizing icing conditions with visual cues that are inadequate to determine certain icing conditions. The commenter points out that, for instance, side window icing (a very specific visual cue) was determined to be a valid visual cue during a series of icing tanker tests on a specific airplane; however, later testing of other models of turboprop airplanes revealed that side window icing was invalid as a visual cue for identifying icing conditions outside the scope of Appendix C.

The FAA does not concur with the commenters' request to provide more specific visual cues. The FAA finds that the value of visual cues has been substantiated during in-service experience. Additionally, the FAA finds that the combined use of the generic cues provided and the effect of the final rules in increasing the awareness of pilots concerning the hazard of operating outside of the certification icing envelope will provide an acceptable level of safety. Although all of the cues may not be exhibited on a particular model, the FAA considers that at least some of the cues will be exhibited on all of the models affected by this AD. For example, some airplanes may not have side window cues in freezing drizzle, but would exhibit other cues (such as accumulation of ice aft of the protected area) under those conditions. For these reasons, the FAA considers that no changes regarding visual cues are necessary in the final rule. However, for those operators that elect to identify airplane-specific visual cures, the FAA would consider a request for approval of an alternative method of compliance, in accordance with the provisions of this AD.

Comment 4. Request for Research and Use of Wing-Mounted Ice Detectors

One commenter requests that wing-mounted ice detectors, which provide real-time icing severity information (or immediate feedback) to flight crews, continue to be researched and used

throughout the fleet. The FAA infers from this commenter's request that the commenter asks that installation of these ice detectors be mandated by the FAA.

While the FAA supports the development of such ice detectors, the FAA does not concur that installation of these ice detectors should be required at this time. Visual cues are adequate to provide an acceptable level of safety; therefore, mandatory installation of ice detector systems, in this case, is not necessary to address the unsafe condition. Nevertheless, because such systems may improve the current level of safety, the FAA has officially tasked the Aviation Rulemaking Advisory Committee (ARAC) to develop a recommendation concerning ice detection. Once the ARAC has submitted its recommendation, the FAA may consider further rulemaking action to require installation of such equipment.

Comment 5. Particular Types of Icing

This same commenter also requests that additional information be included in paragraph (a) of the AD that would specify particular types of icing or particular accretions that result from operating in freezing precipitation. The commenter asserts that this information is of significant value to the flightcrew.

The FAA does not concur with the commenter's suggestion to specify types of icing or accretion. The FAA has determined that supercooled large droplets (SLD) can result in rime ice, mixed (intermediate) ice, and ice with glaze or clear appearance. Therefore, the FAA finds that no type of icing can be excluded from consideration during operations in freezing precipitation, and considers it unnecessary to cite those types of icing in the AD.

Comment 6. Restrictions on Use of Autopilot Could Have Adverse Impact

One commenter specifically addressed the Twin Commander 690 series airplanes. This commenter stated that the restriction against use of the autopilot in certain conditions of severe icing would have an adverse impact on certain 14 CFR part 135 single-pilot IFR operations, and thus should be revised to provide only information. Further the commenter stated it is counterproductive to and does not materially contribute to the safety of flight.

The FAA does not concur. Federal Aviation Regulation, part 135 (14 CFR part 135, section 135.103), ''Exceptions to second in command requirements: IFR operations'', addresses weather conditions that must exist in order to operate without a second in command. Federal Aviation Regulations part 135 (14 CFR part 135, section 135.105): ''Exception for second in command requirements: Approval for use of autopilot systems'', addresses certain conditions that have to be met in order to rely upon an autopilot in lieu of a second in command.

The regulation only specifies the installation of a functioning and operable autopilot that meets the operations specifications. The pilot-in-charge determines the appropriate use of the autopilot, unless mandated by other regulation, i.e., airworthiness directive. In the case of the proposed AD, the autopilot could not be used in certain conditions of severe icing. The autopilot would still be operable and would meet the operations specifications, and could then be utilized once the pilot-in-charge exited these severe icing conditions.

The regulations do not address icing conditions, and the AD does not revise or amend the above referenced sections of 14 CFR part 135. Therefore, as long as the airplane meets all the autopilot restrictions of 14 CFR 135.105 and the weather requirements of 14 CFR 135.103 are met, restricting use of the autopilot in certain icing conditions would not contradict the current regulations.

Additionally, the FAA does not concur with the commenter's statement that the masked symptoms caused by the use of autopilot in severe icing is a ''hunch''. The FAA has carefully examined data from aircraft types involved in various modes of upset in icing conditions. This data includes flight data recorder information obtained from revenue flights, flight test instrumentation, radar data, interviews with flight test pilots and review of anecdotal information on multi-engine airplanes, including the Commander 690 series airplanes.

This examination shows a reduction of aircraft control or performance is imminent and upset may occur with continued flight in severe icing conditions, and in certain infrequent cases of icing conditions within the design limits. This upset may occur without substantial natural or artificial warning in advance of aerodynamic stall, and at higher speed than without ice contamination. In these cases, there is clear and compelling evidence of three important benefits that arise from hand flying the airplane.

Benefit one is prevention. The pilot is usually able to feel the onset of adverse changes to the handling characteristics of the airplane by changes in the way the airplane responds to control input. Essentially, the airplane ''feel'' is different. The different ''feel'' or handling characteristics should alert the pilot that an immediate decrease in angle-of-attack, change in course, or altitude is needed to prevent possible upset. Some of these handling characteristics could be increased or decreased force to change the control surface position, vibration or buffeting of the control surface, or greater control surface deflection to obtain the desired airplane response.

Benefit two is reducing the severity of an upset. By disconnecting the autopilot early in a potential upset sequence, extreme trim inputs will be prevented. Delayed disconnect of the autopilot could increase the potential for cross trimmed flight controls at aerodynamic stall (most likely at higher than normal airspeeds), and may lead to a spiral spin entry, or unusual attitude. In past incidents, autopilot trim inputs reached trim surface limits prior to aerodynamic stall, complicating recovery by resulting in higher control forces that the pilot had to apply.

Benefit three is the potential for faster recovery. With ''hands-on'' the controls, the pilot is able to recover immediately should an upset occur. It is important to remember that the response characteristics of an ice contaminated airplane may differ dramatically from that of the uncontaminated airplane. Severe icing implies even more adverse changes than tested within normal icing conditions. This final rule will not change as a result of this comment.

The FAA's Determination

After careful review of all available information related to the subject presented above, the FAA has determined that air safety and the public interest require the adoption of the rule as proposed except for minor editorial corrections. The FAA has determined that these minor corrections will not change the meaning of the AD and will not add any additional burden upon the public than was already proposed.

Cost Impact

The FAA estimates that 811 airplanes in the U.S. registry will be affected by this AD, that it will take approximately 1 workhour per airplane to accomplish this action, and that the average labor rate is approximately $60 an hour. Since an owner/operator who holds at least a private pilot's certificate as authorized by sections 43.7 and 43.9 of the Federal Aviation Regulations (14 CFR 43.7 and 43.9) can accomplish this action, the only cost impact upon the public is the time it will take the affected airplane

owners/operators to incorporate this AFM revision.

The cost impact figure discussed above is based on assumptions that no operator has yet accomplished any of this requirements of this AD action, and that no operator will accomplish those actions in the future if this AD were not adopted.

In addition, the FAA recognizes that this action may impose operational costs. However, these costs are incalculable because the frequency of occurrence of the specified conditions and the associated additional flight time cannot be determined. Nevertheless, because of the severity of the unsafe condition, the FAA has determined that continued operational safety necessitates the imposition of the costs.

Regulatory Impact

The regulations adopted herein will not have substantial direct effects on the States, on the relationship between the national government and the States, or on the distribution of power and responsibilities among the various levels of government. Therefore, in accordance with Executive Order 12612, it is determined that this final rule does not have sufficient federalism implications to warrant the preparation of a Federalism Assessment.

For the reasons discussed above, I certify that this action (1) is not a ''significant regulatory action'' under Executive Order 12866; (2) is not a ''significant rule'' under DOT Regulatory Policies and Procedures (44 FR 11034, February 26, 1979); and (3) will not have a significant economic impact, positive or negative, on a substantial number of small entities under the criteria of the Regulatory Flexibility Act. A copy of the final evaluation prepared for this action is contained in the Rules Docket. A copy of it may be obtained by contacting the Rules Docket at the location provided under the caption **ADDRESSES**.

List of Subjects in 14 CFR Part 39

Air transportation, Aircraft, Aviation safety, Safety.

Adoption of the Amendment

Accordingly, pursuant to the authority delegated to me by the Administrator, the Federal Aviation Administration amends part 39 of the Federal Aviation Regulations (14 CFR part 39) as follows:

PART 39—AIRWORTHINESS DIRECTIVES

1. The authority citation for part 39 continues to read as follows:

Authority: 49 U.S.C. 106(g), 40113, 44701.

§ 39.13 [Amended]

2. Section 39.13 is amended by adding a new airworthiness directive (AD) to read as follows:

98–20–34 Twin Commander Aircraft Corporation: Amendment 39–10801; Docket No. 97–CE–57–AD.

Applicability: Models 500, –500–A, –500–B, –500–S, –500–U, –520, –560, –560–A, –560–E, –560–F, –680, –680–E, –680FL(P), –680T, –680V, –680W, –681, –685, –690, –690A, –690B, 690C, –690D, –695, –695A, –695B, and 720 airplanes (all serial numbers), certificated in any category.

Note 1: This AD applies to each airplane identified in the preceding applicability provision, regardless of whether it has been modified, altered, or repaired in the area subject to the requirements of this AD. For airplanes that have been modified, altered, or repaired so that the performance of the requirements of this AD is affected, the owner/operator must request approval for an alternative method of compliance in accordance with paragraph (d) of this AD. The request should include an assessment of the effect of the modification, alteration, or repair on the unsafe condition addressed by this AD; and, if the unsafe condition has not been eliminated, the request should include specific proposed actions to address it.

Compliance: Required as indicated, unless already accomplished.

To minimize the potential hazards associated with operating the airplane in severe icing conditions by providing more clearly defined procedures and limitations associated with such conditions, accomplish the following:

(a) Within 30 days after the effective date of this AD, accomplish the requirements of paragraphs (a)(1) and (a)(2) of this AD.

Note 2: Operators should initiate action to notify and ensure that flight crewmembers are apprised of this change.

(1) Revise the FAA-approved Airplane Flight Manual (AFM) by incorporating the following into the Limitations Section of the AFM. This may be accomplished by inserting a copy of this AD in the AFM.

''WARNING

Severe icing may result from environmental conditions outside of those for which the airplane is certificated. Flight in freezing rain, freezing drizzle, or mixed icing conditions (supercooled liquid water and ice crystals) may result in ice build-up on protected surfaces exceeding the capability of the ice protection system, or may result in ice forming aft of the protected surfaces. This ice may not be shed using the ice protection systems, and may seriously degrade the performance and controllability of the airplane.

- During flight, severe icing conditions that exceed those for which the airplane is certificated shall be determined by the following visual cues. If one or more of these visual cues exists, immediately request priority handling from Air Traffic Control to facilitate a route or an altitude change to exit the icing conditions.
- Unusually extensive ice accumulation on the airframe and windshield in areas not normally observed to collect ice.
- Accumulation of ice on the lower surface of the wing aft of the protected area.
- Accumulation of ice on the engine nacelles and propeller spinners farther aft than normally observed.
- Since the autopilot, when installed and operating, may mask tactile cues that indicate adverse changes in handling characteristics, use of the autopilot is prohibited when any of the visual cues specified above exist, or when unusual lateral trim requirements or autopilot trim warnings are encountered while the airplane is in icing conditions.
- All wing icing inspection lights must be operative prior to flight into known or forecast icing conditions at night.

[**Note:** This supersedes any relief provided by the Master Minimum Equipment List (MMEL).]''

(2) Revise the FAA-approved AFM by incorporating the following into the Normal Procedures Section of the AFM. This may be accomplished by inserting a copy of this AD in the AFM.

''THE FOLLOWING WEATHER CONDITIONS MAY BE CONDUCIVE TO SEVERE IN-FLIGHT ICING

- Visible rain at temperatures below 0 degrees Celsius ambient air temperature.
- Droplets that splash or splatter on impact at temperatures below 0 degrees Celsius ambient air temperature.

PROCEDURES FOR EXITING THE SEVERE ICING ENVIRONMENT

These procedures are applicable to all flight phases from takeoff to landing. Monitor the ambient air temperature. While severe icing may form at temperatures as cold as −18 degrees Celsius, increased vigilance is warranted at temperatures around freezing with visible moisture present. If the visual cues specified in the Limitations Section of the AFM for identifying severe icing conditions are observed, accomplish the following:

- Immediately request priority handling from Air Traffic Control to facilitate a route or an altitude change to exit the severe icing conditions in order to avoid extended exposure to flight conditions more severe than those for which the airplane has been certificated.
- Avoid abrupt and excessive maneuvering that may exacerbate control difficulties.
- Do not engage the autopilot.
- If the autopilot is engaged, hold the control wheel firmly and disengage the autopilot.
- If an unusual roll response or uncommanded roll control movement is observed, reduce the angle-of-attack.
- Do not extend flaps when holding in icing conditions. Operation with flaps extended can result in a reduced wing angle-of-attack, with the possibility of ice forming on the upper surface further aft on the wing than normal, possibly aft of the protected area.
- If the flaps are extended, do not retract them until the airframe is clear of ice.

• Report these weather conditions to Air Traffic Control.''

(b) Incorporating the AFM revisions, as required by this AD, may be performed by the owner/operator holding at least a private pilot certificate as authorized by section 43.7 of the Federal Aviation Regulations (14 CFR 43.7), and must be entered into the aircraft records showing compliance with this AD in accordance with section 43.9 of the Federal Aviation Regulations (14 CFR 43.9).

(c) Special flight permits may be issued in accordance with sections 21.197 and 21.199 of the Federal Aviation Regulations (14 CFR 21.197 and 21.199) to operate the airplane to a location where the requirements of this AD can be accomplished.

(d) An alternative method of compliance or adjustment of the compliance time that provides an equivalent level of safety may be approved by the Manager, Small Airplane Directorate, FAA, 1201 Walnut, suite 900, Kansas City, Missouri 64106. The request shall be forwarded through an appropriate FAA Maintenance Inspector, who may add comments and then send it to the Manager, Small Airplane Directorate.

Note 3: Information concerning the existence of approved alternative methods of compliance with this AD, if any, may be obtained from the Small Airplane Directorate.

(e) All persons affected by this directive may examine information related to this AD at the FAA, Central Region, Office of the Regional Counsel, Room 1558, 601 E. 12th Street, Kansas City, Missouri 64106.

(f) This amendment becomes effective on November 3, 1998.

Issued in Kansas City, Missouri, on September 18, 1998.

Michael Gallagher,

Manager, Small Airplane Directorate, Aircraft Certification Service.

[FR Doc. 98–25774 Filed 9–25–98; 8:45 am]

BILLING CODE 4910–13–P

DEPARTMENT OF TRANSPORTATION

Federal Aviation Administration

14 CFR Part 39

[Docket No. 98–ANE–07–AD; Amendment 39–10753; AD 98–19–11]

RIN 2120–AA64

Airworthiness Directives; Rolls-Royce Limited, Aero Division—Bristol/S.N.E.C.M.A. Olympus 593 Series Turbojet Engines

AGENCY: Federal Aviation Administration, DOT.

ACTION: Final rule; request for comments, withdrawal.

SUMMARY: The FAA is withdrawing the final rule; request for comments, which was published on September 16, 1998 (63 FR 49418). The reason for the withdrawal is because it is a duplicate of a final rule; request for comments, published on September 15, 1998 (63 FR 49278). The September 15, 1998, final rule, remains effective September 30, 1998. The September 15, 1998 amendment adopted a new airworthiness directive (AD) that is applicable to Rolls-Royce Limited, Aero Division—Bristol/S.N.E.C.M.A. Olympus 593 series turbojet engines.

DATES: The final rule; request for comments, published Wednesday, September 16, 1998, at 63 FR 49418, is withdrawn on September 17, 1998.

FOR FURTHER INFORMATION CONTACT: Mary Culver, Technical Publications Specialist, Engine Certification Office, FAA, Engine and Propeller Directorate, 12 New England Executive Park, Burlington, MA 01803–5299; telephone (781) 238–7125, fax (781) 238–7199.

SUPPLEMENTARY INFORMATION: The FAA is withdrawing Docket No. 98–ANE–07–AD; Amendment 39–10753; AD 98–19–11 which was published on September 16, 1998 (63 FR 49418). The reason for the withdrawal is because it is a duplicate of a final rule; request for comments, published on September 15, 1998 (63 FR 49278). The September 15, 1998, final rule that is applicable to Rolls-Royce Limited, Aero Division—Bristol/S.N.E.C.M.A. Olympus 593 series turbojet engines, remains effective September 30, 1998.

Issued in Burlington, Massachusetts, on September 17, 1998.

Kirk Gustafson,

Acting Manager, Engine and Propeller Directorate, Aircraft Certification Service.

[FR Doc. 98–25782 Filed 9–25–98; 8:45 am]

BILLING CODE 4910–13–U

DEPARTMENT OF COMMERCE

National Institute of Standards and Technology

15 CFR Part 280

[Docket No. 980623159–8238–02]

RIN 0693–AB47

Implementation of the Fastener Quality Act

AGENCY: National Institute of Standards and Technology, United States Department of Commerce.

ACTION: Final rule and extension of implementation date.

SUMMARY: Director of the National Institute of Standards and Technology (NIST), United States Department of Commerce, under authority delegated by the Secretary of Commerce, and pursuant to Pub. L. 105–234, is postponing the effect of the Fastener Quality regulation by extending its implementation date until June 1, 1999. As a service to the public, those wishing to seek registration or accreditation, or record fastener insignia may continue to do so on a purely voluntary basis under the procedures set out in the regulation.

DATES: Effective September 28, 1998.

FOR FURTHER INFORMATION CONTACT: Dr. Subhas G. Malghan, FQA Program Manager, Technology Services, National Institute of Standards and Technology, Building 820, Room 306, Gaithersburg, MD 20899, telephone number (301) 975–5120.

SUPPLEMENTARY INFORMATION:

Background

The Fastener Quality Act (the Act) protects the public safety by: (1) Requiring that certain fasteners which are sold in commerce conform to the specifications to which they are represented to be manufactured; (2) providing for accreditation of laboratories and registration of manufacturing facilities engaged in fastener testing; and (3) requiring inspection, testing and certification, in accordance with standardized methods, of fasteners covered by the Act.

The Secretary of Commerce, acting through the Director of NIST, published final regulations implementing the Act on September 26, 1996. Those regulations established procedures under which: (1) Laboratories in compliance with the Act may be listed; (2) laboratories may apply to NIST for accreditation; (3) private laboratory accreditation entities (bodies) may apply to NIST for approval to accredit laboratories; and (4) foreign laboratories accredited by their governments or by organizations recognized by the NIST Director under section 6(a)(1)(C) of the Act can be deemed to satisfy the laboratory accreditation requirements of the Act. The regulation also established, within the PTO, a recordation system to identify the manufacturers or distributors of covered fasteners to ensure that the fasteners may be traced to their manufacturers or private label distributors. in addition, the regulations contained provisions on testing and certification of fasteners, sale of fasteners subsequent to manufacture, recordkeeping, applicability of the Act, enforcement, civil penalties, and hearing and appeal procedures. The effective date of those regulations was November 25, 1996, and they were to apply to fasteners manufactured on or after May 27, 1997, the ''implementation date''.

On April 18, 1997, as permitted by Section 15 of the Act, NIST announced a one year extension of the implementation date of the regulations to May 26, 1998, because there were an insufficient number of accredited laboratories to conduct the volume of inspection and testing required by the Act and regulations (62 FR 19041 (1997)). During the one year extension, on September 8, 1997, NIST published for public comment proposed amendments to the final rule published in September 1996 (62 FR 47240 (1197)). On April 14, 1998, based on the public comments received on the September 1997 proposed rule, NIST published amendments to the September final rule (63 FR 18260 (1998)). The effective date of the April 1998 amendments to the September 1996 final rule was May 14, 1998. The April 1998 final rule established the procedures for registration of in-process inspection activities of qualifying manufacturing facilities that use Quality Assurance Systems (QAS), revised definitions and related sections for clarity , and corrected editorial errors. Pursuant to section 15 of the Act, the April 1998 final rule also extended the implementation date by sixty days, to July 26, 1998.

On June 30, 1998, NIST announced that an insufficient number of laboratories would be accredited by July 26, 1998 to perform the volume of inspection and testing required by the Act and, pursuant to section 15 of the Act, extended the implementation date to October 25, 1998.

On August 14, 1998, President Clinton signed Pub. L. 105–234, which amends the Fastener Quality Act by: (1) Creating an exemption for certain aircraft fasteners, and (2) postponing the effect of the regulations until the later of June 1, 1999 or 120 days after the Secretary of Commerce transmits to Congress a report on: (1) Changes is fastener manufacturing processes that have occurred since the enactment of the Fastener Quality Act; (b) a comparison of the Fastener Quality Act to other regulatory programs that regulate the various categories of fasteners, and an analysis of any duplication that exists among programs; and (c) any changes in that Act that may be warranted because of the changes reported under paragraphs (a) and (b). The report must be submitted to Congress by February 1, 1999.

To postpone the effect of the regulations, as mandated by Pub. L. 105–234, the Director of NIST is extending the implementation date until June 1, 1999. Before June 1, 1999, NIST will determine whether further delays are necessary. As a service to the public, those wishing to seek registration or accreditation, or record fastener insignia may continue to do so on a purely voluntary basis under the procedures set out in the regulations.

NIST is publishing technical amendments to § 280.12(a), (b), and (c), § 280.602(k), and § 280.810(c)(3)(i), introductory text, to reflect the extension.

Additional Information

Administrative Procedure Act

Pursuant to authority at 5 U.S.C. 553(b)(B), the Director of NIST has determined that good cause exists to waive the requirement to provide prior notice and an opportunity for public comment for this action as such procedures are unnecessary. The procedures are unnecessary because this action merely implements a mandatory provision of Pub. L. 105–234. The technical amendments to the existing regulations are simply meant to harmonize the existing regulations with the statutory mandate to extend the implementation date. As this action implements a provision of law already in effect, there is good cause, pursuant to 5 U.S.C. 553(d)(3) to waive the 30-day delay in effective date as such a delay is unnecessary.

Executive Order 12866

This rule has been determined not to be significant under section 3(f) of Executive Order 12866.

Regulatory Flexibility Act

Since this action is not subject to the requirement to provide prior notice and an opportunity for public comment under 5 U.S.C. 553, or any other law, it is not subject to the analytical requirements of the Regulatory Flexibility Act, 5 U.S.C. 601 et seq.

List of Subjects in 15 CFR Part 280

Business and industry, Fastener industry, Imports, Laboratories, Reporting and recordkeeping requirements.

Dated: September 18, 1998.

Robert E. Hebner,

Acting Deputy Director, National Institute of Standards and Technology.

For the reasons set forth in the preamble, Title 15 of the Code of Federal Regulations part 280 is amended as follows:

PART 280—FASTENER QUALITY

1. The authority for part 280 is revised to read as follows:

Authority: 15 U.S.C. 5401 *et seq.*; Pub. L. 105–234, 112 Stat. 1536.

2. Section 280.12(a), (b), and (c) are revised to read as follows:

§ 280.12 Applicability.

(a) The requirements of the Fastener Quality Act and this part shall be applicable only to fasteners manufactured on or after June 1, 1999.

(b) Metal manufactured prior to June 1, 1999, may not be used to manufacture fasteners subject to the Act and this part unless the metal has been tested for chemistry pursuant to § 280.15 of this part by a laboratory accredited under the Act and this part and the chemical characteristics of the metal conform to those required by the standards and specifications.

(c) Nothing in the Act and this part prohibits selling finished fasteners manufactured prior to June 1, 1999, or representing that such fasteners meet standards and specifications of a consensus standards organization or a government agency.

3. Section 280j.602(k) is revised to read as follows:

§ 280.602 Violations.

* * * * *

(k) *Sale of fasteners manufactured prior to the implementation date as compliant with the Act.* No person shall represent, sell, or offer for sale fasteners manufactured prior to June 1, 1999, as being in conformance with the Act or this part except as provided for in § 280.12(d) or (e) of this part.

* * * * *

4. Section 280.810(c)(3)(i), introductory text, is revised to read as follows:

§ 280.810 Listing of recognized accreditors, accredited registrars, and registered facilities.

* * * * *

(c) *List of facilities.* * * *

(3)(i) If a Facility intends to be listed in accordance with paragraph (c)(1) of this section but the registration process will not be completed by June 1, 1999, the Facility may be provisionally listed on the Facilities List by providing the following to NIST on or before September 30, 1998:

* * * * *

[FR Doc. 98–25565 Filed 9–25–98; 8:45 am]

BILLING CODE 3510–13–M

DEPARTMENT OF HEALTH AND HUMAN SERVICES

Food and Drug Administration

21 CFR Part 175

[Docket No. 98F–0183]

Indirect Food Additives: Adhesives and Components of Coatings

AGENCY: Food and Drug Administration, HHS.

ACTION: Final rule.

SUMMARY: The Food and Drug Administration (FDA) is amending the food additive regulations to provide for the safe use of 2-hydroxy-1-[4-(2-hydroxyethoxy)phenyl]-2-methyl-1-propanone as a photoinitiator for adhesives and pressure-sensitive adhesives intended for use in food-contact applications. This action responds to a petition filed by Ciba Specialty Chemicals Corp.

DATES: This regulation is effective September 28, 1998. Submit written objections and requests for a hearing by October 28, 1998.

ADDRESSES: Submit written objections to the Dockets Management Branch (HFA–305), Food and Drug Administration, 5630 Fishers Lane, rm. 1061, Rockville, MD 20852.

FOR FURTHER INFORMATION CONTACT: Vir D. Anand, Center for Food Safety and Applied Nutrition (HFS–215), Food and Drug Administration, 200 C St. SW., Washington, DC 20204, 202–418–3081.

SUPPLEMENTARY INFORMATION: In a notice published in the **Federal Register** of March 31, 1998 (63 FR 15425), FDA announced that a food additive petition (FAP 8B4589) had been filed by Ciba Specialty Chemicals Corp., 540 White Plains Rd., Tarrytown, NY 10591–9005. The petition proposes to amend the food additive regulations to provide for the safe use of 2-hydroxy-1-[4-(2-hydroxyethoxy)phenyl]-2-methyl-1-propanone as a photoinitiator for adhesives complying with § 175.105 *Adhesives* (21 CFR 175.105) and pressure-sensitive adhesives complying with § 175.125 *Pressure-sensitive adhesives* (21 CFR 175.125) intended for use in contact with food.

FDA has evaluated data in the petition and other relevant material. Based on this information, the agency concludes that the proposed use of the additive is safe, that the additive will achieve its intended technical effect, and therefore, that the regulations in §§ 175.105 and 175.125 should be amended as set forth below.

In accordance with § 171.1(h) (21 CFR 171.1(h)), the petition and the documents that FDA considered and relied upon in reaching its decision to approve the petition are available for inspection at the Center for Food Safety and Applied Nutrition (address above) by appointment with the information contact person listed above. As provided in § 171.1(h), the agency will delete from the documents any materials that are not available for public disclosure before making the documents available for inspection.

The agency has previously considered the environmental effects of this rule as announced in the notice of filing for FAP 8B4589 (63 FR 15425). No new information or comments have been received that would affect the agency's previous determination that there is no significant impact on the human environment and that an environmental impact statement is not required.

This final rule contains no collection of information. Therefore, clearance by the Office of Management and Budget under the Paperwork Reduction Act of 1995 is not required.

Any person who will be adversely affected by this regulation may at anytime on or before October 28, 1998, file with the Dockets Management Branch (address above) written objection thereto. Each objection shall be separately numbered, and each numbered objection shall specify with particularity the provisions of the regulation to which objection is made and the grounds for the objection. Each numbered objection on which a hearing is requested shall specifically so state. Failure to request a hearing for any particular objection shall constitute a waiver of the right to a hearing on that objection. Each numbered objection for which a hearing is requested shall include a detailed description and analysis of the specific factual information intended to be presented in support of the objection in the event that a hearing is held. Failure to include such a description and analysis for any particular objection shall constitute a waiver of the right to a hearing on the objection. Three copies of all documents shall be submitted and shall be identified with the docket number found in brackets in the heading of this document. Any objection received in response to the regulation may be seen in the Dockets Management Branch between 9 a.m. and 4 p.m., Monday through Friday.

List of Subjects in 21 CFR Part 175

Adhesives, Food additives, Food packaging.

Therefore, under the Federal Food, Drug, and Cosmetic Act and under authority delegated to the Commissioner of Food and Drugs and redelegated to the Director, Center for Food Safety and Applied Nutrition, 21 CFR part 175 is amended as follows:

PART 175—INDIRECT FOOD ADDITIVES: ADHESIVES AND COMPONENTS OF COATINGS

1. The authority citation for 21 CFR part 175 continues to read as follows:

Authority: 21 U.S.C. 321, 342, 348, 379e.

2. Section 175.105 is amended in the table in paragraph (c)(5) by alphabetically adding an entry under the headings ''Substances'' and ''Limitations'' to read as follows:

§ 175.105 Adhesives.

* * * * *

(c) * * *

(5) * * *

Substances	Limitations
* * *	* * * *
2–Hydroxy-1-[4-(2-hydroxyethoxy)phenyl]-2-methyl-1-propanone(CAS Reg. No. 106797–53–9).	For use only as a photoinitiator at a level not to exceed 5 percent by weight of the adhesive.
* * *	* * * *

3. Section 175.125 is amended by adding paragraph (a)(8) and by revising paragraph (b)(1) to read as follows:

§ 175.125 Pressure-sensitive adhesives.

* * * * *

(a) * * *

(8) 2-Hydroxy-1-[4-(2-hydroxyethoxy)phenyl]-2-methyl-1-propanone (CAS Reg. No. 106797–53–9) as a photoinitiator at a level not to exceed 5 percent by weight of the pressure-sensitive adhesive.

(b) * * *

(1) Substances listed in paragraphs (a)(1), (a)(2), (a)(3), (a)(5), (a)(6), (a)(7), and (a)(8) of this section, and those substances prescribed by paragraph (a)(4) of this section that are not identified in paragraph (b)(2) of this section.

* * * * *

Dated: September 15, 1998.

L. Robert Lake,

Director, Office of Policy, Planning and Strategic Initiatives, Center for Food Safety and Applied Nutrition.

[FR Doc. 98–25795 Filed 9–25–98; 8:45 am]

BILLING CODE 4160–01–F

ENVIRONMENTAL PROTECTION AGENCY

40 CFR Part 281

[FRL–6167–7]

Virginia; Final Approval of Underground Storage Tank Program

AGENCY: Environmental Protection Agency (EPA).

ACTION: Notice of final determination on Virginia's application for program approval.

SUMMARY: The Commonwealth of Virginia (State) has applied for approval of its underground storage tank program under Subtitle I of the Resource Conservation and Recovery Act (RCRA). The Environmental Protection Agency (EPA) has reviewed the State's application and has made a final determination that the State's underground storage tank program satisfies all of the requirements necessary to qualify for approval. Thus, EPA is granting final approval to the State to operate its program.

EFFECTIVE DATES: Program approval for Virginia shall be effective on October 28, 1998.

FOR FURTHER INFORMATION CONTACT: Rosemarie Nino, State Programs Branch, Waste & Chemicals Management Division (3WC21), U.S. EPA Region III, 1650 Arch Street, Philadelphia, Pennsylvania 19103–2029, (215) 814–3377.

SUPPLEMENTARY INFORMATION:

A. Background

Section 9004 of the Resource Conservation and Recovery Act (RCRA) authorizes EPA to approve a State's underground storage tank program to operate in the State in lieu of the Federal underground storage tank (UST) program. To qualify for approval, a State's program must be ''no less stringent'' than the Federal program in all seven elements set forth at section 9004(a)(1) through (7) of RCRA, 42 U.S.C. 6991c(a)(1) through (7), as well as the notification requirements of section 9004(a)(8) of RCRA, 42 U.S.C. 6991c(a)(8) and must provide for adequate enforcement of compliance with UST standards (section 9004(a) of RCRA, 42 U.S.C. 6991c(a)).

On July 15, 1998, the State submitted an official application for EPA approval to administer its underground storage tank program. On July 30, 1998, EPA published a tentative determination announcing its intent to approve the State's program. Further background on the tentative decision to grant approval appears at 63 FR 40683–40685, (July 30, 1998).

Along with the tentative determination, EPA announced the availability of the application for public review and comment, and the date of a tentative public hearing on the application and EPA's tentative determination. EPA requested advance notice for testimony and reserved the right to cancel the public hearing in the event of insufficient public interest. EPA did not receive any public comments and since there were no requests to hold a public hearing, it was cancelled.

B. Final Decision

I conclude that the State's application for program approval meets all of the statutory and regulatory requirements established by Subtitle I of RCRA and 40 CFR part 281. Accordingly, the State is granted approval to operate its underground storage tank program in lieu of the Federal program.

C. Compliance With Executive Order 12866

The Office of Management and Budget has exempted this action from the requirements of Section 6 of Executive Order 12866.

D. Unfunded Mandates Reform Act

Title II of the Unfunded Mandates Reform Act of 1995 (UMRA), Pub. L. 104–4, establishes requirements for Federal agencies to assess the effects of certain regulatory actions on State, local, and tribal governments and the private sector. Under sections 202 and 205 of the UMRA, EPA generally must prepare a written statement of economic and regulatory alternatives analyses for proposed and final rules with Federal mandates, as defined by the UMRA, that may result in expenditures to State, local, and tribal governments, in the aggregate, or to the private sector, of $100 million or more in any one year. The section 202 and 205 requirements do not apply to today's action because it is not a ''Federal mandate'' and because it does not impose annual costs of $100 million or more.

Today's rule contains no Federal mandates for State, local or tribal governments or the private sector for two reasons. First, today's action does not impose new or additional enforceable duties on any State, local or tribal governments or the private sector because the requirements of the State program are already imposed by the State and subject to State law. Second, the Act also generally excludes from the definition of a ''Federal mandate'' duties that arise from participation in a voluntary Federal program. A State's participation in an authorized UST program is voluntary.

Even if today's rule did contain a Federal mandate, this rule will not result in annual expenditures of $100 million or more for State, local, and/or tribal governments in the aggregate, or the private sector. Costs to State, local and/or tribal governments already exist under the State program, and today's action does not impose any additional obligations on regulated entities. In fact, EPA's approval of state programs generally may reduce, not increase, compliance costs for the private sector.

The requirements of section 203 of UMRA also do not apply to today's action. Before EPA establishes any regulatory requirements that may significantly or uniquely affect small governments, section 203 of the UMRA requires EPA to develop a small government agency plan. This rule contains no regulatory requirements that might significantly or uniquely affect small governments. The Agency recognizes that although small governments may own and/or operate USTs, they are already subject to the regulatory requirements under existing state law which are being authorized by EPA, and, thus, are not subject to any additional significant or unique requirements by virtue of this program approval.

E. Certification Under the Regulatory Flexibility Act

EPA has determined that this authorization will not have a significant economic impact on a substantial number of small entities. Such small entities which own and/or operate USTs are already subject to the regulatory requirements under existing State law which are being authorized by EPA pursuant to this Final Rule. EPA's authorization does not impose any additional burdens on these small entities; rather EPA's authorization of Virginia's UST program today simply results in an administrative change, rather than a change in the substantive requirements imposed on these small entities.

Therefore, EPA provides the following certification under the Regulatory Flexibility Act, as amended by the Small Business Regulatory Enforcement Fairness Act. Pursuant to the provision at 5 U.S.C. 605(b), I hereby certify that this authorization will not have a significant economic impact on a substantial number of small entities. This authorization approves regulatory requirements under existing State law to which small entities are already subject. It does not impose any new burdens on small entities. This rule, therefore, does not require a regulatory flexibility analysis.

F. Compliance With Executive Order 13045

Executive Order 13045 applies to any rule that the Office of Management and Budget determines is ''economically significant'' as defined under Executive Order 12866, and that EPA determines that the environmental health or safety risk addressed by the rule has a disproportionate effect on children. If the regulatory action meets both criteria, the Agency must evaluate the environmental health or safety effects of the planned rule on children and explain why the planned regulation is preferable to other potentially effective and reasonably feasible alternatives considered by the Agency.

The Agency has determined that the final rule is not a covered regulatory action as defined in the Executive Order because it is not economically significant and does not address environmental health and safety risks. As such, the final rule is not subject to the requirements of Executive Order 13045.

G. Submission to Congress and the General Accounting Office

Under 5 U.S.C. 801(a)(1)(A) as added by the Small Business Regulatory Enforcement Fairness Act of 1996, EPA submitted a report containing this rule and other required information to the U.S. Senate, the U.S. House of Representatives and the Comptroller General of the General Accounting Office prior to publication of the rule in today's **Federal Register**. This rule is not a ''major rule'' as defined by 5 U.S.C. 804(2).

List of Subjects in 40 CFR Part 281

Environmental protection, Administrative practice and procedure, Hazardous materials, State program approval, Underground storage tanks.

Authority: This document is issued under the authority of Section 9004 of the Resource Conservation and Recovery Act, as amended, 42 U.S.C. 6991c.

Dated: September 17, 1998.

Stanley L. Laskowski,

Acting Regional Administrator, Region 3.

[FR Doc. 98–25888 Filed 9–25–98; 8:45 am]

BILLING CODE 6560–50–P

ENVIRONMENTAL PROTECTION AGENCY

40 CFR Part 300

[FRL–6168–2]

National Oil and Hazardous Substances Contingency Plan; National Priorities List Update

AGENCY: Environmental Protection Agency.

ACTION: Notice of partial deletion of portions of the Sangamo Weston/Twelve Mile Creek/Lake Hartwell (Sangamo) Superfund Site from the National Priorities List.

SUMMARY: The Environmental Protection Agency (EPA) announces the partial deletion of the Sangamo site in Pickens, South Carolina from the National Priorities List (NPL). The portion to be deleted is described below. The NPL constitutes Appendix B of 40 CFR part 300 which is the National Oil and Hazardous Substances Contingency Plan (NCP), which EPA promulgated pursuant to section 105 of the Comprehensive Environmental Response, Compensation, and Liability Act of 1980 (CERCLA), as amended. EPA and the State of South Carolina have determined that all appropriate Fund-financed responses under CERCLA have been implemented on the portions of the property targeted for this partial deletion and that no further cleanup by responsible parties is appropriate. Moreover, EPA and the State of South Carolina Department of Health and Environmental Control have determined that remedial actions conducted on these portions of the property at the site to date remain protective of public health, welfare, and the environment.

EFFECTIVE DATE: September 28, 1998.

FOR FURTHER INFORMATION CONTACT: Sheri Panabaker, Remedial Project Manager, U.S. EPA, Region 4, 61 Forsyth Street, WD–NSMB, Atlanta, GA 30303, 404/562–8810.

SUPPLEMENTARY INFORMATION: The area to be deleted from the NPL is a portion of the Sangamo Superfund Site, Pickens, South Carolina. The portions to be deleted include: three of the off-site remote properties (Trotter, Nix, and Welborn), as well as unused property across Sangamo Road from the plant site. Contaminated soils were removed from the three remote sites and taken to the plant site where they were treated with all the other contaminated soils by thermal desorption. Confirmational sampling from the unused property across the street from the plant site, did not show any contamination. This partial deletion does not include all site soil actions nor the groundwater remedial action which will remain on the NPL. A Notice of Intent to Delete for this site was published in the **Federal Register** on August 17, 1998 (63 FR 43900). The closing date for comments on the Notice of Intent to Delete was September 16, 1998. EPA received no comments during this period.

The EPA identifies sites which appear to present a significant risk to public health, welfare, or the environment and it maintains the NPL as the list of those sites. Sites on the NPL may be the subject of Hazardous Substance Response Trust Fund (Fund) financed remedial actions. Any site deleted from the NPL remains eligible for fund-financed remedial actions in the unlikely event that conditions at the site warrant such action. Section 300.66(c)(8) of the NCP states that fund-financed actions may be taken at sites deleted from the NPL. Deletion of a site or a portion of a site from the NPL does not affect responsible party liability or impede agency efforts to recover cost associated with response efforts.

List of Subjects in 40 CFR Part 300

Environmental protection, Air pollution control, Chemicals, Hazardous substances, Hazardous waste, Intergovernmental relations, Penalties, Reporting and recordkeeping requirements, Superfund, Water pollution control, Water supply.

Dated: September 18, 1998.

Phyllis Hall,

Acting Deputy Regional Administrator, Region 4.

For the reasons set out in the preamble, 40 CFR part 300 is amended as follows:

PART 300—[AMENDED]

1. The authority citation for part 300 continues to read as follows:

Authority: 33 U.S.C. 1321(c) (2); 42 U.S.C. 9601–9657; E.O. 12777, 56 FR 54757, 3 CFR, 1991 Comp., 351; E.O. 12580; 52 FR 2923, 3 CFR, 1987 Comp., p. 193.

2. Table 1 of Appendix B to part 300 is amended by revising the entry for ''Sangamo Weston/Twelve-Mile/Hartwell PCB, Pickens, South Carolina'' to read as follows:

Appendix B to Part 300—National Priorities List

TABLE 1.—GENERAL SUPERFUND SECTION

State	Site name	City/County	Notes (a)
*	*	*	*
SC	Sangamo Weston/Twelve-Mile/Hartwell PCB	Pickens	P
*	*	*	*

(a) * * *
P = Sites with partial deletion(s).

* * * * *

[FR Doc. 98–25754 Filed 9–25–98; 8:45 am]

BILLING CODE 6560–50–P

ENVIRONMENTAL PROTECTION AGENCY

40 CFR Part 300

[FRL–6168–1]

National Oil and Hazardous Substances Pollution Contingency Plan; National Priorities List

AGENCY: Environmental Protection Agency (EPA).

ACTION: Notice of partial deletion of the Bypass 601 Groundwater Contamination Superfund Site, Concord, Cabarrus County, North Carolina from the National Priorities List.

SUMMARY: The EPA Region 4 announces the deletion of Source Areas 1, 2, 3, 7, 8, 9, and 10 of the Bypass 601 Groundwater Contamination Superfund Site from the National Priorities List (NPL), in Appendix B of 40 CFR part 300 which is the National Oil and Hazardous Substances Pollution Contingency Plan (NCP) which EPA promulgated pursuant to section 105 of the Comprehensive Environmental Response, Compensation, and Liability Act of 1980 (CERCLA), as amended. EPA and the State of North Carolina Department of Environment and Natural Resources have determined that Source Areas 1, 2, 3, 7, 8, 9, and 10 pose no significant threat to public health or the environment, and therefore, under the Comprehensive Environmental Response, Compensation, and Liability Act (CERCLA) further remedial measures are not appropriate. This deletion does not preclude future action under Superfund.

EFFECTIVE DATE: September 28, 1998.

FOR FURTHER INFORMATION CONTACT: Giezelle Bennett, Remedial Project Manager, U.S. Environmental Protection Agency, Region 4, North Site Management Branch, 61 Forsyth Street, S.W., Atlanta, Georgia 30303–3014, (404) 562–8824.

SUPPLEMENTARY INFORMATION: The Site affected by this partial deletion from the NPL is: Bypass 601 Groundwater Contamination Superfund Site in Cabarrus County, North Carolina.

A Notice of Intent to Partially Delete for this Site was published on August 17, 1998 (63 FR 43898). The closing date for comments on the Notice of Intent to Partially Delete was September 16, 1998. EPA received no comments.

EPA identifies sites that appear to present a significant risk to the public health, welfare, and the environment and it maintains the NPL as the list of those sites. Any site or portion thereof deleted from the NPL remains eligible for Fund-financed remedial actions in the future. Section 300.425(e)(3) of the NCP states that Fund-financed action may be taken at sites deleted from the NPL. Deletion of a site from the NPL does not affect responsible party liability or impede agency efforts to recover costs associated with response efforts.

List of Subjects in 40 CFR Part 300

Environmental protection, Air pollution control, Chemicals, Hazardous substances, Hazardous waste, Intergovernmental relations, Penalties, Reporting and recordkeeping requirements, Superfund, Water pollution control, Water supply.

Dated: September 18, 1998.

R.F. McGhee,

Acting Deputy Regional Administrator, Region 4.

For reasons set out in the preamble, 40 CFR part 300 is amended as follows:

PART 300—[AMENDED]

1. The authority citation for part 300 continues to read as follows:

Authority: 33 U.S.C. 1321(c)(2); 42 U.S.C. 9601–9657; E.O. 12777, 56 FR 54757, 3 CFR 1991 Comp., p 351; E.O. 12580, 52 FR 2923; 3 CFR, 1987 Comp., p. 193.

Appendix B [Amended]

2. Table 1 of Appendix B to part 300 is amended by revising the entry for ''Bypass 601 Ground Water Contamination, Concord, North Carolina'' to read as follows:

Appendix B to Part 300—National Priorities List

TABLE 1.—GENERAL SUPERFUND SECTION

State	Site name	City/County	Notes (a)
*	*	*	*
NC	Bypass 601 Ground Water Contamination	Concord	P

TABLE 1.—GENERAL SUPERFUND SECTION—Continued

State	Site name	City/County	Notes (a)
*	*	*	*

(a) * * *
P = Sites with partial deletion(s).

* * * * *

[FR Doc. 98–25755 Filed 9–25–98; 8:45 am]

BILLING CODE 6560–50–P

FEDERAL EMERGENCY MANAGEMENT AGENCY

44 CFR Part 64

[Docket No. FEMA–7695]

List of Communities Eligible for the Sale of Flood Insurance

AGENCY: Federal Emergency Management Agency (FEMA).

ACTION: Fina rule.

SUMMARY: This rule identifies communities participating in the National Flood Insurance Program (NFIP). These communities have applied to the program and have agreed to enact certain floodplain management measures. The communities' participation in the program authorizes the sale of flood insurance to owners of property located in the communities listed.

EFFECTIVE DATES: The dates listed in the third column of the table.

ADDRESSES: Flood insurance policies for property located in the communities listed can be obtained from any licensed property insurance agent or broker serving the eligible community, or from the NFIP at: Post Office Box 6464, Rockville, MD 20849, (800) 638–6620.

FOR FURTHER INFORMATION CONTACT: Robert F. Shea, Jr., Division Director, Program Implementation Division, Mitigation Directorate, 500 C Street SW., room 417, Washington, DC 20472, (202) 646–3619.

SUPPLEMENTARY INFORMATION: The NFIP enables property owners to purchase flood insurance which is generally not otherwise available. In return, communities agree to adopt and administer local floodplain management measures aimed at protecting lives and new construction from future flooding. Since the communities on the attached list have recently entered the NFIP, subsidized flood insurance is now available for property in the community.

In addition, the Associate Director of the Federal Emergency Management Agency has identified the special flood hazard areas in some of these communities by publishing a Flood Hazard Boundary Map (FHBM) or Flood Insurance Rate Map (FIRM). The date of the flood map, if one has been published, is indicated in the fourth column of the table. In the communities listed where a flood map has been published, Section 102 of the Flood Disaster Protection Act of 1973, as amended, 42 U.S.C. 4012(a), requires the purchase of flood insurance as a condition of Federal or federally related financial assistance for acquisition or construction of buildings in the special flood hazard areas shown on the map.

The Associate Director finds that the delayed effective dates would be contrary to the public interest. The Associate Director also finds that notice and public procedure under 5 U.S.C. 553(b) are impracticable and unnecessary.

National Environmental Policy Act

This rule is categorically excluded from the requirements of 44 CFR Part 10, Environmental Considerations. No environmental impact assessment has been prepared.

Regulatory Flexibility Act

The Associate Director certifies that this rule will not have a significant economic impact on a substantial number of small entities in accordance with the Regulatory Flexibility Act, 5 U.S.C. 601, *et seq.*, because the rule creates no additional burden, but lists those communities eligible for the sale of flood insurance.

Regulatory Classification

This final rule is not a significant regulatory action under the criteria of section 3(f) of Executive Order 12866 of September 30, 1993, Regulatory Planning and Review, 58 FR 51735.

Paperwork Reduction Act

This rule does not involve any collection of information for purposes of the Paperwork Reduction Act, 44 U.S.C. 3501 *et seq.*

Executive Order 12612, Federalism

This rule involves no policies that have federalism implications under Executive Order 12612, Federalism, October 26, 1987, 3 CFR, 1987 Comp., p. 252.

Executive Order 12778, Civil Justice Reform

This rule meets the applicable standards of section 2(b)(2) of Executive Order 12778, October 25, 1991, 56 FR 55195, 3 CFR, 1991 Comp., p. 309.

List of Subjects in 44 CFR Part 64

Flood insurance, Floodplains.

Accordingly, 44 CFR part 64 is amended as follows:

PART 64—[AMENDED]

1. The authority citation for Part 64 continues to read as follows:

Authority: 42 U.S.C. 4001 *et seq.*, Reorganization Plan No. 3 of 1978, 3 CFR, 1978 Comp., p. 329; E.O. 12127, 44 FR 19367, 3 CFR, 1979 Comp., p. 376.

§ 64.6 [Amended]

2. The tables published under the authority of § 64.6 are amended as follows:

State/location	Community No.	Effective date of eligibility	Current effective map date
New Eligibles—Emergency Program			
Iowa: Battle Creek, city of, Ida County	190423	July 8, 1998	September 26, 1975.
Georgia: Buckhead, town of, Morgan County	130364	July 9, 1998	July 11, 1975.
Nebraska: Denton, village of, Lancaster County	310498	.....do	
North Carolina: Rose Hill, town of, Duplin County	370375	.....do	
Colorado: Phillips County, unincorporated areas	080286	July 24, 1998	
Tennessee: Coffee County, unincorporated areas	470355	.....do	August 5, 1977.

State/location	Community No.	Effective date of eligibility	Current effective map date
Iowa: Walcott, city of, Scott County	190675	July 29, 1998	July 9, 1976.
Ohio: New Concord, village of, Muskingum County	390847	.....do	September 8, 1978.
New Eligibles—Regular Program			
Georgia: Dodge County, unincorporated areas	130523	July 9, 1998	September 20, 1996.
Nebraska: Clay Center, city of, Clay County	310040	July 29, 1998	NSFHA.
Reinstatements			
New York:			
Conewango, town of, Cattaraugus County	360065	January 4, 1976, Emerg; July 30, 1982, Reg; November 4, 1992, Susp; July 11, 1998, Rein.	July 30, 1982.
Columbia, town of, Herkimer County	360299	May 21, 1976, Emerg; July 16, 1982, Reg; November 4, 1992, Susp; July 24, 1998, Rein.	September 18, 1985.
Vermont: Tunbridge, town of, Orange County	500076	July 25, 1975, Emerg; September 18, 1985, Reg; September 18, 1985, Susp; July 24, 1998, Rein.	Do.
Virginia: Onancock, town of, Accomack County	510298	February 17, 1976, Emerg; December 15, 1981, Reg; December 15, 1981, Susp; July 24, 1998, Rein.	December 15, 1981.
Regular Program Conversions			
Region I			
Maine: Dresden, town of, Lincoln County	230084	July 6, 1998, Suspension Withdrawn.	July 6, 1998.
New Hampshire: Hebron, town of, Grafton County	330058	.....do	Do.
Region IV			
Tennessee: Oak Ridge, city of, Anderson and Roane Counties.	475441	.....do	Do.
Region V			
Illinois			
Dixon, city of, Lee County	170417	.....do	Do.
Lee County, unincorporated areas	170413	.....do	Do.
Region VI			
Arkansas:			
Bigelow, town of, Perry County	050387	.....do	Do.
Casa, city of, Perry County	050395	.....do	Do.
Houston, town of, Perry County	050257	.....do	Do.
Perry, town of, Perry County	050276	.....do	Do.
Region I			
Maine:			
Harpswell, town of, Cumberland County	230169	July 20, 1998, Suspension Withdrawn	July 20, 1998.
Phippsburg, town of, Sagadahoc County	230120	.....do	Do.
Sanford, town of, York County	230156	.....do	Do.
Rhode Island: Portsmouth, town of, Newport County	445405	.....do	Do.
Region II			
New Jersey: North Wildwood, city of, Cape May County.	345308	.....do	Do.
New York:			
Manorhaven, village of, Nassau County	360479	.....do	Do.
North Hempstead, town of, Nassau County	360482	.....do	Do.
Port Washington North, village of, Nassau County.	361562	.....do	Do.
Sands Point, village of, Nassau County	360492	.....do	Do.
Virgin Islands: St. Croix	780000	.....do	Do.
Region III			
Maryland: Somerset County, unincorporated areas	240061	.....do	Do.
Virginia:			
Northumberland County, unincorporated areas	510107	.....do	Do.
Richmond, independent city	510129	.....do	Do.
Region IV			
Florida:			
Collier County, unincorporated areas	120067	.....do	Do.
Santa Rosa County, unincorporated areas	120274	.....do	Do.
North Carolina: Alexander County, unincorporated areas.	370398	.....do	Do.
Region VI			
Arkansas: Pulaski County, unincorporated areas	050179	.....do	Do.
Region VII			
Missouri: Franklin, city of, Howard County	290482	.....do	Do.

State/location	Community No.	Effective date of eligibility	Current effective map date
Region VII			
Wyoming: Rock Springs, city of, Sweetwater County	560051	.....do	Do.
Region X			
Idaho:			
Bellevue, city of, Blaine County	160021	.....do	Do.
Blaine County, unincorporated areas	165167	.....do	Do.

Code for reading third column: Emerg.—Emergency; Reg.—Regular; Rein.—Reinstatement; Susp.—Suspension; With.—Withdrawn; NSFHA—Non Special Flood Hazard Area.

(Catalog of Federal Domestic Assistance No. 83.100, ''Flood Insurance'')

Issued: August 27, 1998.

Michael J. Armstrong,

Associate Director for Mitigation.

[FR Doc. 98–24154 Filed 9–25–98; 8:45 am]

BILLING CODE 6718–05–M

NATIONAL COMMISSION ON LIBRARIES AND INFORMATION SCIENCE

45 CFR Part 1700

Organization and Functions

AGENCY: National Commission on Libraries and Information Science (NCLIS).

ACTION: Final rule.

SUMMARY: This is a final rule, making technical revisions and reissuing regulations describing the organization and functions of the National Commission on Libraries and Information Science (NCLIS). The revision incorporates changes in the statute governing the Commission and other editorial changes to make the regulations more accurately reflect the current organization and functions of the Commission. These regulations affect NCLIS Commissioners and staff.

EFFECTIVE DATE: September 28, 1998.

FOR FURTHER INFORMATION CONTACT: Judith C. Russell, NCLIS Deputy Director, 1110 Vermont Avenue, NW, Suite 820, Washington, DC 20005, (202) 606–9200 or jr__nclis@inet.ed.gov. Individuals who use a telecommunications device for the deaf (TDD) may call the Federal Information Relay Service (FIRS) at (800) 877–8339 between 8 a.m. and 8 p.m., Eastern time, Monday through Friday.

SUPPLEMENTARY INFORMATION: The National Commission on Libraries and Information Science (NCLIS) was created on July 20, 1970, by the National Commission on Libraries and Information Science Act (20 U.S.C. 1501 *et seq.*) as an independent agency within the Executive branch. This rule describes the organization and functions of the Commission.

The regulations governing the Commission currently published at 45 CFR part 1700 have not been updated for many years. The regulations are revised and reissued to incorporate changes in the statute governing the Commission as well as other editorial changes to make the regulations more accurately reflect the current organization and functions of the Commission.

NCLIS considers this rule to be a procedural rule that is exempt from notice and comment under 5 U.S.C. 533(b)(3)(A). This rule is not a significant rule for purposes of Executive Order 12866 and has not been reviewed by the Office of Management and Budget (OMB). This final rule does not impose any reporting requirements or recordkeeping requirements subject to the Paperwork Reduction Act.

List of Subjects in 45 CFR Part 1700

Authority delegations (Government agencies), Organization and functions (Government agencies).

Accordingly, 45 CFR part 1700 is revised to read as follows:

PART 1700—ORGANIZATION AND FUNCTIONS

Sec.

1700.1 Purpose.
1700.2 Functions.
1700.3 Membership.
1700.4 Chairperson.
1700.5 Executive Director.

Authority: 5 U.S.C. 552; 20 U.S.C. 1501 *et seq.*

§ 1700.1 Purpose.

The National Commission on Libraries and Information Science (NCLIS):

(a) Advises the President and the Congress on library and information services adequate to meet the needs of the people of the United States;

(b) Advises Federal, State, and local governments, and other public and private organizations regarding library services and information science, including consultations on relevant treaties, international agreements, and implementing legislation; and

(c) Promotes research and development activities to extend and improve the nation's library and information handling capabilities as essential links in national and international networks.

§ 1700.2 Functions.

The Commission's functions include the following:

(a) Developing and recommending overall plans for library and information services adequate to meet the needs of the people of the United States;

(b) Coordinating, at the Federal, State and local levels, implementation of the plans referred to in paragraph (a) of this section and related activities;

(c) Conducting studies, surveys and analyses of, and hearings on, the library and informational needs of the Nation, including the special needs of rural areas, economically, socially or culturally deprived persons and the elderly;

(d) Evaluating the means by which the needs referred to in paragraph (c) of this section may be met through the establishment or improvement of information centers and libraries;

(e) Appraising the adequacies and deficiencies of current library and information resources and services; and

(f) Evaluating current library and information science programs.

§ 1700.3 Membership.

(a) The Commission is composed of the Librarian of Congress, the Director of the Institute of Museum and Library Services (who serves as an ex officio, nonvoting member), and 14 members appointed by the President, by and with the advice and consent of the Senate.

(b) The President designates one of the members of the Commission as the Chairperson.

§ 1700.4 Chairperson.

(a) To facilitate its work, the Commission from time to time delegates to the Chairperson various duties and responsibilities.

(b) The Commission records formal delegation of the duties and

responsibilities referred to in paragraph (a) of this section in resolutions and in the minutes of its meetings.

(c) The Chairperson may delegate the duties and responsibilities referred to in paragraph (a) of this section, as necessary, to other Commissioners or the Executive Director of the Commission.

§ 1700.5 Executive Director.

(a) The Executive Director serves as the administrative and technical head of the Commission staff, directly responsible for managing its day-to-day operations and assuring that Commission operations conform to all applicable Federal laws.

(b) The Executive Director is directly responsible to the Commission, works under the general direction of the Chairperson, and assists the Chairperson in carrying out the Commission's organizational and administrative responsibilities.

(c) The Executive Director acts as the principal staff advisor to the Chairperson and Commissioners, participating with the Commissioners in the development, recommendation and implementation of overall plans and policies to achieve the Commission's goals.

(d) To facilitate its work, the Commission from time to time delegates to the Executive Director various duties and responsibilities.

(e) The Commission records formal delegation of the duties and responsibilities referred to in paragraph (d) of this section in resolutions and in the minutes of its meetings.

(f) The Executive Director may delegate the duties and responsibilities referred to in paragraph (d) of this section, as necessary, to other members of the Commission staff.

Dated: September 22, 1998.

Robert S. Willard,

Executive Director.

[FR Doc. 98–25765 Filed 9–25–98; 8:45 am]

BILLING CODE 7527–01–P

DEPARTMENT OF TRANSPORTATION

National Highway Traffic Safety Administration

49 CFR Part 593

[Docket No. NHTSA–98–4449]

RIN 2127–AH28

List of Nonconforming Vehicles Decided to be Eligible for Importation

AGENCY: National Highway Traffic Safety Administration (NHTSA), DOT.

ACTION: Final rule.

SUMMARY: This document revises the list of vehicles not originally manufactured to conform to the Federal motor vehicle safety standards that NHTSA has decided to be eligible for importation. This list is contained in an appendix to the agency's regulations that prescribe procedures for import eligibility decisions. The revised list includes all vehicles that NHTSA has decided to be eligible for importation since October 1, 1997. NHTSA is required by statute to publish this list annually in the **Federal Register**.

DATES: The revised list of import eligible vehicles (appendix A to Part 593) is effective September 28, 1998.

FOR FURTHER INFORMATION CONTACT: George Entwistle, Office of Vehicle Safety Compliance, NHTSA (202–366–5306).

SUPPLEMENTARY INFORMATION: Under 49 U.S.C. § 30141(a)(1)(A), a motor vehicle that was not originally manufactured to conform to all applicable Federal motor vehicle safety standards shall be refused admission into the United States unless NHTSA has decided that the motor vehicle is substantially similar to a motor vehicle originally manufactured for importation into and sale in the United States, certified under 49 U.S.C. § 30115, and of the same model year as the model of the motor vehicle to be compared, and is capable of being readily altered to conform to all applicable Federal motor vehicle safety standards. Where there is no substantially similar U.S.-certified motor vehicle, 49 U.S.C. § 30141(a)(1)(B) permits a nonconforming motor vehicle to be admitted into the United States if its safety features comply with, or are capable of being altered to comply with, all applicable Federal motor vehicle safety standards based on destructive test data or such other evidence as the Secretary of Transportation decides to be adequate.

Under 49 U.S.C. § 30141(a)(1), import eligibility decisions may be made ''on the initiative of the Secretary of Transportation or on petition of a manufacturer or importer registered under [49 U.S.C. § 30141(c)].'' The Secretary's authority to make these decisions has been delegated to NHTSA. The agency publishes notice of eligibility decisions as they are made.

Under 49 U.S.C. § 30141(b)(2), a list of all vehicles for which import eligibility decisions have been made must be published annually in the **Federal Register**. On October 1, 1996, NHTSA added the list as an appendix to 49 CFR Part 593, the regulations that establish procedures for import eligibility decisions (61 FR 51242). As described in the notice, NHTSA took that action to ensure that the list is more widely disseminated to government personnel who oversee vehicle imports and to interested members of the public. See 61 FR 51242–43. In the notice, NHTSA expressed its intention to annually revise the list as published in the appendix to include any additional vehicles decided by the agency to be eligible for importation since the list was last published. See 61 FR 51243. The agency stated that issuance of the document announcing these revisions will fulfill the annual publication requirements of 49 U.S.C. 30141(b)(2). *Ibid.*

Rulemaking Analyses and Notices

1. Executive Order 12866 (Federal Regulatory Planning and Review) and DOT Regulatory Policies and Procedures

This rulemaking action was not reviewed under E.O. 12866. NHTSA has analyzed this rulemaking action and determined that it is not ''significant'' within the meaning of the Department of Transportation's regulatory policies and procedures.

2. Regulatory Flexibility Act

In accordance with the Regulatory Flexibility Act, NHTSA has evaluated the effects of this action on small entities. Based upon this evaluation, I certify that the revisions resulting from this rulemaking will not have a significant economic impact on a substantial number of small entities. Accordingly, the agency has not prepared a regulatory flexibility analysis.

Because this rulemaking does not impose any regulatory requirements, but merely furnishes information by revising the list in the Code of Federal Regulations of vehicles for which import eligibility decisions have been made, it has no economic impact.

3. Executive Order 12612 (Federalism)

This action has been analyzed in accordance with the principles and criteria contained in Executive Order 12612, and it has been determined that this rule does not have sufficient Federalism implications to warrant preparation of a Federalism Assessment. No State laws will be affected.

4. National Environmental Policy Act

The agency has considered the environmental implications of this rule in accordance with the National Environmental Policy Act of 1969 and determined that it will not significantly affect the human environment.

5. Paperwork Reduction Act

In accordance with the Paperwork Reduction Act of 1980, P.L. 96–511, the agency notes that there are no information collection requirements associated with this rulemaking action.

6. Civil Justice Reform

This rule does not have any retroactive effect. It does not repeal or modify any existing Federal regulations. A petition for reconsideration or other administrative proceeding will not be a prerequisite to an action seeking judicial review of this rule. This rule does not preempt the states from adopting laws or regulations on the same subject, except that it will preempt a state regulation that is in actual conflict with the Federal regulation or makes compliance with the Federal regulation impossible or interferes with the implementation of the Federal statute.

7. Notice and Comment

NHTSA finds that prior notice and opportunity for comment are unnecessary under 5 U.S.C. 553(b)(3)(B) because this action does not impose any regulatory requirements, but merely revises the list of vehicles not originally manufactured to conform to the Federal motor vehicle safety standards that NHTSA has decided to be eligible for importation into the United States to include all vehicles for which such decisions have been made since October 1, 1997.

In addition, so that the list of vehicles for which import eligibility decisions have been made may be included in the next edition of 49 CFR Parts 400 to 999, which is due for revision on October 1, 1998, good cause exists to dispense with the requirement in 5 U.S.C. § 553(d) for the effective date of the rule to be delayed for at least 30 days following its publication.

List of Subjects in 49 CFR Part 593

Imports, Motor vehicle safety, Motor vehicles.

In consideration of the foregoing, Part 593 of Title 49 of the Code of Federal Regulations, Determinations that a vehicle not originally manufactured to conform to the Federal Motor Vehicle Safety Standards is eligible for importation, is amended as follows:

PART 593—[AMENDED]

1. The authority citation for Part 593 continues to read as follows:

Authority: 49 U.S.C. 322 and 30141(b); delegation of authority at 49 CFR 1.50.

2. Appendix A to Part 593 is revised to read as follows:

Appendix A to Part 593—List of Vehicles Determined to be Eligible for Importation

Each vehicle on the following list is preceded by a vehicle eligibility number. The importer of a vehicle admissible under any eligibility decision must enter that number on the HS–7 Declaration Form accompanying entry to indicate that the vehicle is eligible for importation.

''VSA'' eligibility numbers are assigned to all vehicles that are decided to be eligible for importation on the initiative of the Administrator under § 593.8.

''VSP'' eligibility numbers are assigned to vehicles that are decided to be eligible under § 593.7(f), based on a petition from a manufacturer or registered importer submitted under § 593.5(a)(1), which establishes that a substantially similar U.S.-certified vehicle exists.

''VCP'' eligibility numbers are assigned to vehicles that are decided to be eligible under § 593.7(f), based on a petition from a manufacturer or registered importer submitted under § 593.5(a)(2), which establishes that the vehicle has safety features that comply with, or are capable of being altered to comply with, all applicable Federal motor vehicle safety standards.

Vehicles for which eligibility decisions have been made are listed alphabetically by make, with the exception of Mercedes-Benz vehicles, which appear at the end of the list. Eligible models within each make are listed numerically by ''VSA,'' ''VSP,'' or ''VCP'' number.

All hyphens used in the Model Year column mean ''through'' (for example, ''1973–1989'' means ''1973 through 1989'').

The initials ''MC'' used in the Manufacturer column mean ''motorcycle.''

The initials ''SWB'' used in the Model Type column mean ''Short Wheel Base.''

The initials ''LWB'' used in the Model Type column mean ''Long Wheel Base.''

VEHICLES CERTIFIED BY THEIR ORIGINAL MANUFACTURER AS COMPLYING WITH ALL APPLICABLE CANADIAN MOTOR VEHICLE SAFETY STANDARDS

Number	Vehicles
VSA–80	(a) All passenger cars less than 25 years old that were manufactured before September 1, 1989. (b) All passenger cars manufactured on or after September 1, 1989, and before September 1, 1996, that, as originally manufactured, are equipped with an automatic restraint system that complies with Federal Motor Vehicle Safety Standard (FMVSS) No. 208. (c) All passenger cars manufactured on or after September 1, 1996 and before September 1, 2002, that, as originally manufactured, are equipped with an automatic restraint system that complies with FMVSS No. 208, and that comply with FMVSS No. 214.
VSA–81	(a) All multipurpose passenger vehicles, trucks, and buses with a GVWR of 4536 kg. (10,000 lbs.) or less that are less than 25 years old and that were manufactured before September 1, 1991. (b) All multipurpose passenger vehicles, trucks, and buses with a GVWR of 4536 kg. (10,000 lbs.) or less that were manufactured on or after September 1, 1991, and before September 1, 1993, and that, as originally manufactured, comply with FMVSS Nos. 202 and 208. (c) All multipurpose passenger vehicles, trucks and buses with a GVWR of 4536 kg. (10,000 lbs.) or less that were manufactured on or after September 1, 1993, and before September 1, 1998, and that, as originally manufactured, comply with FMVSS Nos. 202, 208, and 216. (d) All multipurpose passenger vehicles, trucks and buses with a GVWR of 4536 kg. (10,000 lbs.) or less, that were manufactured on or after September 1, 1998, and before September 1, 2002, and that, as originally manufactured, comply with the requirements of FMVSS Nos. 202, 208, 214, and 216.
VSA–82	All multipurpose passenger vehicles, trucks and buses with a GVWR greater than 4536 kg. (10,000 lbs.) that are less than 25 years old.
VSA–83	All trailers, and all motorcycles that are less than 25 years old.

VEHICLES MANUFACTURED FOR OTHER THAN THE CANADIAN MARKET

Manufacturer	VSP	VSA	VCP	Model type	Model ID	Model year
Acura	51			Legend		1988
Acura	77			Legend		1989
Alfa Romeo	196			164		1989
Alfa Romeo	76			164		1991
Alfa Romeo	156			164		1994
Alfa Romeo	234			GTV		1974
Alfa Romeo	124			GTV		1985
Alfa Romeo	70			Spider		1987
Aston Martin	123			Volante		1990–1991
Audi	93			100		1989
Audi	244			100		1993
Audi	160			200 Quattro		1987
Audi	223			80		1988–1989
Audi	238			Avant Quattro		1996
BMW		3		2002		1974–1976
BMW		7		2002A		1974–1976
BMW		10		2002Tii		1974
BMW	248			3 Series		1995–1997
BMW		12		3.0CSi and 3.0CSiA		1974
BMW		13		3.0S and 3.0SA		1974
BMW		14		3.0Si and 3.0SiA		1975
BMW		66		316		1978–1982
BMW	25			316		1986
BMW		23		318i and 318iA		1981–1989
BMW		16		320, 320i, and 320iA		1976–1985
BMW		67		323i		1978–1985
BMW		30		325, 325i, 325iA, and 325E		1985–1989
BMW		31		325 is and 325isA		1987–1989
BMW		24		325e and 325eA		1984–1987
BMW	96			325i		1991
BMW	197			325i		1992–1996
BMW	205			325iX		1990
BMW		33		325iX and 325iXA		1988–1989
BMW	194			5 Series		1990–1995
BMW	249			5 Series		1996–1997
BMW	4			518i		1986
BMW		68		520 and 520i		1978–1983
BMW	9			520iA		1989
BMW		26		524tdA		1985–1986
BMW		69		525 and 525i		1979–1982
BMW	5			525i		1989
BMW		21		528e and 528eA		1982–1988
BMW		20		528i and 528iA		1979–1984
BMW		15		530i and 530iA		1975–1978
BMW		22		533i and 533iA		1983–1984
BMW		25		535i and 535iA		1985–1989
BMW	15			625CSi		1981
BMW	32			628CSi		1980
BMW		17		630CSi 630CSiA		1977
BMW		18		633CSi and 633CSiA		1977–1984
BMW		27		635, 635CSi, and 635CSiA		1979–1989
BMW	232			7 Series		1992
BMW		70		728 and 728i		1977–1985
BMW	14			728i		1986

BMW		71		730, 730i, and 730iA		1978–1980
BMW	24			730i		1991
BMW	57			730i		1993
BMW	131			730i		1994–1995
BMW	6			730iA		1988
BMW		72		732i		1980–1984
BMW		19		733i and 733iA		1977–1984
BMW		28		735, 735i, and 735iA		1980–1989
BMW	146			735iL		1991
BMW		73		745i		1980–1986
BMW	91			750iL		1990
BMW	81			750iL		1991
BMW	221			750iL		1992, 1994–1997
BMW	41			750iL		1993
BMW	99			840Ci		1993
BMW	10			850i		1991
BMW	55			850i		1993
BMW		78		All other models except those in the M1 and Z1 series.		1974–1989
BMW		29		L7		1986–1987
BMW		35		M3		1988–1989
BMW		34		M5		1988
BMW		32		M6		1987–1988
BMW	260			Z3		1996–1998
BMW MC	228			K1		1990–1993
BMW MC	229			K75S		1987–1995
BMW MC	58			R100S		1977
BMW MC	231			R1100		1994–1997
BMW MC	177			R1100RS		1994
BMW MC	30			R75/6		1974
Bristol Bus			10	VRT Bus—Double Decker		1974–1976
Bristol Bus			4	VRT Bus—Double Decker		1977
Bristol Bus			2	VRT Bus—Double Decker		1978–1981
Chevrolet	150			400SS		1995
Chevrolet	242			Suburban		1989–1991
Chrysler	216			Shadow		1989
Citroen			1	XM		1990–1992
Dodge	135			Ram		1994–1995
Ducati MC	241			600SS		1992–1996
Ducati MC	220			748 Biposto		1996–1997
Ducati MC	201			900SS		1990–1996
Ferrari		76		208, 208 Turbo (all models)		1974–1988
Ferrari		36		308 (all models)		1974–1985
Ferrari		37		328 (except GTS)		1985, 1988–1989
Ferrari		37		328 GTS		1985–1989
Ferrari	86			348 TB		1992
Ferrari	161			348 TS		1992
Ferrari	256			456		1995
Ferrari	173			512 TR		1993
Ferrari	259			F355		1995
Ferrari	226			F50		1995
Ferrari		38		GTO		1985
Ferrari		74		Mondial (all models)		1980–1989
Ferrari		39		Testarossa		1987–1989
Ford	265			Bronco		1995–1996
Ford			9	Escort RS		1994–1995
Ford	250			Windstar		1995–1998
Freightliner	179			FLD12064ST		1991–1996
Freightliner	178			FTLD112064SD		1991–1996

VEHICLES MANUFACTURED FOR OTHER THAN THE CANADIAN MARKET—Continued

Manufacturer	VSP	VSA	VCP	Model type	Model ID	Model year
GMC	134			Suburban		1992–1994
Harley–Davidson	202			FX, FL, XL series		1974–1997
Harley Davidson	253			FX, FL, XL series		1998
Hobson			8	Horse Trailer		1985
Honda	128			Civic DX		1989
Honda	191			Prelude		1989
Honda MC	106			CB1000F		1988
Honda MC	174			CP450SC		1986
Honda MC	34			VFR750		1990
Jaguar	78			Sovereign		1993
Jaguar		41		XJ6		1974–1986
Jaguar	47			XJ6		1987
Jaguar	215			XJ6 Sovereign		1988
Jaguar		40		XJS		1980–1987
Jaguar	175			XJS		1991
Jaguar	129			XJS		1992
Jaguar	195			XJS		1994–1996
Daimler	12			Limousine		1985
Jeep	211			Cherokee		1991
Jeep	164			Cherokee		1992
Jeep	254			Cherokee		1993
Jeep	180			Cherokee		1995
Jeep	224			CJ–7		1979
Jeep	217			Wrangler		1993
Jeep	255			Wrangler		1995
Kawasaki MC	233			EL250		1992–1994
Kawasaki MC	190			KZ550B		1982
Kawasaki MC	182			ZX1000–B1		1988
Kawasaki MC	222			ZX400		1987–1997
Kawasaki MC	247			ZZR1100		1993–1998
Ken–Mex	187			T800		1990–1996
Kenworth	115			T800		1992
Land Rover	212			Defender 110		1993
Laverda MC	37			1000		1975
Lexus	225			SC300, SC400		1991–1996
Lincoln	144			Mark VII		1992
Magni MC	264			Australia, Sfida		1996–1998
Maserati	155			Bi-Turbo		1985
Mazda	184			MX–5 Miata		1990–1993
Mazda	199			RX–7		1986
Mazda	42			RX–7		1978–1981
Mercedes Benz		54		190	201.022	1984
Mercedes Benz		54		190 D	201.126	1984–1989
Mercedes Benz		54		190 D (2.2)	201.122	1984–1989
Mercedes Benz		54		190 E	201.028	1986–1989
Mercedes Benz	22			190 E	201.024	1990
Mercedes Benz	45			190 E	201.024	1991
Mercedes Benz	126			190 E	201.018	1992
Mercedes Benz	71			190 E	201.028	1992
Mercedes Benz		54		190 E (2.3)	201.024	1983–1989
Mercedes Benz		54		190 E (2.6)	201.029	1986–1989
Mercedes Benz		54		190 E 2.3 16	201.034	1984–1989
Mercedes Benz		50		200	115.015	1974–1976
Mercedes Benz		52		200	123.020	1976–1980

Mercedes Benz		52		200	123.220	1979–1985
Mercedes Benz		55		200	124.020	1985
Mercedes Benz		52		200 D	123.120	1980–1982
Mercedes Benz	17			200 D	124.120	1986
Mercedes Benz	11			200 E	124.021	1989
Mercedes Benz	109			200 E	124.012	1991
Mercedes Benz	75			200 E	124.019	1993
Mercedes Benz	3			200 TE	124.081	1989
Mercedes Benz		50		220 D	115.110	1974–1976
Mercedes Benz	168			220 E		1993
Mercedes Benz	167			220 TE Station Wagon		1993–1996
Mercedes Benz		52		230	123.023	1976–1985
Mercedes Benz		52		230 C	123.043	1978–1980
Mercedes Benz		52		230 CE	123.243	1980–1984
Mercedes Benz	84			230 CE	124.043	1991
Mercedes Benz	203			230 CE		1992
Mercedes Benz		52		230 E	123.223	1977–1985
Mercedes Benz		55		230 E	124.023	1985–1987
Mercedes Benz	1			230 E	124.023	1988
Mercedes Benz	20			230 E	124.023	1989
Mercedes Benz	19			230 E	124.023	1990
Mercedes Benz	74			230 E	124.023	1991
Mercedes Benz	127			230 E	124.023	1993
Mercedes Benz		52		230 T	123.083	1977–1985
Mercedes Benz		52		230 TE	123.283	1977–1985
Mercedes Benz		55		230 TE	124.083	1985
Mercedes Benz	2			230 TE	124.083	1989
Mercedes Benz		50		230.4	115.017	1974–1976
Mercedes Benz		49		230.6	114.015	1974–1976
Mercedes Benz		50		240 D	115.117	1974–1976
Mercedes Benz		52		240 D	123.123	1977–1985
Mercedes Benz		50		240 D (3.0)	115.114	1974–1976
Mercedes Benz		52		240 TD	123.183	1977–1985
Mercedes Benz		49		250	114.011	1974–1976
Mercedes Benz		49		250	114.010	1974–1976
Mercedes Benz		52		250	123.026	1976–1985
Mercedes Benz		49		250 C	114.023	1974–1976
Mercedes Benz		49		250 CE	114.022	1974–1976
Mercedes Benz	172			250 D		1992
Mercedes Benz	245			250 E		1990–1993
Mercedes Benz		55		260 E	124.026	1985–1989
Mercedes Benz	105			260 E	124.026	1992
Mercedes Benz	18			260 SE	126.020	1986
Mercedes Benz	28			260 SE	126.020	1989
Mercedes Benz		49		280	114.060	1974–1976
Mercedes Benz		52		280	123.030	1976–1985
Mercedes Benz		49		280 C	114.073	1974–1976
Mercedes Benz		52		280 C	123.050	1977–1980
Mercedes Benz		49		280 CE	114.072	1974–1976
Mercedes Benz		52		280 CE	123.053	1977–1985
Mercedes Benz		49		280 E	114.062	1974–1976
Mercedes Benz		52		280 E	123.033	1976–1985
Mercedes Benz	166			280 E		1993
Mercedes Benz		51		280 S	116.020	1974–1980
Mercedes Benz		53		280 S	126.021	1980–1983
Mercedes Benz		44		280 S.C	107.022	1975–1981
Mercedes Benz		51		280 SE	116.024	1974–1988
Mercedes Benz		53		280 SE	126.022	1980–1985
Mercedes Benz		51		280 SEL	116.025	1974–1980

VEHICLES MANUFACTURED FOR OTHER THAN THE CANADIAN MARKET—Continued

Manufacturer	VSP	VSA	VCP	Model type	Model ID	Model year
Mercedes Benz		53		280 SEL	126.023	1980–1985
Mercedes Benz		44		280 SL	107.042	1974–1985
Mercedes Benz		52		280 TE	123.093	1977–1985
Mercedes Benz		52		300 CD	123.150	1978–1985
Mercedes Benz		55		300 CE	124.050	1988–1989
Mercedes Benz	64			300 CE	124.051	1990
Mercedes Benz	83			300 CE	124.051	1991
Mercedes Benz	117			300 CE	124.050	1992
Mercedes Benz		52		300 D	123.130	1976–1985
Mercedes Benz		52		300 D	123.133	1977–1985
Mercedes Benz		55		300 D	124.130	1985, 1986
Mercedes Benz		55		300 D Turbo	124.133	1985–1989
Mercedes Benz		55		300 E	124.030	1985–1989
Mercedes Benz	114			300 E	124.031	1992
Mercedes Benz	192			300 E 4-Matic		1990–1993
Mercedes Benz			5	300 GE	463.228	1990–1992, 1994
Mercedes Benz			3	300 GE	463.228	1993
Mercedes Benz		53		300 SD	126.120	1981–1989
Mercedes Benz		53		300 SE	126.024	1985–1989
Mercedes Benz	68			300 SE	126.024	1990
Mercedes Benz	69			300 SE	140.032	1992
Mercedes Benz	67			300 SE	140.032	1993
Mercedes Benz		53		300 SEL	126.025	1986–1989
Mercedes Benz	21			300 SEL	126.025	1990
Mercedes Benz		44		300 SL	107.041	1986–1988
Mercedes Benz	7			300 SL	107.041	1989
Mercedes Benz	54			300 SL	129.006	1992
Mercedes Benz		52		300 TD	123.193	1977–1985
Mercedes Benz		55		300 TD Turbo	124.193	1986–1989
Mercedes Benz		55		300 TE	124.090	1986–1989
Mercedes Benz	40			300 TE	124.090	1990
Mercedes Benz	193			300 TE		1992
Mercedes Benz	142			320 SL		1992, 1993
Mercedes Benz		44		350 SC	107.023	1974–1979
Mercedes Benz		51		350 SE	116.028	1974–1980
Mercedes Benz		51		350 SEL	116.029	1974–1980
Mercedes Benz		44		350 SL	107.043	1974–1978
Mercedes Benz		44		380 SC	107.025	1981–1989
Mercedes Benz		53		380 SE	126.032	1979–1989
Mercedes Benz		53		380 SE	126.043	1982–1989
Mercedes Benz		53		380 SEL	126.033	1980–1989
Mercedes Benz		44		380 SL	107.045	1980–1989
Mercedes Benz	169			420 E		1993
Mercedes Benz		53		420 SE	126.034	1985–1989
Mercedes Benz	209			420 SEC		1990
Mercedes Benz		53		420 SEL	126.035	1986–1989
Mercedes Benz	48			420 SEL	126.035	1990
Mercedes Benz		44		420 SL	107.047	1986
Mercedes Benz	230			420SE		1990–1991
Mercedes Benz		44		450 SC	107.024	1974–1989
Mercedes Benz		51		450 SE	116.032	1974–1980
Mercedes Benz		51		450 SEL	116.033	1974–1988
Mercedes Benz		51		450 SEL (6.9)	116.036	1974–1988
Mercedes Benz		44		450 SL	107.044	1974–1989

Mercedes Benz			11	463		1996
Mercedes Benz			15	463		1997
Mercedes Benz			16	463		1998
Mercedes Benz			13	463 LWB V–8		1992–1996
Mercedes Benz			14	463 SWB		1990–1996
Mercedes Benz	56			500 E	124.036	1991
Mercedes Benz		44		500 SC	107.026	1978–1981
Mercedes Benz		53		500 SE	126.036	1980–1986
Mercedes Benz	35			500 SE	126.036	1988
Mercedes Benz	154			500 SE		1990
Mercedes Benz	26			500 SE	140.050	1991
Mercedes Benz	50			500 SE	140.050	1992
Mercedes Benz		53		500 SEC	126.044	1981–1989
Mercedes Benz	66			500 SEC	126.044	1990
Mercedes Benz		53		500 SEL	126.037	1980–1989
Mercedes Benz	23			500 SEL	129.066	1989
Mercedes Benz	153			500 SEL		1990
Mercedes Benz	63			500 SEL	126.037	1991
Mercedes Benz	147			500 SEL		1992–1993
Mercedes Benz		44		500 SL	107.046	1980–1989
Mercedes Benz	33			500 SL	129.066	1991
Mercedes Benz	60			500 SL	129.006	1992
Mercedes Benz	140			500 SL	129.067	1993–1995
Mercedes Benz		53		560 SEC	126.045	1986–1989
Mercedes Benz	141			560 SEC	126.045	1990
Mercedes Benz		53		560 SEL	126.039	1986–1989
Mercedes Benz	89			560 SEL	126.039	1990
Mercedes Benz		44		560 SL	107.048	1986–1989
Mercedes Benz		43		600	100.012	1974–1981
Mercedes Benz		43		600 Landaulet	100.015	1974–1981
Mercedes Benz		43		600 Long 4dr	100.014	1974–1981
Mercedes Benz		43		600 Long 6dr	100.016	1974–1981
Mercedes Benz	185			600 SEC Coupe		1993
Mercedes Benz	27			600 SEL	140.057	1992
Mercedes Benz	121			600 SL	129.076	1992
Mercedes Benz	130			600 SL	129.076	1992, 1993
Mercedes Benz		77		All other models except Model ID 114 and 115 with sales designations ''long,'' ''station wagon,'' or ''ambulance.''.		1974–1989
Mercedes Benz	246			C220		1994
Mercedes Benz	157			C220		1995
Mercedes Benz	204			C280		1994
Mercedes Benz	262			C280		1995
Mercedes Benz	207			E200		1994
Mercedes Benz	168			E220		1994–1996
Mercedes Benz	245			E250		1994–1995
Mercedes Benz	166			E280		1994–1996
Mercedes Benz	240			E320		1994–1998
Mercedes Benz	169			E420		1994–1996
Mercedes Benz	163			E500		1994
Mercedes Benz			6	G320		1995
Mercedes Benz	85			S280	140.028	1994
Mercedes Benz	120			S320	140.033	1994
Mercedes Benz	236			S320		1994–1998
Mercedes Benz	267			S420		1994–1997
Mercedes Benz	235			S500		1994–1997
Mercedes Benz	185			S600 Coupe		1994–1996
Mercedes Benz	214			S600L		1994
Mercedes Benz	257			SLK		1997–1998

VEHICLES MANUFACTURED FOR OTHER THAN THE CANADIAN MARKET—Continued

Manufacturer	VSP	VSA	VCP	Model type	Model ID	Model year
MG	206			MGB Roadster		1974
Mitsubishi	13			Galant SUP		1989
Mitsubishi	8			Galant VX		1988
Mitsubishi	170			Pajero		1984
Moto Guzzi MC	118			Daytona		1993
Moto Guzzi MC	264			Daytona RS		1996–1998
Nissan	162			240SX		1988
Nissan	198			300ZX		1984
Nissan		75		Fairlady and Fairlady Z		1975–1979
Nissan	138			Maxima		1989
Nissan	139			Stanza		1987
Nissan		75		Z and 280Z		1974–1981
Peugeot		65		405		1989
Pontiac	189			Transport MPV		1993
Porsche	29			911 C4		1990
Porsche		56		911 Cabriolet		1984–1989
Porsche		56		911 Carrera		1974–1989
Porsche	52			911 Carrera		1992
Porsche	165			911 Carrera		1993, 1995, 1996
Porsche	103			911 Carrera		1994
Porsche		56		911 Coupe		1974–1989
Porsche		56		911 Targa		1974–1989
Porsche		56		911 Turbo		1976–1989
Porsche	125			911 Turbo		1992
Porsche		58		914		1974–1976
Porsche		59		924 Coupe		1976–1989
Porsche		59		924 S		1987–1989
Porsche		59		924 Turbo Coupe		1979–1989
Porsche	266			928		1991–1996
Porsche		60		928 Coupe		1976–1989
Porsche		60		928 GT		1979–1989
Porsche		60		928 S Coupe		1983–1989
Porsche		60		928 S4		1979–1989
Porsche	210			928 S4		1990
Porsche	97			944		1990
Porsche		61		944 Coupe		1982–1989
Porsche		61		944 S Coupe		1987–1989
Porsche	152			944 S2 2 door Hatchback		1990
Porsche		61		944 Turbo Coupe		1985–1989
Porsche	116			946		1994
Porsche		79		All other models except Model 959		1974–1989
Porsche	261			Boxster		1997
Rolls Royce	16			Bentley		1989
Rolls Royce	186			Bentley Brooklands		1993
Rolls Royce	258			Bentley Continental R		1990–1993
Rolls Royce	53			Bentley Turbo		1986
Rolls Royce	243			Bentley Turbo R		1995
Rolls Royce	122			Camargue		1984–1985
Rolls Royce		62		Silver Shadow		1974–1979
Rolls Royce	188			Silver Spur		1984
Saab	158			900		1983
Saab	219			900 SE		1990–1994, 1996, 1997
Saab	213			900 SE		1995

Saab	59			9000		1988
Sprite			12	Musketeer Trailer		1980
Suzuki MC	111			GS850		1985
Suzuki MC	208			GSX750		1983
Suzuki MC	227			GSXR1100		1986–1997
Toyota		63		Camry		1987–1988
Toyota	39			Camry		1989
Toyota		64		Celica		1987–1988
Toyota		65		Corolla		1987–1988
Toyota	252			Landcruiser		1981–1988
Toyota	101			Landcruiser		1989
Toyota	218			Landcruiser		1990–1996
Toyota	200			Van		1987, 1988
Triumph MC	263			Bonneville		1976
Volkswagen	237			Beetle Convertible		1974–1979
Volkswagen	237			Beetle Sedan		1974–1977
Volkswagen	159			Golf		1987
Volkswagen	80			Golf		1988
Volkswagen	92			Golf		1993
Volkswagen	73			Golf Rally		1988
Volkswagen	149			GTI (Canadian)		1991
Volkswagen	148			Passat 4 door Sedan		1992
Volkswagen		42		Scirocco		1986
Volkswagen	251			Transporter		1990
Volkswagen	239			Type 181 (The Thing)		1974–1975
Volvo	43			262C		1981
Volvo	87			740 Sedan		1988
Volvo	95			940GL		1993
Volvo	132			945GL		1994
Volvo	176			960 Sedan & Wagon		1994
Yamaha MC	113			FJ1200		1991
Yamaha MC	171			RD–350		1983

Issued on: September 21, 1998.

Harry Thompson,

Acting Director, Office of Vehicle Safety Compliance.

[FR Doc. 98–25815 Filed 9–25–98; 8:45 am]

BILLING CODE 4910–59–P

Proposed Rules

Federal Register
Vol. 63, No. 187
Monday, September 28, 1998

This section of the FEDERAL REGISTER contains notices to the public of the proposed issuance of rules and regulations. The purpose of these notices is to give interested persons an opportunity to participate in the rule making prior to the adoption of the final rules.

NUCLEAR REGULATORY COMMISSION

10 CFR Part 70

Domestic Licensing of Special Nuclear Material; Public Meeting

AGENCY: Nuclear Regulatory Commission (NRC).

ACTION: Notice of meeting.

SUMMARY: NRC will host a public meeting in Rockville, Maryland with representatives of the Nuclear Energy Institute (NEI) to discuss the NRC staff's proposed revisions to 10 CFR Part 70, ''Domestic Licensing of Special Nuclear Material.'' NRC staff and NEI briefed the Commission on August 25, 1998, regarding SECY–98–185, ''Proposed Rulemaking—Revised Requirements for the Domestic Licensing of Special Nuclear Material,'' dated July 30, 1998. Subsequently, NRC staff and NEI representatives agreed to meet to foster an improved understanding of the NRC staff's proposed revisions to 10 CFR Part 70, to better delineate areas of agreement and disagreement, and to identify potential resolutions, where possible.

DATES: The meeting is scheduled for Tuesday, September 29, 1998 from 9:00 am to 4:00 pm. The meeting is open to the public. Persons who wish to attend the meeting should contact Jim Hennigan at (301) 415–6850 no later than Monday, September 28, 1998.

ADDRESSES: NRC's Licensing Board Courtroom at Two White Flint North, Room 3B45, 11545 Rockville Pike, Rockville, Maryland. Visitor parking around the NRC building is limited; however, the meeting site is located adjacent to the White Flint Station on the Metro Red Line.

FOR FURTHER INFORMATION CONTACT: Lidia Roché, Office of Nuclear Material Safety and Safeguards, U.S. Nuclear Regulatory Commission, Washington, DC 20555, telephone: (301) 415–7830, fax: (301) 415–5390, e-mail: lar2@nrc.gov.

Dated at Rockville, Maryland this 22nd day of September, 1998.

For the Nuclear Regulatory Commission.

E. William Brach,

Deputy Director, Division of Fuel Cycle Safety and Safeguards, NMSS.

[FR Doc. 98–25834 Filed 9–25–98; 8:45 am]

BILLING CODE 7590–01–P

DEPARTMENT OF TRANSPORTATION

Federal Aviation Administration

14 CFR Part 39

[Docket No. 98–ANE–08–AD]

RIN 2120–AA64

Airworthiness Directives; International Aero Engines AG (IAE) V2500–A5/–D5 Series Turbofan Engines

AGENCY: Federal Aviation Administration, DOT.

ACTION: Notice of proposed rulemaking (NPRM).

SUMMARY: This document proposes the adoption of a new airworthiness directive (AD) that is applicable to International Aero Engines AG (IAE) V2500–A5/–D5 series turbofan engines. This proposal would require removal from service of certain high pressure compressor (HPC) stage 9–12 drums prior to reaching the new reduced cyclic life limits, and replacement with serviceable parts. This proposal is prompted by the reduction of the life limit for certain IAE V2500 HPC stage 9–12 drums due to higher stresses in this part than originally predicted. The actions specified by the proposed AD are intended to prevent HPC stage 9–12 drum failure, which could result in an uncontained engine failure and damage to the aircraft.

DATES: Comments must be received by November 27, 1998.

ADDRESSES: Submit comments in triplicate to the Federal Aviation Administration (FAA), New England Region, Office of the Regional Counsel, Attention: Rules Docket No. 98–ANE–08–AD, 12 New England Executive Park, Burlington, MA 01803–5299. Comments may also be sent via the Internet using the following address: ''9-ad-engineprop@faa.dot.gov''. Comments sent via the Internet must contain the docket number in the subject line. Comments may be inspected at this location between 8 a.m. and 4:30 p.m., Monday through Friday, except Federal holidays.

The service information referenced in the proposed rule may be obtained from Rolls-Royce Commercial Aero Engine Limited, P.O. Box 31, Derby, England, DE2488J, Attention: Publication Services ICL–TP. This information may be examined at the FAA, New England Region, Office of the Regional Counsel, 12 New England Executive Park, Burlington, MA.

FOR FURTHER INFORMATION CONTACT: Diane Cook, Aerospace Engineer, Engine Certification Office, FAA, Engine and Propeller Directorate, 12 New England Executive Park, Burlington, MA 01803–5299; telephone (781) 238–7133, fax (781) 238–7199.

SUPPLEMENTARY INFORMATION:

Comments Invited

Interested persons are invited to participate in the making of the proposed rule by submitting such written data, views, or arguments as they may desire. Communications should identify the Rules Docket number and be submitted in triplicate to the address specified above. All communications received on or before the closing date for comments, specified above, will be considered before taking action on the proposed rule. The proposals contained in this notice may be changed in light of the comments received.

Comments are specifically invited on the overall regulatory, economic, environmental, and energy aspects of the proposed rule. All comments submitted will be available, both before and after the closing date for comments, in the Rules Docket for examination by interested persons. A report summarizing each FAA-public contact concerned with the substance of this proposal will be filed in the Rules Docket.

Commenters wishing the FAA to acknowledge receipt of their comments submitted in response to this notice must submit a self-addressed, stamped postcard on which the following statement is made: ''Comments to Docket Number 98–ANE–08–AD.'' The postcard will be date stamped and returned to the commenter.

Availability of NPRMs

Any person may obtain a copy of this NPRM by submitting a request to the FAA, New England Region, Office of the Regional Counsel, Attention: Rules Docket No. 98–ANE–08–AD, 12 New England Executive Park, Burlington, MA 01803–5299.

Discussion

The Federal Aviation Administration (FAA) has been made aware that the stresses on certain International Aero Engines AG (IAE) V2500 Series High Pressure Compressor (HPC) stage 9–12 drums are higher than originally predicted. Based on improved analytical stress analyses and test results the FAA has determined that certain HPC stage 9–12 drums have a lower cyclic life than originally calculated depending on the engine model and thrust rating. This condition, if not corrected, could result in an HPC stage 9–12 drum failure, which could result in an uncontained engine failure and damage to the aircraft.

The FAA has reviewed and approved the technical contents of IAE Service Bulletin (SB) N. V2500–ENG–72–0293, dated December 19, 1997, that describes lower cyclic life limits of the HPC stage 9–12 drum depending on the engine model and thrust rating.

Since an unsafe condition has been identified that is likely to exist or develop on other products of this same type design, the proposed AD would require removal from service of certain HPC stage 9–12 drums prior to reaching new, reduced cyclic life limits, and replacement with serviceable parts. The actions would be required to be accomplished in accordance with the SB described previously.

There are approximately 400 engines of the affected design in the worldwide fleet. The FAA estimates that 162 engines installed on aircraft of U.S. registry would be affected by this proposed AD, that it would take approximately no additional work hours to accomplish the proposed actions. Required parts, on a prorated basis, would cost approximately $49,000 per engine. Based on these figures, the total cost impact of the proposed AD on U.S. operators is estimated to be $7,900,000.

The regulations proposed herein would not have substantial direct effects on the States, on the relationship between the national government and the States, or on the distribution of power and responsibilities among the various levels of government. Therefore, in accordance with Executive Order 12612, it is determined that this proposal would not have sufficient federalism implications to warrant the preparation of a Federalism Assessment.

For the reasons discussed above, I certify that this proposed regulation (1) is not a ''significant regulatory action'' under Executive Order 12866; (2) is not a ''significant rule'' under the DOT Regulatory Policies and Procedures (44 FR 11034, February 26, 1979); and (3) if promulgated, will not have a significant economic impact, positive or negative, on a substantial number of small entities under the criteria of the Regulatory Flexibility Act. A copy of the draft regulatory evaluation prepared for this action is contained in the Rules Docket. A copy of it may be obtained by contacting the Rules Docket at the location provided under the captain **ADDRESSES**.

List of Subjects in 14 CFR Part 39

Air Transportation, Aircraft, Aviation safety, Safety.

The Proposed Amendment

Accordingly, pursuant to the authority delegated to me by the Administrator, the Federal Aviation Administration proposed to amend part 39 of the Federal Aviation Regulation (14 CFR part 39) as follows:

PART 39—AIRWORTHINESS DIRECTIVES

1. The authority citation for part 39 continues to read as follows:

Authority: 49 U.S.C. 106(g), 40113, 44701.

§ 39.13 [Amended]

2. Section 39.13 is amended by adding the following new airworthiness directive:

International Aero Engines: Docket No. 98–ANE–08–AD.

Applicablity: International Aero Engines AG (IAE) Models V2522–A5, V2524–A5, V2527–A5, V2527E–A5, V2530–A5, V2533–A5, V2525–D5, V2528–D5 turbofan engines, installed on but not limited to Airbus Industrie A319, A320, A321 series and McDonnell Douglas MD–90 series aircraft.

Note 1: This airworthiness directive (AD) applies to each engine identified in the preceding applicability provision, regardless of whether it has been modified, altered, or repaired in the area subject to the requirements of this AD. For engines that have been modified, altered, or repaired so that the performance of the requirements of this AD is affected, the owner/operator must request approval for an alternative method of compliance in accordance with paragraph (d) of this AD. The request should include an assessment of the effect of the modification, alternation, or repair on the unsafe condition addressed by this AD; and, if the unsafe condition has not been eliminated, the request should include specific proposed actions to address it.

Compliance: Required as indicated, unless accomplished previously.

To prevent high pressure compressor (HPC) stage 9–12 drum failure, which could result in an uncontained engine failure and damage to the aircraft, accomplish the following:

(a) Remove for service HPC stage 9–12 drums, part number (P/N) 6A4156, operated in a single engine model at a single thrust rating prior to accumulating the new, reduced cyclic life limits, which are dependent upon the engine installation and thrust rating, as described in Table 1 of IAE Service Bulletin (SB) No. V2500–ENG–72–0293, dated December 19, 1997, and replace with a serviceable part.

(b) Remove from service HPC stage 9–12 drums, P/N 6A4156, installed in engines which operate at a mixture of thrust ratings, prior to accumulating the cyclic life limit of the highest thrust rating employed, as described in Table 1 of IAE SB No. V2500–ENG–72–0293, dated December 19, 1997, and replace with a serviceable part. The use of an HPC stage 9–12 drum, P/N 6A4156, at a higher thrust rating for even a single flight invokes the cyclic life limit applicable for the higher thrust rating.

(c) Remove from service HPC stage 9–12 drums, P/N 6A4156, removed from one engine model and installed into another engine model or operated at different thrust ratings prior to accumulating the applicable component cyclic life limit for the engine model with the highest thrust rating, as described in Table 1 of IAE SB No. V2500–ENG–72–0293, dated December 19, 1997, regardless of the cycles in service at this rating, and replace with a serviceable part.

(d) This AD establishes a new cyclic retirement life limits for HPC stage 9–12 drums, part number (P/N) 6A4156. Thereafter, except as provided in paragraph (e) of this AD, no alternative cyclic retirement life limits may be approved for HPC stage 9–12 drums.

(e) An alternative method of compliance or adjustment of the compliance time that provides an acceptable level of safety may be used if approved by the Manager, Engine Certification Office. Operators shall submit their request through an appropriate FAA Principal Maintenance Inspector, who may add comments and then send it to the Manager, Engine Certification Office.

Note 2: Information concerning the existence of approved alternative methods of compliance with with this airworthiness directive, if any, may be obtained from the Engine Certification Office.

(f) Special flight permits may be issued in accordance with sections 21.197 and 21.199 of the Federal Aviation Regulations (14 CFR 21.197 and 21.199) to operate the aircraft to a location where the requirements of this AD can be accomplished.

Issued in Burlington, Massachusetts, on September 21, 1998.

David A. Downey,

Assistant Manager, Engine and Propeller Directorate, Aircraft Certification Service.

[FR Doc. 98–25777 Filed 8–25–98; 8:45 am]

BILLING CODE 4910–13–P

DEPARTMENT OF ENERGY

Federal Energy Regulatory Commission

18 CFR Parts 161, 250, and 284

[Docket No. RM98–10–000]

Regulation of Short-Term Natural Gas Transportation Services; Notice of Workshop on Pipeline Capacity Auctions

September 18, 1998.

AGENCY: Federal Energy Regulatory Commission.

ACTION: Notice of Workshop on Pipeline Capacity Auctions.

SUMMARY: The staff of the Federal Energy Regulatory Commission is holding a workshop to discuss pipeline capacity auctions as contemplated in the Notice of Proposed Rulemaking issued on July 29, 1998 (NOPR) (63 FR 42982, August 11, 1998). The purpose of the workshop is for staff to provide background information about auctions and auction formats and to answer questions to facilitate the submission of comments on the NOPR. The workshop will include time for questions and answers.

DATES: October 20, 1998, 9:30 a.m.

ADDRESSES: Federal Energy Regulatory Commission, 888 First Street, N.E., Washington DC 20426.

FOR FURTHER INFORMATION CONTACT: Laurel C. Hyde, Office of Economic Policy, Federal Energy Regulatory Commission, 888 First Street, N.E., Washington, DC 20426, 202–208–0146.

SUPPLEMENTARY INFORMATION: In addition to publishing the full text of this document in the **Federal Register**, the Commission also provides all interested persons an opportunity to inspect or copy the contents of this document during normal business hours in the Public Reference Room at 888 First Street, N.E., Room 2A, Washington, D.C. 20426.

The Commission Issuance Posting System (CIPS) provides access to the texts of formal documents issued by the Commission. CIPS can be accessed via Internet through FERC's Homepage (http://www.ferc.fed.us) using the CIPS Link or the Energy Information Online icon. The full text of this document will be available on CIPS in ASCII and WordPerfect 6.1 format. CIPS is also available through the Commission's electronic bulletin board service at no charge to the user and may be accessed using a personal computer with a modem by dialing 202–208–1397, if dialing locally, or 1–800–856–3920, if dialing long distance. To access CIPS, set your communications software to 19200, 14400, 12000, 9600, 7200, 4800, 2400, or 1200 bps, full duplex, no parity, 8 data bits and 1 stop bit. User assistance is available at 202–208–2474 or by E-mail to cipsmaster@ferc.fed.us.

This document is also available through the Commission's Records and Information Management System (RIMS), an electronic storage and retrieval system of documents submitted to and issued by the Commission after November 16, 1981. Documents from November 1995 to the present can be viewed and printed. RIMS is available in the Public Reference Room or remotely via Internet through FERC's Homepage using the RIMS link or the Energy Information Online icon. User assistance is available at 202–208–2222, or by E-mail to rimsmaster@ferc.fed.us.

Finally, the complete text on diskette in WordPerfect format may be purchased from the Commission's copy contractor, RVJ International, Inc. RVJ International, Inc. is located in the Public Reference Room at 888 First Street, N.E., Washington, D.C. 20426.

Take notice that on October 20, 1998, the staff of the Federal Energy Regulatory Commission will hold a workshop to discuss pipeline capacity auctions as contemplated in the Notice of Proposed Rulemaking (NOPR), issued on July 29, 1998.[1] The purpose of the workshop is for staff to provide background information about auctions and auction formats and to answer questions to facilitate the submission of comments on the NOPR. The workshop will include time for questions and answers.

The workshop will begin at 9:30 a.m. at the Commission's offices, 888 First Street, N.E., Washington, D.C. in a room to be designated. All interested persons are invited to attend and participate.

To ensure the workshop provides information responsive to parties' specific questions or to areas in which parties believe clarification would be helpful, staff asks that questions or clarifications be submitted by October 13, 1998. Responsive information will be integrated, to the extent possible, into the workshop presentations. Such questions or clarification requests can be either faxed or sent by Internet E-Mail. Faxes should be addressed to Laurel Hyde at 202–208–1010. E-Mail should be sent to comment.rm@ferc.fed.us. The subject line of the E-Mail should specify ''Docket No. RM98–10–000—Auction Workshop''. Any attachments to the E-Mail should be in WordPerfect 6.1 or lower format or in ASCII format. A reply to the E-Mail will be sent to acknowledge receipt.

In addition, those who wish to participate in the question and answer period are encouraged to register in advance to reserve a place in the main workshop room. Please register by October 13, 1998, by calling Tawanna Lewis, Shirley Parker or Rita Carter at 202–208–1007 or sending a fax or E-Mail as described above.

The Capitol Connection may broadcast this workshop in the Washington, D.C. area if there is sufficient interest. For those outside the Washington, D.C. area, the Capitol Connection may broadcast the workshop live via satellite for a fee if there is sufficient interest to justify the cost. To indicate interest in either the local or national broadcast, please call Shirley Al-Jarani or Julia Morelli at the Capitol Connection (703–993–3100) as soon as possible, or e-mail to capcon@gmu.edu.

In addition, National Narrowcast Network's Hearing-On-The-Line service covers all FERC meetings live by telephone so that interested persons can listen at their desks, from their homes, or from any phone, without special equipment. Billing is based on time on-line. Call 202–966–2211 for further details.

Questions about the workshop should be directed to: Laurel C. Hyde, Office of Economic Policy, Federal Energy Regulatory Commission, 888 First Street, N.E., Washington, DC 20426, 202–208–0146.

David P. Boergers,

Secretary.

[FR Doc. 98–25808 Filed 9–25–98; 8:45 am]

BILLING CODE 6717–01–P

[1] Regulation of Short-Term Natural Gas Transportation Services, Notice of Proposed Rulemaking, 63 FR 42982 (Aug. 11, 1998).

DEPARTMENT OF TRANSPORTATION

National Highway Traffic Safety Administration

49 CFR Part 595

[Docket No. NHTSA–98–4332]

RIN 2127–AG40

Exemption From the Make Inoperative Prohibition

AGENCY: National Highway Traffic Safety Administration (NHTSA), DOT.

ACTION: Notice of proposed rulemaking.

SUMMARY: NHTSA is proposing a limited exemption from a statutory provision prohibiting dealers, repair businesses

and other specified commercial entities from removing safety equipment or features installed on motor vehicles pursuant to the Federal motor vehicle safety standards and from altering the equipment or features so as to adversely affect their performance. Repair businesses and dealers would be exempted from the prohibition to facilitate their modification of motor vehicles so that persons with disabilities can drive or ride in them. The exemption would permit modifications that have an unavoidable adverse effect on safety equipment or features installed pursuant to some, but not all requirements of the Federal safety standards. The requirements tentatively selected for inclusion in the exemption were chosen after carefully balancing their safety significance against the types of modifications needed for persons with disabilities. By specifying which modifications may be made, the proposal rule would provide universal, comprehensive guidance to all modifiers and would thereby enhance the safety of vehicles modified to accommodate people with disabilities.

DATES: Comments must be received by December 28, 1998.

ADDRESSES: Comments should refer to the docket number of this proposed rule and be submitted to: Docket Management, Room PL–401, 400 Seventh Street, SW, Washington, DC 20590 (Docket Room hours are 10:00 a.m.–5 p.m., Monday through Friday.)

FOR FURTHER INFORMATION CONTACT:

For non-legal issues: Gayle Dalrymple, Office of Crash Avoidance Standards, NPS–20, National Highway Traffic Safety Administration, 400 Seventh Street, SW, Washington, DC 20590, telephone (202) 366–5559.

For legal issues: Nicole Fradette, Office of Chief Counsel, National Highway Traffic Safety Administration, 400 Seventh Street, SW, Washington, DC 20590, telephone (202) 366–2992, facsimile (202) 366–3820.

SUPPLEMENTARY INFORMATION:

Table of Contents

I. Background and Overview
II. Proposed Exemption
A. Summary
B. Specifics of the Proposed Exemption
C. Scope of Proposed Exemption
1. Standards for which Permission would be Granted to Make Safety Features Inoperative
2. Standards for which Permission would not be Granted to Make Safety Features Inoperative
III. Explanation of Procedural Differences Between Proposed Exemption and Existing Exemption re Air Bag On-Off Switches
IV. Additional Considerations
V. Request for Comments
VI. Proposed Effective Date
VII. Regulatory Analyses and Notices
VIII. Comments

I. Background and Overview

The U.S. Census Bureau estimates that nearly 49 million Americans, or 19.4 percent of the American population, have some type of physical, mental or other disability.[1] Their disabilities provide special challenges for these people in obtaining and using various necessities of life. One of those necessities is transportation.

Persons with disabilities often need their motor vehicles modified to allow them to drive or ride in those vehicles. For example, wheelchair lifts, power seats and hand controls are often installed to enable paraplegics to enter and operate vehicles. The National Highway Traffic Safety Administration (NHTSA) estimates that some 383,000 vehicles have some type of adaptive equipment installed in them to accommodate a driver or passenger with a disability.[2] The agency believes the number of vehicles modified annually will increase as a greater percentage of the population ages and as the Americans With Disabilities Act (ADA)[3] improves access to employment, travel, and recreation for people with disabilities.[4]

Modifying vehicles often involves removing equipment or features installed pursuant to the Federal motor vehicle safety standards (standards) promulgated by NHTSA or altering them so as to reduce their performance.[5] For example, some individuals who have limited range of motion in their arms need to replace the vehicle's original steering wheel with a reduced diameter steering wheel so that they can operate the vehicle. Removing the original steering wheel and air bag and replacing it with a smaller steering wheel that lacks an air bag affects the vehicle's compliance with Standard No. 208, Occupant Crash Protection, which requires the vehicle to be equipped with a driver's side air bag.

Such removal or alteration violates a statutory provision which prohibits certain parties from making such equipment and features inoperative. Section 30122 of Title 49 of the United States Codes provides that manufacturers, distributors, dealers,[6] and repair businesses[7] may not knowingly make inoperative any part of a device or element of design installed on or in a motor vehicle in compliance with an applicable standard. The agency interprets ''make inoperative'' to mean any action that removes or disables safety equipment or features installed to comply with an applicable standard, or degrades the performance of such equipment or features.[8] Violations of this provision are punishable by civil penalties of up to $1,100 per violation.

The statute authorizes NHTSA to issue regulations exempting a person from the make inoperative prohibition and specifying which equipment and features may be made inoperative. 49 U.S.C. 30122(c)(1). Such a regulation may be issued for an individual or for a class of individuals.[9] The legislative

[1] John McNeil, Disability, U.S. Census Bureau (May 9, 1997).

[2] Estimating the Number of Vehicles Adapted for Use by Persons with Disabilities, NHTSA Research Note, Dec. 1997.

[3] Pub. L. 101–336, 42 U.S.C. sections 12101, *et seq.*

[4] The ADA sweepingly endorsed the rights of persons with disabilities and greatly expanded the existing obligations of the public sector towards persons with disabilities under the Rehabilitation Act of 1973 (29 U.S.C. sections 701 *et seq.*). The ADA created specific affirmative obligations on private entities who conduct business with the general public.

[5] NHTSA issues safety standards that specify performance requirements for new motor vehicles and items of motor vehicle equipment. 49 U.S.C. 30111 and 49 CFR Part 571. Vehicle and equipment manufacturers must certify that their new products comply with all applicable standards before they sell their products. For vehicles manufactured by two or more manufacturers, the final-stage manufacturer is ultimately responsible for certifying the vehicle. A final-stage manufacturer is defined as a person who performs such manufacturing operations on an incomplete vehicle that it becomes a completed vehicle. 49 CFR 568.3. If a completed, certified vehicle is modified prior to its first retail sale (other than by the addition, substitution, or removal of readily attachable components), the person making the modification is an alterer and is required to certify that, as altered, the vehicle continues to comply with all applicable standards. 49 CFR 567.7. Businesses that modify a vehicle after its first sale for purposes other than resale are not required to certify that the vehicle, as modified, continues to comply with the standards.

[6] Section 30102 of 49 U.S.C. defines ''dealer'' as ''a person selling and distributing new motor vehicles or motor vehicle equipment primarily to purchasers that in good faith purchase the vehicles or equipment other than for resale.''

[7] Section 30122(a) of 49 U.S.C. defines ''motor vehicle repair business'' as ''a person holding itself out to the public to repair for compensation a motor vehicle or motor vehicle equipment.'' NHTSA has interpreted this term to include businesses that service vehicles by adding features or components to or otherwise customizing those vehicles.

[8] For example, Standard 208, Occupant crash protection, requires certain vehicles to be equipped with air bags and to meet specified injury criteria in a crash. Deactivating or removing the air bag would make inoperative the air bag installed to comply with the standard. Cutting the knee bolster could affect the femur load criterion and, therefore, degrade the performance of the vehicle in a crash.

[9] Section 30122(c)(1) of Title 49 of the United States Code authorizes the agency ''to exempt a person from'' the make inoperative provision if the agency ''decides the exemption is consistent with motor vehicle safety. * * *'' The question of whether the agency has the authority to exempt classes of people from the make inoperative prohibition or is limited to exempting individuals

history of the Act makes it clear that one of the intended purposes of the exemption was to accommodate the need of individuals with disabilities for vehicle modifications.[10]

To date, the agency has not issued a regulation exempting modifiers as a class from the make inoperative provision for the purpose of modifying vehicles to accommodate individuals with disabilities.[11] Instead, the agency considers requests from individual modifiers for permission to modify vehicles for individuals with disabilities and responds on a request by request basis. In some cases, the Chief Counsel of NHTSA has issued letters stating that the agency will not institute enforcement proceedings against the motor vehicle dealer or repair business for modifying a particular vehicle to accommodate a person's disability. Such letters also caution that only necessary modifications may be made and that the person making the modifications should consider the safety consequences of the modifications. While this approach eliminates the risk of civil penalties, it still leaves vehicle dealers and repair businesses in technical violation of the make inoperative prohibition. Further, it does not provide guidance to modifiers as to which Federally-required safety equipment and features may be modified consistent with the interests of motor vehicle safety. In addition, the agency is concerned that the process is largely bypassed by most modifiers.

The agency believes that many modifiers modify vehicles without requesting agency permission, and without receiving any agency guidance.[12] Although approximately 383,000 vehicles have been modified to date[13] and there are an estimated 400 modifiers,[14] the agency has only received a total of approximately 250 requests[15] for permission to modify a particular vehicle to accommodate a driver or passenger with a disability. While NHTSA estimates that approximately 200 of the modifiers receive some guidance on making vehicle modifications from industry associations and others, the balance apparently receive no guidance at all.[16]

The making of modifications without sufficient guidance raises concerns about the ability of persons with disabilities to have their vehicles modified in ways that do not unnecessarily or excessively affect the safety of their vehicles. Modifiers tend to be small businesses with limited engineering and other resources. Most do not have the resources to test whether a particular modification would affect a vehicle's compliance with a particular standard.[17]

The agency's experience with the vehicle modification industry indicates that knowledge of the standards varies among the modifiers. While some modifiers are very knowledgeable of the standards and the need to preserve a vehicle's compliance with them, others are less knowledgeable. Many modifiers do not possess sufficient knowledge of the standards to judge whether a particular modification may affect a vehicle's compliance with the standards.

To address these safety concerns, the agency has attempted to increase the level of knowledge by participating in national industry conferences and through other means.[18] As a result, modifiers have increasingly sought NHTSA's guidance with respect to the specific modifications they wish to perform for individuals with disabilities. The agency has also amended several of its standards to address particular needs of persons with disabilities.[19]

However, NHTSA believes that a more comprehensive method is needed now to address all of the standards and to reach the industry as a whole. The agency believes that a regulation is needed to assist modifiers and members of the disabled population in making appropriate decisions with respect to

on a case-by-case basis arose in the agency's rulemaking on air bag on-off switches. 62 FR 62406; November 21, 1997. The agency believes that Congress intended to permit an exemption based on classes of people. The singular includes the plural, absent contrary statutory language or purpose. Section 30122 neither contains any language nor has any purpose that would preclude reading ''person'' in the plural. NHTSA notes that similar use of the singular in 15 U.S.C. 1402(e), the statutory predecessor to 49 U.S.C. 30118(a) regarding the making of a defect and noncompliance determination concerning a motor vehicle or replacement equipment, has repeatedly been judicially interpreted to permit NHTSA to make determinations regarding classes of vehicles or equipment. Section 30118(a) was enacted in the same public law, Pub. L. No. 93–492, that contained the make inoperative prohibition.

[10] The report stated that ''exemptions may be warranted for owners with special medical problems, who require special controls. * * *'' H. Rep. accompanying 1974 Amendments to the Motor Vehicle Safety Act (1974).

[11] NHTSA recently issued its first regulation exempting motor vehicle dealers and repair businesses from the statutory prohibition against making federally-required safety equipment inoperative so that they may install retrofit manual on-off switches for air bags in vehicles owned by or used by people whose requests for switches have been approved by NHTSA. 62 FR 62406; Nov. 21, 1997.

[12] The agency believes that several factors account for this situation. First, NHTSA believes that some modifiers may be unaware of the statutory make inoperative prohibition. Others may not be aware that they should seek the agency's permission before modifying a vehicle in a way that compromises the vehicle's compliance with any of the standards. Third, some vehicle modifiers believe that their modifications do not make inoperative any device or element of design installed on or in a motor vehicle in compliance with the standards. Agency staff discussions with modifiers revealed that much of this was due to a lack of familiarity with the standards rather than poor engineering judgment. In general, NHTSA found that once modifiers understood and familiarized themselves with the standards, most modifiers exercised sound engineering judgment with respect to modifying the vehicles. For example, the agency learned that some modifiers were unaware that replacing the original steering wheel and column with horizontal steering affected the vehicle's compliance with Standard No. 203, Impact protection for the driver from the steering control system, Standard No. 204, Steering control rearward displacement, and Standard No. 208, Occupant crash protection. Some thought they had only affected compliance with Standard No. 208's air bag requirement. Thus, many modifiers only requested permission to deactivate the air bag. NHTSA is increasing its efforts to raise the level of knowledge of the standards and the make inoperative prohibition within both the disabled community and the vehicle modification industry to address this problem. Finally, some dealers and repair businesses who are aware of the need to seek permission simply ignore that requirement because they consider the requirement to write a letter for every vehicle modification onerous.

[13] The agency notes that some of these modifications did not adversely affect the vehicles' compliance with any applicable safety standards and, therefore, did not violate the make inoperative prohibition.

[14] This estimate is from the National Mobility Equipment Dealers Association (NMEDA).

[15] The majority of these requests were made in the past few years. Since all of the modifications were based on the need to accommodate a person's disability, the agency granted all of the requests.

[16] NMEDA, a professional association composed of vehicle alterers, modifiers, equipment manufacturers, occupational therapists (OTs), and driver trainers, has issued recommended practice guidelines for particular types of vehicle modifications, such as dropping a floor to accommodate a wheelchair or installing a power seat base, to assist its members in modifying vehicles safely.

[17] NHTSA notes that NMEDA has tried to address this issue by developing a Quality Assurance Program (QAP) and conducting crash tests of modified vehicles. In addition, the agency is aware that alterers who also certify vehicles built to accommodate persons with disabilities prior to their first retail sale have also performed crash tests on modified vehicles.

[18] For example, NHTSA has required manufacturers to recall adaptive equipment, investigated complaints about a modified vehicle and a hand control, participated in outside research groups concerned with modified vehicles and adaptive equipment, and researched air bag interaction with, and injury potential from, steering control devices.

[19] See for example, Standard No. 213, Child restraint systems, final rule, 51 FR 5335; February 13, 1986 and 49 CFR Part 571.213.S6.1.2.(a)(1)(I); Standard No. 222, School bus passenger seating and crash protection, final rule, 58 FR 4586; January 15, 1993 and technical amendment, 58 FR 46873; September 3, 1993; Standard No. 208, Occupant crash protection, 58 FR 11975; March 2, 1993, amended Standard No. 208 to provide manufacturers of light trucks and vans (LTVs) ''designed to be driven by persons with disabilities'' an alternative to complying with the dynamic testing requirement for manual seat belts at outboard seating positions.

the majority of vehicle modifications.[20] To this end, the agency is proposing an exemption from the make inoperative prohibition that will:

- Promote the mobility and safety of persons with disabilities by providing comprehensive, universally available guidance;
- Improve the industry's ability to assess what modifications are consistent with the statutory provision and the interests of safety;
- Improve the agency's ability to achieve its safety goals; and
- Relieve modifiers of the burden of writing a letter to the agency for each and every modification they wish to perform.

II. Proposed Exemption

A. Summary

NHTSA is proposing a limited exemption from the statutory provision prohibiting motor vehicle dealers, repair businesses and other specified commercial entities from removing or altering safety equipment or features installed pursuant to the Federal motor vehicle safety standards so as to make them inoperative. Repair businesses and dealers would be exempted from the make inoperative prohibition for the purpose of modifying motor vehicles after the first retail sale to accommodate a person with a disability. The exemption would permit modifications affecting some, but not all, standards.

B. Specifics of the Proposed Exemption

While NHTSA believes that all individuals should, to the extent possible, be provided with an equivalent level of vehicle safety, it also believes that all Americans should, to the extent possible, be provided with an equivalent level of mobility. Vehicles must often be modified to make them accessible to and usable by people with disabilities. These modifications often make features installed in compliance with the standards inoperative.

Among persons with disabilities, the type and severity of physical impairments that affect a person's ability to access and use a vehicle vary from person to person. Different impairments require different vehicle modifications.[21] Each different modification may affect a vehicle's compliance with the standards in a different way. Consequently, due to the wide range of disabilities and the various modifications needed to accommodate them, it would be difficult for the agency to attempt to develop a regulation that lists each type and level of severity of disability and that specifies the particular set of standards that may be adversely affected by the modifications suitable for each of those listed types and levels of severity of disability. Instead, the agency has decided to issue the proposed regulation, which would take a more general approach and provide modifiers with the flexibility and guidance they need to accommodate various people with disabilities while preserving the safety of the vehicle to the greatest extent possible.

For a modification to be exempt from the make inoperative prohibition, a dealer or repair business would have to meet certain conditions. The modification would be permitted to affect compliance with the standards specified, in whole or in part, below. However, the exemption would not grant permission with respect to any other standards.[22] Although it is not expressly required, the agency expects that the dealer or motor vehicle repair business would not modify the vehicle in a manner that adversely affects the vehicle's compliance with those specified standards any more than is reasonably necessary, considering cost and available technology, to accommodate the person with the disability.

The standards and portions thereof proposed for exemption are specified below:

- Standard No. 101, Controls and displays, S5.1 (a), which governs the symbols and abbreviations used for certain controls; S5.3.1, which requires illumination of certain controls when the head lights are on; S5.3.2 which governs the color of telltales; or S5.3.5 which requires cabin lighting forward of the driver's H point[23] to be able to be adjustable or turned off. The purpose of Standard No. 101 is to limit driver distraction from the driving task.
- S5.1.1.5 of Standard No. 108, Lamps, reflective devices, and associated equipment, where the vehicle is modified to be driven without a steering wheel and where it is not feasible to retain the original equipment manufacturer (OEM) turn signal lever required by S5.1.1.5. The purpose of Standard No. 108 is to ensure that roadways are illuminated, drivers can signal their intentions, and vehicles are conspicuous.
- S4(a) of Standard No. 118, Power-operated window, partition, and roof panel systems, where a remote ignition device is necessary. Standard No. 118 specifies requirements for the operation of power-operated windows, partitions, and roof panels to help prevent injury or death from a window, partition, or panel closing on a vehicle occupant (particularly children).
- S5.3.1 of Standard No. 135, Passenger car brake systems, where the foot control must be removed to accommodate a person's disability. Standard No. 135 specifies requirements for service brake and associated parking brake systems to ensure safe braking performance under normal and emergency driving conditions.
- Standard No. 202, Head restraints, where (1) a vehicle modified for a wheelchair seated driver or right front passenger and where no other seat is supplied with the vehicle for the driver or right front passenger seating position or (2) where the head restraint must be altered to accommodate a driver's impairment. To reduce the frequency and severity of neck injuries in rear-end and other collisions, Standard No. 202 requires all vehicles to be equipped with a head restraint at each front outboard seating position that meets specific size and performance requirements.
- S5.1 Standard No. 203, Impact protection for the driver from the steering control system, where the modification requires a structural change to, or removal of, the OEM steering shaft. The standard serves to reduce the likelihood and severity of head, chest, neck, and facial injuries from impact with the steering wheel.
- Standard No. 204, Steering control rearward displacement, where the modification requires a structural change to, or removal of, the OEM

[20] The agency notes that industry members, including NMEDA, and members of the disabled community have urged NHTSA to issue clearer guidance in the area of modifying vehicles for the individuals with disabilities.

[21] For example, a paraplegic may need to drop the floor of a vehicle and install a lift and hand controls to accommodate his entering the vehicle and transferring to a power seat to drive, while a person with limited range of motion in her right arm may simply need to install a knob on the vehicle's steering wheel. Another individual may need to have the right-front passenger seat removed and a wheelchair restraint installed so that he may ride in the vehicle while seated in a wheelchair.

Further, two paraplegics with similar limited range of motion could require different modifications. One individual may be able to operate the vehicle with the steering wheel originally installed by the manufacturer while another might require a smaller steering wheel to be installed. The first modification would not require removal of the air bag, the second would.

[22] For a full discussion of the standards proposed for inclusion in the exemption as well as some of the standards not proposed for inclusion, see Section II. C. of this notice.

[23] The H-point is the manufacturer's reference point for determining where the passenger's hip joint should be located for testing purposes. The hip joint's location affects the head's location.

steering shaft. The standard serves to reduce the likelihood and severity of head, chest, neck, and facial injuries due to vehicle components forcing the steering shaft rearward toward the driver in a crash.

• Standard No. 207, Seating systems, where a vehicle is modified to be driven by a person seated in a wheelchair and no other seat is supplied with the vehicle for the driver; provided, that a wheelchair securement device is installed at the driver's position. To minimize the likelihood that a seat will collapse during a collision, Standard No. 207 establishes performance, installation, and attachment requirements for seats.

• Standard No. 208, Occupant crash protection, provided that Type 2 or 2A seat belts meeting the requirements of Standard No. 209 and anchorages meeting the requirements of Standard No. 210 are installed. The purpose of Standard 208 is to reduce the number of vehicle occupant deaths and the severity of vehicle occupant injuries incurred in a collision.

• S5 (the dynamic performance requirement only) of Standard No. 214, Side impact protection, where the seat position must be changed to accommodate a person's disability. Standard No. 214's requirements serve to minimize the risk of serious and fatal injuries to vehicle occupants in side impact collisions.

Under the proposed procedure, modifiers would no longer have to seek the agency's approval before modifying a vehicle to accommodate a person with a disability. The modifier could make the necessary modifications as long as the modifications are needed to accommodate a person's disability and only affect the vehicle's compliance with the specified standards. The agency has not proposed to require modifiers to maintain records of the vehicles they modify or notify the agency of such modifications. Further, the agency has not proposed to require modifiers to affix a label to the vehicle stating that the vehicle has been modified and may no longer comply with all standards. A complete discussion of these issues and requests for comments are contained in Sections III, IV and Section V of this notice.

C. Scope of Proposed Exemption

The agency believes that compliance with certain standards is potentially often affected by the manner in which vehicle modifications are currently made for persons with disabilities. NHTSA has tried to identify those standards and determine whether they are appropriate candidates for inclusion in the proposed exemption.

In making this determination, the agency was mindful that its authority to grant exemptions from the make inoperative exemption is limited, as noted above, to those cases in which an exemption is consistent with safety. In light of the legislative history indicating that one of the intended purposes of the exemption was to accommodate persons with disabilities, NHTSA interprets this limitation as requiring that an exemption not lead to any unnecessary reduction in safety. A stricter reading of the limitation would defeat the goal of allowing those modifications necessary to facilitate the mobility needs of those persons. Although some modifications to a vehicle may result in a decrease in safety to the vehicle's occupants, without such modifications, persons with disabilities often cannot use their vehicles.

Accordingly, in developing this proposal, the agency has sought to accommodate the mobility needs of people with disabilities, while preserving safety to the extent possible. The agency is proposing to grant an exemption from the make inoperative prohibition only with respect to those standards or portions of standards requiring safety devices or features whose performance would unavoidably have to be compromised to accommodate a person's disability.

In determining whether to propose inclusion of modifications affecting devices or features installed pursuant to a particular standard, NHTSA first considered the range of specific disabilities that need to be accommodated to enable people with disabilities to operate or ride in a vehicle. Second, the agency considered what type of modifications would be necessary to accommodate such disabilities. The following table includes illustrative examples of disabilities and identifies the common vehicle modifications made to accommodate those disabilities. These items are included here only as examples and are, by no means, all inclusive.

EXAMPLES OF VEHICLE MODIFICATIONS TO ACCOMMODATE PARTICULAR DISABILITIES

For driver or passenger	Disability	Vehicle type	Modification needed
Driver	Right side hemiplegia due to stroke	Passenger car	Install a left foot accelerator.
Driver	Lower level paraplegia, multiple sclerosis, or a double leg amputee.	Passenger car	Install hand controls for brake and throttle, a spinner knob steering control device, and a wheelchair hoist to lift chair into or on top of vehicle for storage.
Driver	Lower level paraplegia, multiple sclerosis, or a double leg amputee.	Pickup truck	Install hand controls for brake and throttle, a spinner knob steering control device, a wheelchair hoist to lift chair into or on top of vehicle for storage, and a transfer seat to lift driver into seat.
Driver	Higher level paraplegia or lower level quadriplegia, a wheelchair user who does not want to lift the wheelchair in and out of a car.	Mini van	Lower floor and install a lift or ramp, hand controls (manual or power assist), a power seat base or a wheelchair tie down, a reduced diameter steering wheel, and reduced effort braking and/or steering
Driver	Higher level quadriplegia	Full-sized van	Lower floor and raise body off the suspension or raise the roof and install a lift, a wheelchair tie down, power assist hand controls or joy stick steering, and brake and throttle control.
Passenger	Higher level paraplegia or lower level quadriplegia, a wheelchair user who does not want to lift the wheelchair in and out of a car, a child with cerebral palsy.	Mini van	Lower floor and install a lift or ramp, a power seat base or a wheelchair tie down.

EXAMPLES OF VEHICLE MODIFICATIONS TO ACCOMMODATE PARTICULAR DISABILITIES—Continued

For driver or passenger	Disability	Vehicle type	Modification needed
Passenger	Lower level paraplegia, multiple sclerosis, or a child with muscular dystrophy or cerebral palsy. Passenger car.	Passenger car	Install a wheelchair hoist to lift chair into or on top of vehicle for storage.

Third, after considering the array of disabilities, NHTSA used its engineering judgment to determine tentatively which safety devices or features required by the standards might be affected by the variety of modifications needed to accommodate individuals with those disabilities. For each standard whose required device or feature might be affected by a vehicle modification, the agency considered whether modifications to enable a person with disabilities to operate or occupy a motor vehicle could be made reasonably without violating the make inoperative prohibition. Many modifications can be made without compromising a vehicle's compliance with the standards. If the agency believed that compliance could be preserved easily or with a reasonable amount of cost and effort, it did not include modifications involving that standard in the proposed exemption.

The following cases illustrate how the agency determined whether a particular modification should be exempt from the make inoperative prohibition:

Case 1. A modifier may need to replace the original vehicle floor covering with a material that is more conducive to the motion of a wheelchair's wheels. With a minimum amount of effort, the original floor covering can be replaced with a material that preserves the vehicle's certification to Standard No. 302, Flammability of interior materials. Thus, NHTSA did not propose to include Standard No. 302 in the proposed exemption.

Case 2. A modifier may have to remove the driver's seat and install wheelchair restraints to enable a quadriplegic to drive from a wheelchair. Since Standard No. 207, Seating systems, requires that a driver's seat be installed in the vehicle, removing the driver's seat would violate the make inoperative prohibition. Since the only way the person could drive is from a wheelchair, NHTSA tentatively determined that the modification was necessary and that an exemption would, therefore, be appropriate.

Case 3. A modifier may have to lower the floor of the vehicle to accommodate a person with a disability. Lowering the floor may require relocating the vehicle's fuel tank which could affect the vehicle's compliance with Standard No. 301, Fuel system integrity, which sets performance requirements for fuel systems in crashes. The agency determined that it is possible to make the modification without compromising compliance with the standard. The agency determined that permitting a modifier to compromise compliance with the standard was unacceptable since it could unnecessarily expose occupants to an increased risk of fire.

Following is a discussion of the standards the agency believes are appropriate candidates for the exemption and those it believes are inappropriate. The discussion addresses only those standards the agency believes might be affected by common vehicle modifications. The following standards will *not* be discussed and are *not* recommended for exemption because the agency believes there are no common vehicle modifications that should affect the vehicles, vehicle systems, or equipment to which they apply:

Standard No. 106, Brake hoses
Standard No. 109, New pneumatic tires
Standard No. 110, Tire selection and rims
Standard No. 114, Theft protection
Standard No. 116, Motor vehicle brake fluids
Standard No. 117, Retreaded pneumatic tires
Standard No. 119, New pneumatic tires for vehicles other than passenger cars
Standard No. 120, Tire selection and rims for vehicles other than passenger cars
Standard No. 122, Motorcycle brake systems
Standard No. 123, Motorcycle controls and displays
Standard No. 125, Warning devices
Standard No. 129, Non-pneumatic tires for passenger cars
Standard No. 131, School bus pedestrian safety devices
Standard No. 205, Glazing materials
Standard No. 212, Windshield mounting
Standard No. 213, Child restraint systems
Standard No. 217, Bus emergency exits and window retention and release
Standard No. 218, Motorcycle helmets
Standard No. 219, Windshield zone intrusion
Standard No. 220, School bus rollover protection
Standard No. 221, School bus body joint strength
Standard No. 222, School bus passenger seating and crash protection
Standard No. 223, Rear impact guards
Standard No. 224, Rear impact protection
Standard No. 304, Compressed natural gas fuel container integrity

1. Standards for Which Permission Would Be Granted To Make Safety Features Inoperative

a. Standard No. 101, Controls and displays. The purpose of Standard 101 is to limit driver distraction from the driving task. The standard does not require or prescribe exact locations or methods of operation for any control or display. The standard does, however, require that if certain controls are provided, they ''shall be operable by the driver'' and that if certain displays are furnished, they ''shall be visible to the driver.'' The standard also directs that the driver be restrained for testing and lists which controls must be illuminated when the vehicle's headlights are on.

Controls and displays, as well as the driver's seating position, are often moved when a vehicle is modified. These changes create the potential to take the vehicle out of compliance with 49 CFR 571.101 in three ways. First, controls or displays may be moved to a position that is not visible to the driver when the driver is looking forward (e.g. switches may be moved to a door mounted touch panel to be operated by the driver's elbow, or switches may be mounted in a head rest). Second, a change in the driver's seating position may result in the driver's inability to see or reach an OEM control or display. Finally, changing the restraint system can make it impossible to comply with section 6 of the standard which requires the driver to be restrained pursuant to the requirements of Standard No. 208, Occupant Crash Protection. The agency believes that such changes do not create a safety problem since the purpose of the modification is to make as many functions as possible operable by the disabled driver.

NHTSA is aware that other drivers may occasionally use the modified

vehicle; however, the agency does not believe this presents a serious problem. The vehicle is primarily designed for the disabled person and that individual will be accustomed to the availability and placement of controls and displays in his or her vehicle. The controls can still be placed in a way that minimizes any potential distraction for the driver with a disability. NHTSA believes that most of the vehicles will be driven by someone other than the disabled driver only infrequently. For these reasons, NHTSA believes a limited exemption from the make inoperative exemption for Standard No. 101 is appropriate. NHTSA does not believe that an exemption would be appropriate from S5.1(a), which governs the symbols and abbreviations used for certain controls; S5.3.1, which requires illumination of certain controls when the head lights are on; S5.3.2 which governs the color of telltales; or S5.3.5 which requires cabin lighting forward of the driver's H point[24] to be able to be adjustable or turned off.

b. Standard No. 108, Lamps, reflective devices, and associated equipment. The purpose of Standard No. 108 is to ensure that roadways are illuminated, drivers can signal their intentions, and vehicles are conspicuous. NHTSA is aware of only two situations in which common vehicle modifications could take the vehicle out of compliance with 49 CFR § 571.108. NHTSA believes the make inoperative exemption is necessary for only one of the modifications; the other modification can be performed in a way that preserves the vehicle's compliance with the standard.

The agency believes that vehicles that are modified so that they no longer have a steering wheel cannot conform to S5.1.1.5, which requires turn signals to be self-canceling by the steering wheel rotation. Although NHTSA believes that such cases are rare, the agency believes that such a modification cannot be made without taking the vehicle out of compliance with Standard No. 108. Other modifications to the self-canceling feature of the turn signal are made without removing the steering wheel. For example, touch pads that control the vehicle's turn signals can be installed without removing the steering wheel. Some touch pad actuated turn signals are canceled by a timer, not the steering wheel rotation. In all cases known to NHTSA where a touch pad is installed to control the vehicle's turn signals and the steering wheel is not removed, the OEM turn signal lever and canceling feature is retained on the vehicle. Since the OEM turn signal lever and canceling feature is retained on the vehicle, the modification would not compromise the compliance of the OEM equipment provided to meet S5.1.1.5.

The standard requires the installation of a center high-mounted stop lamp (CHMSL) and specifies its location. 49 CFR §§ 571.108, S5.1.1.27, S5.3.1.8(a). Certain vans which require the installation of a raised roof to accommodate a wheelchair seated occupant will require the CHMSL to be moved. NHTSA believes that the CHMSL can be reinstalled in a way that preserves the vehicle's compliance with Standard No. 108. NHTSA is unaware of any situations in which this cannot be done. For example, sometimes in a van conversion rear doors must be lengthened when a raised roof is installed. If the van originally had one CHMSL above the doors, the lengthened doors could be retrofitted with two CHMSLs pursuant to S5.1.1.27(b) of the standard.[25]

NHTSA believes a make inoperative exemption from S5.1.1.5 of Standard No. 108 is appropriate only where a vehicle is modified to be driven without a steering wheel and where it is not feasible to retain the OEM turn signal lever. NHTSA seeks comment on whether there are cases in which the OEM turn signal actuating device and function is not retained for the use of drivers *other* than the driver for whom the vehicle was modified. If such cases exist, do the substitute turn signal controls installed for the driver with a disability have the self-canceling feature required by Standard No. 108 S5.1.1.5? Do they have some self-canceling feature other than steering wheel rotation?

c. Standard No. 118, Power-operated window, partition, and roof panel systems. Standard No. 118 specifies requirements for the operation of power-operated windows, partitions, and roof panels to help prevent injury or death from a window, partition, or panel closing on a vehicle occupant (particularly children). NHTSA knows of only one situation where a modification would take the vehicle out of compliance with Standard No. 118. Disabled persons who have trouble maintaining a constant body temperature (*e.g.* quadraplegics and burn victims) and live in very cold or very hot climates use a remote control ignition device so that the occupant compartment can be warmed or cooled before they enter. Section 4(a) of the standard requires that before a power operated window, partition, or roof panel system can be closed, the key that activates the vehicle's engine must be in the ''ON', 'START', or 'ACCESSORY' position.'' In the modified vehicle under discussion here, the vehicle is running when the person enters, hence the person has control of the power operated windows even though there is no key in the ignition. Thus, NHTSA believes make inoperative exemption from S4(a) of Standard No. 118 is appropriate where a remote ignition device is necessary to accommodate a disability.

d. Standard No. 135, Passenger car brake systems. Standard No. 135 specifies requirements for service brake and associated parking brake systems to ensure safe braking performance under normal and emergency driving conditions.[26] The addition of some sort of hand control to the OEM system—usually a system that attaches in some manner to the brake pedal—is the most common modification made to any brake system for a driver with a disability. Normally these systems maintain the OEM brake control. Also common are modifications made to the level of effort (pressure) required of the driver to operate the brake. Such modifications are known as low-effort and zero-effort braking and increase the amount of power assist to the driver. Low-effort and zero-effort braking is accomplished by reworking the OEM power brake system. Most of these modifications preserve the OEM foot pedal and affect only the method of actuation of the braking system. The agency believes that some, relatively

[24] The H-point is the manufacturer's reference point for determining where the passenger's hip joint should be located for testing purposes. The hip joint's location affects the head's location.

[25] S5.1.1.27(b) of Standard No. 108 provides that: ''Each multipurpose passenger vehicle, truck and bus whose overall width is less than 80 inches, whose GVWR is 10,000 pounds or less, whose vertical centerline, when the vehicle is viewed from the rear, is not located on a fixed body panel but separates one or two movable body sections, such as doors, which lacks sufficient space to install a single high-mounted stop lamp on the centerline above such body sections, and which is manufactured on or after September 1, 1993, shall have two high mounted stop lamps which:

(1) Are identical in size and shape and have an effective projected luminous area not less than 2¼ inches each.

(2) Together have a signal to the rear visible as specified in paragraph (a)(2) of this S5.1.1.27.

(3) Together have the minimum photometric values specified in paragraph (a)(3) of this S5.1.1.27.

(4) Shall provide access for convenient replacement of the bulbs without special tools. 49 CFR § 571.108, S5.1.1.27(b).

[26] Until August 31, 2000, manufacturers of passenger cars may elect to comply with Standard No. 135 instead of Standard No. 105, Hydraulic Brake Systems, Passenger cars manufactured on or after September 1, 2000 will have to comply with Standard No. 135.

uncommon, modifications may require removal of the OEM foot pedal. For example, a disabled person who experiences involuntary muscle spasms in his legs may have to have the OEM foot control removed to prevent him from inadvertently activating the vehicle's brake during a spasm. S5.3.1 of Standard No. 135 specifies that the service brakes be activated by a foot control. Consequently, NHTSA has tentatively concluded that exemption from S5.3.1 of Standard No. 135 may be appropriate in those situations where the foot pedal must be removed to accommodate a person's disability. NHTSA seeks comment on whether its tentative conclusion is correct. Are there disabilities which require removal of the OEM foot pedal? The agency also seeks comment from the vehicle manufacturers, hand control manufacturers, vehicle modifiers, those who adapt power brake systems, and users, as to whether there are brake modifications that incapacitate the OEM brake controls and would affect the vehicle's performance in any of the required tests. Specifically, does any joy stick driving control prevent the use of the OEM brake pedal or affect the vehicle's potential to perform the braking tests? Does increasing the power assist to the brakes affect the vehicle's potential to perform the braking test? The agency also seeks comment as to whether there are modifications made to the accelerator control that do not preserve the OEM performance and function.

e. Standard No. 202, Head restraints. To reduce the frequency and severity of neck injuries in rear-end and other collisions, Standard No. 202 requires each front outboard seating position in all vehicles to be equipped with a head restraint that meets specific size and performance requirements. Vehicles may be modified to accommodate a wheelchair seated driver or right front seat passenger. Such a modification requires the removal of the OEM seat and, as a consequence, the head restraint. NHTSA is aware that some wheelchairs are equipped with head rests or positioning devices and that some vehicles modified to be driven by wheelchair seated drivers are equipped with swing-away head rests. Although the agency does not know for certain, it doubts that the head rests installed on some wheelchairs or the swing away head rests attached to vehicles comply with Standard No. 202. Thus, NHTSA believes that compliance with Standard No. 202 may be compromised when the OEM seat is permanently removed to accommodate a wheelchair-seated occupant at either of the front outboard seating positions.

In addition to the case of a wheelchair seated occupant, NHTSA knows of another modification that could make Standard No. 202 inoperative. Some drivers (such as a driver with poor peripheral vision) may need to alter the size of their vehicle's head restraint so it no longer interferes with their ability to see rearward over their shoulders.[27] Reducing the size of the head restraint could affect the vehicle's compliance with Standard No. 202 in a variety of ways. If the head restraint is altered so that the remaining height of the head restraint is less than 27.5 inches above the seating reference point, the remaining width is less than 10 inches on a bench seat, or the remaining width is less than 6.75 inches on an individual seat,[28] the vehicle may no longer comply with the requirements of Standard No. 202. Even smaller reductions in the size of a head restraint affect the head restraint's ability to meet the performance requirements of S4.3 of Standard No. 202.

In light of the above, NHTSA believes an exemption from the make inoperative prohibition with regard to Standard No. 202 is warranted in two situations only. First, where the OEM seat is permanently removed so that only a wheelchair seated driver or right front passenger can occupy either or both front outboard seating positions. If the vehicle is modified to have a detachable driver or right front passenger seat, the detachable seat must comply with Standard No. 202.[29] If an OEM driver or passenger seat is supplied with the vehicle, that seat must comply with Standard No. 202. Second, an exemption would be warranted if the head restraint must be altered to accommodate a driver's disability. NHTSA solicits comment on whether the head rests used on some wheelchairs would meet Standard No. 202's requirements.

f. Standard No. 203, Impact protection for the driver from the steering control system and Standard No. 204, Steering control rearward displacement. Standard No. 203 and Standard No. 204 serve to reduce the likelihood and severity of head, chest, neck, and facial injuries due to contact with the steering wheel. Standard No. 203 requires (1) that the impact force developed on a chest body block impacting the steering wheel at 15 mph be less than 2,500 pounds in a three millisecond interval,[30] and (2) that no steering control system components catch the driver's clothing or jewelry. The standard does not apply to vehicles that conform to S5.1, Standard No. 208 (i.e., air bag requirements). Standard No. 204 requires that the upper end of the steering column [31] be displaced less than five inches when the vehicle impacts a fixed full frontal barrier at 30 mph.

These two standards assume that the vehicle uses the type of steering system typically installed in a vehicle: the steering column longitudinal axis points toward the driver and a steering wheel, mounted at the end of the column, is used by the driver to steer the vehicle. Vehicles modified to be driven by persons with disabilities do not always have such steering systems. Some individuals with disabilities require alternative steering systems such as joystick steering (usually mounted to one side of the driver), horizontal steering (the column points toward the driver, but the face plane of the steering wheel is parallel to the column), foot steering, or the Scott steering system to accommodate their particular disability.[32] In addition, extensions are sometimes added to the OEM steering shaft to allow a wheelchair seated driver to sit further back in the vehicle than the OEM shaft will allow (usually because his or her wheelchair will not fit into the area reachable by the OEM system).

The agency would like to point out the difference between the steering ''shaft'' and the steering ''column''. While the words ''steering column'' are often used in everyday conversation when referring to the system consisting of the steering shaft, covered by the steering column, S3 of Standard 204 specifically defines the steering shaft as ''a component that transmits steering torque from the steering wheel to the steering gear,'' while the steering column is ''a structural housing that surrounds a steering shaft.'' It is the agency's intent to discriminate between fairly minor modifications that may

[27] See, e.g., Letter from Ms. Jessie Flautt, to Chief Counsel in 1991, requesting permission to cut the width of a head restraint for a driver with poor peripheral vision.

[28] 49 CFR Part 571.202 S4.3(b)(1) and (2), respectively.

[29] In most instances when a vehicle is modified to allow a person to drive from a wheelchair, an additional driver's seat and a means for attaching the seat to the vehicle floor are provided. An attachable passenger's seat is also usually provided.

[30] Essentially, this requires that the steering column must have an energy absorbing feature.

[31] Steering shaft means a component that transmits steering torque from the steering wheel to the steering gear. Steering column means a structural housing that surrounds a steering shaft. 49 CFR Part 571.204, S3.

[32] The Scott steering system is similar to the steering system used on airplanes and is used primarily by quadraplegics.

involve attaching equipment to the steering column, or cutting away a portion of that housing, from more serious modifications that require a change to the component that connects the driver control to the steering gear, because it is the steering shaft that is most likely to transmit crash loads from the engine compartment of the vehicle to the driver. Therefore, NHTSA believes that a person modifying a vehicle for a person with disabilities should preserve the vehicle's certification with respect to the requirements of Standard Nos. 203 and 204 except when a modification requires a structural change to, or removal of, the original steering *shaft*. NHTSA does not believe that the simple addition of a piece of adaptive equipment (AE), such as a hand control, to the steering column constitutes a change to the steering shaft. The agency requests comment on whether the following modifications can be performed in a manner that preserves the vehicle's compliance with Standard No. 204's steering column displacement requirements: (1) the extension of the steering shaft, (2) the installation of horizontal steering, or (3) the installation of mechanical hand controls. The agency also seeks comment on whether there are modifications which require changes to the steering column, without a change to the steering shaft, and which can *only* be made in a way that would affect the vehicle's compliance with S5.1 of Standard No. 203 or with Standard No. 204.

g. Standard No. 207, Seating systems. To minimize the likelihood that a seat will collapse during a collision, Standard No. 207, Seating systems establishes performance, installation, and attachment requirements for seats. The standard requires vehicles to be equipped with a driver's seat and requires all seats installed in a vehicle to both withstand and remain in their adjusted position when certain loads are applied in various directions to the seats. The standard also requires folding seats to be equipped with a restraining device and a release mechanism. NHTSA knows of only one vehicle modification in which certification to Standard No. 207 cannot be maintained—the permanent removal of the driver's seat so that the vehicle can be driven by a driver seated in a wheelchair. In most instances when the driver for whom the vehicle is modified is sitting in a wheelchair, an additional driver's seat and a means for attaching the seat to the vehicle floor are provided. This seat and the attachment mechanism should conform to the requirements of Standard No. 207; NHTSA knows of no reason why it cannot.

NHTSA believes that only a limited exemption from Standard No. 207 is appropriate. Wheelchairs and other non-automotive seats are not designed to withstand loads and remain in position during a collision. NHTSA believes that only vehicles modified to be driven by a person seated in a wheelchair and that are equipped with a wheelchair securement device should be exempt from compliance with Standard No. 207. The exemption would not apply to any vehicle equipped with a detachable driver's seat; in that case, the detachable seat would have to comply with the standard's requirements.

The agency is aware that some commenters may argue that the installation of a six-way power seat base (allowing a wheelchair user to transfer to the OEM driver's seat) requires exemption from Standard No. 207. NHTSA disagrees. The agency believes that it is reasonable and practicable to attach these seat bases to a vehicle in a manner that would not compromise a vehicle's compliance with Standard No. 207. Thus, NHTSA believes that an exemption from the make inoperative prohibition for the installation of a power seat base is inappropriate.

h. Standard No. 208, Occupant crash protection. The purpose of Standard No. 208 is to reduce the number of vehicle occupant deaths and the severity of vehicle occupant injuries in a crash. The standard requires vehicles to be equipped with specific manual and automatic restraint systems (*e.g.* seat belts and air bags) and to meet specified injury criteria during a crash test.[33] Many vehicle modifications could affect a vehicle's compliance with this standard. The agency has tried to determine how various modifications might affect a vehicle's compliance with the standard. NHTSA knows that some types of modifications unavoidably affect a vehicle's compliance with Standard No. 208. For example, any modification that requires the removal of the OEM steering wheel, and hence the driver air bag, affects the vehicle's compliance with Standard No. 208. In addition, any modification to the seat which requires removing an air bag sensor located under the seat compromises a vehicle's compliance with the standard. Based on the results of testing, NHTSA knows of other modifications that will not affect a vehicle's compliance with the standard. For example, the results of a crash test conducted at the University of Virginia indicate that raising the body off the frame or lowering the floor of a full size van will not compromise a vehicle's compliance with Standard No. 208, at least for a driver seated in a modified OEM seat.[34] In addition, NHTSA believes that the simple attachment of a steering control device on the OEM steering wheel will not affect a vehicle's compliance with Standard No. 208.[35]

The agency is also aware that there are some modifications which may take a vehicle out of compliance with Standard No. 208. For example, nearly every modification to the occupant compartment forward of the B pillar could compromise a vehicle's compliance with Standard No. 208. At this point in time, the agency lacks the data or test results needed to determine whether some modifications affect a vehicle's compliance with Standard No. 208.[36] For example, the agency does not know if cutting the knee bolster to accommodate the push rods in a standard set of mechanical hand controls affects the vehicle's ability to meet the injury criteria in a crash. The agency is also uncertain whether cutting the vehicle floor to install a power pan in the driver's area or whether cutting the roof adversely affects the vehicle's structural response in a crash to the point that Standard No. 208's criteria can no longer be met. Finally, NHTSA does not know whether removing pretensioners during a modification of the belt system makes it impossible to meet the criteria of Standard No. 208.

In light of the standard's complexity and the uncertainty concerning the effect of some modifications on a vehicle's compliance with Standard No. 208, NHTSA believes that exemption from the make inoperative prohibition for Standard No. 208 should be granted for any modification necessary to accommodate a disability, provided the

[33] Passenger cars and light trucks and vans with a curb weight of 5,500 pounds or a Gross Vehicle Weight Rating (GVWR) of 8,500 pounds or less are required to be equipped with air bags at both front outboard seating positions. Heavier vehicles are not required to have air bags at both front outboard seating positions and may instead be equipped with a belt system.

[34] University of Virginia, Automobile Safety Laboratory crash test of Ford E150 van for NMEDA.

[35] ''Air Bag Interaction with and Injury Potential from Common Steering Control Devices,'' final report DOT–HS–808–580, Nov. 1996; Pilkey *et al.* Univ. of Virginia Automobile Safety Lab.

[36] The fact that OEMs refuse to pass through certification for Standard No. 208 in any case where the vehicle is changed forward of the B-pillar indicates the difficulty of knowing whether certain modifications will affect a vehicle's compliance with Standard No. 208. In addition, the OEMs instruct modifiers not to place any equipment in the air bag deployment zone.

modifier installs Type 2[37] or Type 2A[38] belts that comply with Standard No. 209, and provided the belt anchorages comply with Standard No. 210. The agency notes, however, that the exemption would not apply in any situation where compliance with the standard could be preserved and a person's disability could be accommodated by the installation of an air bag on-off switch. NHTSA seeks comment from drop floor minivan alterers on whether they have been able to certify their vehicles to Standard No. 208 since September 1, 1997 (the date the section 4.2 exclusion expired). The agency also seeks comment from hand control manufacturers as to whether they believe OEM components installed to meet Standard No. 208 (*e.g.* knee bolsters) are made inoperable by the installation of their controls. The agency seeks comments from modifiers on how, how often, and why they must disable seat pretensioners.

i. Standard No. 214, Side impact protection. Standard No. 214's requirements serve to minimize the risk of serious and fatal injuries to vehicle occupants in side impact collisions. The standard specifies injury criteria to be measured during a crash test and sets strength requirements for doors. With respect to the dynamic performance requirement of Standard No. 214, NHTSA believes that an exemption from the make inoperative prohibition is warranted for cases in which the seat position must be changed to accommodate a person's disability. The agency discovered during the course of the development of the test procedure for the side impact crash test that data indicating injury to the dummy will be affected by seat height, fore/aft position, and the distance between the dummy and the door interior surface. (The use of occupant restraints, however, did not affect the test results significantly.) The agency requests comments on whether OEMs or modifiers believe there are modifications, other than those that change the seat position, that would affect the vehicle's compliance with S5 of Standard No. 214. NHTSA does not believe there are any modifications which would necessarily reduce door strength to an extent that the strength requirement of Standard No. 214 could not be met. Thus, NHTSA does not believe a make inoperative exemption is warranted for that portion of the standard. NHTSA requests comment on whether OEMs or modifiers believe there are modifications which must be done in a manner that necessarily compromises door strength.

2. Standards for Which Permission Would Not Be Granted To Make Safety Features Inoperative

a. Standard No. 102, Transmission shift lever sequence, starter interlock, and transmission braking effect. Standard No. 102 requires automatic transmissions to have: (1) a specified transmission shift lever sequence, (2) a starter interlock, and (3) at least one forward drive transmission position that provides a greater degree of engine braking than the highest speed transmission ratio (i.e. one low gear). To accommodate certain disabilities, some modifications are made to the method by which the vehicle is started and the transmission gear is selected. A common modification is the attachment of an extension lever to the column-mounted gear selection lever in a passenger car to permit left-handed gear selection. NHTSA is unaware of any modification which would need to change the transmission gear selection sequence, disable the starter interlock, or disable the lower forward drive gear ratios so there is no longer a low gear. Thus, NHTSA does not believe a make inoperative exemption for Standard No. 102 is appropriate. NHTSA solicits comment on whether modifications to the method by which the vehicle is started and the transmission gear is selected are necessary to accommodate a person with a disability.

b. Standard No. 103, Windshield defrosting and defogging systems, and Standard No. 104, Windshield wiping and washing systems. Standard No. 103 and Standard No. 104 specify requirements for the area of the windshield that must be cleared by the defrosting and defogging and windshield wiping and washing systems, respectively. Vehicle modifications commonly result in the relocation of switches and a reduction in the features normally available to the driver while the vehicle is in motion. For example, if the OEM provides three or four wiper speeds on a dial control, a disabled driver who needs a touch pad or other switch panel may have access to only two speeds. However, neither this situation nor any other modification to these systems that NHTSA knows of are violations of the make inoperative prohibition since the minimum requirements of the standard are met. The agency is unaware of any reason why a modification would affect the performance level of these systems to the extent that the vehicle no longer complied with these standards. NHTSA, therefore, does not believe an exemption for Standard No. 103 or Standard No. 104 is appropriate.

c. Braking Standards. Standard No. 105, Hydraulic brake systems and Standard No. 121, Air brake systems govern the performance of various braking systems in different types of vehicles. Standard No. 105 applies to multipurpose passenger vehicles (MPVs), trucks, buses and passenger cars (manufactured before September 1, 2000) with hydraulic brake systems. Standard No. 121 applies to trucks, buses and trailers equipped with air brake systems. Manufacturers of passenger cars may elect to comply with Standard No. 135 instead of Standard No. 105 until August 31, 2000.[39] All of these standards help ensure safe vehicle braking performance in normal and emergency driving situations.

The most common modification to any brake system when adapting a vehicle to be driven by a person with a disability is the addition of some sort of hand control to the OEM system—usually a system that attaches in some manner to the brake pedal. Normally these systems maintain the OEM brake control. Also common are modifications to the level of effort (pressure) required of the driver to operate the brake. These modifications are called low-effort and zero-effort braking and increase the amount of power assist to the driver. This is accomplished by reworking the OEM power brake system. Since these modifications are only to the method of actuation and in most cases preserve the OEM foot pedals, NHTSA does not believe that these modifications take a vehicle out of compliance with any part of these braking standards. Unlike Standard No. 135, Standard Nos. 105 and 121 do *not* specify that the service brakes be activated by a foot control. Therefore, NHTSA does not believe that make inoperative exemption for Standard Nos. 105 and 121 is warranted. The agency seeks comment from the vehicle manufacturers, hand control manufacturers, vehicle modifiers, those who adapt power brake systems, and users, as to whether there are brake modifications that incapacitate the OEM brake controls and would affect the vehicle's performance in any of the required tests. Specifically, does any joy stick driving control prevent the use of the OEM brake pedal or affect the vehicle's potential to perform the braking tests? Does increasing the power assist to the brakes affect the vehicle's potential to perform the braking test?

[37] An integrated lap and shoulder belt.

[38] A separate lap and shoulder belt.

[39] Passenger cars manufactured on or after September 1, 2000 will have to comply with Standard No. 135. See discussion of Standard No. 135 in Section II, C, 1, d above.

The agency also seeks comment as to whether there are modifications made to the accelerator control that do not preserve the OEM performance and function.

d. Standard No. 111, Rearview mirrors. To ensure that drivers have a clear and unobstructed view to the rear of the vehicle, the standard specifies the location, field of view, magnification and labeling of rearview mirrors on all vehicles. While mirrors are relocated, extra mirrors added, or larger mirrors substituted for the OEM when vehicles are modified for persons with disabilities, NHTSA does not believe these modifications should affect the vehicles' certification to Standard No. 111. Since there should be no situation in which non-compliance with the standard is necessary or advised, NHTSA is not proposing a make inoperative exemption from Standard No. 111.

e. Standard No. 113, Hood latch systems. Standard No. 113 requires that cars, MPVs, trucks and buses have a second latch position on the hood latch system to prevent the hood from unlatching, opening and blocking a driver's view through the windshield. NHTSA is not aware of any modifications that are made to hood latch systems when a vehicle is modified to accommodate a person with a disability. NHTSA is aware that a modification to the method of unlatching might be necessary to allow a person with reduced range of motion or strength, or seated in a wheelchair to open the hood. NHTSA does not believe, however, that a modification to the method of unlatching would require the elimination of the second latch position; thus, the agency does not believe a make inoperative exemption for Standard No. 113 is warranted. The agency seeks comment on whether there are modifications that would require eliminating the second latch position.

f. Standard No. 124, Accelerator control systems. Accelerator control systems is intended to help prevent runaway acceleration of vehicles. The standard requires a vehicle's throttle to return to its idle position when the driver withdraws all force from the accelerator control or when there is a disconnection in the accelerator system between the control and the engine. The vehicle modification situation with respect to Standard No. 124 is directly analogous to the previous discussion of the braking standards. Most modifications to the accelerator system involve the addition of hand operated controls to the OEM system. NHTSA does not believe, therefore, that the vehicle is taken out of compliance with the standard as long as the OEM performance and function are preserved. Thus, NHTSA does not believe an exemption for Standard No. 124 is justified. The agency seeks comment from the vehicle manufacturers, hand control manufacturers, vehicle modifiers, those who adapt acceleration systems, and users, as to whether there are accelerator modifications that incapacitate the OEM accelerator controls and would affect the vehicle's performance in any of the required tests. Are there modifications made to the accelerator control that do not preserve the OEM performance and function?

g. Standard No. 201, Occupant protection in interior impact. The purpose of this standard is to protect vehicle occupants from serious injury from impacts with interior components in a collision. The certification of a vehicle to the current standard would most likely be affected, if at all, through the installation of adaptive equipment (AE) for secondary controls. Special switches or touch pads are often installed to allow a person to reach and operate the controls for power windows, washer/wipers, and headlights. These controls can be mounted almost anywhere: on the side door panel, the arm rest, the front instrument panel, or the windshield header. It does not appear that these controls are large, heavy or rigid enough to cause significant injury upon occupant impact, although they may inflict lacerations. NHTSA seeks comments from OEMs and modifiers on whether or not the addition of adaptive equipment and devices, such as hand controls or knobs, affect the results of tests required by 49 CFR 571.201, S5.1, ''Instrument Panels''?

NHTSA believes, however, that there may be a problem with van conversions for wheelchair-seated drivers when the new requirements for impact testing to the upper interior components become effective. The extra padding needed on the windshield header to comply with the new requirements may interfere with a driver's line of sight, since a wheelchair-seated driver sits higher above the vehicle floor than a driver using an OEM seat. NHTSA believes this could be accommodated by lowering the floor in the driver area; the agency is aware that this will not be a solution for everyone. Those drivers who are very tall, or for whom the floor cannot be lowered enough, may need to have sections of padding on the header removed. Also, it may be much safer to remove padding from the header than to lower the floor of the vehicle further than would be necessary if the header were not padded. NHTSA seeks comments from OEMs on how they expect upper interior components to change under the new requirements. Specifically, if the eye ellipse of a wheelchair-seated driver is higher than that of a 95th percentile male, will increased padding or other design changes affect that driver's line of sight?

h. Standard No. 206, Door locks and door retention components. To minimize the likelihood that vehicle occupants will be ejected from a vehicle during a crash, Standard No. 206, Door locks and door retention components, requires hinged doors to have latches with two positions: fully latched and secondarily latched. The latch and striker must not separate under certain longitudinal, transverse, and inertial load and the door hinges must not separate under certain longitudinal and transverse loads. The standard also specifies that track and slide combinations on sliding doors must not separate under a 4,000 pound transverse load. The standard also requires vehicles to have door locks operable from the interior of the vehicle. Standard No. 206 excludes ''* * * side doors which are equipped with wheelchair lifts and which are linked to an alarm system.'' The agency has granted a petition asking to expand this exclusion to side doors fitted with ramps.[40] This action by the agency does not mean that the action desired by the petitioner will be taken, only that NHTSA will examine the issue.

Several vehicle modifications have the potential to affect door closures and the doors' ability to remain closed during impact. Examples include electrically operated door openers for both hinged and sliding doors and lengthened doors that are sometimes installed when the vehicle roof is raised. Standard 206 is crucial in preventing the ejection of occupants in a crash. NHTSA has no compelling evidence that the OEM door latching mechanism cannot be preserved, or its equivalent installed, in the course of door modifications. Therefore, NHTSA does not believe exemption from the make inoperative prohibition for Standard No. 206 is justified. The agency also solicits comment on whether door latching and locking mechanisms *must be* disabled or changed in the course of vehicle modifications in a manner that takes them out of compliance with Standard No. 206, Door locks and door retention components.

i. Standard No. 209, Seat belt assemblies. This standard sets out requirements for seat belt assemblies as items of motor vehicle equipment.

[40] 61 FR 27325; May 31, 1996.

NHTSA is not proposing exemption from the make inoperative prohibition since the agency sees no reason why modifiers cannot use Standard No. 209-compliant systems.

j. Standard No. 210, Seat belt assembly anchorages. Standard No. 210 is a vehicle standard that establishes strength and location requirements for seat belt assembly anchorages. The requirements ensure that the belt loads during a crash are transferred to the skeleton of the occupant and not to the occupant's soft tissue. The standard also ensures that the restraint anchorages are strong enough to withstand the force of a crash. Compliance with the criteria is fairly simple to measure. Traditionally, NHTSA has said that a vehicle may comply with Standard No. 210 as manufactured or as modified. The agency does not believe, therefore, that exemption from make inoperative with respect to Standard No. 210 is necessary. If belt anchorages are moved, or otherwise modified, to accommodate a person with a disability, NHTSA believes measurements, calculations, or engineering judgement can be used to ensure that Standard No. 210 is met in the new position.

k. Standard No. 216, Roof crush resistance. The purpose of Standard No. 216 is to reduce the number of deaths and injuries caused by a roof crushing into the vehicle during a rollover. The standard establishes static strength requirements for both car and LTV roofs. A common modification that could compromise a vehicle's certification to this standard is the installation of a raised roof (most often made of fiberglass). The agency believes that modifiers almost always, if not exclusively, achieve this roof modification by purchasing a replacement roof from a roof manufacturer and installing the new roof according to the roof manufacturer's instructions. NHTSA believes that the roof manufacturer should be able to provide guidance to the vehicle modifier on the strength of the roof and the vehicle make/models for which installation of that roof is appropriate. The agency does not believe that it is necessary for a raised roof to be installed in a manner that takes a vehicle out of compliance with Standard No. 216. NHTSA invites roof manufacturers and vehicle modifiers to comment on whether there are raised roofs which *must* be installed in a way that adversely affects the vehicle's compliance with Standard No. 216, Roof crush resistance, or if there are instances in which a raised roof is achieved by some method other than installing a replacement roof.

l. Standard No. 301, Fuel system integrity and Standard No. 303, Fuel system integrity of compressed natural gas vehicles. To reduce deaths and injuries occurring from fires caused by leaking fuel during and after a crash, Standard No. 301, Fuel system integrity and Standard No. 303, Fuel system integrity of compressed natural gas vehicles set performance requirements for fuel systems in crashes. Preserving fuel system integrity in a crash to prevent occupant exposure to fire is extremely important to all persons, but perhaps even more so for persons with disabilities since they often require more time to exit a vehicle.

Vehicle certification to Standard No. 301 can be compromised when the fuel tank, supply lines, and filler neck are moved in the process of lowering the floor of a van or minivan. NHTSA believes it is essential for safety that anyone working on a motor vehicle place a tank in such a way that it is not subject to impact by the sharp edges of the vehicle's structures, that fuel lines are not routed near hot surfaces, and that the fuel filler neck is not installed in such a way that it will separate from the tank, or be sheared off in a collision. In addition, NHTSA is aware of one tank manufacturer who has demonstrated that when its tank was correctly installed in the rear of a 1992 Ford E150 with a lowered floor and raised body, the vehicle met the performance requirements of Standard No. 301. The points discussed under Standard No. 301 are applicable to Standard No. 303, Fuel system integrity of compressed natural gas vehicles. NHTSA, therefore, believes strongly that a make inoperative exemption for Standard No. 301 and Standard No. 303 is not justified.

m. Standard No. 302, Flammability of interior materials. To reduce the occurrence of deaths and injuries to vehicle occupants from fire, especially those which originate in the vehicle's interior, Standard 302, Flammability of interior materials specifies that any material within one-half inch of the occupant compartment air space shall not ''burn, nor transmit a flame front across its surface, at a rate of more than four inches per minute.'' Materials meeting this standard are readily available and the test procedure described in the standard is fairly simple.

There are many modifications which have the potential to compromise a vehicle's certification to Standard No. 302. One example is the replacement of OEM carpet in vans with a surface which is easier for wheelchairs to roll on. Carpet may also be replaced in the process of lowering a floor. Some vehicle modifiers have told NHTSA staff that they do not use OEM materials when making changes because these materials are much more expensive than others more commonly available.

The agency believes that fire safety for persons with disabilities should not be compromised during vehicle modification. Even if OEM materials are not used, modifiers can employ substitutes that comply with Standard No. 302. NHTSA believes it is the duty of the vehicle modifier to get information from its suppliers on the fire resistance of the materials it uses. Suppliers should be able to tell modifiers whether the material will meet Standard No. 302 requirements. The agency is not proposing a make inoperative exemption for Standard No. 302.

III. Explanation of Procedural Differences Between Proposed Exemption and Existing Exemption re Air Bag On-Off Switches

In developing the procedures for implementing the proposed exemption, the agency considered the detailed eligibility procedures it adopted as part of the make inoperative exemption that it issued in November 1997 to permit the retrofit installation of on-off switches for air bags. Generally, the agency tentatively concluded that the circumstances warranting the detailed procedures in that rulemaking are not present in this rulemaking.

The agency included detailed paperwork and agency authorization procedures for individual requests for on-off switches because information in the media and from the commenters indicated that many people misperceived the extent and source of the risk associated with air bags. The agency was concerned that many people who were not at risk for death or injury from an air bag would reduce their safety by unnecessarily installing and using switches. Therefore, NHTSA drafted the regulation granting the exemption to counteract that misperception and its potential consequences. The regulation requires vehicle owners to first read an information brochure explaining the actual risks associated with air bags and what most owners can do to virtually eliminate the risks to themselves and the users of their vehicle and to then submit a request for a switch to the agency. The vehicle owner may obtain a switch only after the agency sends the owner a letter authorizing a motor vehicle dealer or repair business to install it. The regulation also requires dealers or repair businesses to provide

the vehicle owner with information about the potential safety consequences of using the switch to turn off an air bag when they install a switch. In addition, dealers and repair businesses must notify the agency when they install a switch.

The agency has not proposed any of those procedural provisions as part of the exemption from the make inoperative prohibition for persons who modify vehicles to accommodate people with disabilities. More specifically, the agency has not proposed to require that vehicle owners or modifiers perform any of the tasks: fill out written requests, certify the need for modifications, certify having read the information concerning the safety consequences of modifications, or obtain prior agency approval of their requests. Similarly, the agency has not proposed to require that modifiers notify the agency of the modifications they make or provide vehicle owners with information concerning the safety consequences of the modifications.

The proposed exemption addresses the requests for modifications based on objective physical inability to use an unmodified vehicle, not any potentially overgeneralized or overstated fear of an item of vehicle equipment, as in the case of air bags. Thus, there is no gap between the actual need for modifications and the perceived need for them. Further, there is a limitation on the modifications that vehicle owners can obtain under the exemption. The modifications must be necessary to accommodate a particular disability. There is little likelihood that persons lacking disabilities will seek the types of modifications addressed by this proposed exemption. Most such modifications have appeal only to those with a need for them. In addition, most of these modifications are expensive. For example, a fairly extensive modification to allow a quadriplegic to drive costs anywhere from $27,000 to $80,000 (for the most advanced modifications). Even a relatively simple set of hand controls costs between $300 and $500. Further, the agency believes that most modifications, particularly the most extensive, are paid for in whole or in part by organizations that generally require individuals desiring vehicle modifications to be evaluated by an occupational therapist (OT), or other appropriate professional [41] before vehicles are modified. These organizations include the U.S. Department of Veterans Affairs (VA),[42] the states,[43] or third party payers, such as workman's compensation or disability insurers.[44] The OT assesses the severity of the person's disability and issues a prescription specifying the vehicle modifications that are needed to accommodate the person's disability.

A final factor that would tend to discourage persons without disabilities from attempting to obtain the modifications at issue in this proposed exemption is that those modifications take a considerable period of time. This is in part because modifiers must typically customize the vehicle to fit the person with a disability. For example, the modifications for a quadriplegic could take from several weeks to several months to complete. The modifier must take measurements and ensure that the location and alignment of all the controls and equipment are accessible to and operable by the person with a disability. In order to do this, a modifier must often schedule several ''fittings'' with the person for whom the vehicle is being modified.

Based on these considerations, the agency tentatively concluded that there is no need to propose special procedural provisions to limit the availability of modifications under the proposed exemption. There is little risk that people would seek to have their vehicles modified unless the modification was genuinely needed to accommodate a person's disability. The agency also believes there is little risk that modifiers would agree to modify vehicles for persons without disabilities. The exemption would not apply to any modifications performed for the convenience of an able-bodied person and modifiers would be subject to civil penalties for any such modifications. For the same reasons, the agency tentatively concludes also that there is no need for modifiers to inform the agency when it makes modifications under the exemption.

- NHTSA seeks comment on whether its tentative conclusions are correct. Is there a significant risk that individuals would seek modifications unrelated to the accommodation of persons with disabilities? Should the agency require any paperwork or record retention requirements to ensure either that the intended beneficiary is a person with disabilities or that the modifications are necessary to accommodate a specific disability or set of disabilities?

Finally, virtually all the businesses who perform vehicle modifications for individuals with disabilities are small businesses. The agency does not want to impose any unnecessary requirements on these businesses. The agency is concerned that requiring dealers and repair businesses to submit a complete copy of an authorization form to NHTSA would impose an unnecessary burden on these businesses. Under such a requirement, modifiers would incur the additional costs associated with preparing, printing, and maintaining such forms, and then mailing them after they have been filled in and signed.

- NHTSA requests comment on whether it should require dealers and repair businesses to submit such information to NHTSA and what the estimated burden for these businesses would be.

IV. Additional Issues and Considerations

NHTSA strongly encourages those who modify vehicles for disabled drivers and passengers to strive to ensure that disabled people receive a level of safety that is as close as possible to that provided able-bodied drivers and passengers. In order to operate, or ride in, motor vehicles, many disabled individuals have no choice but to accept a lower level of safety in their vehicle due to their disability and the technology that is currently available. For example, a disabled person with limited range of motion may have to sit extremely close to the steering wheel in order to drive. Sitting too close to the steering wheel places that person at increased risk of head, neck, and chest injuries in a crash.

NHTSA notes that in addition to the guidance that would be provided under this proposal, there is guidance available from the best available industry standards, such as the Society of Automotive Engineers (SAE) Recommended Practices, Test Procedures, and Information Reports. The agency urges modifiers to consult these materials. NHTSA encourages vehicle manufacturers to work closely with those who modify vehicles for persons with disabilities to develop vehicle designs which minimize the need for aftermarket modifications, and to develop appropriate mobility arrangements, adaptive devices, and other hardware that will work harmoniously with the requirements of all applicable standards.

[41] Medical doctors, rehabilitation specialists, and driver trainer/evaluators also evaluate persons with disabilities for vehicle modifications.

[42] Disabled veterans are eligible for financial assistance from the VA to help defray the cost of their vehicle modifications.

[43] Funding for vehicle modifications is available in most states through the Vocational Rehabilitation Departments to a person with a disability who needs a personal vehicle to travel to work or school.

[44] In addition, most major vehicle manufacturers offer rebates to people with disabilities who purchase their vehicles to help defray the cost of vehicle modifications and adaptive equipment.

The agency believes that the proposed exemption would meet the needs of most persons with disabilities seeking necessary vehicle modifications, but recognizes that there might be instances in which relief might be appropriate, but would not be available under the conditions of the exemption. For example, additional exemptions may be required due to advances in technology, amendments to the current standards, or to accommodate an extremely rare disability or condition. Consequently, to the extent consistent with this rulemaking, NHTSA would continue to review written requests for an exemption from the make inoperative prohibition for vehicle modifications not covered under this rulemaking.

V. Request for Comments

In addition to the questions raised above with respect to specific safety standards and the procedural differences between today's proposal and the existing exemption for air bag on-off switches, NHTSA requests comments about the appropriateness of the provisions of the proposed exemption. Among the specific issues are the following:

- NHTSA solicits comment on whether the standards proposed for inclusion under the exemption are appropriate. Are additional limitations needed with respect to these standards? The agency is particularly interested in the results of any tests that have been performed on modified vehicles and adaptive equipment. NHTSA seeks comment on whether there are modifications that would necessarily take a vehicle out of compliance with a standard but are not included in the proposed exemption. For the standard requirements that NHTSA is not proposing for inclusion in the exemption, the agency solicits comment on whether the agency's analysis is correct or whether any of those standards' requirements warrant inclusion in the exemption, and, if so, why?
- NHTSA seeks comment on the use of vehicle modification prescriptions in the vehicle modification industry. How often do vehicle owners provide modifiers with a prescription? Do modifiers generally follow the prescription's exact specifications or do they use the prescription as a general guide to how they should modify a vehicle? How often do vehicle owners provide modifiers with a license restriction identifying the needed accommodation? Should NHTSA expressly require motor vehicle dealers or repair businesses to obtain from vehicle owners either a prescription or a valid restricted driver's license? Would such a requirement improve safety? What effect would such a requirement have on individuals with disabilities? Would requiring individuals without a prescription or license restriction to submit a request to modify to NHTSA be unduly burdensome? Is such a requirement needed to ensure that modifications are performed only to accommodate a person's disability and not for the convenience of an able bodied individual?
- The agency is aware of one situation in which a person with a disability did not have a prescription because he did not seek medical treatment due to his personal religious beliefs. The agency solicits comment on whether people who do not consult medical professionals for religious reasons consult some other trained professional for advice on vehicle modifications. If they do consult another professional, what type of professional is it? The agency also requests comment on whether there are professionals other than doctors, occupational therapists, or driver specialists who evaluate persons with disabilities and recommend vehicle modifications.
- The agency seeks comment on the type of information that modifiers currently provide consumers concerning the specific vehicle modifications that they make to accommodate persons with disabilities and concerning the potential safety consequences of those modifications. Should NHTSA require the disclosure of such information by all modifiers? Should motor vehicle dealers and repair businesses be required to identify any steps they would take to minimize the vehicle's noncompliance with the particular standards?
- The agency seeks comment on whether it should require modifiers to disclose particular safety related information to the consumer. If so, what information should that be? Should NHTSA require the information to be presented in a particular way?
- The agency solicits comments on the appropriateness of requiring modifiers to obtain a written authorization from the vehicle owner before any modifications can be made. Do dealers and repair businesses already require such authorizations? The agency solicits comment from modifiers who currently obtain written authorization on how much time is involved in gathering and maintaining the forms.
- The agency seeks comment on whether it should require dealers or motor vehicle repair businesses to affix a permanent label to the vehicle to ensure that subsequent purchasers are aware that the vehicle has been modified and of the possible safety implications associated with such modifications. If the agency were to require a label, what should the format and the content of the label be? Where should it be placed? Do modifiers currently affix labels? If so, what does the label look like?
- The agency seeks comment on the cost of vehicle modifications made to accommodate people with disabilities.
- The agency requests comment on any state efforts to regulate the business of modifying vehicles to accommodate a person with a disability and the potential effect the proposed rule would have on those states' regulatory efforts.
- Finally, the agency has posted information on vehicle modifications and adaptive equipment at its Website (''www.nhtsa.dot.gov/cars/rules/adaptive''). The agency requests comment on whether this information is presented in a useful way. Is there information that is not available at the Website that modifiers and people with disabilities would like to have posted?

VI. Proposed Effective Date

Since this proposal would remove a restriction on the modification of vehicles for persons with disabilities, NHTSA anticipates making this amendment effective 30 days after publication of a final rule under the Administrative Procedures Act. 5 U.S.C. § 553(d). The agency requests comment as to the appropriateness of the effective date.

VII. Rulemaking Analyses and Notices

Executive Order 12866 and DOT Regulatory Policies and Procedures

NHTSA has considered the impact of this rulemaking action under E.O. 12866 and the Department of Transportation's regulatory policies and procedures. This rulemaking document was not reviewed under E.O. 12866, ''Regulatory Planning and Review.'' NHTSA has analyzed this proposal and determined that it is not ''significant'' within the meaning of the Department of Transportation's regulatory policies and procedures. NHTSA has, therefore, determined that a regulatory evaluation, designed to discuss the benefits/disbenefits and consumer costs/cost savings of a proposal, is not needed to support the subject rulemaking.

Clearly, modifying a vehicle in a way that degrades the performance of certain federal motor vehicle safety standards would produce some negative safety benefits for the occupants of the vehicle. However, the number of safety

standards affected would be very small and the number of vehicles potentially modified would be very few in number. Thus, the agency believes the disbenefits, if any exist, would be minimal. This is essentially the trade-off that NHTSA is faced with when increasing mobility for persons with disabilities—when necessary vehicle modifications are made, some safety may unavoidably be lost.

It is cost prohibitive to have every vehicle modification tested in advance for safety performance or safety compliance. The vehicle modifications being made today to accommodate disabled persons are based on engineering experience/judgment and have proven to be successful in the real-world. For this particular proposal, which is administrative in nature, no costs will be imposed by the agency's actions. The cost of doing business for the vehicle modification industry will not be changed by the subject proposal. If anything, there could be a cost savings due to eliminating the requirements that the modifier contact the agency about pending vehicle modifications.

Regulatory Flexibility Act

NHTSA has also considered the impacts of this notice under the Regulatory Flexibility Act. Most dealerships and repair businesses are considered small entities, and a substantial number of these businesses modify vehicles to accommodate individuals with disabilities. I hereby certify that this proposed rule would not have a significant economic impact on a substantial number of small entities. As explained above, this action would create a formal procedure to replace the current requirement that dealers or repair businesses write to NHTSA and request permission each time they need to modify a vehicle in a way that compromises a vehicle's compliance with any standard to accommodate an individual with a disability. While most dealers and repair businesses would be considered small entities, the proposed requirements would not impose any mandatory significant economic impact on them considering that: (1) for the vast majority of cases, the agency believes the rule codifies standard industry practices and procedures used to make vehicle modifications, (2) the proposed rule would assist dealers and repair businesses in making appropriate design choices, and (3) the proposed rule would eliminate the costs associated with submitting a written request to NHTSA to modify each vehicle as well as the costs associated with waiting for the agency's response. Therefore, a Preliminary Regulatory Flexibility Analysis is not required as the subject rule does not impose any significant costs on small business entities.

Paperwork Reduction Act

NHTSA has analyzed this proposed rule under the Paperwork Reduction Act of 1995 (P.L. 104–13) and determined that it would not impose any information collection requirements as that term is defined by the Office of Management and Budget (OMB) in 5 CFR part 1320.

The National Environmental Policy Act

NHTSA has also analyzed this proposed rule under the National Environmental Policy Act and determined that it would have no significant impact on the human environment.

The Unfunded Mandates Reform Act

The Unfunded Mandates Reform Act of 1995 (Public Law 104–4) requires agencies to prepare a written assessment of the costs, benefits and other effects of proposed or final rules that include a Federal mandate likely to result in the expenditure by State, local or tribal governments, in the aggregate, or by the private sector, of more than $100 million annually. This proposed rule does not meet the definition of a Federal mandate, because it is completely permissive. In addition, annual expenditures will not exceed the $100 million threshold.

Executive Order 12612 (Federalism)

The agency has analyzed this proposed rule in accordance with the principles and criteria set forth in Executive Order 12612. NHTSA has determined that this proposed rule would not have sufficient federalism implications to warrant the preparation of a Federalism Assessment.

Civil Justice Reform

This proposed rule has no retroactive effect. NHTSA is not aware of any state law that would be preempted by this proposed rule. This proposed rule would not repeal any existing Federal law or regulation. It would modify existing law only to the extent that it replaces an agency procedure under which dealers and repair businesses had to obtain the agency's permission to modify a vehicle to accommodate a person with a disability in a way that compromised the vehicle's compliance with the Standard. This proposed rule would not require submission of a petition for reconsideration or the initiation of other administrative proceedings before a party may file suit in court.

VIII. Comments

NHTSA is providing a 90 day comment period. Interested persons are invited to submit comments on this proposal. It is requested but not required that 2 copies be submitted.

All comments should not exceed 15 pages in length (49 CFR 553.21). Necessary attachments may be appended to these submissions without regard to the 15 page limit. The limitation is intended to encourage commenters to detail their primary arguments in a concise fashion.

If a commenter wishes to submit certain information under a claim of confidentiality, three copies of the complete submission, including the purportedly confidential business information, should be submitted to the Chief Counsel, NHTSA, 400 7th Street, SW, Room 5219, Washington, DC 20590, and two copies from which the purportedly confidential information has been deleted should be submitted to the NHTSA Docket Section. A request for confidentiality should be accompanied by a cover letter setting forth the information specified in the agency's confidential business information regulation. 49 CFR Part 512.

All comments received by NHTSA before the close of business on the comment closing date indicated above for the proposal will be considered, and will be available for examination in the docket at the above address both before and after that date. To the extent possible, comments filed after the closing date will also be considered. Comments received too late for consideration in regard to the final rule will be considered as suggestions for further rulemaking action. Comments on the proposal will be available for inspection in the docket. The NHTSA will continue to file relevant information as it becomes available in the docket after the closing date, and recommends that interested persons continue to examine the docket for new material.

Those persons desiring to be notified upon receipt of their comments in the rulemaking docket should enclose a self-addressed, stamped postcard in the envelope with their comments. Upon receiving the comments, the docket supervisor will return the postcard by mail.

List of Subjects in 49 CFR Part 595

Imports, Motor vehicle safety, Motor vehicles, Disability.

For the reasons set forth in the preamble, NHTSA proposes to amend Part 595 of Title 49 of the Code of Federal Regulations as follows:

PART 595—EXEMPTIONS FROM THE MAKE INOPERATIVE PROHIBITION

1. The authority citation for part 595 would continue to read as follows:

Authority: 49 U.S.C. 322, 30111, 30115, 30117, 30122, and 30166; delegation of authority at 49 CFR 1.50.

2. The heading of part 595 would be revised to read as set forth above.

3. Sections 595.1, 595.2, 595.3, and 595.4 would be designated as ''Subpart A—General''.

4. Section 595.1 would be revised to read as follows:

§ 595.1 Scope.

This part establishes conditions under which the compliance of motor vehicles and motor vehicle equipment with the Federal motor vehicle safety standards is to be made inoperative.

5. Section 595.2 would be revised to read as follows:

§ 595.2 Purpose.

The purpose of this part is to provide an exemption from the ''make inoperative'' provision of 49 U.S.C. 30122 that permits motor vehicle dealers and motor vehicle repair businesses to install retrofit on-off switches for air bags and to otherwise modify motor vehicles to enable people with disabilities to operate or ride as a passenger in a motor vehicle.

6. Section 595.5 is designated as ''Subpart B—Retrofit On-off Switches for Air Bags''.

7. The heading of Section 595.5 would be revised to read as follows: ''Requirements for Retrofit Air Bag On-off Switches.''

8. Subpart C would be added to read as follows:

Subpart C—Vehicle Modifications To Accommodate People With Disabilities

§ 595.6 Requirements for Vehicle Modifications To Accommodate People With Disabilities.

(a) Any dealer or motor vehicle repair business that modifies a motor vehicle to enable a person with a disability to operate or ride as a passenger in the motor vehicle is exempted from the ''make inoperative'' prohibition of 49 U.S.C. 30122 to the extent that those modifications affect the motor vehicle's compliance with the Federal motor vehicle safety standards or portions thereof specified in paragraph (b) of this section. No other Federal motor vehicle safety standards, or portions thereof, are included.

(b)(1) 49 CFR 571.101, except for S5.1 (a), S5.3.1, S5.3.2, and S5.3.5 of that section.

(2) Paragraph S5.1.1.5 of 49 CFR 571.108, in the case of a motor vehicle that is modified to be driven without a steering wheel or for which it is not feasible to retain the turn signal lever installed by the vehicle manufacturer.

(3) Paragraph S4(a) of 49 CFR 571.118, in cases in which the medical condition of the person for whom the vehicle is modified necessitates a remote ignition switch to start the vehicle.

(4) Paragraph S5.3.1 of 49 CFR 571.135, in cases in which the modification requires removal of the original equipment manufacturer foot pedal.

(5) 49 CFR 571.202, in any case in which:

(i) a motor vehicle is modified to be operated by a driver seated in a wheelchair and no other seat is supplied with the vehicle for the driver;

(ii) a motor vehicle is modified to transport a right front passenger seated in a wheelchair and no other right front passenger seat is supplied with the vehicle; or

(iii) the driver's head restraint must be modified to accommodate a driver with a disability.

(6) Paragraph S5.1 of 49 CFR 571.203, in cases in which the modification requires a structural change to, or removal of, the original equipment manufacturer steering shaft.

(7) 49 CFR 571.204, in cases in which the modification requires a structural change to, or removal of, the original equipment manufacturer steering shaft.

(8) 49 CFR 571.207, in cases in which a vehicle is modified to be driven by a person seated in a wheelchair and no other driver's seat is supplied with the vehicle, provided that a wheelchair securement device is installed at the driver's position.

(9) 49 CFR 571.208, provided Type 2 or 2A seat belts meeting the requirements of 571.209 and 571.210 of this chapter are installed.

(10) Paragraph S5 of 49 CFR 571.214, in cases in which the restraint system and/or seat must be changed to accommodate a person with a disability.

Issued on September 22, 1998.

L. Robert Shelton,

Associate Administrator for Safety Performance Standards.

[FR Doc. 98–25761 Filed 9–23–98; 1:40 pm]

BILLING CODE 4910–59–P

Notices

Federal Register
Vol. 63, No. 187
Monday, September 28, 1998

This section of the FEDERAL REGISTER contains documents other than rules or proposed rules that are applicable to the public. Notices of hearings and investigations, committee meetings, agency decisions and rulings, delegations of authority, filing of petitions and applications and agency statements of organization and functions are examples of documents appearing in this section.

DEPARTMENT OF COMMERCE

International Trade Administration

[A–122–601]

Brass Sheet and Strip From Canada, Antidumping Duty Administrative Review; Extension of Time Limit for Preliminary Results of Antidumping Duty Administrative Review

AGENCY: Import Administration, International Trade Administration, Department of Commerce.

ACTION: Notice of extension of time limit for preliminary results.

SUMMARY: The Department of Commerce (the Department) is extending the time limit for the preliminary results of the antidumping duty administrative review of Brass Sheet and Strip from Canada. The review covers one manufacturer/exporter of the subject merchandise to the United States and the period January 1, 1997 to December 31, 1997.

EFFECTIVE DATE: September 28, 1998.

FOR FURTHER INFORMATION CONTACT: Paul M. Stolz or Tom Futtner, Program Manager, Office of Antidumping/Countervailing Duty Enforcement, Office 4, Import Administration, International Trade Administration, U.S. Department of Commerce, 14th Street and Constitution Avenue, NW., Washington, DC 20230, telephone: (202) 482–4474 or (202) 482–3814 respectively.

Applicable Statute

Unless otherwise indicated, all citations to the Tariff Act of 1930 (''the Act'') are references to the provisions effective January 1, 1995, the effective date of the amendments made to the Act by the Uruguay Rounds Agreements Act.

Extension of Preliminary Results

The Department initiated this administrative review on February 27, 1998 (63 FR 10002). Under Section 751(a)(3)(A) of the Act, the Department may extend the deadline for completion of an administrative review if it determines that it is not practicable to complete this review within the statutory time limit of 365 days. The Department has determined that it is not practicable to issue its preliminary results within the original time limit. (See Decision Memorandum from Holly A. Kuga, Acting Deputy Assistant Secretary, AD/CVD Enforcement, Group II to Robert LaRussa, Assistant Secretary for Import Administration. September 21, 1998.) Therefore, the Department is extending the time limit for completion of the preliminary results until January 31, 1999.

The deadline for the final results of this review will continue to be 120 days after publication of the preliminary results.

This extension is in accordance with section 751(a)(3)(A) of the Tariff Act of 1930, as amended (19 U.S.C. 1675(a)(3)(A)).

Dated: September 22, 1998.

Holly A. Kuga,

Acting Deputy Assistant Secretary for Import Administration.

[FR Doc. 98–25867 Filed 9–25–98; 8:45 am]

BILLING CODE 3510–DS–M

DEPARTMENT OF COMMERCE

International Trade Administration

[A–570–803]

Heavy Forged Hand Tools, Finished or Unfinished, With or Without Handles, From the People's Republic of China; Extension of Time Limit for Preliminary Results of Antidumping Duty Administrative Reviews

AGENCY: Import Administration, International Trade Administration, Department of Commerce.

ACTION: Notice of extension of time limit for the preliminary results of antidumping duty administrative reviews.

SUMMARY: The Department of Commerce (''the Department'') is extending the time limit for the preliminary results of the sixth antidumping duty administrative review of the antidumping orders on heavy forged hand tools, finished or unfinished, with or without handles (''HFHTs''), from the People's Republic of China (''PRC''). This review covers five producers/exporters of four classes or kinds of HFHTs from the PRC. The period of review is February 1, 1997 through January 31, 1998.

EFFECTIVE DATE: September 28, 1998.

FOR FURTHER INFORMATION CONTACT: Matthew Blaskovich or Alexander Amdur, AD/CVD Enforcement, Group II, Office IV, Import Administration, International Trade Administration, U.S. Department of Commerce, 14th Street and Constitution Avenue, NW, Washington, DC 20230; telephone: (202) 482–4697 or (202) 482–5346, respectively.

SUPPLEMENTARY INFORMATION:

Applicable Statute and Regulations

Unless otherwise indicated, all citations to the Tariff Act of 1930 (''the Act'') are references to the provisions effective January 1, 1995, the effective date of the amendments made to the Act by the Uruguay Round Agreements Act (''URAA''). In addition, unless otherwise indicated, all citations to the Department's regulations are references to the provisions codified at 19 CFR 351 (1998).

Extension of Preliminary Results

The Department initiated this administrative review on March 23, 1998 (63 FR 13837). Under section 751(a)(3)(A) of the Act, the Department may extend the deadline for completion of an administrative review if it determines that it is not practicable to complete the review within the statutory time limit of 365 days. The Department finds that it is not practicable to complete this review within the statutory time limit of 365 days. The Department, therefore, is extending the time limit for the preliminary results of the aforementioned review by 90 days to January 29, 1999. *See* memorandum from Holly A. Kuga to Robert S. LaRussa, September 21, 1998, on file in Room B–099. The deadline for the final results of these reviews will continue to be 120 days after publication of the preliminary results.

This extension of time limit is in accordance with section 751(a)(3)(A) of the Act and section 351.213(h)(2) of the Department's regulations.

Dated: September 22, 1998.

Holly A. Kuga,

Acting Deputy Assistant Secretary, Import Administration.

[FR Doc. 98–25868 Filed 9–25–98; 8:45 am]

BILLING CODE 3510–DS–P

DEPARTMENT OF COMMERCE

Minority Business Development Agency

[Docket No. 980901228–8228–01]

RIN 0640–ZA04

Solicitation of Applications for the Minority Business Opportunity Committee (MBOC) Program

AGENCY: Miniority Business Development Agency, Commerce.

ACTION: Notice; extension of closing date.

SUMMARY: The Minority Business Development Agency is extending the closing date for responses to its announcement to solicit competitive applications under its Minority Business Opportunity Committee program which was announced in the **Federal Register** on September 8, 1998. All other information in the prior notice remains the same.

DATES: Complete applications for the MBOC program must be mailed (USPS postmark) or received by MBDA at the address below no later than 5 p.m. Eastern Daylight Time on October 16, 1998.

ADDRESSES: Applicants must submit one signed original plus two copies of the application, including all information required by the Competitive Application Package. Complete application packages must be submitted to: Minority Business Opportunity Committee Program Manager, Office of Executive Secretariat, HCHB, Room 5073, Minority Business Development Agency, U.S. Department of Commerce, 1401 Constitution Avenue, NW, Washington, DC 20230.

If the application is hand-delivered by the applicant or its representative, it must be delivered to Room 1874, which is located at Entrance #10, 15th Street NW, between Pennsylvania and Constitution Avenues. Unsigned applications will be considered non-responsive and will be returned to the applicant. Failure to submit other required information may result in points being deducted from an applicant's score.

FOR FURTHER INFORMATION CONTACT: For further information and a Competitive Application Package contact Stephen Boykin, the MBOC Program Manager, at (202) 482–1712.

SUPPLEMENTARY INFORMATION: On September 8, 1998, (63 FR 47480) the Minority Business Development Agency (MBDA) published a notice soliciting competitive applications from organizations seeking to operate Minority Business Opportunity Committees (MBOCs). All information required to submit a cooperative agreement application by eligible applicants is contained in that announcement and in the Competitive Application Package. By this notice, the MBDA is extending the date to receive applications from October 8, 1998, to October 16, 1998.

Authority: Executive Order 11625 and 15 U.S.C. 1512.

Dated: September 22, 1998.

Juanita E. Berry,

Federal Register Liaison Officer.

[FR Doc. 98–25814 Filed 9–25–98; 8:45 am]

BILLING CODE 3510–21–M

COMMITTEE FOR THE IMPLEMENTATION OF TEXTILE AGREEMENTS

Denial of Participation in the Special Access Program

September 21, 1998.

AGENCY: Committee for the Implementation of Textile Agreements (CITA).

ACTION: Issuing a directive to the Commissioner of Customs suspending participation in the Special Access Program.

EFFECTIVE DATE: September 15, 1998.

FOR FURTHER INFORMATION CONTACT: Lori E. Mennitt, International Trade Specialist, Office of Textiles and Apparel, U.S. Department of Commerce, (202) 482–3400.

SUPPLEMENTARY INFORMATION:

Authority: Section 204 of the Agricultural Act of 1956, as amended (7 U.S.C. 1854); Executive Order 11651 of March 3, 1972, as amended.

The Committee for the Implementation of Textile Agreements (CITA) has determined that H.F. Manufacturing has violated the requirements for participation in the Special Access Program, and has suspended H.F. Manufacturing from participation in the Program for the period September 15, 1998 through September 14, 2001.

Through the letter to the Commissioner of Customs published below, CITA directs the Commissioner to prohibit entry of products under the Special Access Program by or on behalf of H.F. Manufacturing during the period September 15, 1998 through September 14, 2001, and to prohibit entry by or on behalf of H.F. Manufacturing under the Program of products manufactured from fabric exported from the United States during that period.

Requirements for participation in the Special Access Program are available in **Federal Register** notice 63 FR 16474, published on April 3, 1998.

Troy H. Cribb,

Chairman, Committee for the Implementation of Textile Agreements.

Committee for the Implementation of Textile Agreements

September 21, 1998.

Commissioner of Customs,

Department of the Treasury, Washington, DC 20229.

Dear Commissioner: The purpose of this directive is to notify you that the Committee for the Implementation of Textile Agreements has suspended H.F. Manufacturing from participation in the Special Access Program for the period September 15, 1998 through September 14, 2001. You are therefore directed to prohibit entry of products under the Special Access Program by or on behalf of H.F. Manufacturing during the period September 15, 1998 through September 14, 2001. You are further directed to prohibit entry of products under the Special Access Program by or on behalf of H.F. Manufacturing manufactured from fabric exported from the United States during the period September 15, 1998 through September 14, 2001.

Sincerely,

Troy H. Cribb,

Chairman, Committee for the Implementation of Textile Agreements.

[FR Doc.98–25803 Filed 9–25–98; 8:45 am]

BILLING CODE 3510–DR–F

DEPARTMENT OF DEFENSE

Office of the Secretary

TRICARE Formerly Known as the Civilian Health and Medical Program of the Uniformed Services (CHAMPUS); Fiscal Year 1999 Mental Health Rate Updates

AGENCY: Office of the Secretary, DoD.

ACTION: Notice of updated mental health per diem rates.

SUMMARY: This notice provides for the updating of hospital-specific per diem rates for high volume providers and regional per diem rates for low volume providers; the updated cap per diem for high volume providers; the beneficiary per diem cost-share amount for low volume providers for FY 1999 under the

TRICARE Mental Health Per Diem Payment System; and the updated per diem rates for both full-day and half-day TRICARE Partial Hospitalization Programs for fiscal year 1999.

EFFECTIVE DATE: The rates contained in this notice are effective for services occurring on or after October 1, 1998.

FOR FURTHER INFORMATION CONTACT: Stan Regensberg, Office of Medical Benefits and Reimbursement Systems, TRICARE Management Activity, telephone (303) 676–3742.

SUPPLEMENTARY INFORMATION: The final rule published in the **Federal Register** on September 6, 1988, (53 FR 34285) set forth reimbursement changes that were effective for all inpatient hospital admissions in psychiatric hospitals and exempt psychiatric units occurring on or after January 1, 1989. The final rule published in the **Federal Register** on July 1, 1993, (58 FR 35–400) set forth maximum per diem rates for all partial hospitalization admissions on or after September 29, 1993. Included in these final rules were provisions for updating reimbursement rates for each federal fiscal year.

As stated in the final rules, each per diem shall be updated by the Medicare update factor for hospitals and units exempt from the Medicare Prospective Payment System. The final rule published in the **Federal Register** March 7, 1995, (60 FR 12419) set forth retaining all per diems in effect at the end of fiscal year 1995 with no additional updates for fiscal years 1996 and 1997. Medicare recommended a rate of increase of 0 percent for federal fiscal year 1998 for hospitals and units excluded from the prospective payment system. For fiscal year 1999, Medicare has recommended a rate of increase of 2.4 percent for hospitals and units excluded from the prospective payment system. TRICARE will adopt this update factor for FY 1999 as the final update factor. Hospitals and units with hospital-specific rates (hospitals and units with high TRICARE volume) and regional specific rates for psychiatric hospitals and units with low TRICARE volume will have their TRICARE rates for FY 1998 updated by 2.4 percent for FY 1999. Partial hospitalization rates for full day and half day programs will also be 2 updated by 2.4 percent for FY 1999. The cap amount for high volume hospitals and units will also be updated by the 2.4 percent for FY 1999. The beneficiary cost-share of low volume hospitals and units will also be updated by the 2.4 percent for FY 1999. Consistent with Medicare, the wage portion of the regional rate subject to the area wage adjustment will remain at 71.1 percent for FY 1999.

The following reflect an update of 2.4 percent.

REGIONAL SPECIFIC RATES FOR PSYCHIATRIC HOSPITALS AND UNITS WITH LOW CHAMPUS VOLUME

United States census region	Rate [1]
Northeast:	
New England	$527
Mid-Atlantic	504
Midwest:	
East North Central	436
West North Central	412
South:	
South Atlantic	521
East South Central	563
West South Central	474
West:	
Mountain	473
Pacific	558

[1] Wage portion of the rate, subject to the area wage adjustment—71.1 percent.

Beneficiary Cost-Share: Beneficiary cost-share (other than dependents of active duty members) for care paid on the basis of a regional per diem rate is the lower of $140 per day or 25 percent of the hospital billed charges effective for services rendered on or after October 1, 1998.

Cap Amount: Updated cap amount for hospitals and units with high CHAMPUS volume is $660 per day for FY 1999.

The following reflect an update of 2.4 percent.

PARTIAL HOSPITALIZATION RATES FOR FULL-DAY AND HALF-DAY PROGRAMS

United States census region	Full-day rate (6 hours or more)	Half-day rate (3–5 hours)
Northeast:		
New England (ME, NH, VT, MA, RI, CT)	$216	$163
Mid-Atlantic (NY, NJ, PA)	236	177
Midwest:		
East North Central (OH, IN, IL, MI, WI)	210	158
West North Central (MN, IA, MO, ND, SD, NE, KS)	207	156
South:		
South Atlantic (DE, MD, DC, VA, WV, NC, SC, GA, FL)	223	168
East South Central (KY, TN, AL, MS)	243	182
West South Central (AR, LA, TX, OK)	240	180
West:		
Mountain (MT, ID, WY, CO, NM, AZ, UT, NV)	249	187
Pacific (WA, OR, CA, AK, HI)	245	184

Dated: September 21, 1998.

L.M. Bynum,

Alternate OSD Federal Register Liaison Officer, Department of Defense.

[FR Doc. 98–25780 Filed 9–25–98; 8:45 am]

BILLING CODE 5000–04–p

DEPARTMENT OF DEFENSE

Office of the Secretary

Meeting of the Defense Policy Board Advisory Committee

AGENCY: Department of Defense, Defense Policy Board Advisory Committee.

ACTION: Notice.

SUMMARY: The Defense Policy Board Advisory Committee will meet in closed session at the Pentagon on October 6, 1998.

The purpose of the meeting is to provide the Secretary of Defense, Deputy Secretary of Defense and Under Secretary of Defense for Policy with independent, informed advice on major matters of defense policy. The Board will hold classified discussions on national security matters.

In accordance with Section 10(d) of the Federal Advisory Committee Act, Public Law No. 92–463, as amended [5 U.S.C. App II (1982)], it has been determined that this meeting concerns matters listed in 5 U.S.C. 552B(c)(1)(1982), and that accordingly this meeting will be closed to the public.

DATES: Tuesday, October 6, 1998 (9:30 a.m. to 5:00 p.m.).

EFFECTIVE DATE: 3E869, the Pentagon, Washington, D.C. 20301.

FOR FURTHER INFORMATION CONTACT: CDR Randall Lovdahl, USN, 703–697–4557.

Dated: September 21, 1998.

L.M. Bynum,

Alternate Federal Register Liaison Officer, Department of Defense.

[FR Doc. 98–25778 Filed 9–25–98; 8:45 am]

BILLING CODE 5000–04–M

DEPARTMENT OF DEFENSE

Office of the Secretary

Meeting of the Senior Advisory Board on National Security

AGENCY: Department of Defense, Office of the Undersecretary of Defense (Policy).

ACTION: Notice of closed meeting.

SUMMARY: The Senior Advisory Board on National Security will meet in closed session on October 6, 1998. The Board was recently established to conduct a comprehensive review of the early twenty-first century global security environment; develop appropriate national security objectives and a strategy to attain these objectives; and recommend concomitant changes to the national security apparatus as necessary.

In accordance with Section 10(d) of the Federal Advisory Committee Act, Public Law 92–463, as amended by 5 U.S.C., Appendix II, it has been determined that matters affecting national security, as covered by 5 U.S.C. 552(b)(1) (1988), will be presented throughout the meeting, and that, accordingly, the meeting will be closed to the public.

DATES: Tuesday, October 6, 1998 (10:45 a.m. to 4:00 p.m.).

ADDRESSES: 3E928, the Pentagon, Washington, D.C. 20301.

FOR FURTHER INFORMATION CONTACT: Contact Dr. Keith A. Dunn, National Security Study Group, Suite 532, Crystal Mall 3, 1931 Jefferson Davis Highway, Arlington, VA 22203–3805. Telephone 703–602–4175.

Dated: September 21, 1998.

L.M. Bynum,

Alternate OSD Federal Register Liaison Officer, Department of Defense.

[FR Doc. 98–25781 Filed 9–25–98; 8:45 am]

BILLING CODE 5000–04–M

DEPARTMENT OF DEFENSE

Office of the Secretary

Defense Science Board Task Force on Coalition Warfare; Notice of Advisory Committee Meetings

SUMMARY: The Defense Science Board Task Force on Coalition Warfare will meet in closed session on September 22 and 28, 1998 at Strategic Analysis, Inc., 4001 N. Fairfax Drive, Arlington, Virginia. In order for the Task Force to obtain time sensitive classified briefings, critical to the understanding of the issues, these meetings are scheduled on short notice.

The mission of the Defense Science Board is to advise the Secretary of Defense through the Under Secretary of Defense for Acquisition and Technology on Scientific and technical matters as they affect the perceived needs of the Department of Defense. At these meetings the Task Force will address how best to make future U.S. military capabilities, embodied by JV2010, coalition compatible.

In accordance with Section 10(d) of the Federal Advisory Committee Act, Pub. L. No. 92–463, as amended (5 U.S.C. App. II, (1994)), it has been determined that these DSB Task Force meetings concern matters listed in 5 U.S.C. 552b(c)(1) (1994), and that accordingly these meetings will be closed to the public.

Dated: September 21, 1998.

L.M. Bynum,

Alternate OSD Federal Register Liaison Officer, Department of Defense.

[FR Doc. 98–25779 Filed 9–25–98; 8:45 am]

BILLING CODE 5000–04–M

DEPARTMENT OF DEFENSE

Department of the Army

Availability of U.S. Patents for Non-Exculsive, Exclusive, or Partially-Exclusive Licensing

AGENCY: U.S. Army Research Laboratory, DOD.

ACTION: Notice.

SUMMARY: In accordance with 37 CFR 404.6, announcement is made of the availability of the following U.S. patents for non-exclusive, partially exclusive or exclusive licensing. All of the listed patents have been assigned to the United States of America as represented by the Secretary of the Army, Washington, DC.

These patents covering a wide variety of technical arts including: A device to enhance the signature of a target and a method for multisensor multitarget tracking.

Under the authority of Section 11(a)(2) of the Federal Technology Transfer Act of 1986 (Pub. L. 99–502) and section 207 of Title 35, United States Code, the Department of the Army as represented by the U.S. Army Research Laboratory wish to license the U.S. patents listed below in a non-exclusive, exclusive, or partially exclusive manner to any party interested in manufacturing, using, and/or selling devices or processes covered by these patents.

Title: Active/Passive Signature Enhancer (APSE).

Inventors: Marcos C. Sola.

Patent Number: 5,784,196.

Issued Date: July 21, 1998.

Title: Method and Apparatus for Multi-Sensor Multi-Target Tracking Using Intelligent Search Techniques.

Inventors: David Hillis.

Patent Number: 5,793,931.

Issued Date: Aug. 11, 1998.

FOR FURTHER INFORMATION CONTACT.: Ms. Norma Cammarata, Technology Transfer Office, AMSRL–CS–TT, U.S. Army Research Laboratory, 2800 Powder Mill

Road, Adelphi, Maryland 20783–1197, tel: (301) 394–2952; fax: (301) 394–5818.

SUPPLEMENTARY INFORMATION: None.

Mary V. Yonts,

Alternate Army Federal Register Liaison Officer.

[FR Doc. 98–25861 Filed 9–25–98; 8:45 am]

BILLING CODE 3710–08–M

DEPARTMENT OF DEFENSE

Department of the Army

Availability of U.S. Patents for Non-Exclusive, Exclusive, or Partially-Exclusive Licensing

AGENCY: Army Research Laboratory, DOD.

ACTION: Notice.

SUMMARY: In accordance with 37 CFR 404.6, announcement is made of the availability of the following U.S. patents for non-exclusive, partially exclusive or exclusive licensing. All of the listed patents have been assigned to the United States of America as represented by the Secretary of the Army, Washington, DC.

These patents cover a wide variety of technical arts including: A method for generating simulated terrain surfaces, a method for approximating the dynamic effects of atmospheric turbulence on infrared digital imagery, a method for depositing thin films on solid objects and a method of making ferrolectric thin film composites.

Under the authority of section 11(a)(2) of the Federal Technology Transfer Act of 1986 (Pub. L. 99–502) and section 207 of Title 35, United States Code, the Department of the Army as represented by the U.S. Army Research Laboratory wish to license the U.S. patents listed below in a non-exclusive, exclusive or partially exclusive manner to any party interested in manufacturing, using, and/or selling devices or processes covered by these patents.

Title: Method for Generating and Modifying Simulated Terrain Surfaces and Representing Terrain Related Processes.

Inventors: Joseph K. Wald, Carolyn J. Patterson and MaryAnne Fields.

Patent Number: 5,790,123.

Issued Date: Aug. 4, 1998.

Title: Method for Producing Films of Uniform Thickness by Ion-Assisted Deposition.

Inventor: Wolfgang Franzen.

Patent Number: 5,789,041.

Issued Date: Aug. 4, 1998.

Title: Method of Making Ferrolectric Thin Film Composites.

Inventors: Somnath Sengupta and Louise Sengupta.

Patent Number: 5,766,697.

Issued Date: Jun. 16, 1998.

Title: Simplified Simulation of Effects of Turbulence on Digital Imagery.

Inventors: Wendell R. Watkins, Fernando R. Palacios, Daniel Billingsley and Jay B. Jordan.

Patent Number: 5,756,990.

Issued Date: May 26, 1998.

FOR FURTHER INFORMATION CONTACT: Mr. Michael Rausa, Technology Transfer Office, AMSRL–CS–TT, U.S. Army Research Laboratory, Aberdeen Proving Ground, Maryland 21005–5055, tel: (410) 278–5028; fax: (410) 278–5820.

SUPPLEMENTARY INFORMATION: None.

Mary V. Yonts,

Alternate Army Federal Register Liaison Officer.

[FR Doc. 98–25862 Filed 9–25–98; 8:45 am]

BILLING CODE 3710–08–M

DEPARTMENT OF DEFENSE

Department of the Army

Intent To Grant Exclusive Patent License; Northrop Grumman

AGENCY: U.S. Army Medical Research and Materiel Command, DoD.

ACTION: Notice.

SUMMARY: The Department of the Army hereby gives notice of its intent to grant to Northrop Grumman a revocable, nonassignable, exclusive license in the United States to practice the Government owned invention described in U.S. Patent No. 5,626,151, entitled ''Transportation Life Support System,'' issued May 6, 1997. Anyone wishing to object to the grant of this license has 60 days from the date of this notice to file written objections along with supporting evidence, if any. Written objections may be filed with the Office of the Command Judge Advocate, U.S. Army Medical Research and Materiel Command, 504 Scott Street, Fort Detrick, Maryland 21702–5012, ATTN: MCMR–JA.

FOR FURTHER INFORMATION CONTACT: Mr. Jay Winchester, Attorney Advisor, 301–619–2065 or fax 301–619–5034.

SUPPLEMENTARY INFORMATION: None.

Mary V. Yonts,

Alternate Army Federal Register Liaison Officer.

[FR Doc. 98–25859 Filed 9–25–98; 8:45 am]

BILLING CODE 3710–08–M

DEPARTMENT OF DEFENSE

Department of the Army

Notice of Availability and Intent To Grant Exclusive Patent License

AGENCY: U.S. Army Medical Research and Materiel Command, DoD.

ACTION: Notice.

SUMMARY: In accordance with 37 CFR 404.6, announcement is made of the availability of U.S. Patent Application Serial Number 09/045,815 filed March 23, 1998. This invention has been assigned to the United States Government as represented by the Secretary of the Army. The Department of the Army hereby gives notice of its intent to grant to Tactical Medical Solutions, LLC, a revocable, nonassignable, exclusive license in the United States to practice the Government owned invention described in U.S. Patent Application Serial No. 09/045,815, entitled ''Advanced Surgical Suite for Trauma Casualties,'' filed March 23, 1998. Anyone wishing to object to the grant of this license has 90 days from the date of this notice to file written objections along with supporting evidence, if any. Written objections may be filed with the Office of the Command Judge Advocate, U.S. Army Medical Research and Materiel Command, 504 Scott Street, Fort Detrick, Maryland 21702–5012, Attn: MCMRA–JA.

FOR FURTHER INFORMATION CONTACT: Mr. Jay Winchester, Attorney Advisor, 301–619–2065 or fax 301–619–5034.

SUPPLEMENTARY INFORMATION: The invention is a self-contained, rapidly deployable, small footprint facility capable of providing trauma management, resuscitation surgery, ancillary services, or temporary patient holding.

Mary V. Yonts,

Alternate Army Federal Register Liaison Officer.

[FR Doc. 98–25858 Filed 9–25–98; 8:45 am]

BILLING CODE 3710–08–M

DEPARTMENT OF DEFENSE

Department of the Army, Corps of Engineers

Intent To Prepare a Draft Environmental Impact Statement (DEIS) for a Proposed Small Boat Harbor at Tatitlek, Alaska

AGENCY: Army Corps of Engineers, DoD.

ACTION: Notice of intent.

SUMMARY: The U.S. Army Engineer District, Alaska intends to prepare a DEIS for a small boat harbor at Tatitlek, Alaska. The harbor would serve local commercial and subsistence fishing vessels, moor commercial and recreational transient vessels, and support oil spill response vessels.

FOR FURTHER INFORMATION CONTACT: Lizette Boyer (907) 753–2637, Alaska District, Corps of Engineers, Environmental Resources Section (CEPOA–EN–CW–ER), PO Box 898, Anchorage, Alaska 99506–0898.

SUPPLEMENTARY INFORMATION: The project is being studied under the Continuing Authority Program. The structural alternatives include construction of a rubblemound breakwater, a dredged basin, and harbor related infrastructure on tidelands or wetlands. Initial evaluation identified two harbor locations and four harbor plan alternatives: Three designs for the Village Cove site, and one design for the Southpoint site. Other harbor locations and non-structural alternatives identified during scoping will be studied. Design alternatives would require blasting rock and dredging sediments to create the basin and entrance channel. The Southpoint site design alternative would not require dredging.

Issues: The DEIS will consider impacts to eelgrass beds, marine intertidal and subtidal communities, fish and wildlife, wetlands, threatened and endangered species, water quality, cultural resources, socio-economic resources, and other resources and concerns identified through scoping, public involvement, and interagency coordination.

Scoping: A copy of this notice and additional public information will be sent to interested parties to initiate scoping. All parties are invited to participate in the scoping process by identifying any additional concerns, issues, studies needed, and alternatives. A scoping meeting is not planned at this time. The effects to eelgrass beds and their importance to the ecology of the area have been identified as a significant issue. The estimated date for a DEIS is February 15, 1999.

Gregory D. Showalter,

Army Federal Register Liaison Officer.

[FR Doc. 98–25860 Filed 9–25–98; 8:45 am]

BILLING CODE 3710–NL–M

DEPARTMENT OF EDUCATION

Submission for OMB Review; Comment Request

AGENCY: Department of Education.

ACTION: Submission for OMB review; comment request.

SUMMARY: The Chief Financial and Chief Information Officer, Office of the Chief Financial and Chief Information Officer, invites comments on the submission for OMB review as required by the Paperwork Reduction Act of 1995.

DATES: Interested persons are invited to submit comments on or before October 28, 1998.

ADDRESSES: Written comments should be addressed to the Office of Information and Regulatory Affairs, Attention: Danny Werfel, Desk Officer, Department of Education, Office of Management and Budget, 725 17th Street, NW., Room 10235, New Executive Office Building, Washington, DC 20503 or should be electronically mailed to the internet address Werfel__d@al.eop.gov. Requests for copies of the proposed information collection requests should be addressed to Patrick J. Sherrill, Department of Education, 600 Independence Avenue, S.W., Room 5624, Regional Office Building 3, Washington, D.C. 20202–4651 or should be electronically mailed to the internet address Pat__Sherrill@ed.gov, or should be faxed to 202–708–9346.

FOR FURTHER INFORMATION CONTACT: Patrick J. Sherrill (202) 708–8196. Individuals who use a telecommunications device for the deaf (TDD) may call the Federal Information Relay Service (FIRS) at 1–800–877–8339 between 8 a.m. and 8 p.m., Eastern time, Monday through Friday.

SUPPLEMENTARY INFORMATION: Section 3506 of the Paperwork Reduction Act of 1995 (44 U.S.C. Chapter 35) requires that the Office of Management and Budget (OMB) provide interested Federal agencies and the public an early opportunity to comment on information collection requests. OMB may amend or waive the requirement for public consultation to the extent that public participation in the approval process would defeat the purpose of the information collection, violate State or Federal law, or substantially interfere with any agency's ability to perform its statutory obligations. The Chief Financial and Chief Information Officer, Office of the Chief Financial and Chief Information Officer, publishes this notice containing proposed information collection requests prior to submission of these requests to OMB. Each proposed information collection, grouped by office, contains the following: (1) Type of review requested, e.g., new, revision, extension, existing or reinstatement; (2) Title; (3) Summary of the collection; (4) Description of the need for, and proposed use of, the information; (5) Respondents and frequency of collection; and (6) Reporting and/or Recordingkeeping burden. OMB invites public comment at the address specified above. Copies of the requests are available from Patrick J. Sherrill at the address specified above.

Dated: September 23, 1998.

Donald Rappaport,

Chief Financial and Chief Information Officer, Office of the chief Financial and Chief Information Officer.

Office of Education Research and Improvement

Type of Review: Reinstatement.

Title: 21st Century Community Learning Centers Program: Application for Grants.

Frequency: Annually.

Affected Public: Businesses or other for-profits; Not-for-profit institutions; State, local or Tribal Gov't, SEAs or LEAs.

Reporting and Recordkeeping Hour Burden:

Responses: 2,000.

Burden Hours: 48,000.

Abstract: The 21st Century Community Learning Centers Program is a discretionary grants program that supports activities in rural and inner-city public schools, or consortia of such schools, to enable them to plan, implement, or expand projects that benefit the educational, health, social services, cultural and recreational needs of the community.

This information collection is being submitted under the Streamlined Clearance Process for Discretionary Grant Information Collections (OMB Control No. 1890–0001). Therefore, this 30-day public comment period notice will be the only public comment notice published for this information collection.

[FR Doc. 98–25949 Filed 9–25–98; 8:45 am]

BILLING CODE 4000–01–M

DEPARTMENT OF ENERGY

Environmental Management Site-Specific Advisory Board, Rocky Flats

AGENCY: Department of Energy.

ACTION: Notice of open meeting.

SUMMARY: Pursuant to the provisions of the Federal Advisory Committee Act (Public Law 92–463, 86 Stat. 770) notice is hereby given of the following Advisory Committee meeting: Environmental Management Site-Specific Advisory Board (EM SSAB), Rocky Flats.

DATES: Thursday, October 1, 1998: 6:00 p.m.–9:30 p.m.

ADDRESSES: Westminster City Hall, Lower-level Multi-purpose Room, 4800 West 92nd Avenue, Westminster, CO

FOR FURTHER INFORMATION CONTACT: Ken Korkia, Board/Staff Coordinator, EM SSAB–Rocky Flats, 9035 North Wadsworth Parkway, Suite 2250, Westminster, CO 80021, phone: (303) 420–7855, fax: (303) 420–7579.

SUPPLEMENTARY INFORMATION:

Purpose of the Board

The purpose of the Board is to make recommendations to DOE and its regulators in the areas of environmental restoration, waste management, and related activities.

Tentative Agenda

1. The Board will review and approve its final 1999 Work Plan and budget.
2. The Board will review and consider a revised recommendation and comments on the draft Surplus Plutonium Disposition Environmental Impact Statement.
3. The Board will consider approval of a proposal which outlines a process for involvement by the Board and the public in the Rocky Flats Actinide Migration Studies.
4. A broad discussion is planned for the Board on its restructured agenda for the next few months. As Agreed to at the annual retreat, the Board will temporarily suspend focus group meetings in favor of two full Board meetings a month, the second meeting to become a study session so the Board can focus on broader, big picture issues related to cleanup and closure.

Public Participation: The meeting is open to the public. Written statements may be filed with the Committee either before or after the meeting. Individuals who wish to make oral statements pertaining to agenda items should contact Ken Korkia at the address or telephone number listed above. Requests must be received 5 days prior to the meeting and reasonable provision will be made to include the presentation in the agenda. The Designated Federal Official is empowered to conduct the meeting in a fashion that will facilitate the orderly conduct of business. Each individual wishing to make public comment will be provided a maximum of 5 minutes to present their comments at the beginning of the meeting. This notice is being published less than 15 days in advance of the meeting due to programmatic issues that needed to be resolved prior to publication.

Minutes: The minutes of this meeting will be available for public review and copying at the Freedom of Information Public Reading Room, 1E–190, Forrestal Building, 1000 Independence Avenue, SW, Washington, DC 20585 between 9:00 a.m. and 4 p.m., Monday–Friday, except Federal holidays. Minutes will also be available at the Public Reading Room located at the Board's office at 9035 North Wadsworth Parkway, Suite 2250, Westminster, CO 80021; telephone (303) 420–7855. Hours of operation for the Public Reading Room are 9:00 am and 4:00 pm on Monday through Friday. Minutes will also be made available by writing or calling Deb Thompson at the Board's office address or telephone number listed above.

Issued at Washington, DC, on September 18, 1998

Rachel M. Samuel,

Deputy Advisory Committee Management Officer.

[FR Doc. 98–25849 Filed 9–25–98; 8:45 am]

BILLING CODE 6450–01–P

DEPARTMENT OF ENERGY

Environmental Management Site-Specific Advisory Board, Kirtland Area Office (Sandia)

AGENCY: Department of Energy.

ACTION: Notice of open meeting.

SUMMARY: Pursuant to the provisions of the Federal Advisory Committee Act (Pub. L. 92–463, 86 Stat. 770) notice is hereby given of the following Advisory Committee meeting: Environmental Management Site-Specific Advisory Board, Kirtland Area Office (Sandia).

DATES: Wednesday, October 21, 1998: 6:00 p.m.–9:00 p.m. (MST).

ADDRESSES: Cesar Chavez Community Center, 7505 Kathryn SE, Albuquerque, New Mexico.

FOR FURTHER INFORMATION CONTACT: Mike Zamorski, Acting Manager, Department of Energy Kirtland Area Office, P.O. Box 5400, Albuquerque, NM 87185 (505) 845–4094.

SUPPLEMENTARY INFORMATION:

Purpose of the Board

The purpose of the Board is to make recommendations to DOE and its regulators in the areas of environmental restoration, waste management, and related activities.

Tentative Agenda

6:00 p.m.—Call to Order/Roll Call
7:00 p.m.—Public Comments
7:10 p.m.—Approval of Agenda
7:12 p.m.—Approval of 09/23/98 Minutes
7:17 p.m.—Chairperson's Report
7:20 p.m.—Sandia National Laboratory's Environmental Restoration/Waste Management Presentation/Discussion
7:45 p.m.—Break
7:55 p.m.—Sandia National Laboratory's Environmental Restoration/Waste Management Issues Discussion
8:42 p.m.—New/Other Business
8:52 p.m.—Public Comments
8:58 p.m.—Announcement of Next Meeting
9:00 p.m.—Adjourn

A final agenda will be available at the meeting Wednesday, October 21, 1998.

Public Participation: The meeting is open to the public. Written statements may be filed with the Committee either before or after the meeting. Individuals who wish to make oral statements pertaining to agenda items should contact Mike Zamorski's office at the address or telephone number listed above. Requests must be received 5 days prior to the meeting and reasonable provision will be made to include the presentation in the agenda. The Designated Federal Officer is empowered to conduct the meeting in a fashion that will facilitate the orderly conduct of business. Each individual wishing to make public comment will be provided a maximum of 5 minutes to present their comments.

Minutes: The minutes of this meeting will be available for public review and copying at the Freedom of Information Public Reading Room, 1E–190, Forrestal Building, 1000 Independence Avenue, SW, Washington, DC 20585 between 9:00 a.m. and 4 p.m., Monday-Friday, except Federal holidays. Minutes will also be available by writing to Mike Zamorski, Department of Energy Kirtland Area Office, P.O. Box 5400, Albuquerque, NM 87185, or by calling (505) 845–4094.

Issued at Washington, DC, on September 22, 1998.

Rachel M. Samuel,

Deputy Advisory Committee Management Officer.

[FR Doc. 98–25850 Filed 9–25–98; 8:45 am]

BILLING CODE 6450–01–P

DEPARTMENT OF ENERGY

Environmental Management Site-Specific Advisory Board, Paducah

AGENCY: Department of Energy.

ACTION: Notice of open meeting.

SUMMARY: Pursuant to the provisions of the Federal Advisory Committee Act (Public Law 92–463, 86 Stat. 770) notice is hereby given of the following Advisory Committee meeting: Environmental Management Site-

Specific Advisory Board (EM SSAB), Paducah Gaseous Diffusion Plant.

DATES: Thursday, October 15, 1998: 5:30 p.m.–10:00 p.m.

ADDRESSES: Paducah Information Age Park Resource Center, 2000 McCracken Boulevard, Paducah, Kentucky.

FOR FURTHER INFORMATION CONTACT: John D. Sheppard, Site-Specific Advisory Board Coordinator, Department of Energy Paducah Site Office, Post Office Box 1410, MS–103, Paducah, Kentucky 42001, (502) 441–6804.

SUPPLEMENTARY INFORMATION:

Purpose of the Board

The purpose of the Board is to make recommendations to DOE and its regulators in the areas of environmental restoration, waste management, and related activities.

Tentative Agenda

5:30 p.m.—Call to Order
5:45 p.m.—Approve Meeting Minutes
6:00 p.m.—Public Comment/Questions
6:30 p.m.—Presentations
7:30 p.m.—Break
7:45 p.m.—Presentations
9:00 p.m.—Public Comment
9:30 p.m.—Administrative Issues
10:00 p.m.—Adjourn

Copies of the final agenda will be available at the meeting.

Public Participation: The meeting is open to the public. Written statements may be filed with the Committee either before or after the meeting. Individuals who wish to make oral statements pertaining to agenda items should contact John D. Sheppard at the address or telephone number listed above. Requests must be received 5 days prior to the meeting and reasonable provision will be made to include the presentation in the agenda. The Designated Federal Officer is empowered to conduct the meeting in a fashion that will facilitate the orderly conduct of business. Each individual wishing to make public comment will be provided a maximum of 5 minutes to present their comments as the first item on the meeting agenda.

Minutes: The minutes of this meeting will be available for public review and copying at the Freedom of Information Public Reading Room, 1E–190, Forrestal Building, 1000 Independence Avenue, SW, Washington, DC 20585 between 9:00 a.m. and 4 p.m., Monday-Friday, except Federal holidays. Minutes will also be available at the Department of Energy's Environmental Information and Reading Room at 175 Freedom Boulevard, Highway 60, Kevil, Kentucky between 8:00 a.m. and 5:00 p.m. on Monday through Friday, or by writing to John D. Sheppard, Department of Energy Paducah Site Office, Post Office Box 1410, MS–103, Paducah, Kentucky 42001, or by calling him at (502) 441–6804.

Issued at Washington, DC, on September 22, 1998.

Rachel M. Samuel,

Deputy Advisory Committee Management Officer.

[FR Doc. 98–25851 Filed 9–25–98; 8:45 am]

BILLING CODE 6450–01–P

DEPARTMENT OF ENERGY

Office of Fossil Energy

[Docket No. FE C&E 98–07—Certification Notice—162]

Panda Paris Power, L.P. Notice of Filing of Coal Capability Powerplant and Industrial Fuel Use Act

AGENCY: Office of Fossil Energy, Department of Energy.

ACTION: Notice of filing.

SUMMARY: On September 4, 1998, Panda Paris Power submitted a coal capability self-certification pursuant to section 201 of the Powerplant and Industrial Fuel Use Act of 1978, as amended.

ADDRESSES: Copies of self-certification filings are available for public inspection, upon request, in the Office of Coal & Power Im/Ex, Fossil Energy, Room 4G–039, FE–27, Forrestal Building, 1000 Independence Avenue, SW, Washington, DC 20585.

FOR FURTHER INFORMATION CONTACT: Ellen Russell at (202) 586–9624.

SUPPLEMENTARY INFORMATION: Title II of the Powerplant and Industrial Fuel Use Act of 1978 (FUA), as amended (42 U.S.C. 8301 *et seq.*), provides that no new baseload electric powerplant may be constructed or operated without the capability to use coal or another alternate fuel as a primary energy source. In order to meet the requirement of coal capability, the owner or operator of such facilities proposing to use natural gas or petroleum as its primary energy source shall certify, pursuant to FUA section 201(d), to the Secretary of Energy prior to construction, or prior to operation as a base load powerplant, that such powerplant has the capability to use coal or another alternate fuel. Such certification establishes compliance with section 201(a) as of the date filed with the Department of Energy. The Secretary is required to publish a notice in the **Federal Register** that a certification has been filed. The following owner/operator of the proposed new baseload powerplant has filed a self-certification in acccordance with section 201(d).

Owner: Panda Paris Power, L.P.
Operator: Panda Paris Power, L.P.
Location: Paris, Lamar County, TX.
Plant Configuration: Combined-cycle.
Capacity: 1,000 megawatts.
Fuel: Natural gas.
Purchasing Entities: 20% will be sold to Texas Utilities Electric Company. The remaining 80% will be sold to various merchants.
In-Service Date: Late 1999.

Issued in Washington, DC, September 17, 1998.

Anthony J. Como,

Manager, Electric Power Regulation, Office of Coal & Power Im/Ex, Office of Coal & Power Systems, Office of Fossil Energy.

[FR Doc. 98–25852 Filed 9–25–98; 8:45 am]

BILLING CODE 6450–01–P

DEPARTMENT OF ENERGY

Office of Energy Efficiency and Renewable Energy

Advisory Committee on Appliance Energy Efficiency Standards

AGENCY: Department of Energy.

ACTION: Notice of open meeting.

SUMMARY: Pursuant to the provisions of the Federal Advisory Committee Act (Pub. L. 92–463, 86 Stat. 770), notice is hereby given of a meeting of the Advisory Committee on Appliance Energy Efficiency Standards (ACAES). The Department will consider the information and comments received at this meeting in the conduct of its appliance standards program.

DATES: October 29, 1998, 9:00 a.m.–4:30 p.m.

ADDRESSES: Holiday Inn Capitol, 550 C Street, SW, Washington DC 20024, (202) 479–4000.

FOR FURTHER INFORMATION CONTACT: Sandy Beall, U.S. Department of Energy, Office of Energy Efficiency and Renewable Energy, Forrestal Building, Mail Station EE–43, 1000 Independence Avenue, SW, Washington, DC 20585–0121, (202) 586–7574, or Brenda Edwards-Jones, U.S. Department of Energy, Office of Energy Efficiency and Renewable Energy, Forrestal Building, Mail Station EE–43, 1000 Independence Avenue, SW, Washington, DC 20585–0121, (202) 586–2945.

SUPPLEMENTARY INFORMATION:

Purpose of the Committee

The Advisory Committee on Appliance Energy Efficiency Standards was established to provide input on the appliance standards rulemaking

process. The Committee serves as the focal point for discussion on the implementation of the procedures, interpretations, and policies set forth in the rule on ''Procedures for Consideration of New or Revised Energy Conservation Standards for Consumer Products,'' 61 FR 36973 (July 15, 1996), and on crosscutting analytical issues affecting all product standard rulemakings.

Tentative Agenda

9:00 am Chairman's Remarks
9:15 am Introductions and Agenda Review
- Introduction
- Agenda Review

9:55 am FY 1999 Priority Setting
- 1998 and 1999 Review
- Problems and Suggested Resolutions
- Comments/Discussion

10:25 am Break
10:40 am Status
- Standards
- Test Procedures

11:00 am Incorporation of Advisory Committee Recommendations
- Overview
- Status of Incorporating Responses into Rulemakings

12:00 pm Lunch
1:00 pm Comments Regarding Advisory Committee Recommendations
- Transparent and Robust Analytical Methods
- Forecast Future Electricity Prices

2:00 pm Public Comment
2:15 pm Break
2:30 pm DOE Consumer Analysis
- DOE Strategies

3:00 pm New Business
- Establish New Subcommittee on Process Refinement
- Review Status of Existing Subcommittees

3:45 pm Action Items and Deliverables for Next Meeting
4:00 pm Public Comment
4:15 pm Chairman's Closing Remarks
4:30 pm Adjourn

Please note that this draft agenda is preliminary. The times and agenda items listed are guidelines and are subject to change. A final agenda will be available at the meeting on Thursday, October 29, 1998.

Consumer Issues

In 1997, the ACAES created a subcommittee to address consumer issues. However, this subcommittee has been inactive in 1998. The Department is interested in addressing consumer issues in its rulemakings. If you have any issues which you would like to be addressed by the consumer subcommittee or if you have interest in participating in this subcommittee, please contact Ms. Sandy Beall at the address and phone number listed in the **FOR FURTHER INFORMATION CONTACT** section.

Public Participation

The meeting is open to the public. Please notify either Brenda Edwards-Jones, (202) 586–2945, or Sandy Beall, (202) 586–7574, if you plan to attend the Advisory Committee meeting. Written statements may be filed either before or after the meeting. In order to have your written comments distributed at the Advisory Committee meeting, please provide 10 copies to the contacts listed in the **FOR FURTHER INFORMATION CONTACT** section at least 7 days prior to the meeting. Members of the public who wish to make oral statements should contact the Office of Codes and Standards at the address or telephone numbers listed in the **FOR FURTHER INFORMATION CONTACT** section. Requests must be received 7 days prior to the meeting, and a reasonable provision will be made to include the presentation in the agenda. Such presentations may be limited to five minutes. The Designated Federal Official is empowered to conduct the meeting in a fashion that will facilitate the orderly conduct of business.

Minutes

Copies of the Committee's charter, minutes of the Committee meetings, this notice, and other correspondence regarding the Committee may be viewed at the U.S. Department of Energy, Freedom of Information Public Reading Room, Forrestal Building, Room 1E–190, 1000 Independence Avenue, SW, Washington, DC 20585, (202) 586–6020, between the hours of 9:00 a.m. and 4:00 p.m., Monday through Friday, except Federal holidays. A copy of the Committee's meeting transcript will be available in the DOE public reading room approximately 10 days after the meeting. Minutes will also be available 60 days after the meeting by writing to Brenda Edwards-Jones or Sandy Beall at the address listed in the **FOR FURTHER INFORMATION CONTACT** section.

Issued in Washington, DC, on September 22, 1998.

Rachel M. Samuel,

Deputy Advisory Committee Management Officer.

[FR Doc. 98–25853 Filed 9–25–98; 8:45 am]

BILLING CODE 6450–01–P

DEPARTMENT OF ENERGY

Federal Energy Regulatory Commission

[Docket No. CP98–784–000]

Crossroads Pipeline Company; Notice of Request Under Blanket Authorization

September 22, 1998.

Take notice that on September 15, 1998, Crossroads Pipeline Company (Crossroads), 801 E. 86th Avenue, Merrillville, Indiana 46410, filed in Docket No. CP98–784–000 a request pursuant to Sections 157.205, 157.211 and 157.216 of the Commission's Regulations under the Natural Gas Act (18 CFR 157.205, 157.211, 157.216) for authorization to relocate an existing delivery point in Indiana, under Crossroad's blanket certificate issued in Docket No. CP94–342–001 pursuant to Section 7 of the Natural Gas Act, all as more fully set forth in the request that is on file with the Commission and open to public inspection.

Crossroads proposes to abandon its Kendallville delivery station and construct a new delivery station on crossroads existing 20-inch mainline at approximately mile post 106 near Albion, Indiana. Crossroads states that it will provide natural gas deliveries to Northern Indiana Fuel and Light (NIFL) a local distribution company. NIFL will reimburse Crossroads for 100% of the cost and expenses that it will incur for installing the facilities. Such costs and expenses are estimated to be approximately $200,000. Crossroads states that the installation of the delivery point will have no effect on its peak day or annual deliveries, that its existing tariff does not prohibit the additional point, that deliveries will be accomplished without detriment or disadvantage to its other customers and that the total volumes delivered will not exceed total volumes authorized prior to this request.

Any person or the Commission's staff may, within 45 days after issuance of the instant notice by the Commission, file pursuant to Rule 214 of the Commission's Procedural Rules (18 CFR 385.214) a motion to intervene or notice of intervention and pursuant to Section 157.205 of the Regulations under the Natural Gas Act (18 CFR 157.205) a protest to the request. If no protest is filed within the time allowed therefor, the proposed activity shall be deemed to be authorized effective the day after the time allowed for filing a protest. If a protest is filed and not withdrawn within 30 days after the time allowed for filing a protest, the instant request

shall be treated as an application for authorization pursuant to Section 7 of the Natural Gas Act.

David P. Boergers,

Secretary.

[FR Doc. 98–25786 Filed 9–25–98; 8:45 am]

BILLING CODE 6717–01–M

DEPARTMENT OF ENERGY

Federal Energy Regulatory Commission

[Docket No. ER98–3813–000]

DukeSolutions, Inc.; Notice of Issuance of Order

September 22, 1998.

DukeSolutions, Inc. (DukeSolutions), a power marketer wholly owned by Duke Energy Corporation, filed an application requesting that the Commission authorize it to make wholesale sales of electric capacity and energy at market-based rates, and for certain waivers and authorizations. In particular, DukeSolutions requested that the Commission grant blanket approval under 18 CFR Part 34 of all future issuances of securities and assumptions of liabilities by DukeSolutions. On September 17, 1998, the Commission issued an Order Accepting Filings And Granting Request For Market Based Rates (Order), in the above-docketed proceeding.

The Commission's September 17, 1998 Order granted the request for blanket approval under Part 34, subject to the conditions found in Ordering Paragraphs (I), (J), and (L):

(I) Within 30 days of the date of issuance of this order, any person desiring to be heard or to protest the Commission's blanket approval of issuances of securities or assumptions of liabilities by DukeSolutions should file a motion to intervene or protest with the Federal Energy Regulatory Commission, 888 First Street, NE., Washington, DC 20426, in accordance with Rules 211 and 214 of the Commission's Rules of Practice and Procedure, 18 CFR 385.211 and 385.214.

(J) Absent a request to be heard within the period set forth in Ordering Paragraph (I) above, DukeSolutions is hereby authorized to issue securities and assume obligations and liabilities as guarantor, indorser, surety or otherwise in respect of any security of another person; provided that such issue or assumption is for some lawful object within the corporate purposes of DukeSolutions, compatible with the public interest, and reasonably necessary or appropriate for such purposes.

(L) The Commission reserves the right to modify this order to require a further showing that neither public nor private interests will be adversely affected by continued Commission approval of DukeSolutions' issuances of securities or assumptions of liabilities * * *.

Notice is hereby given that the deadline for filing motions to intervene or protests, as set forth above, is October 19, 1998.

Copies of the full text of the Order are available from the Commission's Public Reference Branch, 888 First Street, NE., Washington, DC 20426.

David P. Boergers,

Secretary.

[FR Doc. 98–25793 Filed 9–25–98; 8:45 am]

BILLING CODE 6717–01–M

DEPARTMENT OF ENERGY

Federal Energy Regulatory Commission

[Docket No. CP98–775–000]

Eastern Shore Natural Gas Company; Notice of Request Under Blanket Authorization

September 22, 1998.

Take notice that on September 15, 1998, Eastern Shore Natural Gas Company (Eastern Shore), Post Office Box 1769, Dover, Delaware 19903–1769, filed a request with the Commission in Docket No. CP98–775–000, pursuant to Sections 157.205 and 157.212 of the Commission's Regulations under the Natural Gas Act (NGA) for authorization to add one new delivery point for Delmarva Power and Light Corporation (DP&L) and add one new Delivery point for Star Enterprise (Star), both existing customers authorized in blanket certificate issued in Docket No. CP83–40–000, all as more fully set forth in the request on file with the Commission and open to public inspection.

Eastern Shore proposes to construct and operate one delivery point and associated facilities near School House Road near Delaware City, New Castle County, Delaware to serve DP&L and one delivery point and associated facilities near Governor Lea Road near Delaware City, New Castle County, Delaware to serve Star.

Eastern Shore asserts that the delivery of gas through the new taps would be within the customer's existing entitlements, that there would be no adverse impact on Eastern Shore's other customer's peak and annual deliveries, and that no additional facilities would be required to serve the new delivery points other than a meter and regulating stations and service laterals, the costs of which would be paid for by DP&L and Star.

Any person or the Commission's staff may, within 45 days after the Commission has issued this notice, file pursuant to Rule 214 of the Commission's Procedural Rules (18 CFR 385.214) a motion to intervene or notice of intervention and pursuant to Section 15.205 of the Regulations under the NGA (18 CFR 157.205) a protest to the request. If no protest is filed within the allowed time, the proposed activity will be deemed to be authorized effective the day after the time allowed for filing a protest. If a protest is filed and not withdrawn within 30 days after the time allowed for filing a protest, the instant request will be treated as an application for authorization pursuant to Section 7 of the NGA.

David P. Boergers,

Secretary.

[FR Doc. 98–25784 Filed 9–25–98; 8:45 am]

BILLING CODE 6717–01–M

DEPARTMENT OF ENERGY

Federal Energy Regulatory Commission

[Docket No. CP98–773–000]

Florida Gas Transmission Company; Notice of Request Under Blanket Authorization

September 22, 1998.

Take notice that on September 10, 1998, Florida Gas Transmission Company (FGT), 1400 Smith Street, Houston, Texas 77002, filed in Docket No. CP98–773–000 a request pursuant to Sections 157.205 and 157.212 of the Commission's Regulations under the natural Gas Act (18 CFR 157.205 and 157.212) for authorization to construct and operate a new delivery point in Citrus County, Florida for Chesapeake Utilities Corporation (Chesapeake). FGT makes such request under its blanket certificate issued in Docket No. CP82–553–000 pursuant to Section 7 of the Natural Gas Act, all as more fully set forth in the request on file with the Commission and open to public inspection.

FGT proposes to construct, operate, and own an additional delivery point in Citrus County of Chesapeake at or near mile post 87.5 on FGT's existing 30-inch West Leg Lateral FGT states that the subject delivery point will include a tap, minor connecting pipe, electronic flow measurement equipment, and any other related appurtenant facilities necessary for FGT to transport for and deliver to Chesapeake up to 1,250 MMBTu of natural gas per day and 456,250 per

year. It is stated that the end-use of the gas will be commercial, industrial, and residential, and that the volumes will be within authorized levels of service. FGT estimates the construction cost to be approximately $74,000 and indicates that Chesapeake will reimburse that cost. FGT further states that Chesapeake will construct, own, and operate the meter and regulation station.

Any person or the Commission's staff may, within 45 days after issuance of the instant notice by the Commission, file pursuant to Rule 214 of the Commission's Procedural Rules (18 CFR 285.214) a motion to intervene or notice of intervention and pursuant to Section 157.205 of the Regulations under the Natural Gas Act (18 CFR 157.205) a protest to the request. If no protest is filed within the time allowed therefor, the proposed activity shall be deemed to be authorized effective the day after the time allowed for filing a protest. If a protest is filed and not withdrawn within 30 days after the time allowed for filing a protest, the instant request shall be treated as an application for authorization pursuant to Section 7 of the Natural Gas Act.

David P. Boergers,

Secretary.

[FR Doc. 98–25783 Filed 9–25–98; 8:45 am]

BILLING CODE 6717–01–M

DEPARTMENT OF ENERGY

Federal Energy Regulatory Commission

[Docket No. TM98–2–53–006]

KN Interstate Gas Transmission Co.; Notice of Tariff Filing

September 22, 1998.

Take notice that on September 16, 1998, KN Interstate Gas Transmission Co. (KNI) tendered for filing to become a part of KNI's FERC Gas Tariff, First Revised Volume No. 1–D, the following revised tariff sheets to be effective August 1, 1998:

Second Revised Sheet No. 21

KNI is making this filing pursuant to the Commission's Letter Order dated August 17, 1998 in Docket No. TM98–2–53.

KNI states that copies of the filing were served upon all affected firm customers of KNI and applicable state agencies.

Any person desiring to protest this filing should file a protest with the Federal Energy Regulatory Commission, 888 First Street, N.E., Washington, D.C. 20426, in accordance with Section 385.211 of the Commission's Rules and Regulations. All such protests must be filed as provided in Section 154.210 of the Commission's Regulations. Protests will be considered by the Commission in determining the appropriate action to be taken, but will not serve to make protestants parties to the proceedings. Copies of this filing are on file with the Commission and are available for public inspection in the Public Reference Room.

David P. Boergers,

Secretary.

[FR Doc. 98–25791 Filed 9–25–98; 8:45 am]

BILLING CODE 6717–01–M

DEPARTMENT OF ENERGY

Federal Energy Regulatory Commission

[Docket No. CP98–776–000]

NorAm Gas Transmission Company; Notice of Request Under Blanket Authorization

September 22, 1998.

Take notice that on September 14, 1998, NorAm Gas Transmission Company (NGT), 1600 Smith Street, Houston, Texas 77002, filed in Docket No. CP98–776–000 a request pursuant to Sections 157.205 and 157.216 of the Commission's Regulations under the Natural Gas Act (18 CFR 157.205, 157.216) for authorization to abandon certain facilities in Arkansas, under NGT's blanket certificate issued in Docket No. CP82–384–000 and CP82–384–001 pursuant to Section 7 of the Natural Gas Act, all as more fully set forth in the request that is on file with the Commission and open to public inspection.

By this application, NGT seeks the Commission's authority to abandon a compressor station in Conway County, Arkansas. Specifically, NGT seeks authority to abandon a 660 horsepower compressor station, including the building the unit is housed and all other appurtenant equipment and facilities associated with the compressor station. NGT states that the compressor and above ground facilities will be removed and the station piping will be cut and capped and abandoned in place. NGT estimates the cost of abandonment and removal of the unit will be approximately $41,842. NGT states that the subject facilities are located on NGT's Line B, a 10-inch lateral line, in Conway County, Arkansas in Section 17, Township 6 North, Range 16 West at Station Number 2084+26. NGT also states that these facilities, designated as the Morrilton Compressor Station, were certificated in FERC Docket No. CP68–344 and were used to facilitate deliveries to Arkla, a division of NorAm Energy Corporation for service to small rural distribution towns in central Arkansas. NGT further states that the station has not been in use since 1991, and is no longer needed to provide deliveries to NGT's existing customers. NGT states that, upon abandonment, any equipment removed will be junked at no value.

Any person or the Commission's staff may, within 45 days after issuance of the instant notice by the Commission, file pursuant to Rule 214 of the Commission's Procedural Rules (18 CFR 385.214) a motion to intervene or notice of intervention and pursuant to Section 157.205 of the Regulations under the Natural Gas Act (18 CFR 157.205) a protest to the request. If no protest is filed within the time allowed therefor, the proposed activity shall be deemed to be authorized effective the day after the time allowed for filing a protest. If a protest is filed and not withdrawn within 30 days after the time allowed for filing a protest, the instant request shall be treated as an application for authorization pursuant to Section 7 of the Natural Gas Act.

David P. Boergers,

Secretary.

[FR Doc. 98–25785 Filed 9–25–98; 8:45 am]

BILLING CODE 6717–01–M

DEPARTMENT OF ENERGY

Federal Energy Regulatory Commission

[Docket No. CP98–786–000]

Northern Natural Gas Company; Notice of Request Under blanket Authorization

September 22, 1998.

Take notice that on September 15, 1998, Northern Natural Gas Company (Northern), 1111 South 103rd Street, Omaha, Nebraska 68124–1000, filed in Docket No. CP98–786–000 a request pursuant to Sections 157.205 and 157.216 of the Commission's Regulations under the natural Gas Act (18 CFR 157.205, 157.216) for authorization to abandon 90 small volume measuring stations, located in Iowa, Minnesota, Nebraska, South Dakota and Wisconsin, under Northern's blanket certificate issued in Docket No. CP82–401–000 pursuant to Section 7 of the Natural Gas Act, all as more fully set forth in the request that is on file with Commission and open to public inspection.

Northern proposes to abandon 90 small-volume measuring stations

located in Iowa, Minnesota, Nebraska, South Dakota and Wisconsin. Northern states that the end-users have requested the removal of these measuring stations from their property. Northern also states that the stations will be abandoned and removed in accordance with all applicable environmental laws and regulations, and that the sites will be restored in accordance with the desires of the landowners.

Any person or the Commission's staff may, within 45 days after issuance of the instant notice by the Commission, file pursuant to Rule 214 of the Commission's Procedural Rules (18 CFR 285.214) a motion to intervene or notice of intervention and pursuant to Section 157.205 of the Regulations under the Natural Gas Act (18 CFR 157.205) a protest to the request. If no protest is filed within the time allowed therefor, the proposed activity shall be deemed to be authorized effective the day after the time allowed for filing a protest. If a protest is filed and not withdrawn within 30 days after the time allowed for filing a protest, the instant request shall be treated as an application for authorization pursuant to Section 7 of the Natural Gas Act.

David P. Boergers,

Secretary.

[FR Doc. 98–25787 Filed 9–25–98; 8:45 am]

BILLING CODE 6717–01–M

DEPARTMENT OF ENERGY

Federal Energy Regulatory Commission

[Docket No. CP98–779–000]

Northern Natural Gas Company; Notice of Request Under Blanket Authorization

September 21, 1998.

Take notice that on September 14, 1998, Northern Natural Gas Company (Northern), 1111 South 103rd Street, Omaha, Nebraska 68124–1000, filed in Docket No. CP98–779–000 a request pursuant to Sections 157.205 and 157.212 of the Commission's Regulations under the Natural Gas Act (18 CFR 157.205 and 157.212) for authorization to install and operate a new delivery point in Woodward County, Oklahoma to accommodate natural gas deliveries to West Texas Gas, Inc., (West Texas). Northern makes such request under its blanket certificate issued in Docket No. CP82–401–000 pursuant to Section 7 of the Natural Gas Act, all as more fully set forth in the request on file with the Commission and open to public inspection.

Northern states that West Texas has requested the proposed delivery point to serve a residential customer. Northern accordingly submits this request for authorization to deliver up to 3 MMBtu of natural gas to West Texas on a peak day and 750 MMBtu annually. It is stated that the proposed volumes to be delivered to West Texas will not exceed the total volumes authorized prior to this request. The total estimated cost to install the delivery point is $6,300.00, and Northern avers that the facilities described herein will be financed in accordance with the General Terms and Conditions of Northern's FERC Gas Tariff.

Any person or the Commission's staff may, within 45 days after issuance of the instant notice by the Commission, file pursuant to Rule 214 of the Commission's Procedural Rules (18 CFR 385.214) a motion to intervene or notice of intervention and pursuant to Section 157.205 of the Regulations under the Natural Gas Act (18 CFR 157.205) a protest to the request. If no protest is filed within the time allowed therefor, the proposed activity shall be deemed to be authorized effective the day after the time allowed for filing a protest. If a protest is filed and not withdrawn within 30 days after the time allowed for filing a protest, the instant request shall be treated as an application for authorization pursuant to Section 7 of the Natural Gas Act.

David P. Boergers,

Secretary.

[FR Doc. 98–25792 Filed 9–25–98; 8:45 am]

BILLING CODE 6717–01–M

DEPARTMENT OF ENERGY

Federal Energy Regulatory Commission

[Docket No. RP98–371–002]

Williams Gas Pipelines Central, Inc.; Notice of Proposed Changes in FERC Gas Tariff

September 22, 1998.

Take notice that on September 17, 1998, Williams Gas Pipelines Central, Inc. (Williams), tendered for filing to become part of its FERC Gas Tariff, Original Volume No. 1, the following tariff sheets, with the proposed effective date of September 3, 1998:

Substitute Fourth Revised Sheet No. 6A
Substitute Original Sheet No. 153

Williams states that it made a filing on August 3, 1998, in the above referenced docket. By order issued September 2, 1998, the Commission directed Williams to file information and revised tariff sheets within 15 days of the issuance of the order consistent with the discussion in the body of the order Williams states that the instant filing is being made to comply with the order.

Williams states that a copy of its filing was served on all participants listed on the service lists maintained by the Commission in the dockets referenced above and on all of Williams' jurisdictional customers and interested state commissions.

Any person desiring to protest this filing should file a protest with the Federal Energy Regulatory Commission, 888 First Street, N.E., Washington, D.C. 20426, in accordance with Section 385.211 of the commission's Rules and Regulations. All such protests must be filed as provided in Section 154.210 of the Commission's Regulations. Protests will be considered by the Commission in determining the appropriate action to be taken, but will not serve to make protestants parties to the proceedings. Copies of this filing are on file with the Commission and are available for public inspection in the Public Reference Room.

David P. Boergers,

Secretary.

[FR Doc. 98–25789 Filed 9–25–98; 8:45 am]

BILLING CODE 6717–01–M

DEPARTMENT OF ENERGY

Federal Energy Regulatory Commission

[Docket No. RP98–403–000]

Young Gas Storage Company, Ltd.; Notice of Proposed Changes in FERC Gas Tariff

September 22, 1998.

Take notice that on September 15, 1998, Young Gas Storage Company, Ltd. (Young), tendered for filing to become part of its FERC Gas Tariff, Original Volume No. 1, The tariff sheets listed on Appendix A to the filing, to be effective November 2, 1998.

Young states that the purpose of this compliance filing is to conform Young's tariff to requirements of Order No. 587–H.

Young states that copies of the filing have been mailed to all affected customers and state regulatory commissions.

Any person desiring to be heard or to protest said filing should file a motion to intervene or a protest with the Federal Energy Regulatory Commission, 888 First Street, NE, Washington, DC 20426, in accordance with Section 385.214 or 385.211 of the Commission's

Rules and Regulations. All such motions or protests must be filed in accordance with Section 154.210 of the Commission in determining the appropriate action to be taken, but will not serve to make protestants parties to the proceedings. Any person wishing to become a party must file a motion to intervene. Copies of this filing are on file with the Commission and are available for public inspection in the Public Reference Room.

David P. Boergers,

Secretary.

[FR Doc. 98–25790 Filed 9–25–98; 8:45 am]

BILLING CODE 6717–01–M

DEPARTMENT OF ENERGY

Federal Energy Regulatory Commission

Notice of Application Accepted for Filing; Notice of Solicitation of Interventions and Protests; and Notice That the Application Is Ready for Environmental Analysis

September 22, 1998.

Take notice that the following hydroelectric application has been filed with the Commission and is available for public inspection:

a. *Type of Application:* Exemption of Small Conduit Hydroelectric Facility.

b. *Project No.:* P–11531–001.

c. *Date filed:* July 21, 1998.

d. *Applicant:* The City of Boulder, Colorado.

e. *Name of Project:* Silver Lake Hydroelectric Project.

f. *Location:* At the terminus of the applicant's existing Silver Lake raw water pipeline, near the City of Boulder, in Boulder County, Colorado.

g. *Filed Pursuant to:* Federal Power Act 16 U.S.C. 791(a)–825(r).

h. *Applicant Contact:* Eva June Busse, P.E., Hydroelectric Projects Manager, City of Boulder, P.O. Box 791, Boulder, CO 80306–0791, (303) 441–4271.

i. *FERC Contact:* Bob Easton, (202) 219–2782.

j. *Status of Application and Environmental Analysis:* This application has been accepted for filing and is ready for environmental analysis at this time—see attached paragraph D4.

k. *Comment Date:* See Paragraph D4.

l. *Description of Project:* The proposed project would consist of: (1) the existing reinforced concrete Silver Lake diversion intake structure; (2) the existing 18,820-foot-long, 27-inch-diameter welded steel Silver Lake pipeline; (3) a proposed powerhouse containing one generating unit having an installed capacity of 3.2 megawatts; (4) discharge facilities into Lakewood Reservoir; (5) a proposed transmission line; (6) a proposed switchyard; and (7) appurtenant facilities.

m. *This notice also consists of the following standard paragraphs:* A2, A9, B, and D4.

n. *Invitation to Intervene or Protest:* Intervenors are reminded of the Commission's Rules of Practice and Procedure requiring parties filing documents with the Commission to serve a copy of the document on each person whose name appears on the official service list for the project. Further, if a party or intervenor files comments or documents with the Commission relating to the merits of an issue that may affect the responsibilities of a particular resource agency, they must also serve a copy of the document on that resource agency. See attached paragraph B.

o. *Locations of the Application:* A copy of the application is available for inspection and reproduction at the Commission's Public Reference and Files Maintenance Branch, located at 888 First Street, N.E., Washington, D.C. 20426, or by calling (202) 208–2326. A copy is also available for inspection and production at the address shown in item h above.

A2. Development Application—Any qualified applicant desiring to file a competing application must submit to the Commission, on or before the specified deadline date for the particular application, a competing development application, or a notice of intent to file such an application. Submission of a timely notice of intent allows an interested person to file the competing development application no later than 120 days after the specified deadline date for the particular application. Applications for preliminary permits will not be accepted in response to this notice.

A9. Notice of intent—A notice of intent must specify the exact name, business address, and telephone number of the prospective applicant, and must include an unequivocal statement of intent to submit, if such an application may be filed, either a preliminary permit application or a development application (specify which type of application). A notice of intent must be served on the applicant(s) named in this public notice.

B. Comments, Protests, or Motions to Intervene—Anyone may submit comments, a protest, or a motion to intervene in accordance with the requirements of Rules of Practice and Procedure, 18 CFR 385.210, .211, .214. In determining the appropriate action to take, the Commission will consider all protests or other comments filed, but only those who file a motion to intervene in accordance with the Commission's Rules may become a party to the proceeding. Any comments, protests, or motions to intervene must be received on or before the specified comment date for the particular application.

D4. Filing and Service of Responsive Documents—The application is ready for environmental analysis at this time, and the Commission is requesting comments, reply comments, recommendations, terms and conditions, and prescriptions.

The Commission directs, pursuant to Section 4.34(b) of the Regulations (see Order No. 533 issued May 8, 1991, 56 FR 23108, May 20, 1991) that all comments, recommendations, terms and conditions and prescription concerning the application be filed with the Commission within 60 days from the issuance date of this notice. All reply comments must be filed with the Commission within 105 days from the date of this Notice.

Anyone may obtain an extension of time for these deadlines from the Commission only upon a showing of good cause or extraordinary circumstances in accordance with 18 CFR 385.2008.

All filings must (1) bear in all capital letters the title ''PROTEST'', ''MOTION TO INTERVENE'', ''NOTICE OF INTENT TO FILE COMPETING APPLICATION,'' ''COMPETING APPLICATION,'' ''COMMENTS,'' ''REPLY COMMENTS,'' ''RECOMMENDATIONS,'' ''TERMS AND CONDITIONS,'' or ''PRESCRIPTIONS;''; (2) set forth in the heading the name of the applicant and the project number of the application to which the filing responds; (3) furnish the name, address, and telephone number of the person protesting or intervening; and (4) otherwise comply with the requirements of 18 CFR 385.2001 through 385.2005. All comments, recommendations, terms and conditions or prescriptions must set forth their evidentiary basis and otherwise comply with the requirements of 18 CFR 4.34(b). Agencies may obtain copies of the application directly from the applicant. Any of these documents must be filed by providing the original and the number of copies required by the Commission's regulations to: The Secretary, Federal Energy Regulatory Commission, 888 First Street, N.E., Washington, D.C. 20426. An additional copy must be sent to Director, Division of Project Review, Office of Hydropower Licensing, Federal Energy Regulatory Commission, at the above address. A

copy of any protest or motion to intervene must be served upon each representative of the applicant specified in the particular application. A copy of all other filings in reference to this application must be accompanied by proof of service on all persons listed in the service list prepared by the Commission in this proceeding, in accordance with 18 CFR 4.34(b) and 385.2010.

David P. Boergers,

Secretary.

[FR Doc. 98–25788 Filed 9–25–98; 8:45 am]

BILLING CODE 6717–01–M

ENVIRONMENTAL PROTECTION AGENCY

[FRL–6169–4]

Proposed De Minimis Settlement Pursuant to the Comprehensive, Environmental Response, Compensation, and Liability Act (CERCLA), as Amended by the Superfund Amendments and Reauthorization Act—Hansen Container Site, Grand Junction, CO

AGENCY: Environemntal Protection Agency.

ACTION: Notice and request for public comment.

SUMMARY: In accordance with the requirements of section 122(i)(1) of the Comprehensive Environmental Response, Compensation, and Liability Act, as amended (CERCLA), notice is hereby given of a proposed de minimis settlement under section 122(g), concerning the Hansen Container site in Grand Junction, Colorado (Site). The proposed Administrative Order on Consent (AOC) requires one (1) Potentially Responsible Party to Pay a total of $19,706.85 to address its liability to the United States Environmental Protection Agency (EPA) related to response actions taken at the Site.

DATES: Comments must be submitted on or before October 28, 1998.

ADDRESSES: The Proposed settlement is available for public inspection at the EPA Superfund Record Center, 999 18th Street, 5th Floor, North Tower, Denver, Colorado. Comments should be addressed to Maureen O'Reilly, Enforcement Specialist, (8ENF–T), U.S. Environmental Protection Agency, 999 18th Street, Suite 500, Denver, Colorado 80202–2405, and should reference the Hansen Container *de minimis* settlement.

FOR FURTHER INFORMATION CONTACT: Maureen O'Reilly, Enforcement Specialist, at (303) 312–6402.

SUPPLEMENTARY INFORMATION: Notice of section 122(g) de minimis settlement: In accordance with section 122(i)(1) of CERCLA, notice is hereby given that the terms of an Administrative Order on Consent (AOC) has been agreed to by Hercules, now know as Alliant TechSystems in the amount of $19,706.85.

In exchange for payment, EPA will provide the settling party with a limited covenant not to sue for liability under sections 106 and 107(a) of CERCLA, including liability for EPA's past costs, the cost of the remedy, and future EPA oversight costs.

The amount that this potentially liable party (PRP) will pay, as shown above, reflects the number of drums that this PRP sent to the Site that had hazardous materials in them. The cost per drum is $3.24. The total amount of settlement dollars owed by this party was arrived at by multiplying the price per drum by the number of drums a party sent to the Site (Base Amount) plus a premium payment of 30% of the Base Amount.

For a period of thirty (30) days from the date of this publication, the public may submit comments to EPA relating to this proposed de minimis settlement.

A copy of the proposed AOC may be obtained from the Superfund Records Center at the regional offices of the U.S. Environmental Protection Agency, Region VIII, 999 18th Street, Suite 500, Denver, Colorado 80202–2405, (303) 312–7069. Additional background information relating to the de minimis settlement is available for review at the Superfund Records Center at the above address.

Dated: September 15, 1998.

Jack McGraw,

Acting Regional Administrator, Region VIII.

[FR Doc. 98–25893 Filed 9–25–98; 8:45 am]

BILLING CODE 6560–50–M

FEDERAL COMMUNICATIONS COMMISSION

[Report No. 2298]

Petitions for Reconsideration and Clarification of Action in Rulemaking Proceeding

September 22, 1998.

Petitions for reconsideration and clarification have been filed in the Commission's rulemaking proceedings listed in this Public Notice and published pursuant to 47 CFR Section 1.429(e). The full text of these documents are available for viewing and copying in Room 239, 1919 M Street, NW., Washington, DC or may be purchased from the Commission's copy contractor, ITS, Inc., (202) 857–3800. Oppositions to these petitions must be filed October 13, 1998. See Section 1.4(b)(1) of the Commission's rule (47 CFR 1.4(b)(1)). Replies to an opposition must be filed within 10 days after the time for filing oppositions has expired.

Subject: FCC Public Notice, Division Announces Release of Revised Universal Service Worksheet, FCC Form 457 (CC Docket Nos. 97–21, 96–45).

Number of Petitions Filed: 2.

Subject: Federal-State Joint Board on Universal Service (CC Docket No. 96–45).

Number of Petitions Filed: 2.

Federal Communications Commission.

Magalie Roman Salas,

Secretary.

[FR Doc. 98–25820 Filed 9–25–98; 8:45 am]

BILLING CODE 6712–01–M

FEDERAL MARITIME COMMISSION

Ocean Freight Forwarder License Revocations

The Federal Maritime Commission hereby gives notice that the following freight forwarder licenses have been revoked pursuant to section 19 of the Shipping Act of 1984 (46 U.S.C. app. 1718) and the regulations of the Commission pertaining to the licensing of ocean freight forwarders, effective on the corresponding revocation dates shown below:

License Number: 3257.
Name: Acemetrans Worldwide Cargo Services, Inc.
Address: 9270 N.W. 100th Street, Medley, FL 33178.
Date Revoked: July 9, 1998.
Reason: Failed to maintain a valid surety bond.

License Number: 102.
Name: Albury & Company.
Address: 899 South America Way, P.O. Box 014221, Miami, FL 33101.
Date Revoked: August 1, 1998.
Reason: Failed to maintain a valid surety bond.

License Number: 3747.
Name: Americargo International Forwarders, Inc.
Address: 8012 N.W. 29th Street, Miami, FL 33122–1077.
Date Revoked: April 29, 1998.
Reason: Failed to maintain a valid surety bond.

License Number: 3740.
Name: Asian Pacific Express, Inc.

Address: 4428 Rockhold Avenue, Rosemead, CA 91754.
Date Revoked: June 25, 1998.
Reason: Failed to maintain a valid surety bond.

License Number: 3997.
Name: Chien C. Tang d/b/a TL International.
Address: 824 West Commonwealth Avenue, Alhambra, CA 91801.
Date Revoked: June 14, 1998.
Reason: Failed to maintain a valid surety bond.

License Number: 3349.
Name: Compass Marine Services (U.S.A.) Inc. d/b/a Compass Marine (USA).
Address: 9202 S.W. Harbor Drive, Vashon, WA 98070.
Date Revoked: June 10, 1998.
Reason: Failed to maintain a valid surety bond.

License Number: 1005.
Name: Crystal Shipping Co., Inc.
Address: 47–30 29th Street, Long Island City, NY 11101.
Date Revoked: June 30, 1998.
Reason: Surrendered license voluntarily.

License Number: 3127.
Name: Express Packing and Forwarding, Inc.
Address: 2075 West Raymond Street, Indianapolis, IN 46221.
Date Revoked: June 22, 1998.
Reason: Failed to maintain a valid surety bond.

License Number: 3746.
Name: Far International Corp. of America d/b/a F.I.C.A.
Address: 8278 N.W. 66th Street, Miami, FL 33166.
Date Revoked: June 22, 1998.
Reason: Surrendered license voluntarily.

License Number: 1658.
Name: Harvey E. Ripple d/b/a H.E. Ripple & Co.
Address: 9125 Airport Blvd., Suite B2, Houston, TX 77061.
Date Revoked: August 19, 1998.
Reason: Failed to maintain a valid surety bond.

License Number: 4170.
Name: K-Pasa, Inc. d/b/a Clarandon Freight Forwarders.
Address: 1900 Corporate Blvd., Suite 305W, Boca Raton, FL 33431.
Date Revoked: August 1, 1998.
Reason: Failed to maintain a valid surety bond.

License Number: 2454.
Name: Meston and Brings, Inc. and Onan Shipping Ltd., a Division of Meston and Brings, Inc.
Address: 1000 Second Avenue, Suite 3350, Seattle, WA 98104–1046.
Date Revoked: June 26, 1998.
Reason: Failed to maintain a valid surety bond.

License Number: 3496.
Name: PEXCON, INC.
Address: 2214 Torrance Blvd., Suite 102, Torrance, CA 90501.
Date Revoked: June 12, 1998.
Reason: Surrendered license voluntarily.

License Number: 3995.
Name: Pro Cargo Services, Corp.
Address: 8284 NW 66 Street, Miami, FL 33166.
Date Revoked: July 19, 1998.
Reason: Failed to maintain a valid surety bond.

License Number: 3411.
Name: Ram-Forwarding, Inc.
Address: 16538 Air Center Blvd., Houston, TX 77032.
Date Revoked: June 26, 1998.
Reason: Surrendered license voluntarily.

License Number: 1276.
Name: Rogelio G. Gonzalez d/b/a Gonzalez International Services.
Address: 1314 Texas Avenue, Suite 1010, Houston, TX 77002.
Date Revoked: August 23, 1998.
Reason: Failed to maintain a valid surety bond.

License Number: 4050.
Name: Seacrest Associates, Inc. d/b/a Seacrest Container Line.
Address: 5550 Merrick Road, Suite 304, Massapequa, NY 11758.
Date Revoked: June 15, 1998.
Reason: Failed to maintain a valid surety bond.

License Number: 3543.
Name: United States Auto & Cargo Exporters Corp.
Address: 2800 N.W. 55 Court, Ft. Lauderdale, FL 33309.
Date Revoked: August 15, 1998.
Reason: Failed to maintain a valid surety bond.

License Number: 3804.
Name: Van Esch Trading and Shipping B.V.
Address: 3070 McKaughan Blvd., Houston, TX 77032.
Date Revoked: July 2, 1998.
Reason: Failed to maintain a valid surety bond.

License Number: 3755.
Name: Vantage International Shipping, Inc.
Address: 950 Eller Drive, P.O. Box 165106, Ft. Lauderdale, FL 33316.
Date Revoked: August 10, 1998.
Reason: Failed to maintain a valid surety bond.

License Number: 4320.
Name: World Trade Forwarding Group Corporation.
Address: 9600 N.W. 25th Street, Suite 2–B, Miami, FL 33172.
Date Revoked: August 22, 1998.
Reason: Failed to maintain a valid surety bond.

Bryant L. VanBrakle,
Director, Bureau of Tariffs, Certification and Licensing.

[FR Doc. 98–25812 Filed 9–25–98; 8:45 am]

BILLING CODE 6730–01–M

FEDERAL MARITIME COMMISSION

Ocean Freight Forwarder License Rescission of Orders of Revocation

Notice is hereby given that the Orders revoking the licenses of Josephine D. Mina-Saito, Marino Transportation Services Inc., and Thomas Hudson Enterprises, Inc. are being rescinded by the Federal Maritime Commission pursuant to sections 14 and 19 of the Shipping Act of 1984 (46 U.S.C. app. 1718) and the regulations of the Commission pertaining to the licensing of ocean freight forwarders, 46 CFR Part 510.

License No.	Name/address
3892	Josephine D. Mina-Saito, 29360 North Begonias Lane, Canyon Country, CA 91351.
3819	Marino Transportation Services, Inc., 2199 Eisenhower, Blvd., P.O. Box 350156, Fort Lauderdale, FL 33335–0156.
2785	Thomas Hudson Enterprises, Inc., 10050 Talley Lane, Houston, TX 77041.

Bryant L. VanBrakle,
Director, Bureau of Tariffs, Certification and Licensing.

[FR Doc. 98–25813 Filed 9–25–98; 8:45 am]

BILLING CODE 6730–01–M

FEDERAL RESERVE SYSTEM

Change in Bank Control Notices; Acquisitions of Shares of Banks or Bank Holding Companies

The notificants listed below have applied under the Change in Bank Control Act (12 U.S.C. 1817(j)) and § 225.41 of the Board's Regulation Y (12 CFR 225.41) to acquire a bank or bank holding company. The factors that are considered in acting on the notices are set forth in paragraph 7 of the Act (12 U.S.C. 1817(j)(7)).

The notices are available for immediate inspection at the Federal Reserve Bank indicated. The notices also will be available for inspection at the offices of the Board of Governors.

Interested persons may express their views in writing to the Reserve Bank indicated for that notice or to the offices of the Board of Governors. Comments must be received not later than October 12, 1998.

A. Federal Reserve Bank of San Francisco (Maria Villanueva, Manager of Analytical Support, Consumer Regulation Group) 101 Market Street, San Francisco, California 94105-1579:

1. Mark William Packard, and Matt Calvin Packard, both of Springville, Utah; to each retain voting shares of The F. Calvin Packard Family Limited Partnership, Springville, Utah, and thereby indirectly acquire Central Bancorporation, Provo, Utah, and Central Bank, Provo, Utah.

Board of Governors of the Federal Reserve System, September 22, 1998.

Robert deV. Frierson,

Associate Secretary of the Board.

[FR Doc. 98–25829 Filed 9–25–98; 8:45 am]

BILLING CODE 6210–01–F

FEDERAL RESERVE SYSTEM

Formations of, Acquisitions by, and Mergers of Bank Holding Companies

The companies listed in this notice have applied to the Board for approval, pursuant to the Bank Holding Company Act of 1956 (12 U.S.C. 1841 *et seq.*) (BHC Act), Regulation Y (12 CFR Part 225), and all other applicable statutes and regulations to become a bank holding company and/or to acquire the assets or the ownership of, control of, or the power to vote shares of a bank or bank holding company and all of the banks and nonbanking companies owned by the bank holding company, including the companies listed below.

The applications listed below, as well as other related filings required by the Board, are available for immediate inspection at the Federal Reserve Bank indicated. The application also will be available for inspection at the offices of the Board of Governors. Interested persons may express their views in writing on the standards enumerated in the BHC Act (12 U.S.C. 1842(c)). If the proposal also involves the acquisition of a nonbanking company, the review also includes whether the acquisition of the nonbanking company complies with the standards in section 4 of the BHC Act. Unless otherwise noted, nonbanking activities will be conducted throughout the United States.

Unless otherwise noted, comments regarding each of these applications must be received at the Reserve Bank indicated or the offices of the Board of Governors not later than October 22, 1998.

A. Federal Reserve Bank of New York (Betsy Buttrill White, Senior Vice President) 33 Liberty Street, New York, New York 10045-0001:

1. Ridgewood Financial, MHC and Ridgewood Financial, Inc, both of Ridgewood, New Jersey; to become bank holding companies by acquiring 53 percent of Ridgewood Savings Bank of New Jersey, Ridgewood, New Jersey.

B. Federal Reserve Bank of Atlanta (Lois Berthaume, Vice President) 104 Marietta Street, N.W., Atlanta, Georgia 30303-2713:

1. Synovus Financial Corp., Columbus, Georgia; to acquire 100 percent of the voting shares of Georgia Bank & Trust Company, Calhoun, Georgia.

Board of Governors of the Federal Reserve System, September 22, 1998.

Robert deV. Frierson,

Associate Secretary of the Board.

[FR Doc. 98–25830 Filed 9–25–98; 8:45 am]

BILLING CODE 6210–01–F

FEDERAL RESERVE SYSTEM

Notice of Proposals to Engage in Permissible Nonbanking Activities or to Acquire Companies that are Engaged in Permissible Nonbanking Activities

The companies listed in this notice have given notice under section 4 of the Bank Holding Company Act (12 U.S.C. 1843) (BHC Act) and Regulation Y, (12 CFR Part 225) to engage *de novo*, or to acquire or control voting securities or assets of a company, including the companies listed below, that engages either directly or through a subsidiary or other company, in a nonbanking activity that is listed in § 225.28 of Regulation Y (12 CFR 225.28) or that the Board has determined by Order to be closely related to banking and permissible for bank holding companies. Unless otherwise noted, these activities will be conducted throughout the United States.

Each notice is available for inspection at the Federal Reserve Bank indicated. The notice also will be available for inspection at the offices of the Board of Governors. Interested persons may express their views in writing on the question whether the proposal complies with the standards of section 4 of the BHC Act.

Unless otherwise noted, comments regarding the applications must be received at the Reserve Bank indicated or the offices of the Board of Governors not later than October 12, 1998.

A. Federal Reserve Bank of New York (Betsy Buttrill White, Senior Vice President) 33 Liberty Street, New York, New York 10045-0001:

1. United Overseas Bank, Limited (UOB), Singapore; to engage *de novo* through its subsidiary, UOB Global Capital LLC, New York, New York (a to-be-formed 70 percent owned subsidiary of UOB), in acting in agency or custodial capacity for customers, pursuant to § 225.28(b)(5) of Regulation Y; and providing financial and investment advisory and management services to individuals and corporations, generally on a discretionary basis, pursuant to § 225.28(b)(6) of Regulation Y.

2. Dresdner Bank AG, Frankfurt, Germany; to acquire, through its wholly owned subsidiary Dresdner RCM Global Investors LLC, San Francisco, California, all of the voting shares of Caywood-Scholl Capital Management, San Diego, California, and thereby to engage in the following nonbanking activities: (1) financial and investment advisory activities, pursuant to § 225.28(b)(6); (2) investment transactions as principal, pursuant to § 225.28(b)(8); and (3) acting as general partner for private limited partnerships that invest in securities and assets in which a bank holding company is permitted to invest. *See, e.g., Dresdner Bank AG*, 84 Fed. Res. Bull. 361 (1998).

B. Federal Reserve Bank of Richmond (A. Linwood Gill III, Assistant Vice President) 701 East Byrd Street, Richmond, Virginia 23261-4528:

1. BB&T Corporation, Winston-Salem, North Carolina; to acquire Scott & Stringfellow Financial, Inc., Richmond, Virginia, and thereby engage in providing investment and financial advisory services, pursuant to § 225.28(b)(6) of Regulation Y; providing credit and credit related services, pursuant to §§ 225.28(b)(1) and (2) of Regulation Y; leasing personal or real property or acting as agent, broker or adviser in leasing such property, pursuant to § 225.28(b)(3) of Regulation Y; providing investment and financial advisory services, pursuant to § 225.28(b)(6) of Regulation Y; providing brokerage services and investment advisory services, both separately and on a combined basis in connection with the purchase and sale of securities and related credit, custodial and other incidental services, pursuant to § 225.28(b)(7)(i) of Regulation Y; buying and selling all types of securities on a ''riskless principal'' basis, pursuant to § 225.28(b)(7)(ii) of Regulation Y; acting as agent in the private placement of all types of securities, pursuant to § 225.28(b)(7)(iii) of Regulation Y; underwriting and dealing in obligations

of the United States, general obligations of states and their political subdivisions and other obligations, instruments and securities that a member bank of the Federal Reserve System may underwrite or deal in, pursuant to § 225.28(b)(8)(i) of Regulation Y; engaging as principal in investing and trading activities, pursuant to § 225.28(b)(8)(ii) of Regulation Y; providing employee benefits consulting services, pursuant to § 225.28(b)(9)(ii) of Regulation Y; underwriting and dealing in all types of debt, equity and other securities other than ownership interests in open-end investment companies that a member bank may not underwrite or deal in (*See, J.P. Morgan & Co., Inc., The Chase Manhattan Corp., Bankers Trust New York Corp., Citicorp, and Security Pacific Corp.*, 75 Fed. Res. Bull. 192 (1989)); and providing cash management services (*See, Societe General*, 84 Fed. Res. Bull. 680 (1998)).

In connection with the proposed transaction, BB&T Corporation also has applied to acquire an option to purchase up to 19.9 percent of the common stock of the target.

C. Federal Reserve Bank of St. Louis (Randall C. Sumner, Vice President) 411 Locust Street, St. Louis, Missouri 63102-2034:

1. New London Bancshares, Inc., and Ralls County State Bank, both of New London, Missouri; to continue to engage in the sale of casualty and life insurance sales in a community with a population not exceeding 5,000, pursuant to § 225.28(11)(iii) of Regulation Y.

Board of Governors of the Federal Reserve System, September 22, 1998.

Robert deV. Frierson,

Associate Secretary of the Board.

[FR Doc. 98–25828 Filed 9–25–98; 8:45 am]

BILLING CODE 6210–01–F

FEDERAL RESERVE SYSTEM

Sunshine Act Meeting

AGENCY HOLDING THE MEETING: Board of Governors of the Federal Reserve System.

TIME AND DATE: 10:00 a.m., Thursday, October 1, 1998.

PLACE: Marriner S. Eccles Federal Reserve Board Building, C Street entrance between 20th and 2lst Streets, N.W., Washington, D.C. 20551.

STATUS: Open.

MATTERS TO BE CONSIDERED:

Summary Agenda: Because of its routine nature, no discussion of the following item is anticipated. This matter will be voted on without discussion unless a member of the Board requests that the item be moved to the discussion agenda.

1. Publication for comment of proposed amendments to Regulation H (Membership of State Banking Institutions in the Federal Reserve System), Regulation K (International Banking Operations), and Regulation Y (Bank Holding Companies and Change in Bank Control) to require domestic and foreign banking organizations to develop and maintain ''Know Your Customer'' programs.

2. Any items carried forward from a previously announced meeting.

Discussion Agenda: None. No Discussion Items Are Scheduled For This Meeting.

Note: If an item is moved from the Summary Agenda to the Discussion Agenda, discussion of the item will be recorded. Cassettes will then be available for listening in the Board's Freedom of Information Office, and copies can be ordered for $6 per cassette by calling 202–452–3684 or by writing to: Freedom of Information Office, Board of Governors of the Federal Reserve System, Washington, D.C. 20551.

CONTACT PERSON FOR MORE INFORMATION: Lynn S. Fox, Assistant to the Board; 202–452–3204.

SUPPLEMENTARY INFORMATION: You may call 202–452–3206 for a recorded announcement of this meeting; or you may contact the Board's Web site at http://www.federalreserve.gov for an electronic announcement. (The Web site also includes procedural and other information about the open meeting.)

Dated: September 24, 1998.

Robert deV. Frierson,

Associate Secretary of the Board.

[FR Doc. 98–25960 Filed 9–24–98; 11:19 am]

BILLING CODE 6210–01–P

FEDERAL RESERVE SYSTEM

Sunshine Act Meeting

AGENCY HOLDING THE MEETING: Board of Governors of the Federal Reserve System.

TIME AND DATE: Approximately 10:15 a.m., Thursday, October 1, 1998, following a recess at the conclusion of the open meeting.

PLACE: Marriner S. Eccles Federal Reserve Board Building, 20th and C Streets, N.W., Washington, D.C. 20551.

STATUS: Closed.

MATTERS TO BE CONSIDERED:

1. Personnel actions (appointments, promotions, assignments, reassignments, and salary actions) involving individual Federal Reserve System employees.

2. Any matters carried forward from a previously announced meeting.

CONTACT PERSON FOR MORE INFORMATION: Lynn S. Fox, Assistant to the Board; 202–452–3204.

SUPPLEMENTARY INFORMATION: You may call 202–452–3206 beginning at approximately 5 p.m. two business days before the meeting for a recorded announcement of bank and bank holding company applications scheduled for the meeting; or you may contact the Board's Web site at http://www.federalreserve.gov for an electronic announcement that not only lists applications, but also indicates procedural and other information about the meeting.

Dated: September 24, 1998.

Robert deV. Frierson,

Associate Secretary of the Board.

[FR Doc. 98–25961 Filed 9–24–98; 11:19 am]

BILLING CODE 6210–01–P

FEDERAL TRADE COMMISSION

[File No. 972–3136]

Care Technologies, Inc.; Analysis To Aid Public Comment

AGENCY: Federal Trade Commission.

ACTION: Proposed consent agreement.

SUMMARY: The consent agreement in this matter settles alleged violations of federal law prohibiting unfair or deceptive acts or practices or unfair methods of competition. The attached Analysis to Aid Public Comment describes both the allegations in the draft complaint that accompanies the consent agreement and the terms of the consent order—embodied in the consent agreement—that would settle these allegations.

DATES: Comments must be received on or before November 27, 1998.

ADDRESSES: Comments should be directed to: FTC/Office of the Secretary, Room 159, 6th St. and Pa. Ave., NW., Washington, DC 20580.

FOR FURTHER INFORMATION CONTACT: Linda Badger or Kerry O'Brien, San Francisco Regional Office, Federal Trade Commission, 901 Market St., Suite 570, San Francisco, CA 94103. (415) 356–5270.

SUPPLEMENTARY INFORMATION: Pursuant to Section 6(f) of the Federal Trade Commission Act, 38 Stat. 721, 15 U.S.C. 46 and Section 2.34 of the Commission's Rules of Practice (16 CFR 2.34), notice is hereby given that the above-captioned consent agreement containing a consent order to cease and desist, having been filed with and accepted, subject to final approval, by the Commission, has been placed on the public record for a period

of sixty (60) days. The following Analysis to Aid Public Comment describes the terms of the consent agreement, and the allegations in the complaint. An electronic copy of the full text of the consent agreement package can be obtained from the FTC Home Page (for September 18, 1998), on the World Wide Web, at ''http://www.ftc.gov/os/actions97.htm.'' A paper copy can be obtained from the FTC Public Reference Room, Room H–130, Sixth Street and Pennsylvania Avenue, NW., Washington, DC 20580, either in person or by calling (202) 326–3627. Public comment is invited. Such comments or views will be considered by the Commission and will be available for inspection and copying at its principal office in accordance with Section 4.9(b)(6)(ii) of the Commission's Rules of Practice (16 CFR 4.9(b)(6)(ii)).

Analysis of Proposed Consent Order To Aid Public Comment

The Federal Trade Commission has accepted an agreement, subject to final approval, to a proposed consent order from respondent Care Technologies, Inc.

The proposed consent order has been placed on the public record for sixty (60) days for reception of comments by interested persons. Comments received during this period will become part of the public record. After sixty (60) days, the Commission will again review the agreement and the comments received and will decide whether it should withdraw from the agreement or make final the agreement's proposed order.

Care Technologies, Inc. (''Care'') markets two products for the treatment of head lice infestations: ''Clear Lice Egg Remover'' and ''Clear Lice Killing Shampoo.'' The Commission's complaint alleges that Care's advertising for these products included false and unsubstantiated claims that: (1) Clear Lice Egg Remover loosens or unglues lice eggs from the hair; (2) Clear Lice Killing Shampoo kills one hundred percent of lice eggs; and (3) laboratory and field testing proves that Clear Lice Egg Remover loosens or unglues lice eggs from the hair.

The complaint alleges that Clear Lice Egg Remover does not loosen or unglue lice eggs from the hair. Additionally, the complaint explains that Clear Lice Killing Shampoo is based on a pesticide which is not one hundred percent effective against lice eggs. Consumers should be aware of this limitation and make every effort to physically remove lice eggs. In addition, when this type of pediculicide is used, consumers are instructed to apply a second treatment in seven to ten days to kill any newly hatched lice.

The proposed consent order contains provisions designed to remedy the violations charged and to prevent the respondent from engaging in similar acts and practices in the future. Part I of the proposed order would prohibit the company from representing that Clear Lice Egg Remover, or any substantially similar product, loosens, unglues, or otherwise detaches lice eggs from the hair, unless the representation is true and, at the time it is made, respondent possesses and relies upon competent and reliable scientific evidence that substantiates the representation.

Part II of the proposed order would prohibit the company from representing that Clear Lice Killing Shampoo, or any substantially similar product, kills one hundred percent of lice eggs, unless the representation is true and, at the time it is made, respondent possesses and relies upon competent and reliable scientific evidence that substantiates the representation.

Parts III and IV of the order require that, for a period of two years, the company make disclosures in its advertisement anytime it makes claims regarding the efficacy of Clear Lice Killing Shampoo or any substantially similar product. Pursuant to Part III, the following disclosure will be required in print ads and promotional materials: ''Reapplication and egg removal are required to ensure complete effectiveness. See label for important information.'' Part IV requires the disclosure, ''Two Treatments Required,'' be made in ads communicated through an electronic medium, such as television. When the ad makes any claims regarding directions for use of the product, this disclosure must be in the audio as well as the video portion of the advertisement.

Part V of the proposed order requires the company to have scientific support prior to making any claims regarding the efficacy of any drug or device for the treatment of lice in humans, or any pesticide for treatment of lice. Part VI of the order of the proposed order prohibits Care from misrepresenting the existence, contents, validity, results, conclusions, or interpretations of any test study or research, for any drug or device for the treatment of lice in humans, or any pesticide for treatment of lice. Because this matter involves drug regulated by the FDA, Part VII of the order includes a safe harbor allowing the respondent to make any claim permitted under a new drug application, or under a tentative final or final standard promulgated by the agency.

The proposed order also requires the respondent to maintain materials relied upon to substantiate claims covered by the order to provide copies of the order to certain personnel of the respondent; to notify the Commission of any changes in corporate structure that might affect compliance with the order; and to file one or more reports detailing compliance with the order.

The purpose of this analysis is to facilitate public comment on the proposed order. It is not intended to constitute an official interpretation of the agreement and proposed order or to modify in any way their terms.

By direction of the Commission.

Donald S. Clark,

Secretary.

[FR Doc. 98–25844 Filed 9–25–98; 8:45 am]

BILLING CODE 6750–01–M

FEDERAL TRADE COMMISSION

[File No. 972–3084]

Del Pharmaceuticals, Inc., et al.; Analysis To Aid Public Comment

AGENCY: Federal Trade Commission.

ACTION: Proposed consent agreement.

SUMMARY: The consent agreement in this matter settles alleged violations of federal law prohibiting unfair or deceptive acts or practices or unfair methods of competition. The attached Analysis to Aid Public Comment describes both the allegation in the draft complaint that accompanies the consent agreement and the terms of the consent order—embodied in the consent agreement—that would settle these allegations.

DATES: Comments must be received on or before November 27, 1998.

ADDRESSES: Comments should be directed to: FCC/Office of the Secretary, Room 159, 6th St. and Pa. Ave., NW., Washington, DC 20580.

FOR FURTHER INFORMATION CONTACT: Linda Badger or Kerry O'Brien, San Francisco Regional Office, Federal Trade Commission, 901 Market St., Suite 570, San Francisco, CA 94103. (415) 356–5270.

SUPPLEMENTARY INFORMATION: Pursuant to Section 6(f) of the Federal Trade Commission Act, 38 Stat. 721, 15 U.S.C. 46 and Section 2.34 of the Commission's Rules of Practice (16 CFR 2.34), notice hereby given that the above-captioned consent agreement containing a consent order to cease and desist, having been filed with and accepted, subject to final approval, by the Commission, has been placed on the public record for a period of sixty (60) days. The following Analysis to Aid Public Comment

describes the terms of the consent agreement, and the allegations in the compliant. An electronic copy of the full text of the consent agreement package can be obtained from the FTC Home Page (for September 18, 1998), on the World Wide Web, at ''http://www.ftcgov/os/actions97.htm.'' A paper copy can be obtained from the FTC Public Reference Room, Room H–130, Sixth Street and Pennsylvania Avenue, NW, Washington, DC 20580, either in person or by calling (202) 326–3627. Public comment is invited. Such comments or views will be considered by the Commission and will available for inspection and copying at its principal office in accordance with Section 4.9(b)(6)(ii) of the Commission's Rules of Practice (16 CFR 4.9(b)(6)(ii)).

Analysis of Proposed Consent Order To Aid Public Comment

The Federal Trade Commission has accepted an agreement, subject to final approval, to a proposed consent order from respondents Del Pharmaceuticals, Inc. and its parent, Del Laboratories, Inc., Delaware corporations.

The proposed consent order has been placed on the public record for sixty (60) days for reception of comments by interested persons. Comments received during this period will become part of the public record. After sixty (60) days, the Commission will again review the agreement and the comments received and will decide whether it should withdraw from the agreement or make final the agreement's proposed order.

Del Pharmaceuticals, Inc. (''Del'') markets a variety of over-the-counter pharmaceuticals. The Commission's complaint challenges claims made for two of Del's products: ''Pronto Lice Treatment'' and ''Baby Orajel Tooth & Gum Cleanser.'' Pronto is a shampoo (or ''pediculicide'') sold to treat people who suffer from head lice infestations. The Commission's complaint charges that Del's advertising for Pronto included false and unsubstantiated claims of efficacy in curing head lice infestations. Specifically, the complaint alleges that Del made false and unsubstantiated claims that: (1) Pronto kills one hundred percent of lice eggs; (2) Pronto is one hundred percent effective in killing lice and their eggs in a single treatment; and (3) Pronto helps prevent reinfestation. The Complaint also alleges that the claim that laboratory tests prove that Pronto is one hundred percent effective in killing lice and their eggs is false.

In fact, the complaint alleges that Pronto is based on a pesticide which is not one hundred percent effective against lice eggs. Consumers should be aware of this limitation and make every effort to physically remove lice eggs. In addition, when this type of pediculicide is used, consumers are instructed to apply a second treatment in seven to ten days to kill any newly hatched lice. Consumers also should also be aware that this type of pediculicide does not leave a lasting pesticidal residue that would help prevent reinfestation from post-treatment contacts with other lice-infested people or things.

The complaint also challenges ''pediatrician recommended'' claims made for Baby Orajel Tooth & Gum Cleanser. Del markets this product as a toothpaste for young children. According to the complaint, Del made false and unsubstantiated claims that: (1) competent and reliable surveys show that nine out of ten pediatricians would recommend Baby Orajel Tooth & Gum Cleanser; and (2) nine out of ten pediatricians recommend Baby Orajel Tooth & Gum Cleanser. The complaint alleges that the survey relied upon by the respondents was methodologically flawed, and, that the greatest number of pediatricians who responded to the survey said that they were only ''somewhat likely'' to recommend Baby Orajel Tooth & Gum Cleanser. In addition, the survey merely asked pediatricians how likely they would be to recommend such a product, and not whether they actually do recommend Baby Orajel Tooth & Gum Cleanser.

The proposed consent order contains provisions designed to remedy the violations charged and to prevent the respondents from engaging in similar acts and practices in the future. Part I of the proposed order would prohibit Del from making certain efficacy claims about Pronto, or any substantially similar product, unless at the time of making the claims, they are true and substantiated by competent and reliable scientific evidence. The specific claims covered by Part I include any representation that: (1) such product kills one hundred percent of lice eggs; (2) such product is one hundred percent effective in killing lice and their eggs in a single treatment; or (3) such product prevents reinfestation.

Parts II and III of the proposed order require that, for a period of two years, the respondents make disclosures in its disclosures in its advertisements anytime they make claims regarding the efficacy of Pronto or any substantially similar product. Pursuant to Part II, the following disclosure will be required in print ads and promotional materials: ''Reapplication and egg removal are required to ensure complete effectiveness. See label for important information.'' Part III requires the disclosure, ''Two Treatments Required,'' be made in ads communicated through an electronic medium, such as television. When the ad makes any claims regarding directions for use of the product, this disclosure must be in the audio as well as the video portion of the advertisement.

Part IV of the proposed order addresses claims made for Baby Orajel Tooth & Gum Cleanser. Under this provision, respondents are prohibited from making claims for this product or any other topically applied oral cleansing product about: (1) the extent to which doctors or other health, childcare, or medical professionals recommend or would recommend such product; or (2) the recommendation, approval, or endorsement of such product by any health, childcare, or medical professional, profession, group or other entity, unless, at the time the representation is made, respondents posses and rely upon competent and reliable evidence, which when appropriate must be competent and reliable scientific evidence, that substantiates the representation.

Part V of the proposed order prohibits Del from misrepresenting the existence, contents validity, results, conclusions, or interpretations of any test, study, or research, for any drug or device for the treatment of lice in humans, or any pesticide for treatment of lice, or any topically applied oral cleansing product. Part VI of the proposed order requires the respondents to have scientific support prior to making any claims regarding the efficacy of any drug or device for the treatment of lice in humans, or any pesticide for treatment of lice.

Part VII of the proposed order includes an inventory provision that allows the respondents to sell Pronto boxes with the labeling unchanged for approximately forty days after this order becomes final. Because this matter involves a drug regulated by the FDA, Part VIII of the order includes a safe harbor allowing the respondent to make any claim permitted under a new drug application, or under a tentative final or final standard promulgated by that agency.

The proposed order also requires the respondents to maintain materials relied upon to substantiate claims covered by the order; to provide copies of the order to certain personnel of the respondent; to notify the Commission of any changes in corporate structure that might affect compliance with the order; and to file one or more reports detailing compliance with the order.

The purpose of this analysis is to facilitate public comment on the proposed order. It is not intended to

constitute an official interpretation of the agreement and proposed order or to modify in any way their terms.

By direction of the Commission.

Donald S. Clark,

Secretary.

[FR Doc. 98–25845 Filed 9–25–98; 8:45 am]

BILLING CODE 6750–01–M

FEDERAL TRADE COMMISSION

[File No. 972–3159]

Pfizer Inc.; Analysis To Aid Public Comment

AGENCY: Federal Trade Commission.

ACTION: Proposed consent agreement.

SUMMARY: The consent agreement in this matter settles alleged violations of federal law prohibiting unfair or deceptive acts or practices or unfair methods of competition. The attached Analysis to Aid Public Comment describes both the allegations in the draft complaint that accompanies the consent agreement and the terms of the consent order—embodied in the consent agreement—that would settle these allegations.

DATES: Comments must be received on or before November 27, 1998.

ADDRESSES: Comments should be directed to: FTC/Office of the Secretary, Room 159, 6th St. and Pa. Ave., NW., Washington, DC 20580.

FOR FURTHER INFORMATION CONTACT: Linda Badger or Kerry O'Brien, San Francisco Regional Office, Federal Trade Commission, 901 Market St., Suite 570, San Francisco, CA 94103. (415) 356–5270.

SUPPLEMENTARY INFORMATION: Pursuant to Section 6(f) of the Federal Trade Commission Act, 38 Stat. 721, 15 U.S.C. 46 and Section 2.34 of the Commission's Rules of Practice (16 CFR 2.34), notice is hereby given that the above-captioned consent agreement containing a consent order to cease and desist, having been filed with and accepted, subject to final approval, by the Commission, has been placed on the public record for a period of sixty (60) days. The following Analysis to Aid Public Comment describes the terms of the consent agreement, and the allegations in the complaint. An electronic copy of the full text of the consent agreement package can be obtained from the FTC Home Page (for September 18, 1998), on the World Wide Web, at ''http://www.ftc.gov/os/actions97.htm.'' A paper copy can be obtained from the FTC Public Reference Room, Room H–130, Sixth Street and Pennsylvania Avenue, NW., Washington, DC 20580, either in person or by calling (202) 326–3627. Public comment is invited. Such comments or views will be considered by the Commission and will be available for inspection and copying at its principal office in accordance with Section 4.9(b)(6)(ii) of the Commission's Rules of Practice (16 CFR 4.9(b)(6)(ii)).

Analysis of Proposed Consent Order To Aid Public Comment

The Federal Trade Commission has accepted an agreement, subject to final approval, to a proposed consent order from respondent Pfizer Inc.

The proposed consent order has been placed on the public record for sixty (60) days for reception of comments by interested persons. Comments received during this period will become part of the public record. After sixty (60) days, the Commission will again review the agreement and the comments received and will decide whether it should withdraw from the agreement or make final the agreement's proposed order.

Pfizer Inc. (''Pfizer'') markets a variety of over-the-counter pharmaceuticals, including ''RID Lice Killing Shampoo.'' RID is a shampoo (or ''pediculicide'') sold to treat people who suffer from head lice infestations. The RID package includes a comb for use in removing lice eggs. The Commission's complaint alleges the Pfizer's advertising for RID included false and unsubstantiated claims that: (1) RID Lice Killing Shampoo cures lice infestations in a single treatment; (2) the RID egg removal comb is one hundred percent effective; (3) clinical studies prove that RID Lice Killing Shampoo cures lice infections in a single treatment; and (4) clinical studies prove that the RID egg removal comb is one hundred percent effective.

In fact, the complaint alleges that RID is based on a pesticide which is not one hundred percent effective against lice eggs. Consumers should be aware of this limitation and make every effort to physically remove lice eggs. In addition, when this type of pediculicide is used, consumers are instructed to apply a second treatment in seven to ten days to kill any newly hatched lice. In addition, the complaint explains that the RID comb, included with the shampoo, is not necessarily one hundred percent effective. Lice eggs are difficult to see and to remove. The effectiveness of the comb is largely dependent on the skill and tenacity of the comber.

The complaint further explains why clinical studies do not prove that RID cures lice infestations in a single treatment. Specifically, the complaint alleges that the study Pfizer relied upon to make this claim included the application of a single treatment, along with a thorough combing that removed all lice eggs. Moreover, the studies relied upon the claim that the RID egg removal comb is one hundred percent effective employed individuals trained in egg removal to comb patients' hair. According to the complaint, there is no evidence that the same results are achievable by an average consumer.

The proposed consent order contains provisions designed to remedy the violations charged and to prevent the respondent from engaging in similar acts and practices in the future. Part I of the proposed order would prohibit the company from representing that RID Lice Killing Shampoo or any substantially similar product cures a lice infestation in a single application, unless the representation is true and, at the time it is made, respondent possesses and relies upon competent and reliable scientific evidence that substantiates the representation.

Parts II and III of the order require that, for a period of two years, the company make disclosures in its advertisements anytime it makes claims regarding the efficacy of RID or any substantially similar product. Pursuant to Part II, the following disclosure will be required in print ads and promotional materials: ''Reapplication and egg removal are required to ensure complete effectiveness. See label for important information.'' Part III requires the disclosure, ''Two Treatments Required,'' be made in ads communicated through an electronic medium, such as television. When the ad makes any claims regarding directions for use of the product, this disclosure must be in the audio as well as the video portion of the advertisement.

Part IV of the proposed order prohibits Pfizer from misrepresenting the existence, contents, validity, results, conclusions, or interpretations of any test, study, or research, for any drug or device for the treatment of lice in humans, or any pesticide for treatment of lice. Part V of the proposed order requires the company to have scientific support prior to making any claims regarding the efficacy of any drug or device for the treatment of lice in humans, or any pesticide for treatment of lice. Because this matter involves a drug regulated by the FDA, Part VI of the order includes a safe harbor allowing the respondent to make any claim permitted under a new drug application, or under a tentative final or final standard promulgated by that agency.

The proposed order also requires the respondent to maintain materials relied

upon to substantiate claims covered by the order; to provide copies of the order to certain personnel of the respondent; to notify the Commission of any changes in corporate structure that might affect compliance with the order.

The purpose of this analysis is to facilitate public comment on the proposed order. It is not intended to constitute an official interpretation of the agreement and proposed order or to modify in any way their terms.

By direction of the Commission.

Donald S. Clark,

Secretary.

Statement of Chairman Pitofsky and Commissioners Anthony and Thompson

In the Matters of, Care Technologies, Inc., File No. 972–3136, Del Pharmaceuticals, Inc., File No. 972–3084, Pfizer Inc., File No. 972–3159.

We write to express our view about the concerns Commissioner Swindle raises regarding the disclosure remedy in these cases. The orders require that, for two years, whenever a claim is made regarding the efficacy of the lice removal products, the respondents include a disclosure about the necessity for a second application of their product. Commissioner Swindle is concerned that this amounts to corrective advertising, and should not be imposed absent evidence that consumers hold lingering misbeliefs.

Unlike corrective advertising that is designed to correct misbeliefs caused by past advertising, the disclosure remedy in these cases in fencing-in relief, designed to prevent purchasers of respondents' products from being deceived by *future* advertising.[1] The triggered disclosure about the need for two treatments provides additional assurance that consumers will not be misled by future ads. We are satisfied that the triggered disclosures in these orders are appropriate and reasonably related to the alleged violations of Section 5.

Statement of Commissioner Orson Swindle

In the Matters of, Care Technologies, Inc., File No. 972–3136, Del Pharmaceuticals, Inc., File No. 972–3084, Pfizer Inc., File No. 972–3159.

I have voted to accept these consent agreements for public comment despite my reservations about the disclosure requirements. Advertising for these lice treatment products has contained false and misleading claims that the products can eradicate an infestation after a single use. In truth, reapplication and careful combing are required to complete the treatments. I have no doubt that the injunctive provisions are needed and appropriate to address these misrepresentations.

The settlements, however, go further. Under the terms of the consent orders, the respondents would be required for two years to state, in any advertising for lice treatments that makes an efficacy claim, that two applications of the treatment are necessary. The orders would mandate this disclosure in addition to prohibiting the challenged claims and requiring competent and reliable scientific evidence to substantiate any representation about the efficacy of the products.

The disclosures cannot be justified as necessary to correct a deception by omission. The orders prohibit the challenged claims and require substantiation for future claims. Any representation—either express or implied—that only one application will complete the treatment would violate the terms of this order. The disclosures are therefore not necessary to protect against false or misleading claims about the efficacy of a single treatment.

The proposed consent orders in effect require that the respondents include a corrective message in their advertising. We have no evidence that the respondents' marketing substantially created or reinforced a lingering misimpression about these products. *Warner-Lambert Co.* v. *FTC,* 562 F.2d 749 (D.C. Cir. 1977), cert. denied, 435 U.S. 950 (1978). The disclosure requirement cannot, therefore, be justified as corrective advertising.

Fencing-in relief in a consent order could arguably require that the respondent disseminate information to educate consumers. In these cases, however, I fear that we are using our fencing-in authority to justify what is actually corrective advertising. If we cannot meet the standard for imposing this relief as corrective advertising, let us not try to camouflage it as fencing-in.

I support the Commission's move toward stronger remedies. In this case, the injunctive provisions, together with the FDA-mandated labeling,[1] should ensure that consumers have truthful and accurate information before and after purchase. The disclosure requirement, however, is superfluous and the facts do not justify corrective advertising.

[FR Doc. 98–25846 Filed 9–25–98; 8:45 am]

BILLING CODE 8010–01–M

[1] It is also worth noting that the Commission has distinguished triggered disclosures such as those in these cases from corrective advertising, which is required regardless of the contents of the ad. Removatron Int'l Corp., 111 F.T.C. 206, 311–12 n. 28 (1988), aff'd, 884 F.2d 1489 (1st Cir. 1989). See also *American Home Prods. Corp.* v. *FTC,* 695 F.2d 681, 700 (3d Cir. 1982).

[1] The FDA requires the following statement on the label of any shampoo formulated to treat head lice:

Apply to affected area until all the hair is thoroughly wet with product. Allow product to remain on area for 10 minutes but no longer. Add sufficient warm water to form a lather and shampoo as usual. Rinse thoroughly. A fine-toothed comb or special lice/nit removing comb may be used to help remove dead lice or their eggs (nits) from hair. A second treatment must be done in 7 to 10 days to kill any newly hatched lice.

DEPARTMENT OF HEALTH AND HUMAN SERVICES

Administration for Children and Families

Reallotment of FY 1997 Funds for Low Income Home Energy Assistance Program (LIHEAP)

AGENCY: Office of Community Services, ACF, DHHS.

ACTION: Notice of final determination concerning funds available for reallotment.

SUMMARY: In accordance with section 2607(b)(1) of the Low Income Home Energy Assistance Act, title XXVI of the Omnibus Budget Reconciliation Act of 1981, as amended (42 U.S.C. 8621 et seq.), a notice was published in the **Federal Register** on August 6, 1998 announcing the Secretary's preliminary determination that $82,025 in FY 1997 Low Income Home Energy Assistance Program (LIHEAP) funds may be available for reallotment to other LIHEAP grantees and offering the State which is the source of funds a period for comments, which closed August 31, 1998. No comments were received.

Therefore, in accordance with the requirements of section 2607(a)(2)(C), $82,025 will be reallotted to most current LIHEAP grantees based upon the current allocation formula contained in section 2604 of the Act and under the terms of applicable State/Tribe agreements, except that HHS will not issue grants under $25 because the cost of issuing the grant for that amount is greater than the amount of the grant. These reallotted funds are being distributed by statutory formula to States, Indian Tribes and Tribal organizations, and insular areas that are currently grantees under the LIHEAP program for FY 1998. No other entities may apply for or receive the funds from HHS.

The reallotted funds must be treated by LIHEAP grantees receiving them as

an amount appropriated for FY 1998. As FY 1998 funds, they will be subject to all of the requirements of the Act, including section 2607(b)(2), which requires that a grantee must obligate 90 percent of its total block grant allocation for a fiscal year by the end of the fiscal year for which the funds are appropriated, that is, by September 30, 1998.

FOR FURTHER INFORMATION CONTACT: Janet Fox, Director, Division of Energy Assistance, Office of Community Services, 370 L'Enfant Promenade, SW, Washington, DC 20447; telephone (202) 401–9351.

Dated: September 18, 1998.

Donald Sykes,

Director, Office of Community Services.

[FR Doc. 98–25881 Filed 9–25–98; 8:45 am]

BILLING CODE 4184–01–M

DEPARTMENT OF HEALTH AND HUMAN SERVICES

Food and Drug Administration

Food Safety Risk Assessment Clearinghouse; Postponement of Open Technical Workshop

AGENCY: Food and Drug Administration, HHS.

ACTION: Notice.

SUMMARY: The Food and Drug Administration (FDA) and the Joint Institute for Food Safety and Applied Nutrition (JIFSAN) are announcing postponement of an open technical workshop on the formation of a Food Safety Risk Assessment Clearinghouse originally scheduled for October 5 and 6, 1998 (63 FR 40530, July 29, 1998). The workshop is being postponed due to scheduling conflicts as well as the need for further research to assure that the technical workshop will be effective at soliciting input into the clearinghouse framework document.

Date and Time: The technical workshop will be rescheduled for early 1999.

Registration: Notification of postponement and the new workshop date will be sent to all preregistered parties. To be automatically notified of the new workshop date, please contact Jacqueline M. Williams, Center for Food Safety and Applied Nutrition (HFS–315), Food and Drug Administration, 200 C St. SW., Washington, DC 20204, 202–205–4224, FAX 202–205–4422, or monitor on-line at ''http://www.life.umd.edu/jifsan/chouse.html''.

FOR FURTHER INFORMATION CONTACT: Valerie M. Davis (FDA) or Roberta Morales, VA–MD Regional College of Veterinary Medicine, University of Maryland, College Park, MD, 20742–3711, 301–935–6083, ext. 158, FAX 301–935–0149.

SUPPLEMENTARY INFORMATION: The May 1997 Report to the President on the National Food Safety Initiative described the need to establish a clearinghouse that would collect and catalogue available data and methodology pertinent to microbial risk-assessment offered by the private sector, trade associations, Federal and State agencies, and international sources. The goals of the clearinghouse would be to consolidate research data and methodology from public and proprietary sources, assist in coordinating research activities, identify gaps in needed research, and assist in the development of microbial risk assessment models.

An open meeting was held on August 7, 1998, which provided an overview of risk assessment, introduced the concept of a risk assessment clearinghouse, and identified and solicited the needs of potential users. Input of potential users from Federal and local government, academia, private industry, and consumer groups in attendance at the meeting are still being evaluated but several general observations are evident: (1) There is widespread interest and support for the clearinghouse among all groups; (2) it is critical to involve interested parties at every stage in the development of the clearinghouse; (3) educational efforts to explain the role of risk assessment in food safety decisionmaking should continue; and (4) the risk assessment clearinghouse must provide access to information in areas of risk management and food safety that would be useful to a broad cross section of users.

Summaries from focus group discussions and raw data collected from the participants in the August 7, 1998, open meeting entitled ''Risk Assessment Clearinghouse: Users and Needs'' will be posted on the World Wide Web (WWW) at ''http://www.life.umd.edu/jifsan/chouse.html''. Those accessing the website will be able to submit further input directly on the website. In addition, the draft clearinghouse framework document, intended to be the focal point of the upcoming technical workshop, will be posted on the WWW at ''http://www.life.umd.edu/jifsan/chouse.html''. Comments are encouraged and input will be accepted directly on the website. The new date and location of this workshop will be announced on the previously mentioned WWW address.

Dated: September 21, 1998.

William K. Hubbard,

Associate Commissioner for Policy Coordination.

[FR Doc. 98–25794 Filed 9–25–98; 8:45 am]

BILLING CODE 4160–01–F

DEPARTMENT OF HEALTH AND HUMAN SERVICES

Food and Drug Administration

Orthopaedic and Rehabilitation Devices Panel of the Medical Devices Advisory Committee; Notice of Meeting

AGENCY: Food and Drug Administration, HHS.

ACTION: Notice.

This notice announces a forthcoming meeting of a public advisory committee of the Food and Drug Administration (FDA). At least one portion of the meeting will be closed to the public.

Name of Committee: Orthopaedic and Rehabilitation Devices Panel of the Medical Devices Advisory Committee.

General Function of the Committee: To provide advice and recommendations to the agency on FDA's regulatory issues.

Date and Time: The meeting will be held on October 8, 1998, 9:30 a.m. to 6 p.m., and October 9, 1998, 8 a.m. to 5 p.m.

Location: Corporate Bldg., conference room 020B, 9200 Corporate Blvd., Rockville, MD.

Contact Person: Hany W. Demian, Center for Devices and Radiological Health (HFZ–410), Food and Drug Administration, 9200 Corporate Blvd., Rockville, MD 20850, 301–594–2036, or FDA Advisory Committee Information Line, 1–800–741–8138 (301–443–0572 in the Washington, DC area), code 12521. Please call the Information Line for up-to-date information on this meeting.

Agenda: On October 8, 1998, the committee will consider issues relating to the study and evaluation of spinal device assemblies. In the context of a preliminary background document entitled ''Guidance Document for the Preparation of IDE's for Spinal Assemblies,'' the committee will be asked to address scientific issues pertaining to the development of investigational device exemptions (IDE's) applications for spinal device assemblies. This will include inclusion/exclusion criteria, type of control(s), study endpoints, and length of followup. Single copies of the preliminary background document are available to the public by contacting the Division of Small Manufacturers

Assistance (DSMA), Center for Devices and Radiological Health, Food and Drug Administration, 5600 Fishers Lane, Rockville, MD 20857, 1–800–638–2041 or 301–443–6597, or by FAX 301–443–8818 and requesting by shelf number 2250.

On October 9, 1998, the committee will discuss, make recommendations, and vote on a premarket approval application for a cancellous bone cement.

Procedure: On October 8, 1998, from 11:30 a.m. to 6 p.m., and on October 9, 1998, from 8 a.m. to 5 p.m., the meeting is open to the public. Interested persons may present data, information, or views, orally or in writing, on issues pending before the committee. Written submissions may be made to the contact person by October 1, 1998. Oral presentations from the public will be scheduled between approximately 1:30 p.m. and 2 p.m. on October 8, 1998, and between approximately 8:15 a.m. and 8:45 a.m. on October 9, 1998. Near the end of committee deliberations on both days, a 30-minute open public hearing will be conducted for interested persons to address issues specific to the submission before the committee. Time allotted for each presentation may be limited. Those desiring to make formal oral presentations should notify the contact person by October 1, 1998, and submit a brief statement of the general nature of the evidence or arguments they wish to present, the names and addresses of proposed participants, and an indication of the approximate time requested to make their presentation.

Closed Presentation of Data: On October 8, 1998, from 9:30 a.m. to 10:30 a.m., the meeting will be closed to the public to permit the committee to hear and review trade secret and/or confidential commercial information (5 U.S.C. 552b(c)(4)) on IDE's.

Closed Committee Deliberations: On October 8, 1998, from 10:30 a.m. to 11:30 a.m., the meeting will be closed to the public to permit FDA to present to the committee trade secret and/or confidential information (5 U.S.C. 552b(c)(4)) regarding present and future FDA issues.

FDA regrets that it was unable to publish this notice 15 days prior to the October 8 and 9, 1998, Orthopaedic and Rehabilitation Devices Panel of the Medical Devices Advisory Committee meeting. Because the agency believes there is some urgency to bring these issues to public discussion and qualified members of the Orthopaedic and Rehabilitation Devices Panel of the Medical Devices Advisory Committee were available at this time, the Commissioner concluded that it was in the public interest to hold this meeting even if there was not sufficient time for the customary 15-day public notice.

Notice of this meeting is given under the Federal Advisory Committee Act (5 U.S.C. app. 2).

Dated: September 22, 1998.

Michael A. Friedman,

Deputy Commissioner for Operations.

[FR Doc. 98–25905 Filed 9–23–98; 4:88 pm]

BILLING CODE 4160–01–F

DEPARTMENT OF THE INTERIOR

Office of the Secretary

Minerals Management Advisory Board; Notice of Renewal Revision

AGENCY: Minerals Management Service, DOI.

ACTION: Minerals Management Advisory Board notice of renewal/revision.

SUMMARY: This notice is published in accordance with section 9(a)(2) of the Federal Advisory Committee Act (5 U.S.C. Appendix). Notice is hereby given that the Secretary of the Interior is renewing the Minerals Management Advisory Board Charter and revising it to reflect minor membership changes in the Royalty Policy Committee and the Alaska Outer Continental Shelf Region Offshore Advisory Committee. The charter for the OCS Scientific Committee is expanded to include the OCS Sand and Gravel Program.

The purpose of the Minerals Management Advisory Board is to provide advice to the Secretary of the Interior and other officers of the Department in the performance of discretionary functions of the OCS Lands Act, as amended, including all aspects of leasing, exploration, development, and protection of the resources of the OCS. The Board also advises the Department on discretionary functions under the Federal Oil and Gas Royalty Management Act of 1982, the Geothermal Steam Act of 1970, the mineral leasing laws for coal and other solid mineral leases.

FOR FURTHER INFORMATION CONTACT: Further information regarding the Committee may be obtained from Terry Holman, Program Management Officer, Minerals Management Service, Department of the Interior, 1849 C Street, NW., Washington, DC 20240.

Certification of Statement

I hereby certify that the renewal and revision of the Minerals Management Advisory Board Charter is in the public interest in connection with the performance of duties imposed on the Department of the Interior by 43 U.S.C. 1331 et seq., 30 U.S.C. 1701 et seq., and 30 U.S.C. 1001 et seq.

Dated: September 21, 1998.

Bruce Babbitt,

Secretary of the Interior.

[FR Doc. 98–25804 Filed 9–25–98; 8:45 am]

BILLING CODE 4310–MR–M

DEPARTMENT OF THE INTERIOR

Fish and Wildlife Service

Notice of Availability of Final Programmatic Environmental Assessment and Draft Comprehensive Conservation Plan for Cabeza Prieta National Wildlife Refuge and Wilderness

AGENCY: Fish and Wildlife Service, Interior.

ACTION: Notice.

SUMMARY: This notice advises the public that the U.S. Fish and Wildlife Service (Service) has completed a Final Programmatic Environmental Assessment and associated Draft Comprehensive Conservation Plan (CCP) for the Cabeza Prieta National Wildlife Refuge and Wilderness, Ajo, Arizona. A Finding of No Significant Impact (FONSI) has been issued consequent to the issuance of the Final Programmatic Environmental Assessment (EA). The Service is furnishing this notice in compliance with Service CCP policy: (1) to advise other agencies and the public of the availability of the documents, and (2) to obtain input, comments, and suggestions with respect to the Service's proposed management objectives and strategies detailed in the draft CCP document.

Approval of the Programmatic EA constitutes the definition of appropriate management approaches leading to the achievement of the refuge's purposes and mission of the National Wildlife Refuge System. It is out of this basic approach that draft CCP objectives and strategies were developed and attached to the Programmatic EA. The proposed management changes include, but are not necessarily limited to the following approaches:

- A continuation of access to refuge lands by permit only;
- Reclamation of Childs Mountain Summit resulting in the net reduction of development footprint from 5 acres to less than 1 acre (400% reduction) as part of the Federal Aviation Administration (FAA) ARSR–4 Radar Construction project. [FAA FONSI /Record of Decision (ROD) dated Jan. 22,

1998 and FONSI/ ROD Amendment dated March 23, 1998, are incorporated by reference;]

- The setting of research priorities to include: endangered species, effects of artificial waters, biodiversity and ecological issues, water quality, military activities, wilderness resources, and archaeological/ cultural resources;
- The closure of almost 30 miles of the existing ''administrative trail system'' within designated wilderness to any routine motorized administrative access;
- The closure and reclamation of almost 139 miles of old trails in designated wilderness not considered useful in the management of refuge resources;
- The enhancement of monitoring and evaluation of impacts of management and public activities of refuge resources;
- A focus on evaluating the effect of developed waters on refuge resources;
- A continuation and expansion of strategies that benefit desert bighorn sheep and endangered Sonoran pronghorn;
- An expansion of strategies that benefit a diversity of flora and fauna and their habitats;
- An allowance for maintenance and minor rehabilitation of a limited number of refuge waters within wilderness;
- A continuation of the use of photo-monitoring and telemetry of Sonoran pronghorn and other species;
- Implementation of a Recreational Impact Monitoring Plan;
- Development and implementation of strategies to prevent border cattle encroachment;
- Continuing development of strategies and time-frame for short and long term reclamation of the summit of Childs Mountain;
- Establishment of a watchable wildlife and interpretive area on Childs Mountain;
- A continuation of 4 wheel drive restrictions to access El Camino del Diablo and Christmas Pass/Tacna Roads;
- In accordance with Refuge Compatibility Policy, assess the possible expansion of the hunt program to include closely controlled deer hunting and small game hunting in a limited number of geographically defined areas of the refuge;
- Inclusion of management flexibility with respect to allowable vehicles in non wilderness areas;
- A continuation of case-by-case restrictions on the use of horses and pack animals on the refuge;
- Possible acquisition of 30 acres next to refuge headquarters for use as a desert interpretive site;
- Expansion of efforts to cooperate with adjoining jurisdictions and refuge stakeholders;
- Continued improvement in relationships with the military and other federal agencies, Tohono O'Odham Nation, the Hia-Ced O'Odham, and the Yuman Native American interests on the west side of the refuge;
- Improvements to staffing and funding;
- Continued restrictions on the use of wood campfires; and
- In accordance with Refuge Compatibility Policy, development of a Copper Canyon auto tour loop in cooperation with the BLM.

The Programmatic EA contained a range of four management-framework alternatives inclusive of: the Proposed Alternative, a No-Action Alternative, a Progressive Management (Development oriented) Alternative, and a Limited or Restricted Management Alternative.

Based on a review and evaluation of the information contained in the Programmatic EA, it was determined that the approval of the individual or cumulative approaches reflected in the Proposed Alternative, did not constitute a major Federal action which would significantly affect the quality of the human environment within the meaning of Section 102(2)(c) of the National Environmental Policy Act (NEPA). Therefore, an Environmental Impact Statement is not required. However, it is the intent of the Service to revisit questions of potential significant environmental consequences in accordance with NEPA upon consideration of the implementation of site specific proposals called for and discussed in the final plan document.

DATES: The Service will be open to written advice and comment on the draft CCP Objectives and Strategies through November 15, 1998.

ADDRESSES: Address requests for copies of the document, comments on the draft CCP objectives and strategies, or request for more information to: Mr. Tom Baca, Natural Resource Planner, U.S. Fish and Wildlife Service, Southwest Region, Division of Refuges and Wildlife, PO Box 1306, Albuquerque, NM 87103.

SUPPLEMENTARY INFORMATION: It is the U.S. Fish and Wildlife Service policy to have all lands within the National Wildlife Refuge System managed in accordance with an approved CCP. The CCP guides management decisions and identifies refuge goals, long-range objectives, and strategies for achieving refuge purposes. The planning process has considered and will continue to consider many elements, including habitat and wildlife management, habitat protection and acquisition, public and recreational uses, and cultural resources. Continued public input into this planning process is essential. The CCP document when finalized will provide other agencies and the public with a clear understanding of the desired conditions for the Refuges and how the Service will implement management strategies.

Review of these projects will be conducted in accordance with the requirements of the National Environmental Policy Act of 1969, as amended (42 U.S.C. 4321 *et seq.*), NEPA Regulations (40 CFR parts 1500–1508), other appropriate Federal laws and regulations, including the National Wildlife Refuge System Improvement Act of 1997, Executive Order 12996, and Service policies and procedures for compliance with those regulations.

The Service anticipates that a Final CCP will be available by December 30, 1998.

Dated: September 22, 1998.

Geoffrey L. Haskett,

Deputy Regional Director.

[FR Doc. 98–25963 Filed 9–25–98; 8:45 am]

BILLING CODE 4310–55–P

DEPARTMENT OF THE INTERIOR

Geological Survey

Federal Geographic Data Committee (FGDC); Public Comment on the Proposal to Develop the ''Biological Nomenclature and Taxonomy Data Standard'' as a Federal Geographic Data Committee Standard

ACTION: Notice; Request for comments.

SUMMARY: The FGDC is soliciting public comments on the proposal to develop a ''Biological Nomenclature and Taxonomy Data Standard.'' If the proposal is approved, the standard will be developed following the FGDC standards development and approval process and will be considered for adoption by the FGDC.

In its assigned federal leadership role in the development of the National Spatial Data Infrastructure (NSDI), the Committee recognizes that FGDC standards must also meet the needs and recognize the views of State and local governments, academia, industry, and the public. The purpose of this notice is to solicit such views. The FGDC invites the community to review the proposal and comment on the objectives, scope, approach, and usability of the proposed standard; identify existing related standards; and indicate their interest in

participating in the development of the standard.

DATES: Comments must be received on or before October 15, 1998.

CONTACT AND ADDRESSES: Comments may be submitted via Internet mail or by submitting electronic copy on diskette. Send comments via internet to: gdc-taxpro@www.fgdc.gov.

A soft copy version, on a 3.5×3.5 diskette in WordPerfect 5.0 or 6.0/6.1 format, along with one hardcopy version of the comments may be sent to the FGDC Secretariat (attn: Jennifer Fox) at U.S. Geological Survey, 590 National Center, 12201 Sunrise Valley Drive, Reston, Virginia, 20192.

SUPPLEMENTARY INFORMATION: Following is the complete proposal for the ''Biological Nomenclature and Taxonomy Data Standard''.

Project Title: Development of a Biological Nomenclature and Taxonomy Data Standard.

Date of Proposal: June 3, 1998.

Submitting Organization: FGDC Biological Data Working Group.

Point of Contact: Barbara Lamborne, Environmental Protection Agency, Washington, D.C. (202) 260–3643 lamborne.barbara@epa.gov.

Ojbectives: The objectives are to provide a standardized, comprehensive, and consistent reference of scientific names (nomenclature) and associated classification (taxonomy) for biological species. This comprehensive standard will thus support the coordination, discovery, comparison, exchange, organization and integration of biological data among different government and non-government agencies, organizations, and individuals. The standard will be based on the cooperative activities of many groups (including several federal agencies) that are maintaining active programs in developing standardized credible nomenclatures and taxonomies for specific biological groups of interest to meet their respective missions. This data standard will also link to and support the implementation of the existing FGDC Vegetation Classification Standard, FGDC Wetlands Classification Standard, and the proposed Biological Profile of the FGDC Content Standard for Digital Geospatial Metadata, as well other biologically oriented standards, by serving as the accepted standard reference for biological nomenclature and taxonomy for these standards.

Scope: This standard will focus on providing a standardized and consistent reference for scientific names (including scientific synonyms and common names) and taxonomy for plant, animal, fungal, moneran and protist species. The standard should be used to support the discovery, comparison, exchange, organization and integration of any biological data (or related information product) that includes scientific names of species (or higher taxonomic groups) as part of its data structure.

Justification/Benefits: Most biological data sets include some data on the scientific names (nomenclature) and/common (vernacular) names and associated classification (taxonomy) of the species and/or higher taxonomic groups (genera, families, etc.) which are the focus of the data set. Due to the long scientific history and inherent complexity of the science of payments, many species have been assigned two or more different scientific names and associated classifications by different specialists. The application of common names to organisms is even less consistent and thus more complex. This relatively common situation obviously makes it difficult to locate, compare, share, exchange, and integrate biological data among different agencies and organizations in an accurate and efficient manner. Therefore, a key element in fostering development of a distributed federal of biological data and information through the National Spatial Data Infrastructure (and the complementary National Biological Information Infrastructure) is the availability of a comprehensive, standardized reference for biological nomenclature and taxonomy that can be used by anyone interested in locating, comparing, exchanging, and integrating two or more biolocial data sets. This proposed standard will provide a consistent reference of the ''accepted'' scientific names for biological species, together with synoynyms and common names. Users will thus be able to rely upon this standard reference to determine the accepted scientific name which then can be used to compare, relate, exchange and/or integrate biological data that may use different scientific or common names for the same species.

The proposed standard will also serve as the source of scientific nomenclature and taxonomy for the existing FGDC Vegetation Classification Standard, FGDC Wetlands Classification Standard, and for the proposed Biological Profile of the FGDC geospatial metadata content standard. It will thus support the further implementation of these FGDC standards efforts.

Development Approach: Currently, six Federal agencies (Environmental Protection Agency, National Oceanic and Atmospheric Administration, Agricultural Research Service, Natural Resources Conservation Service, the United States Geological Survey, and the Smithsonian Institution National Museum of Natural History) are participating in the development and operation of the Integrated Taxonomic Information System (ITIS), a WWW-accessible database of scientific names and taxonomy for biota (http://www.itis.usda.gov/itis).

ITIS relies on the continuance of independently-funded, scientific activities of various agencies, organizations, and institutions to contribute reliable data that are complaint with ITIS standards. Through this federation of scientific entities agreeing to work together through common standards, the creation and maintenance of a standardized, comprehensive taxonomic reference for the Nation is possible. It is inherent in the adoption of ITIS as the biological nomenclature and taxonomic standard that the FGDC and its members recognize the data contributors to ITIS, particularly supporting U.S. Federal projects such as the PLANTS database of USDA, which has previously been recognized as an FGDC standard.

ITIS was endorsed as a national-level standard in the National Performance Review/Government Information Technology Services Board recent report ''Access America—Reengineering Through Information Technology''. The report recommends ''Implementing the national-level standards that are needed to support greater sharing and use of biological information'' and broadening the ITIS community of partners.

The FGDC Biological Data Working Group will work with an interagency project team representing the ITIS Federal partner agencies to develop a draft FGDC data standard, based on the consideration of the existing ITIS system as the possible ''foundation'' for this standard. The draft standard then will be submitted by the Biological Data Working Group to the FGDC Standards Working Group for review and approval prior to being distributed for full public review.

Development and Completion Schedule: The Biological Data Working Group will ask ITIS Federal agency partners to form an ad hoc standards project team to begin development of the draft data standard as soon as the initial public review of the standards proposal is completed. It is expected that development of a draft data standard will take the standards project team approximately 3 full months, with another 2 months for the FGDC Biological Data Working Group to review and revise the work of the standards project team as needed. The Biological Data Working Group will

then submit the draft standard to the Standards Working Group for review and approval before release of the standard for the requisite 90-day public review period. Following public review, the standard project team will evaluate and summarize all comments received, make the necessary revisions to the standards, and prepare the final draft for submission to the Standards Working Group, via the Biological Data Working Group. It is expected that the standard could be completed and approved by the FGDC Committee within approximately 10–12 months from the time the Standards Working Group approves this standards proposal.

Resources Required: The members of the FGDC Biological Data Working Group, working with the standards project team comprised of representatives of the ITIS Federal agency partners, have adequate resources (primarily staff time) available to support development of the standard. If there is interest on the part of NSGIC and/or the National Association of Counties (or other FGDC collaborating groups or organizations) in attending and participating in meetings of the FGDC Biological Data Working Group focused on development of the proposed data standard, it is possible that FGDC funds may be needed to help defray travel costs for these non-Federal participants.

Potential Participants: The FGDC Biological Data Working Group includes representatives of eight different Federal agencies, plus The Nature Conservancy. The ITIS partnership includes six different U.S. Federal agencies, plus biological scientists from other government agencies, natural history museums, universities, and international organizations. ITIS has recently expanded its partnership to include the Canadian government. This diverse group of existing participants will be enhanced during the standards development process by an aggressive ''outreach'' campaign to enlist the participation and input of other agencies, organizations, and individuals with expertise, responsibilities, and/or interests in the area of biological nomenclature and taxonomy and biological data exchange.

Related Standards: The proposed standard related directly to and will support full implementation of the FGDC Vegetation Classification Standard and the proposed Biological Profile of the FGDC metadata content standard. It also relates to the FGDC Wetlands Classification Standard.

Other Targeted Authorization Bodies: This proposed standard is not currently targeted for consideration by any other authorizing bodies. Because of its direct linkage to the FGDC Vegetation Classification Standard and FGDC metadata content standard (through the proposed Biological Profile), it is anticipated that the proposed standard (once approved by the FGDC) potentially could be ''linked'' with either or both of these FGDC standards in any subsequent review and authorization of these standards by ANSI, ISO, or other group.

Dated: September 3, 1998.

Richard E. Witmer,

Chief, National Mapping Division.

[FR Doc. 98–25819 Filed 9–25–98; 8:45 am]

BILLING CODE 4310–Y7–M

DEPARTMENT OF THE INTERIOR

Minerals Management Service

Outer Continental Shelf (OCS) Policy Committee of the Minerals Management Advisory Board; Notice and Agenda for Meeting

AGENCY: Minerals Management Service, Interior.

SUMMARY: The OCS Policy Committee of the Minerals Management Advisory Board will meet at the Marriott Bay Point Village Resort In Panama City, Florida, on October 20–21, 1998.

The agenda will cover the following principal subjects:

—Comprehensive National Energy Strategy
—President's Decision on the Leasing Moratoria Extension
—National Ocean Commission and Federal Follow-Up Activities
—Preparation for Developing the Next 5-Year Leasing Program
—Coastal Impact Assistance
—OCS Scientific Committee Update
—Regional Updates: Alaska, Gulf of Mexico, and Pacific Regions
—Subcommittee on Oil Spill Financial Responsibility Report
—Hard Minerals Update

The meeting is open to the public. Upon request, interested parties may make oral or written presentations to the OCS Policy Committee. Such request should be made no later than October 9, 1998, to the Minerals Management Service, 381 Elden Street, MS–4001, Herndon, Virginia, 20170, Attention: Jeryne Bryant.

Requests to make oral statements should be accompanied by a summary of the statement to be made. For more information, call Jeryne Bryant at (703) 787–1211.

Minutes of the OCS Policy Committee meeting will be available for public inspection and copying at the Minerals Management Service in Herndon, Virginia.

DATES: Tuesday, October 20 and Wednesday, October 21, 1998.

ADDRESSES: The Marriott Bay Point Village Resort, 4200 Marriott Drive, Panama City, Florida 32408—(850) 234–3307 or (800) 874–7105.

FOR FURTHER INFORMATION CONTACT: Jeryne Bryant at the address and phone number listed above.

Authority: Federal Advisory Committee Act, P.L. No. 92–463, 5 U.S.C. Appendix 1, and the Office of Management and Budget's Circular No. A–63, Revised.

Dated: September 21, 1998.

Carolita U. Kallaur,

Associate Director for Offshore Minerals Management.

[FR Doc. 98–25855 Filed 9–25–98; 8:45 am]

BILLING CODE 4310–MR–M

DEPARTMENT OF THE INTERIOR

National Park Service

Correction; Bighorn Canyon National Recreation Area

Concession Permit for Operation of the Ok-A-Beh Marina at Bighorn Canyon National Recreation Area (North Unit)

CORRECTION: In notice document 98–15129, appearing on page 31228, of the June 8, 1998 (Volume 63, Number 109) issue, and in the correction notice appearing on page 41589, of the August 4, 1998 (Volume 63, Number 149) issue, the **EFFECTIVE DATE** and **SUPPLEMENTARY INFORMATION** is corrected to read as follows:

EFFECTIVE DATE: The application period is extended ninety (90) days. Offers will be accepted for one hundred eighty (180) days under the terms described in the Prospectus. Any offer, including that of the existing concessioner, must be received by the Superintendent, Bighorn Canyon National Recreation Area, P.O. Box 485, Fort Smith, Montana 59035, by December 16, 1998, to be considered and evaluated.

SUPPLEMENTARY INFORMATION: This permit renewal has been determined to be categorically excluded from the procedural provisions of the National Environmental Policy Act and no environmental document will be prepared.

The existing concessioner, LuCon Corporation, has performed their obligations to the satisfaction of the Secretary under the existing permit which expires by limitation of time on December 31, 1998. Therefore, pursuant to the provisions of the Concessions

Policy Act (79 Stat. 969; 16 U.S.C. § 20d), the concessioner is entitled to be given preference in the renewal of the permit and in the award of a new permit, providing that the existing concessioner submits a responsive offer (a timely offer which meets the terms and conditions of the Prospectus). This means that the permit will be awarded to the party submitting the best offer, provided that if the best offer was not submitted by the existing concessioner, then the existing concessioner will be afforded the opportunity to match the best offer. If the existing concessioner agrees to match the best offer, then the permit will be awarded to the existing concessioner.

If the existing concessioner does not submit a responsive offer, the right of preference in renewal shall be considered to have been waived, and the permit will then be awarded to the party that has submitted the best responsive offer.

The Secretary will consider and evaluate all offers received as a result of this notice. Any offer, including that of the existing concessioner, must be received by the Superintendent, Bighorn Canyon National Recreation Area, P.O. Box 485, Fort Smith, Montana 59035, not later than one hundred eighty (180) days following release of the Prospectus to be considered and evaluated.

Dated: September 17, 1998.

John H. King,

Acting Director, Intermountain Region.

[FR Doc. 98–25806 Filed 9–25–98; 8:45 am]

BILLING CODE 4310–70–P

DEPARTMENT OF THE INTERIOR

National Park Service

National Register of Historic Places; Notification of Pending Nominations

Nominations for the following properties being considered for listing in the National Register were received by the National Park Service before September 19, 1998. Pursuant to section 60.13 of 36 CFR Part 60 written comments concerning the significance of these properties under the National Register criteria for evaluation may be forwarded to the National Register, National Park Service, 1849 C St. NW, NC400, Washington, DC 20240. Written comments should be submitted by October 13, 1998.

Carol D. Shull,

Keeper of the National Register.

California

Contra Costa County

Riverview Union High School Building, 1500 W. 4th St., Antioch, 98001243

Madera County

Halifax Apartments, 6376 Yucca St., Los Angeles, 98001242

Colorado

Garfield County

Glenwood Springs Hydroelectric Plant, 601 6th St., Glenwood Springs, 98001244

Tennessee

Trousdale County

Hartsville Battlefield (Tennessee Resources of the American Civil War MPS), Address Restricted, Hartsville vicinity, 98001247

Texas

Galveston County

Melrose Apartment Building (Galveston Central Business District MRA), 2002 Post Office St., Galveston, 98001246

[FR Doc. 98–25805 Filed 9–25–98; 8:45 am]

BILLING CODE 4310–70–P

DEPARTMENT OF THE INTERIOR

National Park Service

Notice of Inventory Completion for Native American Human Remains from New London County, CT in the Possession of the Robert S. Peabody Museum of Archaeology, Phillips Academy, Andover, MA

AGENCY: National Park Service.

ACTION: Notice.

Notice is hereby given in accordance with provisions of the Native American Graves Protection and Repatriation Act (NAGPRA), 43 CFR 10.9, of the completion of an inventory of human remains from New London County, CT in the possession of the Robert S. Peabody Museum of Archaeology, Phillips Academy, Andover, MA.

A detailed assessment of the human remains was made by Robert S. Peabody Museum of Archaeology professional staff in consultation with representatives of the Mashantucket Pequot Tribe of Connecticut.

In 1921 or 1922, human remains representing six individuals were recovered from the Ecclestone site, Noank, CT during Robert S. Peabody Museum excavations conducted by Warren K. Moorehead, museum curator. No known individuals were identified. No associated funerary objects are present.

Based on the Ecclestone site report, these individuals have been determined to be Native American. A 1921 newspaper article indicates the Ecclestone site is an ''Indian burying ground'' located along the Mystic River, southwest of Mystic, CT. The Ecclestone site is located centrally in the area where principal Pequot villages existed from the late Woodland to the early historic period.

Based on the above mentioned information, officials of the Robert S. Peabody Museum of Archaeology have determined that, pursuant to 43 CFR 10.2 (d)(1), the human remains listed above represent the physical remains of six individuals of Native American ancestry. Officials of the Robert S. Peabody Museum of Archaeology have also determined that, pursuant to 43 CFR 10.2 (e), there is a relationship of shared group identity which can be reasonably traced between these Native American human remains and the Mashantucket Pequot Indian Tribe of Connnecticut.

This notice has been sent to officials of the Mashantucket Pequot Indian Tribe of Connnecticut. Representatives of any other Indian tribe that believes itself to be culturally affiliated with these human remains should contact James W. Bradley, Director, Robert S. Peabody Museum of Archaeology, Phillips Academy, Andover, MA 01810; telephone: (978) 749-4490, before October 28, 1998. Repatriation of the human remains to the Mashantucket Pequot Tribe of Connecticut may begin after that date if no additional claimants come forward.

Dated: September 14, 1998.

Francis P. McManamon,

Departmental Consulting Archeologist, Manager, Archeology and Ethnography Program.

[FR Doc. 98–25807 Filed 9–25–98; 8:45 am]

BILLING CODE 4310–70–F

DEPARTMENT OF THE INTERIOR

National Park Service

Notice of Inventory Completion for Native American Human Remains and Associated Funerary Objects from New Mexico in the Possession of the U.S. Army Corps of Engineers, Albuquerque District, Albuquerque, NM

AGENCY: National Park Service

ACTION: Notice

Notice is hereby given in accordance with provisions of the Native American

Graves Protection and Repatriation Act (NAGPRA), 43 CFR 10.9, of the completion of an inventory of human remains and associated funerary objects in the possession of the U.S. Army Corps of Engineers, Albuquerque District, Albuquerque, NM.

A detailed assessment of the human remains was made by Army Corps of Engineers professional staff in consultation with representatives of the Pueblo of Cochiti, Pueblo of Santa Clara, Jicarilla Apache Tribe, Mescalero Apache Tribe, Pueblo of Acoma, Pueblo of Isleta, Pueblo of Jemez, Pueblo of Laguna, Pueblo of Nambe, Pueblo of Picuris, Pueblo of Pojoaque, Pueblo of San Felipe, Pueblo of San Ildefonso, Pueblo of San Juan, Pueblo of Sandia, Pueblo of Santa Ana, Pueblo of Santo Domingo, Pueblo of Taos, Pueblo of Tesuque, Pueblo of Zia, and Pueblo of Zuni.

Between 1962-1966, human remains representing 118 individuals were recovered from the Pueblo del Encierro site (LA 70) during legally authorized salvage excavations conducted by the School of American Research. No known individuals were identified. The 100 associated funerary objects include ceramic sherds, ceramic vessels, lithic flakes, one mano fragment, matting, and worked bone including two bone whistles.

Between 1962-1966, human remains representing 89 individuals were recovered from the Alfred Herrera site (LA 6455) during legally authorized salvage excavations conducted by the School of American Research. No known individuals were identified. The 48 associated funerary objects include ceramic sherds, a Cieniguilla-glazed ceramic bowl, a San Clemente glaze polychrome bowl, an Agua Fria bowl, mat impressions, lithic flakes, and worked bone.

Between 1962-1966, human remains representing 19 individuals were recovered from the North Bank site (LA 6462) during legally authorized salvage excavations conducted by the School of American Research. No known individuals were identified. The five associated funerary objects include ceramic sherds and worked bone.

Between 1962-1966, human remains representing seven individual were recovered from the Ojito del Canyoncito site (LA 9154) during legally authorized salvage excavations conducted by the School of American Research. No known individuals were identified. The three associated funerary objects are a ceramic sherd and lithic flakes.

Based on cultural material, skeletal morphology of the human remains, and architecture, these four sites listed above have been identified as Middle Rio Grande Puebloan villages occupied between 900-1500 A.D. Based on skeletal morphology, these human remains have been identified as Native American. All the human remains from these sites are identified as Puebloan, and all are believed to be ancestral to present day Pueblo of Cochiti people based on the archaeological context of their collection or excavation.

Based on the above mentioned information, officials of the U.S. Army Corps of Engineers have determined that, pursuant to 43 CFR 10.2 (d)(1), the human remains listed above represent the physical remains of 233 individuals of Native American ancestry. Officials of the U.S. Army Corps of Engineers have also determined that, pursuant to 43 CFR 10.2 (d)(2), the 156 objects listed above are reasonably believed to have been placed with or near individual human remains at the time of death or later as part of the death rite or ceremony. Lastly, officials of the U.S. Army Corps of Engineers have determined that, pursuant to 43 CFR 10.2 (e), there is a relationship of shared group identity which can be reasonably traced between these Native American human remains and associated funerary objects and the Pueblo of Cochiti.

This notice has been sent to officials of the Pueblo of Cochiti, Pueblo of Santa Clara, Jicarilla Apache Tribe, Mescalero Apache Tribe, Pueblo of Acoma, Pueblo of Isleta, Pueblo of Jemez, Pueblo of Laguna, Pueblo of Nambe, Pueblo of Picuris, Pueblo of Pojoaque, Pueblo of San Felipe, Pueblo of San Ildefonso, Pueblo of San Juan, Pueblo of Sandia, Pueblo of Santa Ana, Pueblo of Santo Domingo, Pueblo of Taos, Pueblo of Tesuque, Pueblo of Zia, and Pueblo of Zuni. Representatives of any other Indian tribe that believes itself to be culturally affiliated with these human remains and associated funerary objects should contact Dr. Ronald Kneebone, Archaeologist, U.S. Army Corps of Engineers, Albuquerque District, 4101 Jefferson Plaza NE., Albuquerque, NM 87109–3435; telephone: (505) 342-3355, before October 28, 1998. Repatriation of the human remains and associated funerary objects to the Pueblo of Cochiti may begin after that date if no additional claimants come forward.

Dated: September 14, 1998.

Francis P. McManamon,

Departmental Consulting Archeologist, Manager, Archeology and Ethnography Program.

[FR Doc. 98–25809 Filed 9–25–98; 8:45 am]

BILLING CODE 4310–70–F

INTERNATIONAL TRADE COMMISSION

USITC SE–98–017

Sunshine Act Meeting

AGENCY HOLDING THE MEETING: United States International Trade Commission, Room 101, 500 E Street SW., Washington, DC 20436.

FEDERAL REGISTER CITATION OF PREVIOUS ANNOUNCEMENT: September 23, 1998, 63 FR 50926.

CHANGE OF DATE AND TIME:

Original Date and Time: Thursday, October 1, 1998 10:00 a.m.

New Date and Time: Friday, October 2, 1998 10:00 a.m.

STATUS: Open to the public.

Notice is hereby given that a Commission meeting was scheduled for October 1, 1998 at 10:00 a.m., and in conformity with 19 CFR 201.37(a) and (b), the Commission has determined to change the date and time for the meeting to October 2, 1998 at 10:00 a.m.

Commissioners Bragg, Miller, Crawford, Hillman, Koplan, and Askey determined by circulation of an action jacket that Commission business requires the change in date and time, and affirmed that no earlier notice of the change was possible, and directed the issuance of this notice at the earliest practicable time.

CONTACT PERSON FOR FURTHER INFORMATION: Donna R. Koehnke, Secretary, (202) 205–2000.

By order of the Commission.

Issued: September 23, 1998.

Donna R. Koehnke,

Secretary.

[FR Doc. 98–25962 Filed 9–24–98; 11:19 am]

BILLING CODE 7020–02–P

DEPARTMENT OF JUSTICE

Office of Community Oriented Policing Services

Agency Information Collection Activities: Proposed Collection; Comment Request

ACTION: Notice of information collection under review; problem solving Partnerships: Analysis and Assessment Surveys.

The proposed information collection is published to obtain comments from the public and affected agencies. Comments are encouraged and will be accepted until November 27, 1998. Written comments and suggestions from the public and affected agencies concerning the proposed collection of

information are requested. Comments should address one or more of the following four points:

(1) Evaluate whether the proposed collection of information is necessary for the proper performance of the functions of the agency, including whether the information will have practical utility;

(2) evaluate the accuracy of the agency's estimate of the burden of the proposed collection of information, including the validity of the methodology and assumptions used;

(3) enhance the quality, utility, and clarity of the information to be collected; and

(4) minimize the burden of the collection of information on those who are to respond, including through the use of appropriate automated, electronic, mechanical, or other technological collection techniques or other forms of information technology, e.g., permitting electronic submission of responses. Written comments and/or suggestions regarding the items contained in this notice, especially regarding the estimated public burden and associated response time, should be directed to the COPS Office, PPSE Division, 1100 Vermont Ave, NW, Washington, DC 20530–0001. Comments also may be submitted to the COPS Office via facsimile to 202–633–1386. In addition, comments may be submitted to the Department of Justice (DOJ), Justice Management Division, Information Management and Security Staff, Attention: Department Clearance Officer, Suite 850, 1001 G Street, NW, Washington, DC, 20530. Comments may be submitted to DOJ via facsimile to 202–514–1534.

Overview of this information collection:

(1) *Type of Information Collection:* New Collection.

(2) *Title of the Form/Collection:* Problem Solving Partnerships: Analysis and Assessment Surveys.

(3) *Agency form number, if any, and the applicable component of the Department of Justice sponsoring the collection:* Form: COPS 29/01. Office of Community Oriented Policing Services, U.S. Department of Justice.

(4) *Affected public who will be asked or required to respond, as well as a brief abstract:* Local law enforcement agencies that received grant funding for the Problem Solving Partnerships (PSP) grant from the COPS Office will be surveyed regarding the activities and outcomes of the analysis and assessment phases of their grant project.

The agencies implementing the problem-solving process through their PSP grants vary significantly in terms of population size, primary problems, location, partners, evaluators, and demographics. The agencies and their partners are working together to target either specific property crimes, violent together to target either specific property crimes, violent crimes, problems associated with drugs and/or alcohol, or crimes related to public disorder.

The COPS Office is looking to provide documentation that may stimulate the promotion of problem solving as a way of addressing crime/disorder problems for both current and future grantees looking to implement the problem-solving approach. Copies of the survey instruments to be used by the contractor to obtain information from the PSP grantees are attached. The Analysis Survey will be distributed to grantees once OMB approval is obtained. The Assessment Survey will be distributed to grantees at a later date, once agencies have completed evaluating the impact of their tailor-made responses. Information obtained from these surveys will be disseminated to other departments to promote the adoption of problem-solving approaches.

(5) *An estimate of the total number of respondents and the amount of time estimated for an average respondent to respond:* Each survey, the Analysis Survey and the Assessment Survey, will be administered one time: Appoxiamtely 470 respondents per survey administration, at 55 minutes per respondent per survey (including record-keeping).

(6) *An estimate of the total public burden (in hours) associated with the collection:* Approximately 861.6 hours.

If additional information is required contact: Mr. Robert B. Briggs, Clearance Officer, Untied States Department of Justice, Information Management and Security Staff, Justice Management Division, Suite 850, Washington Center, 1001 G Street, NW, Washington, DC 20530.

Dated: September 22, 1998.

Robert B. Briggs,

Department Clearance Officer, United States Department of Justice.

[FR Doc. 98–25801 Filed 9–25–98; 8:45 am]

BILLING CODE 4410–AT–M

DEPARTMENT OF JUSTICE

Civil Division; Agency Information Collection Activities: Extension of a Currently Approved Collection; Comment Request

ACTION: Notice of Information Collection Under Review; (Reinstatement, without change, of a previously approved collection for which approval has expired) Claims Under the Radiation Exposure Compensation Act.

The Department of Justice, Civil Division, has submitted the following information collection request for review and clearance in accordance with the Paperwork Reduction Act of 1995. Office of Management and Budget approval is being sought for the information collection listed below. This proposed information collection was previously published in the **Federal Register** on June 16, 1998, allowing for a 60-day public comment period.

The purpose of this notice is to allow an additional 30 days for public comment until October 28, 1998. This process is conducted in accordance with 5 CFR 1320.10.

Written comments and/or suggestions regarding the item(s) contained in this notice, especially regarding the estimated public burden and associated response time, should be directed to the Office of Management and Budget, Office of Information and Regulatory Affairs, Attention: Department of Justice Desk Officer, Washington, DC 20530. Additionally, comments may be submitted to OMB via facsimile to (202) 395–7285.

Comments may also be submitted to Department of Justice (DOJ), Justice Management Division, Information Management and Security Staff, Attention: Department Deputy Clearance Officer, Suite 850, 1001 G Street, NW, Washington DC 20530.

Written comments and/or suggestions from the public and affected agencies concerning the proposed collection of information should address one or more of the following four points:

(1) Evaluate whether the proposed collection of information is necessary for the proper performance of the function of the agency, including whether the information will have practical utility:

(2) Evaluate the accuracy of the agency's estimate of the burden of the proposed collection of information, including the validity of the methodology and assumptions used;

(3) Enhance the quality, utility, and clarity of the information to be collected; and

(4) Minimize the burden of the collection of information on those who are to respond, including through the use of appropriate automated, electronic, mechanical, or other technological collection techniques or other forms of information technology, e.g., permitting electronic submission of responses.

Overview of this information:

(1) *Type of information collection:* Extension of a previously approved collection.

(2) *The title of the form/collection:* Claims Under the Radiation Exposure Compensation Act.

(3) *The agency form number, if any, and the applicable component of the Department sponsoring the collection:* none. Civil Division, United States Department of Justice.

(4) *Affected public who will be asked or required to respond, as well as a brief abstract: Primary:* Individuals or households; *Other:* none.

Information is collected to determine whether an individual is entitled to compensation under the Radiation Exposure Compensation Act, 42 U.S.C. 2210 note (1994). Applicants include individuals who resided near the Nevada Test Site; former underground uranium miners; and, individuals who participated onsite in an atmospheric nuclear test.

(5) *An estimate of the total number of respondents and the amount of time estimated for an average respondent to respond/reply:* 914 annual respondents at 2.5 hours per response.

(6) *An estimate of the total public burden (in hours) associated with the collection:* 2,285 annual burden hours.

If additional information is required contact: Mrs. Brenda E. Dyer, Deputy Clearance Officer, United States Department of Justice, Information Management and Security Staff, Justice Management Division, Suite 850, Washington Center, 1001 G Street, NW, Washington, DC 20530.

Dated: September 22, 1998.

Brenda E. Dyer,

Department Deputy Clearance Officer, United States Department of Justice.

[FR Doc. 98–25798 Filed 9–25–98; 8:45 am]

BILLING CODE 4410–12–M

DEPARTMENT OF JUSTICE

Drug Enforcement Administration

[Docket No. 95–54]

Paul J. Caragine, Jr., Grant of Restricted Registration

On July 10, 1995, the Deputy Assistant Administrator, Office of Diversion Control, Drug Enforcement Administration (DEA), issued an Order to Show Cause to Paul Caragine, M.D., (Respondent) of Denville, New Jersey, notifying him of an opportunity to show cause as to why DEA should not deny his application for registration as a practitioner under 21 U.S.C. 823(f), as being inconsistent with the public interest.

By letter dated September 6, 1995, Respondent, through counsel, filed a request for a hearing, and following prehearing procedures, a hearing was held in Newark, New Jersey on June 25, 26 and 27 and November 19, 20 and 21, 1996, before Administrative Law Judge Mary Ellen Bittner. At the hearing, both parties called witnesses to testify and introduced documentary evidence. After the hearing, counsel for both parties submitted proposed findings of fact, conclusions of law and argument. On March 31, 1998, Judge Bittner issued her Opinion and Recommended Ruling, Findings of Fact, Conclusions of Law and Decision, recommending that Respondent's application for a DEA Certificate of Registration be denied. On April 17, 1998, Respondent filed exceptions and objections to Judge Bittner's opinion and on May 4, 1998, the Government filed its response to Respondent's exceptions. Thereafter, May 8, 1998, Judge Bittner transmitted the record of these proceedings to the Acting Deputy Administrator.

The Acting Deputy Administrator has considered the record in its entirety, and pursuant to 21 CFR 1316.67, hereby issues his final ordered based upon findings of fact and conclusions of law as hereinafter set forth. The Acting Deputy Administrator adopts, the findings of fact and conclusions of law set forth in the Opinion and Recommended Ruling, Findings of Fact, Conclusions of Law and Decision of the Administrative Law Judge, except as specifically noted below, but does not adopt the Administrative Law Judge's recommended ruling. His adoption is in no manner diminished by any recitation of facts, issues and conclusions herein, or of any failure to mention a matter of fact or law.

The Acting Deputy Administrator finds that Respondent received his medical degree in 1971 from what is now the University of Medicine and Dentistry of New Jersey, and first become licensed to practice medicine in New Jersey in 1973. He has practiced orthopedic medicine in various locations throughout the State of New Jersey. According to Respondent he has treated approximately 15,000 patients over a 20-year period.

In 1988, a New Jersey state agency initiated an investigation of Respondent based upon information from a pharmacist about prescriptions Respondent had issued to two individuals. Thereafter, a state investigator collected and reviewed controlled substance prescriptions issued by Respondent to 11 patients.

Based upon the investigator's review, the New Jersey Medical Board (Medical Board) held an informal hearing on November 27, 1991, regarding Respondent's prescribing practices. Respondent testified at that hearing that he believed in using pain killing drugs for patients who needed them to function. However, Respondent also stated that, ''I'm a lot stricter and tougher about this than I was. I mean, as I look back I realize that I was really too lenient with all these people. * * * I must appear to be a fool and I'm setting myself up here by going along with all these people, going along with all these stories. * * * No more. In the last three years I've had a really exemplary record. I'm very careful. I'm not so easy to get drugs out of like I use[d] to be.'' Respondent emphasized that only two of the patients at issue were still under his care and that he had told them that he would stop prescribing controlled substances to them on April 1, 1992. Respondent further asserted that ''there are no new people out there who represent future problems for this board or for me,'' and that ''I want the board to know that I really made an effort to clean up my act and not be permissive. My only past sin was being too gullible and too charitable.'' When asked what had prompted the change, Respondent stated that, ''It just occurred to me after a period of time that this couldn't be right.''

During this same time period, a local police department received information in August 1991 that two individuals were suspected of distributing narcotics. A subsequent survey of area pharmacies revealed that Respondent had issued most of the controlled substance prescriptions for these individuals. A review of the prescriptions showed, among other things, that one of the individuals obtained 480 dosage units of Vicodin, a Schedule III controlled substance, between August 22 and September 23, 1992, pursuant to prescriptions and refills authorized by Respondent. On October 2, 1992, a search warrant was executed at the individuals' apartment, during which investigators discovered marijuana, marijuana paraphernalia, 88 prescription vials (86 of which were empty), a prescription for Percocet written by Respondent and postdated October 7, 1992, and notes indicating drug distributions. Approximately 85–90% of the prescription vials indicated that they were authorized by Respondent.

The individuals were interviewed following their arrest for among other things, possession of marijuana and drug paraphernalia. One of the individuals admitted that she had filled

prescriptions from Respondent at one pharmacy and had then called him, said that she had lost a prescription, and had him authorize another prescription by telephone at a different pharmacy. The other individual admitted that he was addicted to controlled substances and stated that he sold controlled substances prescribed to him by Respondent.

On October 14, 1992, Respondent was interviewed by state and DEA investigators. According to the investigators, Respondent told them that he knew from the beginning of his treatment of the one individual that the patient was addicted to prescription drugs. At the hearing in this matter, Respondent disputed that he told this to the investigators, however Judge Bittner found the investigators to be more credible than Respondent. Respondent also admitted to the investigators that he issued the postdated prescription, but that he did so to save the individual the expense of another office visit and to better control his intake of controlled substances.

On July 12, 1993, a complaint was filed with the Medical Board seeking the temporary suspension and permanent revocation of Respondent's medical license on grounds that he had excessively prescribed controlled substances, issued prescriptions for controlled substances before the supply previously dispensed to the patient should have been exhausted, failed to maintain medical records on patients to whom he prescribed controlled substances, continued to prescribe narcotic analgesics to a patient after she was hospitalized for treatment of an overdose of these medications, and issued postdated prescriptions. Following a hearing, the Medical Board issued an order temporarily suspending Respondent's license to practice medicine effective August 25, 1993, and suspending his authority to handle controlled substances as of August 11, 1993, on grounds that Respondent had inappropriately prescribed controlled substances to 14 patients. As a result of the Medical Board's action, Respondent surrendered his previous DEA Certificate of Registration on August 16, 1993.

Subsequently, the Medical Board issued a supplemental complaint alleging that Respondent inappropriately prescribed controlled substances to two more individuals. Following a hearing, a state administrative law judge issued an initial decision dated June 29, 1994, finding that the patients at issue had serious problems which may have resulted in legitimate complaints of pain, but that Respondent ignored warning signs which should have alerted him to the dangers of dependency, that Respondent did not control the dispensing of controlled substances, and that the record supported a conclusion that each of the patients was drug dependent. The Judge concluded that Respondent's treatment of these patients constituted gross malpractice, gross negligence and gross incompetence, professional incompetence, and professional misconduct, and that revocation of Respondent's medical license was therefore justified.

On August 11, 1994, the Medical Board issued a Final Order adopting the administrative law judge's findings of fact (with minor exceptions) and conclusions of law. However, the Medical Board found that there was no evidence that Respondent's conduct was ''infected by improper motive, such as desire for profit, or complete disregard for patient well-being.'' Accordingly, the Medical Board concluded that instead of revocation of his medical license, the appropriate sanction was a two year suspension, retroactive to August 11, 1993, but with the second year stayed and served as a period of probation. The Medical Board also prohibited Respondent from prescribing controlled substances until it approved a plan for his resumption of such prescribing.

On August 11, 1994, Respondent executed the application for registration with DEA that is the subject of these proceedings. On October 28, 1994, the Medical Board modified its order, permitting Respondent to handle controlled substances if and when he gets his DEA privileges restored provided that for at least one year, he must maintain a log of his prescribing and dispensing; he may not prescribe or dispense more than a 14-day supply at one time to a patient; and he must refer a patient to a pain management specialist for a second opinion prior to completion of 90 days of prescribing or dispensing to the patient.

On February 24, 1994, a civil complaint was filed against Respondent in the United States District Court for the District of New Jersey alleging violations of 21 U.S.C. 842. On March 11, 1996, the parties filed a Stipulation for Compromise Settlement, pursuant to which Respondent agreed to pay $22,500 plus interest. The stipulation provided, among other things, that Respondent did not admit liability or fault and that the complaint would be dismissed with prejudice.

Since Respondent's patients that are at issue in this proceeding were supposedly being treated by Respondent for chronic pain, there was evidence presented by both the Government and Respondent regarding the treatment of chronic pain patients. An expert in pain management testified on behalf of the Government and his report regarding Respondent's patients was admitted into evidence. Respondent offered the report and the testimony before the Medial Board of his expert in pain management. The Government's expert testified that chronic pain is pain from the same etiology that lasts longer than six months. Respondent's expert opined that chronic pain patients are the most difficult patient population to treat, that many of these patients are angry and depressed, and that psychological complications make managing them more difficult.

Regarding the treatment of pain, the Government's expert testified that narcotics do not relive pain, but block the perception of pain in the brain, while non-steroidal anti-inflammatory drugs (NSAIDs) may operate on the source of the pain. According to the Government's expert, narcotic analgesics may be used in conjunction with NSAIDs where the pain is severe; preferably starting the patient on the narcotic first, then prescribing NSAIDs, and then gradually taking the patient off the narcotic and increasing the NSAIDs. Respondent's expert testified in the Medical Board proceeding that narcotics may be an appropriate permanent solution to a patient's pain problem but that ''[i]t's certainly not the first one we consider. Usually it's a choice of last resort, not first.''

Respondent also introduced into evidence at the hearing pages of the Handbook of Pain Management, G. John DiGregorio, M.D., Ph.D., et al. (3rd ed. 1991), which recommends initial treatment of chronic benign pain with NSAIDs. The Handbook further advises that ''[t]he regular use of opioid analgesics in benign pain syndromes is controversial,'' and that

> [p]hysicians who choose to use these types of opioids should be aware of the potential escalation by the patient to stronger types of medication during their treatment program. It is for these reasons that all efforts should be made not to utilize opioid treatment in these types of syndromes. the administration of strong opioids in chronic benign pain syndromes is to be avoided if at all possible, since the resulting problems of tolerance, physical dependence, and drug-seeking behavior are usually more life-disrupting than the pain process itself.

Judge Bittner found that New Jersey law requires that physicians prescribe controlled substances only for legitimate medical purposes in the course of professional treatment and that physicians must take complete histories

and perform physical examinations of patients. In addition, physicians in New Jersey are required to maintain a chart on patients for whom they prescribe controlled substances for pain.

The Government's expert testified that in treating a chronic pain patient, the physician should include both positive and negative findings in a patient's chart, including information for each visit as to whether the pain is better or worse, and whether it is in the same place. Respondent's expert asserted that pain is highly subjective and the physician must rely on the patient's description of pain, family members' reports of it, and how well the patient is able to function.

Because the Government alleged that a number of Respondent's patients were drug dependent, the Government's expert listed some ''red flags'' which should alert a physician to possible drug-seeking behavior. Specifically, the Government's expert testified that drug-seeking patients may complain of symptoms that would normally lead a doctor to consider prescribing controlled substances, express symptoms that are incompatible with the purported injury, try to avoid diagnostic procedures which may show that their conditions do not warrant treatment with narcotics, ask for a controlled substance by name on a first visit, visit physicians some distance from the patient's residence, have a history of problems but no medical records, often have multiple accidents, multiple fractures, or complain of injuring themselves at home or at work, insist on a drug of choice, lose prescriptions or medication, take more medication than directed, request more medication before the previously dispensed supply should have been exhausted, use controlled substances prescribed for others, use controlled substances in combination or with alcohol, or obtain controlled substance prescriptions from multiple physicians or have prescriptions filled at multiple pharmacies. The expert acknowledged however, that many doctors ignore these ''red flags.''

At the hearing in this matter, there was extensive testimony and documentary evidence presented regarding Respondent's treatment of 18 patients, including the prescribing of controlled substances. While the patient charts were not offered into evidence, various witnesses, including Respondent and the Government's expert, used the charts while testifying. In addition, Respondent prepared summaries of his patient records which were admitted into evidence. Further, two affidavits by Respondent in 1990, Respondent's 1991 testimony in the Medical Board's Preliminary Evaluation Committee hearing, the state investigator's 1991 report, and the state administrative law judge's opinion were admitted into evidence without objection. Respondent argues that the Government expert's reports should not be relied upon because the underlying patient records were missing. Judge Bittner rejected this argument noting ''that hearsay is admissible, that [the expert's] reports were referenced in a Government prehearing statement filed in January 1996, and that Respondent had had a substantial opportunity to raise any questions he had about the records on which the report was based.'' The Acting Deputy Administrator agrees with Judge Bittner and also notes that the reports were properly admitted into evidence at the hearing because Respondent's objections to the reports being received into evidence were not based upon the lace of underlying patient records.

In her Opinion and Recommended Ruling, Findings of Fact, Conclusions of Law and Decision, Judge Bittner went into great detail regarding the medical problems and treatment, including the prescribing of controlled substances, of the patients at issue in these proceedings. Since the Acting Deputy Administrator is adopting Judge Bittner's findings of fact in their entirety, there is no need for him to reiterate them. However, the Acting Deputy Administrator makes the following general findings regarding Respondent's treatment of the patients at issue.

Respondent treat R.C. over a period of approximately eight years. Respondent initially saw R.C. for shoulder and elbow pain following a motorcycle accident. On a number of occasions, Respondent performed surgery on R.C.'s shoulder and ring finger where he removed a benign tumor. Throughout the years, R.C. continued to complain of shoulder and finger pain. At various times, Respondent prescribed R.C. Percocet, Talwin, Darvon and Tylenol with codeine #3. For example, between January 2 and January 30, 1985, Respondent prescribed R.C. 335 dosage units of Talwin, and during February 1986, he prescribed 290 dosage units.

A note in the patient file dated August 30, 1982, stated, ''give no more Darvon.'' Another note in R.C.'s patient file dated May 21, 1985, said, ''This is the very last Rx—make it last. Follow exactly as written. If he abuses this one—he's finished with us. complaints from drug store that entire family does narcotic drug [sic].'' However, Respondent continued to prescribe Talwin to R.C., because according to Respondent, R.C. re-injured himself. In September 1986, R.C. sought another prescription from Respondent claiming that his wife washed his pants with the 60 Talwin in them that had been prescribed the day before. In a letter to R.C. dated October 9, 1986, Respondent advised R.C. that ''I am aware of your desire to have more Talwin tablets. It has been brought to my attention by many people, including my secretary, pharmacist and the emergency staff at St. Clare's Hospital that you have grossly abused this drug.'' Respondent further stated that ''to protect my own medical license and to maintain good relations with other doctors and nurses, I have to stop giving you this drug and any other drugs of comparable strength. You certainly have no reason to need this drug anymore anyway. It would be reasonable for you to take lesser medications from time to time, such as Darvocet or Tylenol with codeine: if you wish, I can give you a prescription for those. You will have to obtain Talwin elsewhere.'' Nonetheless, Respondent continued to prescribe R.C. Talwin throughout 1987 following continuing complaints of shoulder pain. In September 1988, Respondent issued R.C. a duplicate prescription after R.C. claimed that he had lost a prescription.

Before Judge Bittner, Respondent testified that although he did not recognize at the time that he was issuing prescriptions that R.C. had a drug problem, he would recognize it now. Respondent further testified that he believed R.C.'s pain warranted the prescribed medications, but that ''I shouldn't have done it. I should have been tougher.''

Respondent treated M.C. from September 1986 to June 1989. Initially, Respondent treated M.C. for back pain and headache resulting from a myelogram. Throughout the years, Respondent treated M.C. following several falls and car accidents for pain down her leg, cervical radiculopathy, and back and shoulder pain. He regularly prescribed M.C. Demerol for pain, Halcion for sleep, and Restoril as a muscle relaxer and for pain. According to Respondent, only Demerol helped M.C.'s pain. Respondent also gave M.C. anti-inflammatories, had her undergo physical therapy and traction, and recommended exercise to strengthen her muscles. Notes in M.C.'s patient file indicated that M.C. sometimes telephoned Respondent requesting prescriptions for pain medication and that pharmacies had called Respondent advising that M.C. was not following the directions on prescriptions and she was attempting to obtain refills of the prescriptions early.

At the hearing before Judge Bittner, Respondent indicated that his prescribing to M.C. helped her, but it also subjected her to possible danger.

Respondent treated patient S.D. from March 28, 1985 through June 30, 1988. Initially, Respondent treated S.D. for chronic low back pain from an old surgery and he and his partner aspirated the site. In 1985, S.D. fractured her ankle and she had surgery to remove scar tissue. S.D. was hospitalized in 1986 for low back pain and in November 1986, she had surgery to remove bone chips. Between July 11, 1985 and June 6, 1988, Respondent prescribed S.D. 240 Demerol, 430 Percodan, 50 Seconal, 475 Percocet, 1,387 Tylenol No. 4, 177 Nembutal, and 260 Tylenol No. 3. Respondent indicated that S.D. had a threshold for pain and that only the drugs prescribed ever helped her. A note in S.D.'s patient file dated August 27, 1987, indicated that S.D. was hospitalized for a drug overdose and that a pharmacy reported that it would no longer serve S.D. since she had seen every doctor in the area in an effort to obtain drugs. Four days after this note was written, Respondent issued S.D. a prescription for Tylenol No. 4

The Government's expert testified that he considered Respondent's prescribing to S.D. ''egregious'' and that it ''jeopardized certainly the welfare and the health and the safety, and even the life of this patient.'' The expert further testified that ''this is not gullibility, this is total irresponsibility in the prescribing of controlled dangerous substances.'' Respondent stated that he ''tried to act in as responsible a way as possible,'' that in the last months he saw her, S.D. asked for less medication, and that he had given her ''a hard time'' with respect to Demerol. Respondent further testified that he was concerned about S.D.'s use of controlled substances because the first time he met her she told him that she needed more medication than most people to achieve the same effect, but that he thought she was being honest. Respondent testified that this incident ''goes to show how oblivious I was to red flags in front of me.''

According to T.K., he was Respondent's patient from 1979 until January 1993. Respondent diagnosed T.K. in 1981 with a complicated form of Osgood-Schlatter's disease which causes inflammation and pain. In addition, T.K. had knee operations in 1983 and 1985, and was treated by Respondent at various times for tennis elbow, gout and tendonitis in the left forearm. Respondent regularly prescribed T.K. both Tylenol with codeine and Doriden without always noting it in the patient chart, and sometimes without seeing the patient. The Government's expert testified that there is no medical justification for prescribing Tylenol with codeine and glutethimide (the generic name for Doriden) in combination. The combination of these drugs is commonly abused because it creates a heroin-like effect. In fact, in 1984, the Medical Board sent a newsletter to all physicians which indicated that barring unusual circumstances there was no legitimate medical indication for prescribing a combination of glutethimide and codeine. Respondent testified that he did not recall receiving this newsletter. After the 1991 hearing before the Preliminary Evaluation Committee of the Medical Board, Respondent continued to prescribe both of these drugs to T.K. T.K. told the state investigator that ''I never felt that the doctor acted in anything but good faith.''

The Government's expert stated that Respondent issued T.K. new prescriptions for Tylenol with codeine before the supply dispensed pursuant to previous prescriptions should have been exhausted. The expert opined that Respondent's prescribing of controlled substances to T.K. was not for a legitimate medical purpose because the prescribed medications were not compatible with the diagnosis of what was wrong with the patient.

Respondent testified that he prescribed Doriden to T.K. because he had a chronic sleep disorder, and that other physicians had prescribed T.K. the drug. He further stated that he never told T.K. to take the Tylenol No. 3 and Doriden together.

G.K. first saw Respondent's partner in January 1990 suffering from back spasms and was prescribed Dilaudid. Respondent than began treating him approximately one year later for chronic back pain. Respondent regularly prescribed G.K. Dilaudid, often issuing a new prescription before the previous one should have run out, and often not noting the prescription in the patient chart. On one occasion, Respondent issued G.K. a new prescription after G.K. represented that he had lost a prescription. The pharmacy reviews revealed that Respondent postdated Dilaudid prescriptions for G.K. on several occasions. There were notes in the file stating that Respondent would not issue any more Dilaudid prescriptions to G.K., yet Respondent continued to do so.

The Government's expert concluded that Respondent prescribed one of the most potent narcotics to G.K. notwithstanding G.K.'s obvious drug-seeking behavior. Respondent testified that G.K. needed Dilaudid for pain and especially to sleep, or else he could not go to work. He further testified that G.K. would improve for a period of time but then would have setbacks. In retrospect, Respondent through that he was lenient with G.K. and that G.K. was a drug-seeking patient.

D.K. initially saw Respondent in August 1982, for injuries that he had sustained in a car accident that had occurred several months earlier. D.K. was a patient of Respondent's for over ten years. He was treated for injuries sustained in five car accidents and other types of accidents. During the course of his treatment, D.K. had two low back surgeries and ultimately used a cane to walk because his knees frequently buckled. According to Respondent, D.K. was the sole support for his three children, so he needed pain medication to be able to keep working. After anti-inflammatory medications did not work, Respondent prescribed D.K. Percodan. Throughout D.K.'s treatment, Respondent regularly prescribed, Tylenol No. 3, Vicodin and/or Percodan for pain, and sometimes prescribed Restoril for sleep and Valium for muscle spasms.

On several occasions, Respondent's records indicated that he intended to either diminish or cease prescribing Vicodin and Percodan to D.K. In a November 1990 affidavit, Respondent stated that ''each time [D.K.] was just about ready to get off habit-forming medicine, that another accident would occur.'' Respondent further stated that he wanted D.K. to go to another physician who might be better at getting him off of all medicine, but that ''I have no evidence of [D.K.] ever abusing medications that I gave him; it was my belief they were so that he could go to work.'' However, Respondent nonetheless continued to prescribe controlled substances after this affidavit.

The Government's expert testified that prescribing two narcotics simultaneously should be intermittent, and not done on a regular basis like Respondent did. The expert further testified that it was his opinion that there was no valid medical purpose for Respondent's prescribing to D.K. in the types and quantities of controlled substances that he did. He emphasized that a physician loses control when he prescribes a large quantity of controlled substances with refills.

Respondent testified that it never occurred to him that D.K.'s accidents may have been related to his use of controlled substances. Respondent further testified that D.K. was one of the

patients he felt he had not handled properly and that he should have been more reluctant to prescribe controlled substances to him.

Respondent began treating D.K.M. following a car accident in 1982. He diagnosed her as having a cervical sprain with radiculopathy and prescribed Talwin and exercises. When the Talwin did not appear to be working, Respondent prescribed D.K.M. Percodan. Over the next ten years, D.K.M. was involved in approximately five more car accidents with some requiring emergency room treatment. She was assaulted by patients during her work as a nurse and by her spouse on several occasions. In addition, she was injured lifting a heavy patient at work, her knees buckled several times causing her to fall, and she broke her ankle following a fall off a truck and later sprained the same ankle. During his treatment of D.K.M., Respondent regularly prescribed large quantities of various controlled substances. For example, between May 4, 1987 and January 20, 1988, Respondent prescribed D.K.M. 415 Percodan, 780 Tylenol No. 3 and 760 Vicodin. In April 1992, Respondent stated that his goal was to get D.K.M. off all medication by July 1992, yet he subsequently issued her a prescription for 100 hydrocodone with APAP with five refills.

Respondent testified that it did not occur to him that D.K.M.'s accidents may have been related to her abuse of controlled substances, but that in retrospect, her multiple injuries were ''red flags.'' The Government's expert testified that none of D.K.M.'s accidents justified prescribing her the quantity of controlled substances that Respondent did and that people who are abusing medication frequently develop falls and injuries in an attempt to obtain more drugs. In addition, D.K.M. allegedly lost prescriptions, which according to the expert is further evidence of drug-seeking behavior. The expert opined that Respondent did not prescribe for D.K.M. for a legitimate medical purpose.

Respondent began testing S.K. in April 1990. S.K. had significant motor weakness of both legs as a result of brain surgery, had severe scoliosis for which she had had a spinal fusion, and needed crutches in order to walk. She first saw Respondent complaining of neck pains and headaches. Respondent diagnosed S.K. as suffering from a cervical sprain. S.K. saw Respondent periodically until February 1993, suffering from continuing pain in the back, hip and groin, headaches and muscle spasms. Respondent prescribe S.K. various controlled substances and anti-inflammatories, and referred her for physical therapy. On two occasions, Respondent prescribed S.K. 100 Vicodin with 5 refills. Respondent testified that he prescribed S.K. such large quantities of Vicodin because he did not expect her condition to change quickly, that orthopedic conditions generally change slowly, and that pharmacists frequently encouraged him to prescribe in quantities of 100 because it is less expensive.

Between June 5, 1989 and May 21, 1990, Respondent issued N.R. 29 prescriptions (6 original prescriptions plus refills) for a total of 1,690 Tylenol No. 3. N.R. was K.D.M's elderly mother and she suffered from advanced arthritis of multiple joints. N.R. was never officially a patient of Respondent's and he did not maintain a patient record for her. Respondent stated that he prescribed for N.R. as a favor and did not charge her. However, Respondent informed D.K.M. that if N.R. wanted prescriptions or treatment in the future she would ''have to become an official patient and be worked up thoroughly with x-rays and other tests, become 'favors' cannot go on forever.'' The Government's expert testified that patent records are not only legally required but are necessary to establish a doctor-patient relationship, to determine the patient's progress or lack thereof, to determine how the patient will respond to treatment, and to protect the physician. It was the Government expert's opinion that the prescriptions issued to N.R. were not for a legitimate medical purpose.

Respondent issued prescriptions to A.R. and C.R., the couple whose house was searched and were later arrested that was discussed above. Respondent did not offer any explanation for the controlled substance prescriptions issued to A.R. Regarding C.R., Respondent first treated him in June 1991 for lumbosacral sprain with radiculopathy stemming from various accidents in 1990 and 1991. Initially, Respondent ordered an MRI, and prescribed 60 Percocet, 100 Xanax with 5 refills, and 60 Valium with 5 refills. In addition, C.R., dislocated his shoulder three times and fell causing more pain. During his treatment of C.R., Respondent prescribed large quantities of Percocet, Xanax and Valium, and prescribed Dalaudid for a period of time. For example, over a 117-day period in 1991. Respondent prescribed C.R. 950 Valium or about 8.1 pills per day. Between February 28 and March 25, 1992, Respondent prescribed C.R. 310 Percocet or about 11.5 pills per day. Respondent almost always issued new prescriptions before the supply from the previous prescription should have run out. On one occasion, Respondent issued C.R. a new prescription after C.R. indicated that he had spilled water on his Percocet causing the pills to dissolve. In addition, Respondent often postdated prescriptions for C.R.

Notes in the patient file dated July 15, 1991, indicated that a pharmacist had called because C.R. was taking more Percocet that directed; that Respondent's partner refused to give C.R. more medication; and that the patient had two herniated discs, a dislocated shoulder and a bad knee and was in great pain and wanted Percocet before his next scheduled visit. Respondent testified that he ended his doctor-patient relationship with C.R. after the local police told him that they suspected that C.R. was a drug dealer and that he cooperated in the investigation. Respondent also testified that the local prosecutor wrote to him thanking him for his help in the investigation of A.R. and C.R.

The Government's expert stated that in his opinion to a reasonable degree of medical certainty, C.R. was addicted to drugs, that Respondent maintained C.R. on controlled substances knowing that he was addicted to them, and that Respondent unlawfully attempted to detoxify a narcotic addict with narcotic medications by telling C.R. to cut down gradually on his use of these medications. The expert further stated that in his opinion, Respondent grossly deviated from the standard of care and the normal doctor-patient relationship by his prescribing to C.R. Respondent testified that he was ''lenient'' with C.R. and that C.R. was ''almost a waking red flag.''

Respondent also treated C.R.'s brother, J.R. for a little over two years beginning in March 1991. J.R. was a garbage man with chronic lumbosacral sprain and a fracture in the lower back that could by itself require surgery and that resulted in other low back ailments to take longer to heal. During the course of his treatment, J.R. also suffered a number of accidents at work which further injured his back. J.R. needed to work to support his family. Respondent regularly prescribed J.R. Percocet and at various times also prescribed him Valium, Xanax and Darvocet. Respondent also referred J.R. for physical therapy. At one point, J.R. was seen by Respondent's partner who also prescribed J.R. Percocet.

At some point during his treatment, J.R. told Respondent that he was a former addict, but felt that he needed the medication for his pain and not because he was addicted. The Government's expert stated that an x-ray report in J.R.'s file did not indicate any

condition that would cause sufficient pain to warrant treatment with Schedule II narcotics in the quantities and over the period of time that Respondent prescribed them.

A review of the prescriptions issued by Respondent to J.R. also revealed a number of postdated prescriptions. Respondent testified that he postdated prescriptions for this patient when his office would be closed on the day the prescription would normally be issued, and that he understood at the time he issued these prescriptions that a pharmacist would not dispense them until the date written on them.

The Government's expert stated that in his opinion, J.R. was addicted to drugs and that Respondent prescribed these drugs to him even though he knows or should have known that J.R. had no medical need for them. The expert further stated that Respondent did not take adequate histories or perform adequate physical examinations of this patient, that Respondent prescribed controlled substances to J.R. without seeing him, that the patient showed obvious drug-seeking behavior and that Respondent knowingly perpetuated J.R.'s addiction. Respondent testified that he did not think that he was lenient with J.R. and did not think that J.R. was a drug-seeking patient.

B.S. was a nurse who first was Respondent's partner in August 1986 after being injured at work. She became Respondent's patient in January 1987 and was hospitalized that month. Over the next six and half years B.S. underwent surgery several times. In October 1992, an MRI revealed a large lesion destroying bone in her back which was probably caused by a bone infection. She subsequently underwent a nine hour surgery. In addition, she was involved in a car accident, fell down some stairs and had a severe asthma attack, all of which exacerbated her neck and back pain.

Respondent prescribed B.S. various controlled substances over the years. On six occasions between January 7 and August 4, 1991, Respondent issued B.S. prescriptions for both Percocet and Demerol for a total of 260 Demerol and 390 Percocet. Following her last surgery, Respondent prescribed B.S. Dilaudid for approximately three and a half months. Over the years, Respondent referred B.S. to a spine specialist, a neurosurgeon, a neurologist and an infectious disease specialist.

Respondent's records revealed that Respondent reissued prescriptions for Percocet to B.S. after her house was burglarized two times, the locker room at her work was robbed, her motel room was robbed while she was on vacation, she spilled some Percocet at a ball game, and her daughter threw some of the drugs away.

The Government's expert opined that three and a half months is a long time for any patient to be routinely taking Dilaudid. The expert reported that Respondent issued prescriptions for Dilaudid to B.S. before her previous supply should have been exhausted, that Percocet and Dilaudid are not normally prescribed in combination, and that they both attach to the same receptor sites in the brain. He concluded that Respondent's prescribing to B.S. was irresponsible and a ''gross deviation from the standard of care in the practice of medicine in New Jersey, or in the United States.'' Respondent testified that he knew B.S. before he began treating her and that he thought she had personal integrity and would not be likely to divert controlled substances.

Respondent began treating C.T. Sr. in 1978 for a knee injury. Respondent treated C.T. Sr. until 1990 for various problems including chronic should pain, cervical and lumbosacral sprain suffered as a result of a car accident, impingement in the shoulder, and pain following surgery on his shoulder and arthroscopic surgery on his knee. C.T. Sr. had a number of work-related accidents and injuries and was hit by a car. During his treatment of C.T. Sr., Respondent prescribed him various controlled substances for pain. Between 1984 and 1990, Respondent issued C.T. Sr. 208 Percocet prescriptions, even issuing two on the same day, one for 21 dosage units and the other for 20. Respondent admitted that after a while, he became suspicious of C.T. Sr.

Respondent often issued C.T. Sr. controlled substance prescriptions before the supply from the previous prescription should have run out. Respondent admitted to this, but testified that he did so because patients' conditions change daily and the directions on the prescription represent the physician's ''best guess and estimate'' as to how often the patient should take the medication.

Respondent began treating C.T. Sr's wife, D.T. in 1979 for pulled muscles and tendonitis of the knee and possible phlebitis. At one point, she was hospitalized and a neurologist diagnosed her as suffering from neuromuscular derangement syndrome. At a later point, D.T. had surgery for scar tissue and thereafter, surgery for a ganglion cyst and inflamed tendons of the left wrist. Over the years, Respondent prescribed large amounts of Percocet to D.T. On one occasion, C.T. Sr. called Respondent and told him that D.T. was suffering from severe back and knee pain, and Respondent issued her a Percocet prescription. Respondent testified that now he would recognize this as ''a rather blatant attempt to try and get some Percodan out of me.''

Respondent issued D.T. prescriptions for Percocet before the supply from the previous prescription should have been exhausted, and would often issue new prescriptions after D.T. represented that she had lost a prescription. While Respondent believed that D.T. clearly had problems with her arm, he ultimately told her to go elsewhere because he was not able to cure her wrist and would not give her any more medication.

According to the Government's expert, Respondent's prescribing to D.T. was not for a legitimate medical purpose. The expert stated that ''[i]t is incomprehensible to think that this physician was not aware of the substance abuse by these patients.'' He further testified that, ''If you don't see a patient and you get asked to fill prescriptions for a patient you haven't seen, and the wife is getting the same medicine and she's fabricating and exaggerating symptoms as he is, that's pretty obvious. I mean, that's not something that you would call gullibility.''

Respondent also issued Percocet prescriptions to C.T. Sr.'s son, C.T. Jr., who was 12 years old when Respondent first began treating him. According to Respondent C.T. Jr. had had major injuries to his right hand five years before, and Respondent issued him prescriptions for flare-ups of severe pain. Respondent did not have any patient record for C.T. Jr., and Respondent indicated that C.T. Jr. was not really a patient of his, but that he issued him the prescriptions as an act of charity because the family could not afford to send C.T. Jr. to see his family physician. Respondent admitted that between July 6, 1985 and February 3, 1990, he issued C.T. Jr. 11 prescriptions for a total of 370 dosage units of Percocet. Respondent testified that although C.T. Jr. was an adolescent, he was physically large so there was no physiological difference between him and an adult with respect to prescribing pain medication.

Respondent stated that in retrospect, many of C.T. Jr.'s complaints were fabricated in order to please his parents who were addicted to Percocet. In one month Respondent prescribed to the father, mother and son a total of 369 dosage units of Percocet.

Respondent first saw E.T. in 1981 when she was hospitalized with diabetes-associated problems. He did not see her again until 1985 when her

family physician referred her to Respondent because she was suffering from intractable diabetic neuropathy and she was taking large quantities of Percodan. Respondent continued to prescribe Percodan to E.T., authorizing 227 dosage units during a five week period in 1985. Ultimately, Respondent referred E.T. back to her family physician stating in a letter that, ''Since I have an [enormous] number of Percodan patient[s] myself, I request that you take this patient back.''

A notation in E.T.'s patient file dated January 22, 1986, indicated that this was the last prescription and the patient was so advised. However Respondent issued her several more prescriptions for Percodan. On one occasion, E.T's husband called and indicated that his wife was in a lot of pain and requested that Respondent issue her a prescription for 25 Percocet to hold her until her next appointment.

The Government's expert testified that E.T. and her husband were exhibiting drug seeking behavior, and that even if E.T. had painful diabetic neuropathy, she could have been treated with non-habit forming medications. The expert did not believe that there was a legitimate medical purpose for the drugs Respondent prescribed for E.T. because Respondent was treating this patient for a condition out of his area of expertise and he was ''simply prescribing controlled drugs for another doctor's patient.''

Respondent began treating E.T.'s husband, J.T. in 1980 for multiple injuries sustained in a car accident in 1977 and for which J.T. had undergone three surgeries. When Respondent first saw J.T. he had an unhealed and draining fracture of his left leg and it was crooked so that he had been unable to walk for three and a half years. Respondent performed several operations on J.T.'s leg and prescribed J.T. mainly Percodan. As an example, Respondent prescribed J.T. 735 dosage units of Percodan between April 1 and August 26, 1982.

Subsequently, J.T. fell, rupturing his Achilles tendon, and later sprained his left ankle and had surgery in New York. By 1986, J.T.'s left leg was worse and it was ultimately amputated in 1987 in New York. The doctors in New York prescribed J.T. MS Contin, so Respondent began prescribing him the drug. Thereafter, Respondent performed a procedure on J.T.'s leg since the wound was still draining. In addition, J.T. experienced severe phantom limb pain. Respondent continued to prescribe J.T. large quantities of MS Contin, even after J.T. appeared to be improving. Respondent referred J.T. to a detoxification center, but J.T. would not go for fear of losing his job. At some point later, J.T. was in a car accident where he injured both knees, his ribs, neck and lower back. Respondent referred J.T. to a neurosurgeon.

Notes in J.T.'s patient file indicated that a neurologist recommended that J.T. be detoxified from MS Contin and a pharmacist had reported that J.T. was using Valium twice as fast as he should. Respondent nonetheless continued to prescribe J.T. MS Contin, Restoril, Percocet and Valium.

The Government's expert noted that J.T. called Respondent's office to obtain prescriptions, sometimes stating that he had lost a prescription or requesting postdated prescriptions. The expert state that ''[t]hese tactics are such an obvious attempt of getting and using more pills than prescribed and it clearly points to the situation where the patient now is in control of the doctor rather than vice versa. * * * I do not believe, in this day and age, that any physician would be that blindfolded to the obvious drugs-seeking behavior.'' The expert noted that J.T. displayed the classic signs of a drug abuser, and concluded that Respondent's prescribing of the types and quantities of controlled substances to J.T. was not for a legitimate medical purpose.

Respondent's expert did not testify in the proceedings before Judge Bittner, but his testimony before the Medical Board was admitted into evidence. The expert emphasized that there has ''never been promulgated clear-cut standards of care in the management of patients with chronic pain who require long-term narcotic medication,'' and that there is no law or regulation specifying how much narcotic medication a chronic pain patient may be prescribed. The expert testified that he was impressed by the ''medical and surgical complexity,'' of the patients at issue in that proceeding and that he concluded that Respondent's prescribing ''mostly does not deviate from the accepted [medical] standards,'' noting that Respondent documented reasons for his prescriptions, he followed the patients carefully over a long period of time and knew the cases well, there was no information of progressive deterioration related to the prescriptions during the time of the prescriptions, and that in all but a few cases, Respondent kept ''fairly decent records.'' The expert testified that the only patient for whom Respondent's prescribing deviated from standard medical care was T.K.

Although not required by the Medical Board, following the suspension of his medical license, Respondent underwent rehabilitative training in late 1993 or 1994 with a physician who is part of the Academy of Medicine of New Jersey, the educational arm of the New Jersey Medical Society. This physician is board certified in psychiatry, psychotherapy, and preventive medicine, and certified in addiction medicine.

The training consisted of six or seven two-hour sessions over a four to six month period during which Respondent and the physician engaged in role playing exercises designed to help with the handling of drug seeking patients. They also reviewed the potency of medications, pain management techniques, how to obtain assistance in dealing with problem patients, and how to recognize ''red flags'' to warn of drug seeking patients. Respondent was given homework assignments and also read material outside of his sessions with the physician. Respondent passed an examination given at the conclusion of the training.

Respondent testified that the course made him better able to handle controlled substances and to handle drug-seeking patients. He further testified that as a result of the course. ''I came to believe that I was an easy mark for patients. I was too believing in everything they said. I didn't try hard enough to decrease potentially habit-forming drugs in a number of cases. * * * Although, at the time I felt I was doing the right thing.''

In retrospect and after his training, Respondent felt that in three or four cases, ''I over-prescribed, with good intentions, but I didn't act prudently in retrospect.'' He testified that he had become more suspicious than he used to be and that he believed that it is not necessarily incorrect to use controlled substances to treat chronic pain but that physicians have more alternatives to controlled substances in treating these patients now.

At the hearing, Respondent acknowledged that he sometimes prescribed additional controlled substances to patients before their previous supply should have been exhausted, but testified that if a patient used up a supply of medication before it should have been exhausted if the directions for use were followed, then he would conclude that the patient had more pain than he thought. Respondent also testified that prescribing two narcotics simultaneously is justified when a physician thinks that the patient can be managed on the weaker drug but prescribes some of the stronger one in case the weaker one does not work. Prescribing the drugs at the same time saves the patient another trip to the physician's office if the weaker

medication does not provide relief. Respondent further testified that the issue of prescribing more than one controlled substance at a time ''comes down to do you trust your patient. And I trusted my patient * * * I was too gullible in certain situations.''

In this proceeding, Respondent was asked about his 1991 testimony before the Preliminary Evaluation Committee that, ''I'm a lot stricter and tougher about this than I was. I mean, as I look back I realize that I was really too lenient with all these people.'' Respondent testified at the hearing before Judge Bittner that he ''was more aware of red flags,'' that ''it was an evolving process,'' and that ''I am more aware today than I was last year.''

Respondent offered into evidence affidavits from colleagues who stated that Respondent's medical treatment of his patients was professional, that he has demonstrated concern and compassion for his patients, that he is highly regarded, that he conducts himself in the best interests of his patients, and one stated that he had never observed Respondent engaging in any unethical conduct. An affidavit from a patient indicated that Respondent was dedicated to treating and improving her condition.

In addition, Respondent offered into evidence the testimony of a colleague at the 1993 Medical Board hearing. The colleague testified that Respondent had an excellent reputation within the orthopedic and general medical communities and that Respondent's standard of care was above reproach. The colleague testified that in his opinion, Respondent ''has exercised appropriate care and concern and appropriate management of [the patients at issue] prior to prescribing any given medication.'' He further stated that there could be reasonable differences of opinion among orthopedists as to the type and amount of medication to prescribe to a given patient. The colleague did testify however that he would not prescribe more than a four-week supply of Schedule II or III medication at one time and that he would ''definitely'' not prescribe narcotics for a patient without maintaining a patient record.

Pursuant to 21 U.S.C. 823(f), the Deputy Administrator may revoke a DEA Certificate of Registration and deny any application for such registration, if he determines that the continued registration would be inconsistent with the public interest. Section 823(f) requires that the following factors be considered:

(1) The recommendation of the appropriate state licensing board or professional disciplinary authority.

(2) The applicant's experience in dispensing, or conducting research with respect to controlled substances.

(3) The applicant's conviction record under federal or state laws relating to the manufacture, distribution, or dispensing of controlled substances.

(4) Compliance with applicable state, federal, or local laws relating to controlled substances.

(5) Such other conduct which may threaten the public health or safety.

These factors are to be considered in the disjunctive; the Deputy Administrator may rely on any one or a combination of factors and may give each factor the weight he deems appropriate in determining whether a registration should be revoked or an application for registration denied. See Henry J. Schwarz, Jr., M.D., 54 FR 16, 422 (1989).

As to factor one, it is undisputed that Respondent's New Jersey medical license has been in effect since August 1994, and in October 1994, the Medical Board permitted Respondent to resume prescribing controlled substances, if and when he is issued a DEA registration, subject to various restrictions for at least one year. The restrictions imposed by the Medical Board include that Respondent must maintain a log of his prescribing and dispensing; he may not prescribe or dispense more than a 14-day supply at one time to a patient; and he must refer a patient to a pain management specialist for a second opinion prior to completion of 90 days of prescribing or dispensing to the patient.

Respondent argues that DEA is bound by the Medical Board's findings. The Acting Deputy Administrator rejects this argument since the recommendation of the state licensing authority is only one of the factors to be considered in determining whether Respondent's registration would be in the public interest. Like Judge Bittner states, ''[i]nasmuch as state authority to handle controlled substances is a necessary but not sufficient condition for DEA registration * * * this factor is not dispositive.'' However, the Acting Deputy Administrator does find it significant that after reviewing Respondent's treatment of the patients at issue, the Medical Board reinstated Respondent's license to practice medicine and his ability to handle controlled substances, albeit with restrictions.

Regarding Respondent's experience in dispensing controlled substances, the Government does not dispute that during Respondent's 20 years in practice he has seen over 15,000 patients. At issue in this proceeding is Respondent's controlled substance prescribing to 18 patients.

Judge Bittner concluded that Respondent issued controlled substance prescriptions to two individuals for no legitimate medical purpose. She found that Respondent did not offer any explanation for the fact that between August 22 and September 23, 1992, he prescribed 480 Vicodin to A.R. Judge Bittner stated that ''[w]hen a physician prescribes such an unusually large quantity of a controlled substance, it is reasonable to require him to show that the prescribing was for a legitimate medical purpose.'' Since Respondent did not provide any justification for these prescriptions, Judge Bittner inferred that they were not issued for a legitimate medical purpose. The Acting Deputy Administrator disagrees with Judge Bittner's conclusion. The burden of proof in these proceedings is on the Government, and the mere fact that Respondent prescribed A.R. a large quantity of a controlled substance in and of itself does not warrant the conclusion that there was no legitimate medical purpose for the drugs.

Judge Bittner also found that there was no legitimate medical purpose for the Tylenol with codeine and gluethimide prescriptions Respondent issued to T.K. for approximately nine years. The Acting Deputy Administrator agrees with Judge Bittner's conclusion. In 1984, all New Jersey physicians were warned by a newsletter that ''[b]arring unusual circumstances, there would be no legitimate medical indication for the prescribing of the combination of Glutethimide and Codeine.'' In addition, the Government's expert noted in his report that ''there is no medical rationale for the use of this combination.''

Regarding Respondent's prescribing to the other patients at issue, Judge Bittner found numerous examples of questionable conduct. Respondent prescribed various patients other combinations of controlled substances either simultaneously or within a short period of time. He issued prescriptions to individuals before the quantity obtained pursuant to previous prescriptions should have been exhausted. Respondent postdated prescriptions, and issued prescriptions despite expressions of concern by physicians, pharmacists or others about the quantity of medication the patients were obtaining. Respondent continued to prescribe controlled substances to patients even after he had indicated that he would stop issuing them

prescriptions. He ignored signs that patients were abusing the controlled substances prescribed or were at serious risk of doing so. For example, he continued prescribing to one individual even after learning that the individual had been altering earlier prescriptions. He also ignored the possibility that the multiple accidents and injuries reported by the patients could be drug-seeking behavior.

Judge Bittner also found that ''Respondent failed to appropriately document his treatment and prescribing to a number of patients.'' Significantly, Respondent did not maintain any patient file whatsoever on two of the patients.

Judge Bittner further found that ''Respondent's treatment of various patients also shows a regrettable lack of responsibility * * *.'' As examples, she notes that Respondent prescribed large quantities of certain drugs despite recommendations in the Physician's Desk Reference that they were not to be used for more than a few days; he continued to prescribe controlled substances to an individual after she overdosed; and he prescribed narcotics to an individual after learning that the individual had unsuccessfully attempted detoxification and was severely depressed.

The Acting Deputy Administrator agrees that Respondent's prescribing to these patients appears to be highly questionable. However, the Acting Deputy Administrator is uncomfortable saying that Respondent's prescribing of large quantities of controlled substances or issuing new prescriptions before the previous supply should have been exhausted or prescribing combinations of controlled substances was improper given that these patients apparently had medical problems that caused chronic pain and warranted treatment.

But, Respondent himself admits that he was too lenient regarding the treatment of some of the patients. In addition, the Medical Board, through its adoption of the state administrative law judge's findings, found serious problems with Respondent's prescribing of controlled substances. As the administrative law judge noted, ''* * * the patients in question had, to varying degrees, serious problems which no doubt may have resulted in legitimate pain complaints. The question, however, is one of degree. Respondent ignored obvious dangers of dependency, as evidenced in many instances by what were referred to by petitioner's witnesses as clear ''red flags'' which should have made him suspect. In addition, it is apparent * * * that [R]espondent did not have control of the dispensing of [controlled substances], but prescribed largely in response to communications and complaints from the patients in question, who frequently requested specific medications and dosages of medications, as well as specific dates for prescriptions.'' Further, the Medical Board noted in its 1994 order, ''while we do not condone the manner in which Dr. Caragine prescribed controlled dangerous substances to the patients who were the subject of this action, we do note that the vast majority of those patients were individuals with significant medical problems or illnesses requiring pain management.''

The Acting Deputy Administrator also notes that the Government's expert, in his 1993 report, stated that

> At one point a doctor may be naive or even gullible but when patients continuously call the office for refills, lose their prescriptions, receive pharmacist's reports about refilling prescriptions frequently and knowledge of an individual's addiction by virtue of the fact that the doctor decided to wean them from the medication followed by continuous prescriptions, even after overdose situations, with more [controlled substances], can no longer be brushed aside as gullibility.

Therefore, the Acting Deputy Administrator concludes that even though the patients at issue are only a small portion of Respondent's patient population, his prescribing of controlled substances to these individuals raises serious concerns regarding ability to responsibly handle controlled substances in the future.

As to factor three, there is no evidence that Respondent has ever been convicted of charges under state or Federal laws relating to the manufacture, distribution or dispensing of controlled substances.

Regarding factor four, pursuant to 21 CFR 1306.04, prescriptions for controlled substances may be issued only ''for a legitimate medical purpose by an individual practitioner acting in the usual course of his professional practice.'' As discussed above, the Acting Deputy Administrator finds that the prescriptions to T.K. for Tylenol with codeine and glutethimide were not issued for a legitimate medical purpose. Additionally, New Jersey law requires that physicians maintain patient charts for individuals that are prescribed controlled substances. It is undisputed that Respondent failed to maintain such charts for N.R. and C.T. Jr. Also, it is undisputed that Respondent postdated controlled substances prescriptions for various patients in violation of 21 CFR 1306.05, which requires that''[a]ll prescriptions for controlled substances shall be dated as of, and signed on, the day when issued. * * *''

The Government alleged that Respondent detoxified patients without being registered to do so. However, the Acting Deputy Administrator agrees with Judge Bittner that the record does not support a finding that Respondent violated DEA regulations by conducting detoxification treatment without being registered to do so.

As to factor five, Judge Bittner found ''Respondent's current assertions that he will be more responsible in the future are entitled to little weight.'' She noted that Respondent continued his questionable prescribing even after being interviewed in 1990 by a state investigator and after telling the Medical Board's Preliminary Evaluation Committee in 1991 that ''I'm very careful. I'm not so easy to get drugs out of like I use[d] to be,'' and that ''I want the board to know that I really made an effort to clean up my act and not be permissive.'' The Acting Deputy Administrator disagrees with Judge Bittner. In 1994, on his own initiative, Respondent underwent training to better equip himself to handle drug-seeking patients and to more responsibly handle controlled substances. Additionally at the hearing in this matter, when asked about his assurances at the 1991 hearing, Respondent testified that ''I'm a lot stricter and tougher about this than I was. I mean, as I look back I realize that I was really too lenient with all these people.'' He further testified that he ''was more aware of red flags,'' that ''it was an evolving process,'' and that ''I am more aware today than I was last year.''

Judge Bittner concluded that even though ''the patients at issue here are a small fraction of the total number he treated over a twenty-year period[,] * * * that most of these patients suffered chronic pain and that it was difficult to find appropriate treatment for many of them'' Respondent's prescribing ''is most charitably described as irresponsible.'' She further concluded that ''[n]otwithstanding Respondent's testimony that he will be more responsible in the future and that he is rehabilitated by his training * * *, it is clear that Respondent does not yet acknowledge his misprescribing.'' Therefore, Judge Bittner found ''that a preponderance of the credible evidence in this record establishes that Respondent's registration would not be in the public interest'' and she recommended that his application be denied.

Respondent filed exceptions to Judge Bittner's Opinion and Recommended Ruling, and the Government filed a

response to Respondent's exceptions. The Deputy Administrator has carefully considered both of these filings in rendering his decision in this matter. First, several of Respondent's exceptions have already been addressed in this final order such as his argument that the Medical Board's ruling is binding on DEA, that the Government did not provide the records relied upon by its expert in rendering his opinion, and that Judge Bittner improperly found that Respondent prescribed controlled substances to A.R. for no legitimate medical purpose.

Respondent also argued that Judge Bittner failed to consider Respondent's innocent unawareness of errors in judgment; the Medical Board's finding that Respondent had no improper motive in prescribing for his patients; the lack of evidence that Respondent knowingly and intentionally prescribed controlled substances to addicted persons or persons involved in illicit activity; the lack of evidence of any complaints about Respondent's prescriptive practices to any government agency by physicians, patients or staff; and the lack of evidence demonstrating that Respondent sold any drugs or prescriptions to anyone. The Acting Deputy Administrator concludes it is not necessary to prove that any of the above circumstances exist before a registration can be revoked or an application denied. Just because misconduct is unintentional, innocent or devoid of improper motivation, does not preclude revocation or denial. Careless or negligent handling of controlled substances creates the opportunity for diversion and could justify revocation or denial.

Respondent argued that Judge Bittner failed to give proper weight to his previous treatment of patients other than those at issue in this proceeding, to the medical problems of the patients at issue, and to the fact that he voluntarily underwent training. Like Judge Bittner, the Acting Deputy Administrator has considered these facts and has given them the weight he deems appropriate in rendering his decision in this matter. Respondent further argued that Judge Bittner failed to even consider that he cooperated with state officials in their investigation of his patients. The Acting Deputy Administrator has considered Respondent's cooperation, however he does not deem it significant in determining whether Respondent can be trusted to responsibly handle controlled substances.

Respondent also argued that the Government expert did not speak with or examine the patients at issue, nor did he speak with Respondent, his partner or office staff before submitting his report. The Acting Deputy Administrator finds that the expert could render an opinion without taking the steps outlined above, however in rendering his decision in this matter, the Acting Deputy Administrator has taken into consideration what was relied upon by the expert.

Respondent further argues that Judge Bittner failed to find in Respondent's favor regarding specific points when ''DEA presented no evidence and the Respondent presented detailed, uncontradicted evidence.'' The Acting Deputy Administrator is unable to address this exception since Respondent did not provide any specific examples where this may have occurred.

Respondent also contends that the Government did not establish that he knew or should have known that the combination of Tylenol with codeine and glutethimide is highly abused and that Judge Bittner was in error in finding that Respondent prescribed these drugs to be taken in combination. Respondent asserts that he prescribed these drugs separately and never told the patients to take them in combination. The Acting Deputy Administrator finds that it is incumbent upon a DEA registrant to keep abreast of the illicit uses of controlled substances. Here, as early as 1984, physicians in New Jersey were notified that barring unusual circumstances, there was no legitimate medical purpose for these drugs in combination. In addition, the Acting Deputy Administrator finds that it is of little significance that Respondent never actually told the patients to take the drugs together. By prescribing these drugs at the same time, he created the opportunity for abuse once the patient left his office.

Respondent argues that Judge Bittner failed to consider a New Jersey regulation that was in place at the time of the prescribing at issue which addresses the prescribing of narcotic drugs for persons suffering from intractable pain. This regulation suggested that narcotics should be used after no other relief or cure can be found, that practitioners should be alert to new or alternative forms of treatment that may be less addictive, and that the practitioner should periodically either cease the medication, taper the dosage or try other medications in an effort to reduce the propensity for addiction. The Acting Deputy Administrator finds that Respondent's reliance on this regulation to justify his prescribing seems to be misplaced since Respondent did not appear to follow the suggestions set forth.

Finally, Respondent argues that Judge Bittner failed to consider that the issuance of a registration limited to hospital patients only would be in the public interest and whether the Medical Board's restrictions would reduce or eliminate any potentially abusive prescriptive practices. These exceptions have been considered by the Acting Deputy Administrator and will be discussed below.

The Acting Deputy Administrator is extremely concerned by Respondent's prescribing to the 18 patients at issue up until his medical license was suspended in 1993. While there may have been no improper motivation, Respondent ignored many ''red flags'' that should have alerted him to the possible abuse of controlled substances.

But, the Acting Deputy Administrator notes that the patients at issue make up a very small percentage of Respondent's total patient population and that these patients had legitimate medical problems that warranted some form of treatment. In addition, the Acting Deputy Administrator recognizes that the events at issue occurred a number of years ago, and while passage of time alone is not dispositive, it is a consideration in assessing whether Respondent's registration would be inconsistent with the public interest. See *Norman Alpert, M.D.,* 58 FR 67,420 (1993). The Acting Deputy Administrator notes that following his state suspension, Respondent on his own initiative, underwent rehabilitative training to become better educated in controlled substances and how to deal with drug-seeking patients, and the restrictions imposed by the Medical Board on Respondent's handling of controlled substances will limit the chance for improper prescribing. Therefore, the Acting Deputy Administrator concludes that it is not in the public interest to deny Respondent's application for resignation.

However, given the Acting Deputy Administrator's concerns about Respondent's past prescribing to the patients at issue, a restricted registration is warranted. This will allow Respondent to demonstrate that he can responsibly handle controlled substances in his medical practice, yet simultaneously protect the public by providing a mechanism for rapid detection of any improper activity related to controlled substances. See *Steven M. Gardner, M.D.,* Docket No. 85–26, 51 FR 12,576 (1986). For at least one year following the issuance of the DEA Certificate of Registration, Respondent shall be limited to handling

controlled substances for hospital in-patients only. This does not include emergency room handling of controlled substances since some of the prescriptions for the patients at issue in this proceeding were issued when they were seen by Respondent in a hospital emergency room. During that year, Respondent shall take a course in the proper handling of controlled substances. The Acting Deputy Administrator finds this necessary since Respondent received the training discussed in this proceeding approximately four years ago. At the conclusion of one year, or upon the submission to the Special Agent in Charge of the DEA Newark Field Division, or his designee, of evidence of completion of the course, whichever is later, Respondent can then handle controlled substances outside of the hospital in-patient setting with the restrictions ordered by the Medical Board. However, since the Medical Board's restrictions on Respondent's prescribing of controlled substances are to be in place for at least one year after he received his DEA registration, they are really of no consequence because Respondent is limited by DEA to only handling controlled substances for hospital in-patients. Therefore, for two years after Respondent is allowed to handle controlled substances outside of the hospital his registration shall be subject to the following conditions:

(1) Respondent shall maintain a log of his prescribing, administering and dispensing of controlled substances and shall make this log available to DEA personnel upon request. At a minimum, the log shall include the name of the patient, the date the controlled substance is prescribed, administered or dispensed, and the name, dosage and quantity of the controlled substance prescribed, administered or dispensed.

(2) Respondent may not prescribe or dispense more than a 14-day supply of a controlled substance at one time to a patient.

(3) Respondent must refer a patient to a pain management specialist for a second opinion prior to completion of 90 days of prescribing or dispensing to the patient.

According, the Acting Deputy Administrator of the Drug Enforcement Administration, pursuant to the authority vested in him by 21 U.S.C. 823 and 824 and 28 CFR 0.100(b) and 0.104, hereby orders that the application for registration submitted by Paul J. Caragine, Jr., M.D., be, and it hereby is granted subject to the above described restrictions. This order is effective no later than October 28, 1998.

Dated: September 21, 1998.

Donnie R. Marshall,

Acting Deputy Administrator.

[FR Doc. 98–25827 Filed 9–28–98; 8:45 am]

BILLING CODE 4410–09–M

DEPARTMENT OF JUSTICE

Immigration and Naturalization Service

[INS No. 1945–98; AG Order No. 2179–98]

RIN 1115—AE 26

Extension of Designation of Somalia Under Temporary Protected Status Program

AGENCY: Immigration and Naturalization Service, Justice.

ACTION: Notice.

SUMMARY: This notice extends, until September 17, 1999, the Attorney General's designation of Somalia under the Temporary Protected Status (TPS) program provided for in section 244 of the Immigration and Nationality Act, as amended (Act). Accordingly, eligible aliens who are nationals of Somalia (or who have no nationality and who last habitually resided in Somalia) may re-register for TPS and are eligible for an extension of employment authorization. This re-registration is limited to persons who registered for the initial period of TPS, which ended on September 16, 1992.

EFFECTIVE DATE: This extension of designation is effective September 18, 1998, and will remain in effect until September 17, 1999. The re-registration procedures become effective September 28, 1998, and will remain in effect until October 27, 1998.

FOR FURTHER INFORMATION CONTACT: George Raftery, Residence and Status Branch, Adjudications, Immigration and Naturalization Service, Room 3214, 425 I Street, NW., Washington, DC 20536, telephone (202) 305–3199.

SUPPLEMENTARY INFORMATION:

Background

Subsection 308(b)(7) of the Illegal Immigration Reform and Immigrant Responsibility Act, Pub. L. 104–208, dated September 30, 1996, redesignated section 244A of the Act as section 244. Under this section, the Attorney General continues to be authorized to grant TPS to eligible aliens who are nationals of a foreign state designated by the Attorney General (or who have no nationality and last habitually resided in that state). The Attorney General may designate a state upon finding that the state is experiencing ongoing armed conflict, environmental disaster, or certain other extraordinary and temporary conditions that prevent nationals or residents of the country from returning in safety.

On September 16, 1991, the Attorney General designated Somalia for Temporary Protected Status for a period of 12 months (56 FR 46804). The Attorney General extended the designation of Somalia under the TPS program for additional 12-month periods until September 17, 1998 (62 FR 41421).

Based on a thorough review by the Departments of State and Justice of all available evidence, the Attorney General finds that the ongoing armed conflict in Somalia continues and that, due to such armed conflict, extension of the designation of Somalia for TPS is required.

This notice extends the designation of Somalia under the Temporary Protected Status program for an additional 12 months, from September 18, 1998, to September 17, 1999, in accordance with subsections 244(b)(3)(A) and (C) of the Act. This notice also describes the procedures with which eligible aliens who are nationals of Somalia (or who have no nationality and who last habitually resided in Somalia) must comply in order to re-register for TPS.

In addition to timely re-registrations and late re-registrations authorized by this notice's extension of Somalia's TPS designation, late initial registrations are possible under 8 CFR 244.2(f)(2) for some nationals of Somalia (or aliens having no nationality who last habitually resided in Somalia). Such late initial registrants must have been ''continuously physically present'' and have ''continuously resided'' in the United States since September 16, 1991, must have had a valid immigrant or nonimmigrant status during the original registration period or have had an application for such status pending during the original registration period, and must register no later than 30 days from the expiration of such status or the denial of the application for such status.

An application for TPS does not preclude or adversely affect an application for asylum or any other immigration benefit. Any national of Somalia (or alien having no nationality who last habitually resided in Somalia) who is otherwise eligible for TPS and has applied for, or plans to apply for, asylum, but who has not yet been granted asylum or withholding of removal may also apply for TPS.

Nationals of Somalia (or aliens having no nationality who last habitually resided in Somalia) who have been continuously physically present and have continuously resided in the United States since September 16, 1991, may

re-register for TPS within the registration period which begins on September 28, 1998, and ends on October 27, 1998. This notice concerns ''extension of TPS designation,'' not ''redesignation of TPS.'' An extension of TPS designation does not change the eligibility requirements for TPS, including the required dates of continuous residence and continuous physical presence in the United States.

Nationals of Somalia (or aliens having no nationality who last habitually resided in Somalia) may register for TPS by filing an Application for Temporary Protected Status, Form I–821, which requires a filing fee (instructions regarding the payment of fees for re-registration are contained in paragraph 5 of this notice). The Application for Temporary Protected Status, Form I–821, must always be accompanied by an Application for Employment Authorization, Form I–765, which is required for data-gathering purposes. TPS applicants who already have employment authorization, including some asylum applicants, and those who have no need for employment authorization, including minor children, need pay only the I–821 fee, although they must complete and file the I–765. In all other cases, the appropriate filing fee must accompany Form I–765, unless a properly documented fee waiver request under 8 CFR 244.20 is submitted to the Immigration and Naturalization Service.

Notice of Extension of Designation of Somalia Under the Temporary Protected Status Program

By the authority vested in me as Attorney General under section 244 of the Act (8 U.S.C. 1254), and pursuant to subsections 244(b)(3) (A) and (C) of the Act, I had consultations with the appropriate agencies of the Government concerning whether the conditions under which Somalia was designated for TPS continue to exist. As a result of those consultations, I determine that the conditions for the original designation of Temporary Protected Status for Somalia continue to be met. Accordingly, it is ordered as follows:

(1) The designation of Somalia under subsection 244(b) of the Act is extended for an additional 12-month period for September 18, 1998, to September 17, 1999.

(2) I estimate that there are approximately 350 nationals of Somalia (and aliens having no nationality who last habitually resided in Somalia) who have been granted Temporary Protected Status and who are eligible for re-registration.

(3) In order to maintain current registration for Temporary Protected Status, a national of Somalia (or an alien having no nationality who last habitually resided in Somalia) who received a grant of TPS during the initial period of designation, from September 16, 1991, to September 16, 1992, must comply with the re-registration requirements contained in 8 CFR 244.17, which are described in pertinent part in paragraphs (4) and (5) of this notice.

(4) A national of Somalia (or an alien having no nationality who last habitually resided in Somalia) who previously has been granted TPS and has re-registered annually must re-register by filing a new Application for Temporary Protected Status, Form I–821, along with an Application for Employment Authorization, Form I–765, within the 30-day period beginning on September 28, 1998, and ending on October 27, 1998, in order to be eligible for Temporary Protected Status during the period from September 18, 1998, until September 17, 1999. Late re-registration may be allowed when good cause is shown for a failure to timely re-register pursuant to 8 CFR 244.17(c).

(5) There is no fee for Form I–821 filed as part of the re-registration application. A Form I–765 must be filed with the Form I–821. If the alien requests employment authorization for the extension period, the fee prescribed in 8 CFR 103.7(b)(1), currently seventy dollars ($70), or a properly documented fee waiver request pursuant to 8 CFR 244.20, must accompany the Form I–765. An alien who does not request employment authorization must nonetheless file Form I–765 along with Form I–821, but in such cases no fee will be charged.

(6) Pursuant to subsection 244(b)(3)(A) of the Act, the Attorney General will review, at least 60 days before September 17, 1999, the designation of Somalia under the TPS program to determine whether the conditions for designation continue to be met. Notice of that determination, including the basis for the determination, will be published in the **Federal Register**.

(7) Information concerning the TPS program for nationals of Somalia (and aliens having no nationality who last habitually resided in Somalia) will be available at local Immigration and Naturalization Service offices upon publication of this notice.

Dated: September 21, 1998.

Janet Reno,

Attorney General.

[FR Doc. 98–25883 Filed 9–25–98; 8:45 am]

BILLING CODE 4410–01–M

DEPARTMENT OF JUSTICE

Office of Justice Programs; Bureau of Justice Statistics

Agency Information Collection Activities: Extension of Currently Approved Collection; Comment Request

ACTION: Notice of Information Collection Under Review; (Reinstatement, with change, of previously approved collection for which approval has expired); National Survey of Indigent Defense Systems.

The Department of Justice, Bureau of Justice Statistics, has submitted the following information collection request for review and clearance in accordance with the Paperwork Reduction Act of 1994. Office of Management and Budget approval is being sought for the information collection listed below. This proposed information collection was previously published in the **Federal Register** on April 16, 1998, allowing for a 60-day public comment period.

The purpose of this notice is to allow an additional 30 days for public comment until October 28, 1998. This process is conducted in accordance with 5 CFR 1320.10.

Written comments and/or suggestions regarding the item(s) contained in this notice, especially regarding the estimated public burden and associated response time, should be directed to the Office of Management and Budget, Office of Information Regulatory Affairs, Attention: Department of Justice Desk Officer, Washington, D.C. 20530.

Additionally, comments may be submitted via facsimile to (202) 395–7285. Comments may also be submitted to Department of Justice (DOJ), Justice Management Division, Information Management and Security Staff, Attention: Department Clearance Officer, Suite 850, 1001 G Street, N.W., Washington, D.C. 20530. Additionally, comments may be submitted by DOJ via facsimile to (202) 514–1590.

Written comments and/or suggestions from the public and affected agencies concerning the proposed collection of information should address one or more of the following four points:

(1) Evaluate whether the proposed collection of information is necessary for the proper performance of the functions of the agency, including

whether the information will have practical utility;

(2) Evaluate the accuracy of the agencies estimate of the burden of the proposed collection of information, including the validity of the methodology and assumptions used;

(3) Enhance the quality, utility, and clarity of the information to be collected; and

(4) Minimize the burden of the collection of information on those who are to respond, including through the use of appropriate automated, electronic, mechanical, or other technological collection techniques or other forms of information technology, e.g., permitting electronic submission of responses.

Overview of this information collection:

(1) *Type of information collection:* Reinstatement, with change, of a previously approved collection for which approval has expired.

(2)*The title of the form/collection:* National Study of Indigent Defense Systems.

(3) *The agency form number, if any, and the applicable component of the Department sponsoring the collection:* Previous OMB number was 1121–0095. The agency form number is NSID–2. Bureau of Justice Statistics, United States Department of Justice.

(4) *Affected public who will be asked or required to respond, as well as a brief abstract: Primary.* State and local providers of indigent defense services including selected county officials to identify indigent defense programs. *Other:* None.

This information collection will identify the number and characteristics of public defense organizations and agencies and measure the way in which States provide legal services for indigent criminal defendants, their caseloads, policies and practices. Information also will be gathered on type of offenses represented, expenditures, funding sources and other related administrative issues. The information collected will provide a comprehensive portrait of state and local efforts to meet the needs of indigent criminal defendants.

(5) *An estimate of the total number of respondents and the amount of time estimated for an average respondent to respond:* An estimated 750 county officials will complete a 1-hour county questionnaire. An estimated 750 state and local providers of indigent defense services will complete a 2-hour program questionnaire. Total number of respondents is estimated at 1500. The averaged completion time for both forms is 1.5 hours.

(6) *An estimate of the total public burden (in hours) associated with the collection:* 2250.00 total burden hours for the data collection.

If additional information is required contact: Ms. Brenda E. Dyer, Deputy Clearance Officer, United States Department of Justice, Information Management and Security Staff, Justice Management Division, Suite 850, Washington Center, 1001 G Street NW, Washington, DC 20530, or via facsimile at (202) 514–1534.

September 15, 1998.

Brenda E. Dyer,

Department Deputy Clearance Officer, United States Department of Justice.

[FR Doc. 98–25800 Filed 9–25–98; 8:45 am]

BILLING CODE 4410–18–M

DEPARTMENT OF JUSTICE

Office of Justice Programs

Office for Victims of Crime

Agency Information Collection Activities: Proposed Collection; Comment Request

ACTION: Notice of Information Collection Under Review; New Collection, Victims of Crime Act, Victim Assistance in Indian Country Grant Program, Grantee Performance Report

This proposed information collection is published to obtain comments from the public and affected agencies. Comments are encouraged and will be accepted until November 27, 1998. Request written comments and suggestions from the public and affected agencies concerning the proposed collection of information. Your comments should address one or more of the following four points:

(1) Does the proposed information collection instrument include all relevant program performance measures;

(2) Does the proposed information to be collected have practical utility;

(3) Does the proposed information to be collected enhance the quality and clarity of the information to be collected; and

(4) Does the proposed information to be collected minimize the burden of the collection of information on those who are to respond, including through the use of appropriate automated, electronic, mechanical, or other technological collection techniques or other forms of information technology, e.g. permitting electronic submission of responses.

If you have additional comments, suggestions, or need a copy of the proposed information collection instrument with instructions, or additional information, please contact Cynthia Darling, 202–616–3571, Office for Victims of Crime, Office of Justice Programs, U.S. Department of Justice, 810 Seventh Street, NW., Washington, DC 20531. You may also contact the Office of Management and Budget, Office of Regulatory Affairs, Attention: Department of Justice Desk Officer, Washington, DC 20530. Additionally, comments may be submitted to OMB via facsimile to (202) 395–7285. Comments may also be submitted to the Department of Justice (DOJ), Justice Management Division, Information Management and Security Staff, Attention: Department Clearance Officer, Suite 850, 1001 G Street, NW., Washington, DC 20530. Additionally, comments may be submitted to DOJ via facsimile to (202) 514–1534.

Overview of this information:

(1) *Type of information collection:* New collection.

(2) *The title of the form/collection:* Victims of Crime Act, Victim Assistance in Indian County Grant Program, Grantee Performance Report.

(3) The agency form number, if any, and the applicable component of the Department sponsoring the collection:

Form: None. Office for Victims of Crime, Office of Justice Programs, U.S. Department of Justice.

(4) *Affected public who will be asked or required to respond, as well as a brief abstract: Primary:* Tribal government. *Other:* None.

(5) An estimate of the total number of respondents and the amount of time estimated for an average respondent to respond/reply: 42 respondents to complete an annual report in 2 hours.

(6) An estimate of the total public burden (in hours) associated with the collection: 84 annual burden hours.

If additional information is required contact: Mr. Robert B. Briggs, Clearance Officer, United States Department of Justice, Information Management and Security Staff, Justice Management Division, Suite 850, Washington Center, 1001 G Street, NW., Washington, DC 20530.

Dated: September 22, 1998.

Robert B. Briggs,

Department Clearance Officer, United States Department of Justice.

[FR Doc. 98–25799 Filed 9–25–98; 8:45 am]

BILLING CODE 4410–18–M

DEPARTMENT OF LABOR

Employment and Training Administration

Notice of Determinations Regarding Eligibility To Apply for Worker Adjustment Assistance and NAFTA Transitional Adjustment Assistance

In accordance with Section 223 of the Trade Act of 1974, as amended, the Department of Labor herein presents summaries of determinations regarding eligibility to apply for trade adjustment assistance for workers (TA–W) issued during the period of September, 1998.

In order for an affirmative determination to be made and a certification of eligibility to apply for worker adjustment assistance to be issued, each of the group eligibility requirements of Section 222 of the Act must be met.

(1) That a significant number or proportion of the workers in the workers' firm, or an appropriate subdivision thereof, have become totally or partially separated,

(2) That sales or production, or both, of the firm or subdivision have decreased absolutely, and

(3) That increases of imports of articles like or directly competitive with articles produced by the firm or appropriate subdivision have contributed importantly to the separations, or threat thereof, and to the absolute decline in sales or production.

Negative Determinations for Worker Adjustment Assistance

In each of the following cases the investigation revealed that criterion (3) has not been met. A survey of customers indicated that increased imports did not contribute importantly to worker separations at the firm.

TA–W–34, 744; Lucas Varity North American Light, Vehicle Braking Systems, Mount Vernon, OH

TA–W–34,571; California Microwave, Microwave Network Systems, Stafford, TX

TA–W–34,574; B and V Enterprises, Inc., dba Valories Folk Art, Springdale, AR

TA–W–34,772; General Electric, Energy Plant Operations, Inc., Solvey, NY and Operating in the Following Location, A; Beaver Falls, NY, B; Gouvernuer, NY, C; Carthage, NY and D; South Glenns Falls, NY

TA–W–34,638; Ohmite Mfg., Huntington, IN

In the following cases, the investigation revealed that the criteria for eligibility have not been met for the reasons specified.

TA–W–34,866; Mid-Atlantic Regional Joint Board, Union of Needletrades, Industrial & Textile Employees (U.N.I.T.E.), Baltimore, MD

TA–W–34,825; Modern Distributors, Inc., Somerset, KY

TA–W–34,759; Jag Freight Systems, Tamaqua, PA

TA–W–34,801; Fleer Corp., Fleer Confections Div., Mt. Laurel, NJ

TA–W–34,824; ARC-USA, Pauls Valley, OK

The workers firm foes not produce an article as required for certification under Section 222 of the Trade Act of 1974.

TA–W–34,746; Seagate Technology, Inc., Recording Head Operation, Bloomington, MN

TA–W–34,508; Cabletron Systems, Inc., Rochester, NH

TA–W–34,668; Keystone Weaving Mills, Inc., Lebanon, PA

TA–W–34,707; Bindicator Co., Port Huron, MI

TA–W–34,846; Svedala Industries, Inc., Nitro, WV

TA–W–34,836; Camrose Technologies L.L.C., Ada, OK

TA–W–34,712; American Meter Co., Industrial Products Div., Erie, PA

TA–W–34,751; Buster Brown Apparel Co., Inc., Norton, VA

Increased imports did not contribute importantly to worker separations at the firm.

Affirmative Determinations for Worker Adjustment Assistance

The following certifications have been issued; the date following the company name and location of each determination references the impact date for all workers of such determination.

TA–W–34,812; Prema Dona Swimwear, Inc., Deer Park, NY: July 3, 1997.

TA–W–34,928; Lipton, Flemington, NJ: August 11, 1997.

TA–W–34,897; Weslock Brand Co., Compton, CA: August 12, 1997.

TA–W–34,695; Energizer Power Systems, Gainesville, FL: June 12, 1997.

TA–W–34,708; Sanyo E & E Corp., San Diego, CA: June 16, 1997.

TA–W–34,799; Dana Corp., Spicer Transmission Div., Toledo, OH: July 13, 1997.

TA–W–34,859; Strauser Manufacturing, Inc., Walla Walla, WA: August 6, 1997.

TA–W–34,649; Trident Automotive Corp., Blytheville, AR: June 1, 1997.

TA–W–34,678; Mitsubishi Semiconductor America, Inc., Durham, NC: June 9, 1997.

TA–W–34,726; Unity Knitting Mills, Wadesboro, NC: June 6, 1997.

TA–W–34,829 & A; Apparel America, Robby Len Manufacturing Plant, New Haven, CT and Capitol Swimwear Plant, Hartford, CT: July 23, 1997.

TA–W–34,804; Capstar Drilling, Odessa, TX: July 9, 1997.

TA–W–34,749; Johnson and Johnson Medical, Menlo Park, CA: June 24, 1997.

TA–W–34,815; Magnolia Garment Corp., Bude, MS: August 17, 1997.

TA–W–34,872; Stuffed Shirt, Long Beach, MS: August 6, 1997

TA–W–34,912; Dalmatia Manufacturing, Herndon, PA: August 18, 1997.

TA–W–34,841; Black Warrior Wireline Corp., Odessa, TX: July 22, 1997.

TA–W–34,869; Lone Star Steel Co., Lone Star, TX: August 6, 1997.

TA–W–34,823; Sakhina Fashions, Murphy, NC: July 20, 1997.

TA–W–34,878; Heatube Co., Clarence, MO; August 7, 1997.

TA–W–34,877; Springs Industries, Inc., Gordon, GA: August 10, 1997.

TA–W–34,957; The Oldham Saw Co., Viper Router Bit Facility, Conover, NC: August 29, 1997.

TA–W–34,888; Forbes Medical L.C. Including All Leased Workers of Sportmedco, Inc. and Business Staffing, Inc., Konawa, OK: August 5, 1997.

TA–W–34,743; Gambro Healthcare, Inc., Cobe Laboratories, Deland, FL, Including Leased Workers of TTC Illinois, Inc., Boca Raton, FL: June 25, 1997.

TA–W–34,648; Tiffany Fabrics, Inc., New York, NY: June 1, 1997.

TA–W–34,742; Cortese Manufacturing Co., Bayshore, NY; June 13, 1997.

TA–W–34,917; Bristol Apparel, Bristol, TN: August 17, 1997.

TA–W–34,761; The Oldham Saw Co., Burt, NY: July 8, 1997.

TA–W–34,733; NRB Industries, Inc., Radford, VA; and Beavertown, PA: June 22, 1997.

TA–W–34,809; Tema Enterprises, Passaic, NJ: July 16, 1997.

TA–W–34,857; Imation Corp., Printing & Proofing Products, Business Unit, Kearneysville, WV: August 5, 1997.

TA–W–34,923; Delta Apparel Co., Washington, GA: August 18, 1997.

TA–W–34,702; United Design Corp., Wewoka, OK: June 15, 1997.

TA–W–34,688; Breuil Automation, Inc., Gainesville, GA: June 12, 1997.

TA–W–34,840 & A; Whisper Kits, Inc., Clinton, NC and Vass, NC: July 27, 1997.

TA–W–34,926; T.W. Hager Lumber Co., Inc., Including Temporary Workers from Corporate Staffing Resources, Dowagiac, MI: August 21, 1997.

TA–W–34,911; Etonic Worldwide Corp., Richmond, ME: August 21, 1997.

TA–W–34,871; Anvil Knitwear, Red Springs, NC: August 7, 1997.

TA–W–34,900; OKI Semiconductor Manufacturing, Tualatin, OR: August 12, 1997.

TA–W–34,676; United Container Machinery, Inc., Glen Ann, MD: May 22, 1997.

TA–W–34,826; Caro-Knit and C-Knit Apparel, The Dixie Group, Inc., Jefferson, SC: July 23, 1997.

TA–W–34,833; Capital Mercury Apparel LTD, d/b/a Flint Rock Shirt Co., Marshall, AR and Blanchard Shirt Co., Mt. View, AR: March 15, 1998.

TA–W–34,725; Millport Slacks, Millport, AL: June 15, 1997.

TA–W–34,913; Homemaker Industries, Inc., Homemaker of Tennessee-Athens Div., Athens, TN: August 13, 1997.

Also, pursuant to Title V of the North American Free Trade Agreement Implementation Act (Pub. L. 103–182) concerning transitional adjustment assistance hereinafter called (NAFTA–TAA) and in accordance with Section 250(a), Subchapter D, Chapter 2, Title II, of the Trade Act as amended, the Department of Labor presents summaries of determinations regarding eligibility to apply for NAFTA–TAA issued during the month of September, 1998.

In order for an affirmative determination to be made and a certification of eligibility to apply for NAFTA–TAA the following group eligibility requirements of Section 250 of the Trade Act must be met:

(1) That a significant number or proportion of the workers in the workers' firm, or an appropriate subdivision thereof, (including workers in any agricultural firm or appropriate subdivision thereof) have become totally or partially separated from employment and either—

(2) That sales or production, or both, of such firm or subdivision have decreased absolutely.

(3) That imports from Mexico or Canada of articles like or directly competitive with articles produced by such firm or subdivision have increased, and that the increases in ports contributed importantly to such workers' separations or threat of separation and to the decline in sales or production of such firm or subdivision; or

(4) That there has been a shift in production by such workers' firm or subdivision to Mexico or Canada of articles like or directly competitive with articles which are produced by the firm or subdivision.

Negative Determinations NAFTA–TAA

In each of the following cases the investigation revealed that criteria (3) and (4) were not met. Imports from Canada or Mexico did not contribute importantly to workers' separations. There was no shift in production from the subject firm to Canada or Mexico during the relevant period.

NAFTA–TAA–02574; United Technologies Automotive, Bay City, MI

NAFTA–TAA–02428 & NAFTA–TAA–02429; Pacificorp, Inc., Centralia Mining Co., Centralia, WA and Centralia Steam Plant, Centralia, WA

NAFTA–TAA–02570; Imation Corp., Printing & Proofing Products Business Unit, Kearneysville, WV

NAFTA–TAA–02470; American Meter Co., Erie, PA

NAFTA–TAA–02577; Delta Apparel Co., Washington, GA

NAFTA–TAA–02554; OKI Semiconductor Manufacturing, Tualatin, OR

NAFTA–TAA–02421; Ohmite Mfg., Huntington, IN

NAFTA–TAA–02516, General Electric, Energy Plant Operations, Inc. Solvay, NY and Operating in the Following Locations: A; Beaver Falls, NY, B; Gouvernuer, NY, C; Carthage, NY and D; South Glenns Falls, NY

NAFTA–TAA–02460; United Knitting Mills, Wadesboro, NC

NAFTA–TAA–02441; B & V Enterprises, Inc., Valories Folk Art, Springdale, AR

NAFTA–TAA–02482; Lucas Varity, North American Light Vehicle Braking Systems, Mount Vernon, OH

NAFTA–TAA–02524; Tri Americas, Inc., a/k/a Try America, Inc., El Paso, TX

NAFTA–TAA–02486; Bindicator Co., Port Huron, MI

The investigation revealed that the criteria for eligibility have not been met for the reasons specified.

NAFTA–TAA–02504; Fleer Corp., Fleer Confections Div., Mt. Laurel, NJ

NAFTA–TAA–2551; Matsushita Electric Corp. of America, Matsushita Television Co., San Diego, CA

The investigation revealed that the workers of the subject firm did not produce an article within the meaning of Section 250(a) of the Trade Act, as amended.

Affirmative Determinations NAFTA–TAA

NAFTA–TAA–02527 & A; NACCO Materials Handling Group, Inc., Yake Materials, Flemington, NJ and Hyster Co., Danville, IL: June 18, 1997.

NAFTA–TAA–02541; Hewlett-Packard Co., Loveland Tape Operation, Loveland, Co: July 31, 1997.

NAFTA–TAA–02588; T.W. Hager Lumber Co., Inc., Including Temporary Workers from Coporate Staffing Resources, Dowagiac, MI: August 21, 1997.

NAFTA–TAA–02538 & A; Whisper Knits, Inc., Clinton, NC and Vass, NC: July 27, 1997.

NAFTA–TAA–02505; Homemaker Industries, Inc., Homemaker of Tennessee—Athens Div., Athens, TN: July 10, 1997

NAFTA–TAA–02584; Dalmatia Manufacturing, Herndon, PA: August 18, 1997.

NAFTA–TAA–02530; Caro-Knit and C-Knit Apparel, The Dixie Group, Inc., Jefferson, SC: July 23, 1997

NAFTA–TAA–02553; Heatube Co., Clarence , Mo: August 14, 1997.

NAFTA–TAA–02476; Johnson and Johnson Medical, Menlo Park, CA: July 3, 1997.

NAFTA–TAA–02560; General Electric Co., Meter Business, Somersworth, NH: August 10, 1997.

NAFTA–TAA–02552; Springs Industries, Inc., Gordon, GA: August 10, 1997.

NAFTA–TAA–02563; Lone Star Steel Co., Lone Star, TX: August 6, 1997.

NAFTA–TAA–02548 & A; Apparel America, Robby Len Manufacturing Plant, New Haven, CT and Capitol Swimwear Plant, Hartford, CT: July 11, 1997

NAFTA–TAA–02507; Weslock Brand Co., Compton, CA: June 23, 1997.

NAFTA–TAA–02531; Sakhina Fashions, Murphy, NC: July 20, 1997.

NAFTA–TAA–02521 & A; Capital Murcury Apparel, LTD, d/b/a Flint Rock Shirt Co., Marshall, AR and d/b/a/ Blanchard Shirt Co., Mt. View, AR: March 15, 1998.

NAFTA–TAA–02490; TKC Apparel, Inc., Reidsville, GA: July 6, 1997.

I hereby certify that the aforementioned determinations were issued during the month of September 1998. Copies of these determinations are available for inspection in Room C–4318, U.S. Department of Labor, 200 Constitution Avenue, N.W., Washington, D.C. 20210 during normal business hours or will be mailed to persons who write to the above address.

Dated: September 17, 1998,

Grant D. Beale,

Acting Director, Office of Trade Adjustment Assistance.

[FR Doc. 98–25835 Filed 9–25–98; 8:45 am]

BILLING CODE 4510–30–M

DEPARTMENT OF LABOR

Employment and Training Administration

Investigations Regarding Certifications of Eligibility To Apply for Worker Adjustment Assistance

Petitions have been filed with the Secretary of Labor under Section 221(a) of the Trade Act of 1974 (''the Act'') and are identified in the Appendix to this notice. Upon receipt of these petitions, the Acting Director of the Office of Trade Adjustment Assistance, Employment and Training Administration, has instituted investigations pursuant to Section 221(a) of the Act.

The purpose of each of the investigations is to determine whether the workers are eligible to apply for adjustment assistance under Title II, Chapter 2, of the Act. The investigations will further relate, as appropriate, to the determination of the date on which total or partial separations began or threatened to begin and the subdivision of the firm involved.

The petitioners or any other persons showing a substantial interest in the subject matter of the investigations may request a public hearing, provided such request is filed in writing with the Acting Director, Office of Trade Adjustment Assistance, at the address shown below, not later than October 8, 1998.

Interested persons are invited to submit written comments regarding the subject matter of the investigations to the Acting Director, Office of Trade Adjustment Assistance, at the address shown below, not later than October 8, 1998.

The petitions filed in this case are available for inspection at the Office of the Acting Director, Office of Trade Adjustment Assistance, Employment and Training Administration, U.S. Department of Labor, 200 Constitution Avenue, N.W., Washington, D.C. 20210.

Signed at Washington, DC, this 14th day of September, 1998.

Grant D. Beale,

Acting Director, Office of Trade Adjustment Assistance.

APPENDIX

[Petitions instituted on 09/14/98]

TA–W	Subject firm (petitioners)	Location	Date of petition	Product(s)
34,958	El and El Novelty Co (Wrks)	New York, NY	08/27/98	Distribution of Apparel.
34,959	Hubell, Kellerns Div. (Wrks)	Stonington, CT	08/30/98	Cord Connectors and Grips.
34,960	Warren Group Co (The) (Wrks)	Secaucus, NJ	08/20/98	Distribute Ladies' Dresses.
34,961	Interfrost, Inc ((Wrks)	East Rochester, NY	08/27/98	Packer and Fruits and Vegetables.
34,962	Koszegi Industries, Inc (Comp)	South Bend, IN	08/25/98	Vinyl, Leather and Nylon Cases.
34,963	Burlen Corp. (Comp)	Thomasville, GA	08/28/98	Ladies' Undergarments.
34,964	Rhone-Poulenc Ag Co (Wrks)	Research T. Pk, NC	08/21/98	Pesticides.
34,965	ARCO Western Energy (Comp)	Bakersfield, CA	08/20/98	Crude Oil, Natural Gas.
34,966	Central Resources, Inc (Comp)	Midland, TX	08/26/98	Oil and Gas.
34,967	Wundies, Inc (Wrks)	Wellsboro, PA	08/31/98	Children's Undergarments, Sleepwear.
34,968	FirstMiss Steel, Inc (USWA)	Hollsopple, PA	08/30/98	Specialty and Stainless Steel Products.
34,969	Allegheny Teledyne, Inc (Comp)	City of Industry, CA	09/04/98	Senrors.

[FR Doc. 98–25839 Filed 9–25–98; 8:45 am]

BILLING CODE 4510–30–M

DEPARTMENT OF LABOR

Employment and Training Administration

[TA–W–34,634 and TA–W–34,634A]

Gould Electronics, Incorporated, Circuit Protection Group, Newburyport, Massachusetts; and Circuit Protection Group, El Paso, Texas; Amended Certification Regarding Eligibility To Apply for Worker Adjustment Assistance

In accordance with Section 223 of the Trade Act of 1974 (19 USC 2273) the Department of Labor issued a Certification of Eligibility to Apply for Worker Adjustment Assistance on July 7, 1998, applicable to all workers of Gould Electronics, Incorporated, Circuit Protection Group, Newburyport, Massachusetts. The notice was published in the **Federal Register** on August 7, 1998 (63 FR 42434).

At the request of the company, the Department reviewed the certification for workers of the subject firm. New findings show that worker separations at the Circuit Protection Group, El Paso, Texas facility of Gould Electronics, Incorporated are scheduled to begin in October, 1998 and continue through December, 1998 when it closes. The workers are engaged in the production of electrical fuses. Accordingly, the Department is amending the certification to cover workers at Gould Electronics, Incorporated, Circuit Protection Group, El Paso, Texas.

The intent of the Department's certification is to include all workers of Gould Electronics, Incorporated adversely affected by increased imports.

The amended notice applicable to TA–W–34,634 is hereby issued as follows:

All workers of Gould Electronics, Incorporated, Circuit Protection Group, Newburyport, Massachusetts (TA–W–34,634), and Circuit Protection Group, El Paso, Texas (TA–W–34,634A) who became totally or partially separated from employment on or after June 12, 1997 through July 7, 2000 are eligible to apply for adjustment assistance under Section 223 of the Trade Act of 1974.

Signed at Washington DC, this 17th day of September, 1998.

Grant D. Beale,

Acting Director, Office of Trade Adjustment Assistance.

[FR Doc. 98–25841 Filed 9–25–98; 8:45 am]

BILLING CODE 4510–30–M

DEPARTMENT OF LABOR

Employment and Training Administration

Investigations Regarding Certifications of Eligibility To Apply for Worker Adjustment Assistance

Petitions have been filed with the Secretary of Labor under Section 221(a) of the Trade Act of 1974 (''the Act'') and are identified in the Appendix to this notice. Upon receipt of these petitions, the Acting Director of the Office of Trade Adjustment Assistance, Employment and Training Administration, has instituted

investigations pursuant to Section 221(a) of the Act.

The purpose of each of the investigations is to determine whether the workers are eligible to apply for adjustment assistance under Title II, Chapter 2, of the Act. The investigations will further relate, as appropriate, to the determination of the date on which total or partial separations began or threatened to begin and the subdivision of the firm involved.

The petitioners or any other persons showing a substantial interest in the subject matter of the investigations may request a public hearing, provided such request is filed in writing with the Acting Director, Office of Trade Adjustment Assistance, at the address show below, not later than October 8, 1998.

Interested persons are invited to submit written comments regarding the subject matter of the investigations to the Acting Director, Office of Trade Adjustment Assistance, at the address shown below, not later than October 8, 1998.

The petitions filed in this case are available for inspection at the Office of the Acting Director, Office of Trade Adjustment Assistance, Employment and Training Administration, U.S. Department of Labor, 200 Constitution Avenue, N.W., Washington, D.C. 20210.

Signed at Washington, DC, this 8th day of September, 1998.

Grant D. Beale,

Acting Director, Office of Trade Adjustment Assistance.

APPENDIX

[Petitions instituted on 09/08/1998]

TA–W	Subject firm (petitioners)	Location	Date of petition	Product(s)
34,938	Kevlaur Industries, Inc (Co.)	Howland, ME	08/19/1998	Cedar Bark Mulch.
34,939	Lee Sportswear, Inc (Co.)	Plantersville, MS	08/25/1998	Medical Uniforms.
34,940	Briggs and Stratton Corp (UPIU)	Wauwatosa, WI	08/24/1998	Gasoline Engines.
34,941	Nu-Kote International (Wkrs)	Nogales, AZ	08/29/1998	Imaging Products, Typewriters, Printers.
34,942	U.S. Reduction (UAW)	Toledo, OH	08/25/1998	Recycler of Aluminum Scrap.
34,943	Profiles (Co.)	New York, NY	08/24/1998	Ladies' Sportwear.
34,944	Somaber Corporation (Wkrs)	Miami, FL	08/17/1998	Children's T-Shirts, Pants, Blouses.
34,945	St. Paul Apparel, Inc. (Co.)	St. Paul, VA	08/25/1998	Men's and Ladies' Knit Shirts.
34,946	GCO Apparel Corp (Wkrs)	Bowdon, GA	08/24/1998	Men's Tailored Coats.
34,947	Texas Instruments, Inc (Wkrs)	Midland, TX	08/20/1998	Ceramic Military Semiconductor Devices.
34,948	DuPont Corporation (Wkrs)	Goose Creek, SC	08/21/1998	Polyester Filament Yarns.
34,949	ADEMCO (Wkrs)	El Paso, TX	08/25/1998	Alarm Devices.
34,950	Kidz Klothz Group, Inc (Co.)	New York, NY	08/25/1998	Children's Sportswear.
34,951	Schlumberger Anadrill (Wkrs)	Casper, WY	08/18/1998	Oil Drillings Services.
34,952	Banana Tree (The) (UNITE)	El Paso, TX	08/27/1998	Vaccumm Cleaner Components.
34,953	Stewart Superior Corp (Wkrs)	Chicago, IL	08/24/1998	Machinery for Rubber Products.
34,954	Stone Apparel (Co.)	Columbia, SC	08/24/1998	Men's Boxer Shorts.
34,955	Caza Drilling, Inc (Wkrs)	Williston, ND	08/26/1998	Oil Drilling Services.
34,956	Thomas and Betts Corp (IBEW)	Athens, TN	08/20/1998	Electrical Switch Boxes, Connectors.
34,957	Oldhamn Saw Company (The) (Co.)	Conover, NC	08/29/1998	Circular Saw Blades.

[FR Doc. 98–25840 Filed 9–25–98; 8:45 am]

BILLING CODE 4510–30–M

DEPARTMENT OF LABOR

Employment and Training Administration

[TA–W–34,229]

Kleinerts Incorporated of Alabama, Greenville, Alabama; Notice of Negative Determination on Reconsideration on Remand

The United States Court of International Trade (USCIT) granted the Secretary of Labor's motion for a voluntary remand for further investigation in *Former Employees of Kleinerts, Inc.* v. *Secretary of Labor,* No. 98–05–01438.

The Department's initial denial for the workers of Kleinerts Incorporated of Alabama, in Greenville, Alabama issued on March 19, 1998 and published in the **Federal Register** on April 3, 1998 (63 Fed. Reg. 16,574), was based on the fact that criterion (3) of the group eligibility requirements of Section 222 of the Trade Act of 1974, as amended, was not met.

The petitioners request for reconsideration resulted in a negative determination regarding the application which was issued on April 15, 1998 and published in the **Federal Register** on April 27, 1996 (63 Fed. Reg. 20,655). The Department's findings affirmed that imports did not contribute importantly to the workers separation.

On remand, the Department contacted the company official to clarify certain aspects of its business relationship with its primary and secondary customers in order to determine if there was an import impact for these workers. The Department requested (1) additional information on production at the subject facility; (2) information on the length of the contract with the primary customer of the subject facility; (3) information on the disposition of the equipment from the subject facility; and (4) information on other contracts for articles produced at the subject facility.

None of the equipment which was shipped offshore is being used to produce other products not like or directly competitive with those manufactured at the Greenville facility.

The primary customer reported no imports of like or directly competitive articles. A secondary customer, which was used as production fill-in at the subject facility, reported imports of less than six percent of like or directly competitive articles to those made by the subject facility.

Conclusion

After reconsideration on remand, I affirm the original notice of negative determination of eligibility to apply for adjustment assistance for workers and former workers of Kleinerts Incorporated of Alabama in Greenville, Alabama.

Signed at Washington, D.C. this 9th day of September 1998.

Grant D. Beale,

Acting Director, Office of Trade Adjustment Assistance.

[FR Doc. 98–25836 Filed 9–25–98; 8:45 am]

BILLING CODE 4510–30–M

DEPARTMENT OF LABOR

Employment and Training Administration

[TA–W–34, 522]

LTV Steel Corporation, Pittsburgh Coke Works, Pittsburgh, Pennsylvania; Dismissal of Application for Reconsideration

Pursuant to 29 CFR 90.18(C) an application for administrative reconsideration was filed with the Acting Director of the Office of Trade Adjustment Assistance for workers at the LTV Steel Corporation, Pittsburgh Coke Works, Pittsburgh, Pennsylvania. The review indicated that the application contained no new substantial information which would bear importantly on the Department's determination. Therefore, dismissal of the application was issued.

TA–W–34, 522; LTV Steel Corporation, Pittsburgh Coke Works, Pittsburgh, Pennsylvania (September 15, 1998)

Signed at Washington, D.C. this 16th day of September, 1998.

Grant D. Beale,

Acting Director, Office of Trade Adjustment Assistance.

[FR Doc. 98–25837 Filed 9–25–98; 8:45 am]

BILLING CODE 4510–30–M

DEPARTMENT OF LABOR

Employment and Training Administration

[TA–W–34, 655]

Try America, Incorporated; El Paso, Texas; Dismissal of Application for Reconsideration

Pursuant to 29 CFR 90.18(C) an application for administrative reconsideration was filed with the Acting Director of the Office of Trade Adjustment Assistance for workers at Try America, Incorporated, El Paso, Texas. The review indicated that the application contained no new substantial information which would bear importantly on the Department's determination. Therefore, dismissal of the application was issued.

TA–W–34, 655; Try America, Incorporated El Paso, Texas (September 17, 1998)

Signed at Washington, DC this 18th day of September, 1998.

Grant D. Beale,

Acting Director, Office of Trade Adjustment Assistance.

[FR Doc. 98–25838 Filed 9–25–98; 8:45 am]

BILLING CODE 4510–30–M

DEPARTMENT OF LABOR

Employment and Training Administration

[NAFTA–02438, and NAFTA–02438A]

Gould Electronic, Incorporated, Circuit Protection Group, Newburyport, MA; and Circuit Protection Group, El Paso, TX; Amended Certification Regarding Eligibility To Apply for NAFTA-Transitional Adjustment Assistance

In accordance with Section 250(a), Subchapter D, Chapter 2, Tital II, of the Trade Act of 1974 as amended (19 USC 2273) the Department of Labor issued a Certification of Eligibility to Apply for Worker Adjustment Assistance on July 7, 1998, applicable to all workers at Gould Electronics, Incorporated, Circuit Protection Group, Newburyport, Massachusetts. The notice was published in the **Federal Register** on July 31, 1998 (63 FR 40936).

At the request of the company, the Department reviewed the certification for workers of the subject firm. New findings show that worker separations at the Circuit Protection Group, El Paso, Texas facility of Gould Electronics, Incorporated are scheduled to begin in October, 1998 and continue through December, 1998 when it closes. The workers are engaged in the production of electrical fuses.

Accordingly, the Department is amending the certification to cover the workers of Gould Electronics, Incorporated, Circuit Protection Group, El Paso, Texas.

The intent of the Department's certification is to include all workers of Gould Electronics, Incorporated adversely affected by increased imports from Mexico.

The amended notice applicable to NAFTA–02438 is hereby issued as follows:

All workers of Gould Electronics, Incorporated, Circuit Protection Group, Newburyport, Massachusetts (NAFTA–02438), and Circuit Protection Group, El Paso, Texas (NAFTA–02438A), who became totally or partially separated from employment on or after May 20, 1997 through July 7, 2000 are eligible to apply for NAFTA–TAA under Section 250 of the Trade Act of 1974.

Signed at Washington, DC, this 17th day of September, 1998.

Grant D. Beale,

Acting Director, Office of Trade Adjustment Assistance.

[FR Doc. 98–25842 Filed 9–25–98; 8:45 am]

BILLING CODE 4510–30–M

LIBRARY OF CONGRESS

Copyright Office

[Docket No. RM 98–9]

Privacy Act of 1974: Current Systems of Records

AGENCY: Copyright Office, Library of Congress.

ACTION: Notice of current systems of records and of establishment of new systems of records.

SUMMARY: The Copyright Office is publishing a list of its systems of records with descriptions of the records and the ways they are maintained, as is required by the Privacy Act of 1974. This updates the list published August 16, 1993, and reflects changes, additions and deletions of records maintained by the Office since the last publication of systems of records. This will enable members of the public who wish to access information the Office maintains to make accurate and specific requests for such information.

DATES: Comments should be received on or before November 1, 1998. These systems of records will become effective November 1, 1998, unless the Copyright Office publishes notice to the contrary.

ADDRESSES: Interested persons should submit ten copies of their written comments: If by mail to Office of General Counsel, Copyright Office, Library of Congress, Washington, DC 20559–6000. By hand to: Office of General Counsel, Copyright Office, Library of Congress, James Madison Memorial Building, LM 403, 1st and Independence Avenue, SE., Washington, DC 20559–6000.

FOR FURTHER INFORMATION CONTACT: Marilyn J. Kretsinger, Assistant General Counsel, or Patricia L. Sinn, Senior Attorney, Copyright Office, Library of Congress, Washington, DC 20559–6000. Telephone: (202) 707–8380. Fax: (202) 707–8366.

SUPPLEMENTARY INFORMATION: The Copyright Office periodically reviews and reports the systems of records it maintains, as directed by terms of the Administrative Procedure Act (APA), title 5 of the United States Code. *See* 5 U.S.C. 552a(e)(4). The APA applies to certain Copyright Office activities

described in title 17, United States Code, section 701(d). The Office last published its systems of records August 16, 1993.

This publication of the Copyright Office systems of records reflects changes in the records maintained in the Office in light of: (1) Its new functions and duties under the Uruguay Round Agreements Act, Pub. L. 103–465, 108 Stat. 4809, 4976 (1994); (2) its new functions and duties under the Copyright Royalty Tribunal Reform Act, Pub. L. 103–198, 107 Stat. 2304 (1993) and (3) deletions or additions to existing file systems. The Uruguay Round Agreements Act added a new section 104A to the Copyright Act of 1976 establishing a procedure for restoration of copyright in certain works that had fallen into the public domain in the United States. Filings of notices of intent to restore copyrights in such works are received by the Office and recorded as records maintained here for reference. The Office is identifying as a new file CO–27 ''Notices of Intent to Enforce Copyrights Restored Under the Uruguay Round Agreements Act. The Copyright Royalty Tribunal Reform Act created a new system of Copyright Arbitration Royalty Panels to administer copyright compulsory licensing provisions in sections 111, 114, 115, 118, 119, and Chapter 10. Files containing related information and documentation can be found in CO–11–CO–23.

The Office is making available as separate file systems: CO–9 ''Freedom of Information Act Annual Reports,'' CO–24 ''Licensing Division File of Specialty Station Claimants,'' and CO–28 ''Requests for Copyright Office Litigation Statements.'' It is also deleting several files that it no longer maintains; these files were formerly titled ''Master Index Card Files,'' ''Office Mailing List Files,'' '' Secondary Transmission by Cable Systems: Initial Notice of Identity and Changes Files,'' and ''Jukebox License Application.''

Table of Contents

CO–1—Copyright In-Process System (COINS)
CO–2—Copyright Claims Registration Files
CO–3—Miscellaneous Correspondence Files
CO–4—Recorded Document Files
CO–5—Motion Picture Agreement Files
CO–6—Deposit Recordation File
CO–7—Compliance Activity File
CO–8—Freedom of Information Act and Privacy Act Requests and Disclosures File
CO–9—Freedom of Information Act Annual Reports
CO–10—Address File
CO–11—Secondary Transmissions by Cable Systems: Statements of Account
CO–12—Secondary Transmissions by Satellite Carriers for Private Home Viewing: Statements of Account
CO–13—Licensing Division Correspondence Files
CO–14—Secondary Transmission by Cable Systems: Correspondence Files
CO–15—Cable System Videotape Transfer Contracts File
CO–16—Network Name and Address File for Satellite Carrier Statutory License
CO–17—Voluntary Licensing Agreements File
CO–18—Satellite Carrier Licensing Agreements File
CO–19—Notice of Intention to Obtain Compulsory License for Making and Distributing Phonorecords Embodying Nondramatic Musical Works File
CO–20—Annual List of Claimants to the Satellite Carrier License Royalties
CO–21—Annual List of Claimants to the Cable Compulsory License Royalties
CO–22—Annual List of Claimants to the Digital Audio Recording Technology Royalties
CO–23—Records of Proceedings to Distribute Royalty Fees or Adjust Royalty Rates
CO–24—Licensing Division File of Specialty Station Claimants
CO–25—Mask Work Registration Files
CO–26—Mask Work Recorded Documents File
CO–27—Notices of Intent to Enforce Copyrights Restored Under the Uruguay Round Agreements Act
CO–28—Litigation Statement Authorization File

CO–1

SYSTEM NAME:

Copyright In-Process System (COINS).

SYSTEM LOCATION:

Copyright Office, Library of Congress, Washington, DC 20559–6000.

CATEGORIES OF INDIVIDUALS COVERED BY THE SYSTEM:

Individuals who make fee service requests to the Office, including individuals who maintain deposit accounts.

CATEGORIES OF RECORDS IN THE SYSTEM:

If remittance received: Name of remitter, appropriate cross-references, title of work, amount received, amount used, class of application or fee service code, number of copies, nature of deposit code.

If deposit account: Name of deposit account holder, title of work, debit, credit notation, old balance, new balance, class of application or fee service code, number of copies, nature of deposit code.

AUTHORITY FOR MAINTENANCE OF THE SYSTEM:

17 U.S.C. 705, 708.

ROUTINE USES OF RECORDS MAINTAINED IN THE SYSTEM, INCLUDING CATEGORIES OF USERS AND THE PURPOSES OF SUCH USES:

The Office uses these records to: (1) Record copyright fee charges, reconcile deposits of fees and generate accounting reports; (2) create a record of receipt of all fee service requests; (3) determine the status of recently submitted requests, including the registration number assigned; (4) send periodic statements to deposit account holders of their transactions with the Office; and (5) notify deposit account holders that their accounts have become depleted.

POLICIES AND PRACTICES FOR STORING, RETRIEVING, ACCESSING, RETAINING, AND DISPOSING OF RECORDS IN THE SYSTEM:

STORAGE:

Records kept from November 1, 1977. Records are on computer discs and tapes.

RETRIEVABILITY:

By name of remitter, title, deposit account holder, deposit account number, and transaction identification number.

SAFEGUARDS:

Records are stored in a room which is restricted to authorized personnel and locked during nonworking hours. Computer access is by functional passwords which are restricted to personnel who require access to these records in the performance of their official duties.

RETENTION AND DISPOSAL:

The computerized system is used to store transactions for at least six months, at which time the record is transferred to microfilm for permanent retention.

SYSTEM MANAGER(S) AND ADDRESS:

Section Head, Fiscal Control Section, Receiving and Processing Division, Copyright Office, Library of Congress, Washington, DC 20559–6000.

NOTIFICATION PROCEDURE:

Inquiries about an individual's record should be in writing addressed to the Supervisory Copyright Information Specialist, Information Section, Information and Reference Division, Copyright Office, Library of Congress, Washington, DC 20559–6000.

RECORD ACCESS PROCEDURE:

Requests from individuals should be in writing addressed to the official designated under ''Notification Procedure.''

CONTESTING RECORD PROCEDURES:

See rules published in 37 CFR part 204.

RECORD SOURCE CATEGORIES:

Individuals who request fee services.

CO–2

SYSTEM NAME:

Copyright Claims Registration Files.

SYSTEM LOCATION:

Copyright Office, Library of Congress, Washington, DC 20559–6000; Landover Center Annex, 1701 Brightseat Road, Landover, MD 20785; Washington National Records Center, Washington, DC 20409.

CATEGORIES OF INDIVIDUALS COVERED BY THE SYSTEM:

Authors and other copyright owners, copyright claimants, applicants for registration or copyright renewal, or the authorized agents of such individuals.

CATEGORIES OF RECORDS IN THE SYSTEM:

Names and addresses of copyright claimants; certified statements pertaining to authorship, creation, publication, and other registration related information; general correspondence pertaining to registration of claims to copyright.

AUTHORITY FOR MAINTENANCE OF THE SYSTEM:

17 U.S.C. 705, 708.

ROUTINE USES OF RECORDS MAINTAINED IN THE SYSTEM, INCLUDING CATEGORIES OF USERS AND THE PURPOSES OF SUCH USES:

The Office uses these records to: (1) Prepare search reports at the request of a member of the public; (2) respond to requests by the public for information; (3) correspond with applicants or otherwise process applications and related materials; (4) monitor and control the flow of work in the Office; and (5) establish and maintain a public record. It is the general policy of the Copyright Office to deny direct public inspection of in-process application forms and correspondence, and any related material forming part of a pending application, except upon the request of the copyright claimant or his or her authorized representative. Once registration of a copyright claim has been completed or refused at the final agency level, the registration and correspondence records pertaining to that claim are open for public inspection from 8:30 a.m. to 5 p.m., Monday through Friday, except legal holidays.

POLICIES AND PRACTICES FOR STORING, RETRIEVING, ACCESSING, RETAINING, AND DISPOSING OF RECORDS IN THE SYSTEM:

STORAGE:

Envelopes in file cabinets and on shelves, index cards in file cabinets, bound volumes and microfilm computer types and disks; Copyright Office Electronic Registration, Recordation and Deposit Systems (CORDS) records are stored on-line.

RETRIEVABILITY:

Registration number, cross-referenced by name of author, name of claimant, and title of work in the Copyright Card Catalog and post-1977 automated catalog files; alphabetically by author's pseudonym (prior to 1938) in Pseudonym Card File; on computer terminals by correspondence control number, remitter's name and any entered cross-references, in process number, registration number; in the case of physical files, by correspondence control number on a bar code label attached to each file, and in the case of on-line files, by accessing LOCIS (Library of Congress Information System) to examine the COHM, COHD, and COHS files. This can be done by connecting to LOCIS through the Library of Congress' internet gopher at marvel.loc.gov.

SAFEGUARDS:

With the exception of the Copyright Card Catalog and post-1977 automated catalog files, these records are maintained in areas that are restricted to authorized personnel. All records in this system are maintained in areas that are locked during nonworking hours.

RETENTION AND DISPOSAL:

Retained permanently.

SYSTEM MANAGER(S) AND ADDRESS:

Section Head, Renewals Section, Examining Division, Copyright Office, Library of Congress, Washington, DC 20559–6000; Section Head, Mail and Correspondence Control Section, Receiving and Processing Division, Copyright Office, Library of Congress, Washington, DC 20559–6000; Head, Records Management Section, and Head, Reference and Bibliography Section, Information and Reference Division, Copyright Office, Library of Congress, Washington, DC 20559–6000; Section Head, Technical Support Section, Cataloging Division, Copyright Office, Library of Congress, Washington, DC 20559–6000.

NOTIFICATION PROCEDURE:

Inquiries about an individual's record should be in writing addressed to the Supervisory Copyright Information Specialist, Information Section, Information and Reference Division, Copyright Office, Library of Congress, Washington, DC 20559–6000.

RECORD ACCESS PROCEDURES:

Requests from individuals should be in writing addressed to the official designated under ''Notification Procedure.''

CONTESTING RECORD PROCEDURES:

See rules published in 37 CFR part 204.

RECORD SOURCE CATEGORIES:

Remitters or their authorized agents.

CO–3

SYSTEM NAME:

Miscellaneous Correspondence Files.

SYSTEM LOCATION:

Copyright Office, Library of Congress, Washington, DC 20559–6000.

CATEGORIES OF INDIVIDUALS COVERED BY THE SYSTEM:

Individuals who have: (1) Written to the Copyright Office for information about copyright or (2) requested fee services such as search reports, copies of records or additional certificates of copyright registration.

CATEGORIES OF RECORDS IN THE SYSTEM:

General correspondence, including, where appropriate, the requester's name and action taken by the Office.[1]

AUTHORITY FOR MAINTENANCE OF THE SYSTEM:

17 U.S.C. 407–410, 705, 706, 708.

ROUTINE USES OF RECORDS MAINTAINED IN THE SYSTEM, INCLUDING CATEGORIES OF USERS AND THE PURPOSES OF SUCH USES:

The Office uses these records to: (1) Maintain a record of correspondence with individuals who address inquiries to the Office and with individuals who request fee services; (2) record the removal and return of documents in a file by Office personnel; and (3) control and monitor the processing of requests.

POLICIES AND PRACTICES FOR STORING, RETRIEVING, ACCESSING, RETAINING, AND DISPOSING OF RECORDS IN THE SYSTEM:

STORAGE:

Envelopes in file cabinets and on shelves; on occasion, 3 × 5 paper slips in a file cabinet; personal computer hard drives or diskettes.

RETRIEVABILITY:

Alphabetically by correspondent's name.

[1] Most general or routine requests for information made by letter, telephone or e-mail are answered but not permanently retained. The Licensing Division of the Copyright Office maintains a separate set of correspondence files regarding administration of the compulsory licenses in title 17, United States Code. These records are described below.

SAFEGUARDS:

These records are maintained in areas that are restricted to authorized personnel and are locked during nonworking hours.

RETENTION AND DISPOSAL:

Some files are retained indefinitely, while others are retained for only three years.

SYSTEM MANAGER(S) AND ADDRESS:

Section Head, Certification and Documents Section, Information and Reference Division, Copyright Office, Library of Congress, Washington, DC 20559–6000; Section Head, Mail and Correspondence Control Section, Receiving and Processing Division, Copyright Office, Library of Congress, Washington, DC 20559–6000.

NOTIFICATION PROCEDURE:

Inquiries about an individual's record should be in writing addressed to the Supervisory Copyright Information Specialist, Information Section, Information and Reference Division, Copyright Office, Library of Congress, Washington, DC 20559–6000.

RECORD ACCESS PROCEDURE:

Requests from individuals should be in writing addressed to the official designated under ''Notification Procedure.''

CONTESTING RECORD PROCEDURES:

See rules published in 37 CFR part 204.

RECORD SOURCE CATEGORIES:

Individual to whom the record pertains, or his or her authorized agent.

CO–4

SYSTEM NAME:

Recorded Document Files.

SYSTEM LOCATION:

Copyright Office, Library of Congress, Washington, DC 20559–6000.

CATEGORIES OF INDIVIDUALS COVERED BY THE SYSTEM:

Individuals who are parties to, or have submitted for recordation, assignments, licenses, notices of termination of transfer, and other documents pertaining to a copyright; notices of error in the name in a copyright notice; authors of anonymous and pseudonymous works in instances where any person having an interest in the copyright in such a work submits a statement identifying one or more authors of the work; authors of works in instances where any person having an interest in the copyright in a particular work submits a statement of the death of the author or a statement that the author is still living on a particular date; those who have filed notices of intent to enforce copyright (NIEs) under the Uruguay Round Agreements Act (URAA).

CATEGORIES OF RECORDS IN THE SYSTEM:

Assignments, licenses, notices of termination of transfer, wills, statements of abandonment of copyright, affidavits (such as a statement with respect to the authorship of a work), agreements or contracts, and other documents pertaining to copyright ownership, statements of identity of an anonymous or pseudonymous author, statements of the date of death of an author or that the author is still living on a particular date, notices of error in the name in a copyright notice, and notices of intent to enforce copyright under the Uruguay Round Agreements Act.

AUTHORITY FOR MAINTENANCE OF THE SYSTEM:

17 U.S.C. 104A, 203(a)(4), 205, 302, 304(c), 406(a)(2), 705.

ROUTINE USES OF RECORDS MAINTAINED IN THE SYSTEM, INCLUDING CATEGORIES OF USERS AND THE PURPOSES OF SUCH USES:

Records of recorded documents are open to public inspection from 8:30 a.m. to 5 p.m., Monday through Friday, except legal holidays. The Office uses these documents to compile an index to filings received for recordation. The index to documents received and recorded through 1977 is located in the Copyright Card Catalog. Since January 1, 1978, access to assignment documents recorded after 1977 is available in the automated document catalog file.

POLICIES AND PRACTICES FOR STORING, RETRIEVING, ACCESSING, RETAINING, AND DISPOSING OF RECORDS IN THE SYSTEM:

STORAGE:

Prior to recordation, records are maintained in envelopes in file cabinets. Once recorded, original documents are microfilmed and returned to the remitter. Copies of copyright assignments and related documents received prior to 1954 are in bound volumes as well as on microfilm.

RETRIEVABILITY:

By the date the Office received the document and cross-referenced it in the Copyright Card Catalog or automated document catalog file by individual names and titles of works, by volume and page number or microfilm, by document number and Copyright imaging system.

SAFEGUARDS:

Prior to recordation, documents and related materials are maintained in a room which is restricted to authorized personnel. All records are maintained in areas that are locked during nonworking hours.

RETENTION AND DISPOSAL:

Retained permanently.

SYSTEM MANAGER(S) AND ADDRESS:

Head, Documents Recordation Section, Cataloging Division, Copyright Office, Library of Congress, Washington, DC 20559–6000; and Section Head, Reference and Bibliography Section, Information and Reference Division, Copyright Office, Library of Congress, Washington, DC 20559–6000.

NOTIFICATION PROCEDURE:

Inquiries about an individual's record should be in writing addressed to the Supervisory Copyright Information Specialist, Information Section, Information and Reference Division, Copyright Office, Library of Congress, Washington, DC 20559–6000.

RECORD ACCESS PROCEDURES:

Request from individuals should be in writing addressed to the official designated under ''Notification Procedure.''

CONTESTING RECORD PROCEDURES:

See rules published in 37 CFR part 204.

RECORD SOURCE CATEGORIES:

Individual to whom the record pertains, such individual's authorized agent, and other parties to the document recorded, or such parties' authorized agents, as well as individuals having an interest in the copyright in a work which is the subject of the document submitted for recordation.

CO–5

SYSTEM NAME:

Motion Picture Agreement Files.

SYSTEM LOCATION:

Copyright Office, Library of Congress, Washington, DC 20559–6000.

CATEGORIES OF INDIVIDUALS COVERED BY THE SYSTEM:

Copyright depositors who have agreed to return to the Library one archival quality copy of any motion picture returned to the depositor, if the Library of Congress requests such return within two years of the date of deposit.

CATEGORIES OF RECORDS IN THE SYSTEM:

Records contain the name and address of the depositor and the date on which the Motion Picture Agreement was executed by the Librarian of Congress.

AUTHORITY FOR MAINTENANCE OF THE SYSTEM:

17 U.S.C. 407, 705.

ROUTINE USES OF RECORDS MAINTAINED IN THE SYSTEM, INCLUDING CATEGORIES OF USERS AND THE PURPOSES OF SUCH USES:

The Office uses these records to determine if the Library of Congress has a Motion Picture Agreement with the depositor of a motion picture. If the Library has such an agreement, the copy of the motion picture submitted will be returned to the remitter if a written request has been made. In the absence of such an agreement, the Office will retain the copy.

POLICIES AND PRACTICES FOR STORING, RETRIEVING, ACCESSING, RETAINING, AND DISPOSING OF RECORDS IN THE SYSTEM:

STORAGE:

Upon receipt of these Agreements, the Copyright Acquisitions Division transcribes some of the information in the agreements onto 3 x 5 cards, copies of which are then sent to the Performing Arts Section of the Copyright Office Examining Division, where a physical file is maintained; computerized data base also maintained.

RETRIEVABILITY:

Alphabetically by depositor's name.

SAFEGUARDS:

These records are maintained in a room which is restricted to authorized personnel and locked during nonworking hours.

RETENTION AND DISPOSAL:

Retained indefinitely.

SYSTEM MANAGER(S) AND ADDRESS:

Chief, Copyright Acquisitions Division, Copyright Office, Library of Congress, Washington, DC 20559–6600.

NOTIFICATION PROCEDURE:

Inquiries about an individual's record should be in writing addressed to the Supervisory Copyright Information Specialist, Information Section, Information and Reference Division, Copyright Office, Library of Congress, Washington, DC 20559–6000.

RECORD ACCESS PROCEDURES:

Request from individuals should be in writing addressed to the official designated under ''Notification Procedure.''

CONTESTING RECORD PROCEDURES:

See rules published in 37 CFR part 204.

RECORD SOURCE CATEGORIES:

Depositors or their authorized agents.

CO–6

SYSTEM NAME:

Deposit Recordation File.

SYSTEM LOCATION:

Copyright Office, Library of Congress, Washington, DC 20559–6000.

CATEGORIES OF INDIVIDUALS COVERED BY THE SYSTEM:

Individuals who, without simultaneously applying for copyright registration, have submitted deposit copies in accordance with the provisions of 17 U.S.C. 407.

CATEGORIES OF RECORDS IN THE SYSTEM:

Title of work, edition statement, imprint, collation, in notice statement, depositor, depositor's address, number of copies received, date received, and disposition.

AUTHORITY FOR MAINTENANCE OF THE SYSTEM:

17 U.S.C. 407, 705.

ROUTINE USES OF RECORDS MAINTAINED IN THE SYSTEM, INCLUDING CATEGORIES OF USERS AND THE PURPOSES OF SUCH USES:

The Office uses these records to: (1) Keep a record of compliance with 17 U.S.C. 407; (2) locate and correspond with those who have published works but who have not deposited the required copies; (3) prepare weekly statistics on the number and nature of deposits received; and (4) prepare search reports at the request of a member of the public.

POLICIES AND PRACTICES FOR STORING, RETRIEVING, ACCESSING, RETAINING, AND DISPOSING OF RECORDS IN THE SYSTEM:

STORAGE:

4 × 6 inch index cards in a cabinet and visible file; records from April 5, 1993, kept on computer disk.

RETRIEVABILITY:

Alphabetically by depositor's name, author's name, and title of work.

SAFEGUARDS:

These records are maintained in a room which is restricted to authorized personnel and locked during nonworking hours.

RETENTION AND DISPOSAL:

Retained permanently.

SYSTEM MANAGER(S) AND ADDRESS:

Chief, Copyright Cataloging Division, Copyright Office, Library of Congress, Washington, DC 20559–6000.

NOTIFICATION PROCEDURE:

Inquiries about an individual's record should be in writing addressed to the Supervisory Copyright Information Specialist, Information Section, Information and Reference Division, Copyright Office, Library of Congress, Washington, DC 20559–6000.

RECORD ACCESS PROCEDURES:

Requests from individuals should be in writing addressed to the official designated under ''Notification Procedure.''

CONTESTING RECORD PROCEDURES:

See rules published in 37 CFR part 204.

RECORD SOURCE CATEGORIES:

Deposit copies submitted.

CO–7

SYSTEM NAME:

Compliance Activity File.

SYSTEM LOCATION:

Copyright Office, Library of Congress, Washington, DC 20559–6000.

CATEGORIES OF INDIVIDUALS COVERED BY THE SYSTEM:

Individuals from whom the Office has demanded, in accordance with 17 U.S.C. 407, copies of works published in the United States. It also includes individuals whose works were found to be deposited in accordance with 17 U.S.C. 407 prior to a demand.

CATEGORIES OF RECORDS IN THE SYSTEM:

Author's name, title of work, publisher, copyright claimant, dates of initial and follow-up action.

AUTHORITY FOR MAINTENANCE OF THE SYSTEM:

17 U.S.C. 407, 705.

ROUTINE USES OF RECORDS MAINTAINED IN THE SYSTEM, INCLUDING CATEGORIES OF USERS AND THE PURPOSES OF SUCH USES:

The Office uses these records to avoid sending out duplicate correspondence.

POLICIES AND PRACTICES FOR STORING, RETRIEVING, ACCESSING, RETAINING, AND DISPOSING OF RECORDS IN THE SYSTEM:

STORAGE:

4 x 6 inch index cards in a file cabinet.

RETRIEVABILITY:

Alphabetically by title and claimant's name.

SAFEGUARDS:

These records are maintained in a room which is restricted to authorized personnel and locked during nonworking hours.

RETENTION AND DISPOSAL:

Retained indefinitely.

SYSTEM MANAGER(S) AND ADDRESS:

Chief, Copyright Acquisitions Division, Copyright Office, Library of Congress, Washington, DC 20559–6600.

NOTIFICATION PROCEDURE:

Inquiries about an individual's record should be in writing addressed to the

Supervisory Copyright Information Specialist, Information Section, Information and Reference Division, Copyright Office, Library of Congress, Washington, DC 20559–6000.

RECORD ACCESS PROCEDURES:

Requests from individuals should be in writing addressed to the official designated under ''Notification Procedure.''

CONTESTING RECORD PROCEDURES:

See rules published in 37 CFR part 204.

RECORD SOURCE CATEGORIES:

Printed bibliographies, publishers' catalogs, citations provided by the Library of Congress, published citations of the work, and Office personnel who have personally observed the item cited.

CO–8

SYSTEM NAME:

Freedom of Information Act and Privacy Act Requests and Disclosures File.

SYSTEM LOCATION:

Copyright Office, Library of Congress, Washington, DC 20559–6000.

CATEGORIES OF INDIVIDUALS COVERED BY THE SYSTEM:

Individuals who have submitted Freedom of Information Act and/or Privacy Act requests in accordance with 37 CFR parts 203 and 204.

CATEGORIES OF RECORDS IN THE SYSTEM:

Requests submitted under the Freedom of Information Act and/or Privacy Act; requests submitted under the Privacy Act for correction or amendment of Office records, and copies of the Office's responses to these requests.

AUTHORITY FOR MAINTENANCE OF THE SYSTEM:

17 U.S.C. 701; 5 U.S.C. 552, 552a.

ROUTINE USES OF RECORDS MAINTAINED IN THE SYSTEM, INCLUDING CATEGORIES OF USERS AND THE PURPOSES OF SUCH USES:

The Office uses these records to: (1) Maintain an accounting of Freedom of Information Act and/or Privacy Act requests and Office responses to these requests; (2) maintain an accounting of requests submitted under the Privacy Act to correct or amend a record pertaining to an individual and the Office responses to these requests; (3) compile the annual report required by the Freedom of Information Act; and (4) review and compile the records report required by the Privacy Act.

POLICIES AND PRACTICES FOR STORING, RETRIEVING, ACCESSING, RETAINING, AND DISPOSING OF RECORDS IN THE SYSTEM:

STORAGE:

Folders in a file cabinet, information on PC databases.

RETRIEVABILITY:

Alphabetically by requester's name.

SAFEGUARDS:

Records are maintained in a room which is restricted to authorized personnel and locked during nonworking hours.

RETENTION AND DISPOSAL:

Retained indefinitely.

SYSTEM MANAGER(S) AND ADDRESS:

Section Head, Information Section, Information and Reference Division, Copyright Office, Library of Congress, Washington, DC 20559–6000.

NOTIFICATION PROCEDURE:

Inquiries about an individual's record should be in writing addressed to the Supervisory Copyright Information Specialist, Information Section, Information and Reference Division, Copyright Office, Library of Congress, Washington, DC 20559–6000.

RECORD ACCESS PROCEDURES:

Requests from individuals should be in writing addressed to the official designated under ''Notification Procedure.''

CONTESTING RECORD PROCEDURES:

See rules published in 37 CFR part 204.

RECORD SOURCE CATEGORIES:

Individuals to whom the record pertains, and Copyright Office records.

CO–9

SYSTEM NAME:

Freedom of Information Act Annual Reports.

SYSTEM LOCATION:

Copyright Office, Library of Congress, Washington, DC 20559–6000.

CATEGORIES OF RECORDS IN THE SYSTEM:

Reports compiled by the Supervisory Copyright Information Specialist and submitted to Congress and/or the U.S. Attorney General summarizing the number of requests made to the Copyright Office under the Freedom of Information and the nature of the responses to these requests.

AUTHORITY FOR MAINTENANCE OF THE SYSTEM:

17 U.S.C. 701; 5 U.S.C. 552.

ROUTINE USES OF RECORDS MAINTAINED IN THE SYSTEM, INCLUDING CATEGORIES OF USERS AND THE PURPOSES OF SUCH USES:

Reports submitted annually to Congress and/or the U.S. Attorney General summarizing the number of requests made to the Copyright Office under the Freedom of Information and the nature of the responses to these requests.

POLICIES AND PRACTICES FOR STORING, RETRIEVING, ACCESSING, RETAINING, AND DISPOSING OF RECORDS IN THE SYSTEM:

STORAGE:

Folders in a file cabinet.

RETRIEVABILITY:

Chronologically, by year.

SAFEGUARDS:

These records are maintained in a room which is restricted to authorized personnel and locked during nonworking hours.

RETENTION AND DISPOSAL:

Retained indefinitely.

SYSTEM MANAGER(S) AND ADDRESS:

Section Head, Information Section, Information and Reference Division, Copyright Office, Library of Congress, Washington, DC 20559–6000.

NOTIFICATION PROCEDURE:

Inquiries about an individual's record should be in writing addressed to the Supervisory Copyright Information Specialist, Information Section, Information and Reference Division, Copyright Office, Library of Congress, Washington, DC 20559–6000.

RECORD ACCESS PROCEDURES:

Requests from individuals should be in writing addressed to the official designated under ''Notification Procedure.''

CONTESTING RECORD PROCEDURES:

See rules published in 37 CFR part 204.

RECORD SOURCE CATEGORIES:

Individuals to whom the record pertains, and Copyright Office records.

CO–10

SYSTEM NAME:

Address File.

SYSTEM LOCATION:

Copyright Office, Library of Congress, Washington, DC 20559–6000.

CATEGORIES OF INDIVIDUALS COVERED BY THE SYSTEM:

Copyright claimants of record whose address has been requested by a member of the public.

CATEGORIES OF RECORDS IN THE SYSTEM:

Name and address of claimant of record, year date of address.

AUTHORITY FOR MAINTENANCE OF THE SYSTEM:

17 U.S.C. 407, 705.

ROUTINE USES OF RECORDS MAINTAINED IN THE SYSTEM, INCLUDING CATEGORIES OF USERS AND THE PURPOSES OF SUCH USES:

The Office uses these records to facilitate searching for addresses of copyright claimants when such addresses are requested by a member of the public.

POLICIES AND PRACTICES FOR STORING, RETRIEVING, ACCESSING, RETAINING, AND DISPOSING OF RECORDS IN THE SYSTEM:

STORAGE:

3 × 5 inch index cards in file drawer.

RETRIEVABILITY:

Alphabetically by claimant of record's name.

SAFEGUARDS:

These records are maintained in a room which is restricted to authorized personnel and is locked during nonworking hours.

RETENTION AND DISPOSAL:

Retained indefinitely; however, obsolete addresses are disposed of as more current addresses are obtained.

SYSTEM MANAGER(S) AND ADDRESS:

Section Head, Reference and Bibliography Section, Information and Reference Division, Copyright Office, Library of Congress, Washington, DC 20559–6000.

NOTIFICATION PROCEDURE:

Inquiries about an individual's record should be in writing addressed to the Supervisory Copyright Information Specialist, Information Section, Information and Reference Division, Copyright Office, Library of Congress, Washington, DC 20559–6000.

RECORD ACCESS PROCEDURES:

Requests from individuals should be in writing addressed to the official designated under ''Notification Procedure.''

CONTESTING RECORD PROCEDURES:

See rules published in 37 CFR part 204.

RECORD SOURCE CATEGORIES:

Copyright claimants, their authorized agents, telephone books, and city directories.

CO–11

SYSTEM NAME:

Secondary Transmissions by Cable Systems: Statements of Account.

SYSTEM LOCATION:

Copyright Office, Library of Congress, Washington, DC 20559–6000.

CATEGORIES OF INDIVIDUALS COVERED BY THE SYSTEM:

Owners of cable systems who file semi-annual statements of account required by 17 U.S.C. 111(d)(2).

CATEGORIES OF RECORDS IN THE SYSTEM:

Legal names and addresses of owners of cable systems, call signs and locations of primary transmitters and related correspondence.

AUTHORITY FOR MAINTENANCE OF THE SYSTEM:

17 U.S.C. 111(d)(2).

ROUTINE USES OF RECORDS MAINTAINED IN THE SYSTEM, INCLUDING CATEGORIES OF USERS AND THE PURPOSES OF SUCH USES:

The Office uses these records to: (1) Prepare search reports compiled at the request of a member of the public; and (2) establish and maintain a public record.

POLICIES AND PRACTICES FOR STORING, RETRIEVING, ACCESSING, RETAINING, AND DISPOSING OF RECORDS IN THE SYSTEM:

STORAGE:

Folders in a file cabinet and, after three years, microfilm.

RETRIEVABILITY:

Alphabetically by legal name of the owner of the cable system, grouped according to accounting period and year.

SAFEGUARDS:

These records are maintained in a room which is restricted to authorized personnel and locked during nonworking hours.

RETENTION AND DISPOSAL:

Retained indefinitely.

SYSTEM MANAGER(S) AND ADDRESS:

Chief, Licensing Division, Copyright Office, Library of Congress, Washington, DC 20557–6400.

NOTIFICATION PROCEDURE:

Inquiries about an individual's record should be in writing addressed to the Supervisory Copyright Information Specialist, Information Section, Information and Reference Division, Copyright Office, Library of Congress, Washington, DC 20559–6000.

RECORD ACCESS PROCEDURES:

Requests from individuals should be in writing addressed to the official designated under ''Notification Procedure.''

CONTESTING RECORD PROCEDURES:

See rules published in 37 CFR part 204.

RECORD SOURCE CATEGORIES:

Individual to whom the record pertains or such individual's authorized agent.

CO–12

SYSTEM NAME:

Secondary Transmissions by Satellite Carriers for Private Home Viewing: Statements of Account.

SYSTEM LOCATION:

Copyright Office, Library of Congress, Washington, DC 20059–6000.

CATEGORIES OF INDIVIDUALS COVERED BY THE SYSTEM:

Owners of satellite carriers who file semi-annual statements of account required by 17 U.S.C. 119(b)(1).

CATEGORIES OF RECORDS IN THE SYSTEM:

Legal names and addresses of owners of satellite systems that retransmit superstations and network television signals to subscribers for private home viewing together with the number of subscribers that received such transmissions, and related correspondence.

AUTHORITY FOR MAINTENANCE OF THE SYSTEM:

17 U.S.C. 119(b)(2).

ROUTINE USES OF RECORDS MAINTAINED IN THE SYSTEM, INCLUDING CATEGORIES OF USERS AND THE PURPOSES OF SUCH USES:

The Office uses these records to: (1) Prepare search reports compiled at the request of a member of the public; (2) establish and maintain a public record; and (3) prepare internal statistical and accounting reports.

POLICIES AND PRACTICES FOR STORING, RETRIEVING, ACCESSING, RETAINING, AND DISPOSING OF RECORDS IN THE SYSTEM:

STORAGE:

Folders in a file cabinet and, after three years, microfilm.

RETRIEVABILITY:

Alphabetically by legal name of the owner of the satellite carrier, grouped according to accounting period and year.

SAFEGUARDS:

Records are maintained in a room which is restricted to authorized personnel and locked during nonworking hours.

RETENTION AND DISPOSAL:

Retained indefinitely.

SYSTEM MANAGER(S) AND ADDRESS:

Chief, Licensing Division, Copyright Office, Library of Congress, Washington, DC 20557–6400.

NOTIFICATION PROCEDURE:

Inquiries about an individual's record should be in writing addressed to the Supervisory Copyright Information Specialist, Information Section, Information and Reference Division, Copyright Office, Library of Congress, Washington, DC 20559–6000.

RECORD ACCESS PROCEDURES:

Requests from individuals should be in writing addressed to the official designated under ''Notification Procedure.''

CONTESTING RECORD PROCEDURES:

See rules published in 37 CFR part 204.

RECORD SOURCE CATEGORIES:

Individual to whom the record pertains or such individual's authorized agent.

CO–13

SYSTEM NAME:

Licensing Division Correspondence File.

SYSTEM LOCATION:

Copyright Office, Library of Congress, Washington, DC 20559–6000.

CATEGORIES OF INDIVIDUALS COVERED BY THE SYSTEM:

Individuals who send letters of transmittal and other incidental Licensing Division correspondence.

CATEGORIES OF RECORDS IN THE SYSTEM:

General correspondence.

AUTHORITY FOR MAINTENANCE OF THE SYSTEM:

17 U.S.C. 111, 115, 116, 118, 705.

ROUTINE USES OF RECORDS MAINTAINED IN THE SYSTEM, INCLUDING CATEGORIES OF USERS AND THE PURPOSES OF SUCH USES:

The Office uses these records to maintain a record of incidental correspondence with the Licensing Division.

POLICIES AND PRACTICES FOR STORING, RETRIEVING, ACCESSING, RETAINING, AND DISPOSING OF RECORDS IN THE SYSTEM:

STORAGE:

Folders in file cabinet.

RETRIEVABILITY:

Alphabetically by correspondent's name.

SAFEGUARDS:

These records are maintained in a room which is restricted to authorized personnel and locked during nonworking hours.

RETENTION AND DISPOSAL:

Records are kept in the open file until a reply is received or until the case is closed. Records in the closed file are retained indefinitely.

SYSTEM MANAGER(S) AND ADDRESS:

Chief, Licensing Division, Copyright Office, Library of Congress, Washington, DC 20557–6400.

NOTIFICATION PROCEDURE:

Inquiries about an individual's record should be in writing addressed to the Supervisory Copyright Information Specialist, Information Section, Information and Reference Division, Copyright Office, Library of Congress, Washington, DC 20559–6000.

RECORD ACCESS PROCEDURES:

Requests from individuals should be in writing addressed to the official designated under ''Notification procedure.''

CONTESTING RECORD PROCEDURES:

See rules published in 37 CFR part 204.

RECORD SOURCE CATEGORIES:

Individual to whom the record pertains or such individual's authorized agent.

CO–14

SYSTEM NAME:

Secondary Transmissions by Cable Systems: Correspondence Files.

SYSTEM LOCATION:

Copyright Office, Library of Congress, Washington, DC 20559–6000.

CATEGORIES OF INDIVIDUALS COVERED BY THE SYSTEM:

Cable systems owners and other individuals who correspond with the Licensing Division, the Copyright Office General Counsel, or the Register of Copyrights concerning the administration of the cable compulsory licensing system in section 111 of title 17 U.S.C.

CATEGORIES OF RECORDS IN THE SYSTEM:

Correspondence, including advisory letters regarding inquiries into administration of compulsory licenses.

AUTHORITY FOR MAINTENANCE OF THE SYSTEM:

17 U.S.C. 111, 705.

ROUTINE USES OF RECORDS MAINTAINED IN THE SYSTEM, INCLUDING CATEGORIES OF USERS AND THE PURPOSES OF SUCH USES:

The Office maintains these records to facilitate public access to correspondence of the Licensing Division, Copyright Office General Counsel and the Register of Copyrights on the administration of the section 111 compulsory licensing system.

POLICIES AND PRACTICES FOR STORING, RETRIEVING, ACCESSING, RETAINING, AND DISPOSING OF RECORDS IN THE SYSTEM:

STORAGE:

Folders in a file cabinet and binders.

RETRIEVABILITY:

Correspondence usually accessible by date letter sent to member of public.

SAFEGUARDS:

These records are maintained in a room which is restricted to authorized personnel and locked during nonworking hours.

RETENTION AND DISPOSAL:

Records are retained indefinitely.

SYSTEM MANAGER(S) AND ADDRESS:

Chief, Licensing Division, Copyright Office, Library of Congress, Washington, DC 20557–6400.

NOTIFICATION PROCEDURE:

Inquiries about an individual's record should be in writing addressed to the Supervisory Copyright Information Specialist, Information Section, Information and Reference Division, Copyright Office, Library of Congress, Washington, DC 20559–6000.

RECORD ACCESS PROCEDURES:

Requests from individuals should be in writing addressed to the official designated under ''Notification procedure.''

CONTESTING RECORD PROCEDURES:

See rules published in 37 CFR part 204.

RECORD SOURCE CATEGORIES:

Licensing Division personnel, the Copyright Office General Counsel, and the Register of Copyrights.

CO–15

SYSTEM NAME:

Cable System Videotape Transfer Contracts File.

SYSTEM LOCATION:

Copyright Office, Library of Congress, Washington, DC 20559–6000.

CATEGORIES OF INDIVIDUALS COVERED BY THE SYSTEM:

Individuals to whom a cable system has transferred a videotape of a program nonsimultaneously transmitted by it pursuant to a written, nonprofit contract providing for the equitable sharing of costs of such videotape and its transfer.

CATEGORIES OF RECORDS IN THE SYSTEM:

Transferor, transferee, title, date contract effective, date of recordation, location of cable system, notation of

acknowledgement of receipt by the Copyright Office, related correspondence.

AUTHORITY FOR MAINTENANCE OF THE SYSTEM:

17 U.S.C. 111(e)(2)(A).

ROUTINE USES OF RECORDS MAINTAINED IN THE SYSTEM, INCLUDING CATEGORIES OF USERS AND THE PURPOSES OF SUCH USES:

The Office uses these records to: (1) Prepare search reports compiled at the request of a member of the public; and (2) establish and maintain a public record.

POLICIES AND PRACTICES FOR STORING, RETRIEVING, ACCESSING, RETAINING, AND DISPOSING OF RECORDS IN THE SYSTEM:

STORAGE:

Folders in file cabinet and on microfilm.

SAFEGUARDS:

Records are maintained in a room which is restricted to authorized personnel and locked during nonworking hours.

RETENTION AND DISPOSAL:

Retained indefinitely.

SYSTEM MANAGER(S) AND ADDRESS:

Chief, Licensing Division, Copyright Office, Library of Congress, Washington, DC 20557–6400.

NOTIFICATION PROCEDURE:

Inquiries about an individual's record should be in writing addressed to the Supervisory Copyright Information Specialist, Information Section, Information and Reference Division, Copyright Office, Library of Congress, Washington, DC 20559–6000.

RECORD ACCESS PROCEDURES:

Requests from individuals should be in writing addressed to the official designated under ''Notification Procedure.''

CONTESTING RECORD PROCEDURES:

See rules published in 37 CFR part 204.

RECORD SOURCE CATEGORIES:

Parties to the transfer contracts or such parties' authorized agents.

CO–16

SYSTEM NAME:

Network Name and Address File for Satellite Carrier Statutory License.

SYSTEM LOCATION:

Copyright Office, Library of Congress, Washington, DC 20559–6000.

CATEGORIES OF INDIVIDUALS COVERED BY THE SYSTEM:

Television networks and individuals to whom a satellite carrier files a list identifying all subscribers to which the satellite carrier makes secondary transmissions of that network's primary transmission.

CATEGORIES OF RECORDS IN THE SYSTEM:

Name of the television network, the contact person, a full mailing address, telephone number and related information required by 17 U.S.C. 119(a)(2)(C).

AUTHORITY FOR MAINTENANCE OF THE SYSTEM:

17 U.S.C. 119(a)(2)(C).

ROUTINE USES OF RECORDS MAINTAINED IN THE SYSTEM, INCLUDING CATEGORIES OF USERS AND THE PURPOSES OF SUCH USES:

The Office uses these records to: (1) Prepare search reports compiled at the request of a member of the public; and (2) establish and maintain a public record.

POLICIES AND PRACTICES FOR STORING, RETRIEVING, ACCESSING, RETAINING AND DISPOSING OF RECORDS IN THE SYSTEM:

STORAGE:

Folders in a file cabinet.

RETRIEVABILITY:

Alphabetically by legal name of the network owner.

SAFEGUARDS:

These records are maintained in a room restricted to authorized personnel and locked during nonworking hours.

RETENTION AND DISPOSAL:

Retained indefinitely.

SYSTEM MANAGER(S) AND ADDRESS:

Chief, Licensing Division, Copyright Office, Library of Congress, Washington, DC 20557–6400.

NOTIFICATION PROCEDURE:

Inquiries about an individual's record should be in writing addressed to the Supervisory Copyright Information Specialist, Information Section, Information and Reference Division, Copyright Office, Library of Congress, Washington, DC 20559–6000.

RECORD ACCESS PROCEDURES:

Requests from individuals should be in writing addressed to the official designated under ''Notification Procedure.''

CONTESTING RECORD PROCEDURES:

See rules published in 37 CFR part 204.

RECORD SOURCE CATEGORIES:

Any individual to whom the record pertains or such individual's authorized agent.

CO–17

SYSTEM NAME:

Voluntary Licensing Agreements File.

SYSTEM LOCATION:

Copyright Office, Library of Congress, Washington, DC 20559–6000.

CATEGORIES OF INDIVIDUALS COVERED BY THE SYSTEM:

Individuals who submit for recordation voluntary licensing agreements between: (1) Copyright owners of published nondramatic musical works and published pictorial, graphic, and sculptural works and public broadcasting entities; and (2) copyright owners of nondramatic literary works and public broadcasting entities.

CATEGORIES OF RECORDS IN THE SYSTEM:

Copies of actual agreements submitted for recordation, copies of registration certificates of record, and related correspondence.

AUTHORITY FOR MAINTENANCE OF THE SYSTEM:

17 U.S.C. 118(b)(2), 118(e)(1).

ROUTINE USES OF RECORDS MAINTAINED IN THE SYSTEM, INCLUDING CATEGORIES OF USERS AND THE PURPOSES OF SUCH USES:

The Office uses these records to: (1) Prepare search reports compiled at the request of a member of the public; (2) prepare internal statistical reports; and (3) establish and maintain a public record.

POLICIES AND PRACTICES FOR STORING, RETRIEVING, ACCESSING, RETAINING, AND DISPOSING OF RECORDS IN THE SYSTEM:

STORAGE:

Folders in a file cabinet and on microfilm.

RETRIEVABILITY:

Alphabetically by names of copyright owners and public broadcasting entities.

SAFEGUARDS:

These records are maintained in a room which is restricted to authorized personnel and locked during nonworking hours.

RETENTION AND DISPOSAL:

Retained indefinitely.

SYSTEM MANAGER(S) AND ADDRESS:

Chief, Licensing Division, Copyright Office, Library of Congress, Washington, DC 20557–6400.

NOTIFICATION PROCEDURE:

Inquiries about an individual's record should be in writing addressed to the Supervisory Copyright Information Specialist, Information Section, Information and Reference Division, Copyright Office, Library of Congress, Washington, DC 20559–6000.

RECORD ACCESS PROCEDURES:

Requests from individuals should be in writing addressed to the official designated under ''Notification Procedure.''

CONTESTING RECORD PROCEDURES:

See rules published in 37 CFR part 204.

RECORD SOURCE CATEGORIES:

Parties to voluntary licensing agreements or such parties' authorized agents.

CO–18

SYSTEM NAME:

Satellite Carrier Voluntary Agreements File.

SYSTEM LOCATION:

Copyright Office, Library of Congress, Washington, DC 20559–6000.

CATEGORIES OF INDIVIDUALS COVERED BY THE SYSTEM:

Satellite carriers, distributors, and copyright owners.

CATEGORIES OF RECORDS IN THE SYSTEM:

Copies of actual agreements submitted and related correspondence.

AUTHORITY FOR MAINTENANCE OF THE SYSTEM:

17 U.S.C. 119(c)(2)(C).

ROUTINE USES OF RECORDS MAINTAINED IN THE SYSTEM, INCLUDING CATEGORIES OF USERS AND THE PURPOSES OF SUCH USES:

The Office uses these records to: (1) Prepare search reports complied at the request of a member of the public; and (2) establish and maintain a public record.

POLICIES AND PRACTICES FOR STORING, RETRIEVING, ACCESSING, RETAINING AND DISPOSING OF RECORDS IN THE SYSTEM:

STORAGE:

Folders in a file cabinet.

RETRIEVABILITY:

Alphabetically by legal name of the owner of the satellite carrier, distributor, and copyright owner.

SAFEGUARDS:

These records are maintained in a room restricted to authorized personnel and locked during nonworking hours.

RETENTION AND DISPOSAL:

Retained indefinitely.

SYSTEM MANAGER(S) AND ADDRESS:

Chief, Licensing Division, Copyright Office, Library of Congress, Washington, DC 20557–6400.

NOTIFICATION PROCEDURE:

Inquiries about an individual's record should be in writing addressed to the Supervisory Copyright Information Specialist, Information Section, Information and Reference Division, Copyright Office, Library of Congress, Washington, DC 20559–6000.

RECORD ACCESS PROCEDURES:

Requests from individuals should be in writing addressed to the official designated under ''Notification Procedure.''

CONTESTING RECORD PROCEDURES:

See rules published in 37 CFR part 204.

RECORD SOURCE CATEGORIES:

Any individual to whom the record pertains or such individual's authorized agent.

CO–19

SYSTEM NAME:

Notice of Intention to Obtain Compulsory License for Making and Distributing Phonorecords Embodying Nondramatic Musical Works File.

SYSTEM LOCATION:

Copyright Office, Library of Congress, Washington, DC 20559–6000.

CATEGORIES OF INDIVIDUALS COVERED BY THE SYSTEM:

Individuals who file a notice of their intention to obtain a compulsory license for making and distributing phonorecords embodying nondramatic musical works.

CATEGORIES OF RECORDS IN THE SYSTEM:

Individual's name, name of copyright owner, titles, date of recordation of notice, internal notation of date upon which the Office informally acknowledged receipt of the notice.

AUTHORITY FOR MAINTENANCE OF THE SYSTEM:

17 U.S.C. 115(b)(1).

ROUTINE USES OF RECORDS MAINTAINED IN THE SYSTEM, INCLUDING CATEGORIES OF USERS AND THE PURPOSES OF SUCH USES:

The Office uses these records to: (1) Prepare search reports compiled at the request of a member of the public; (2) establish and maintain a public record; and (3) prepare internal statistical reports.

POLICIES AND PRACTICES FOR STORING, RETRIEVING, ACCESSING, RETAINING, AND DISPOSING OF RECORDS IN THE SYSTEM:

STORAGE:

Folders in file cabinet.

RETRIEVABILITY:

Alphabetically by name of remitter and name of copyright owner.

SAFEGUARDS:

These records are maintained in a room which is restricted to authorized personnel and locked during nonworking hours.

RETENTION AND DISPOSAL:

Retained indefinitely.

SYSTEM MANAGER(S) AND ADDRESS:

Chief, Licensing Division, Copyright Office, Library of Congress, Washington, DC 20557–6400.

NOTIFICATION PROCEDURE:

Inquiries about an individual's record should be in writing addressed to the Supervisory Copyright Information Specialist, Information Section, Information and Reference Division, Copyright Office, Library of Congress, Washington, DC 20559–6000.

RECORD ACCESS PROCEDURES:

Requests from individuals should be in writing addressed to the official designated under ''Notification procedure.''

CONTESTING RECORD PROCEDURES:

See rules published in 37 CFR part 204.

RECORD SOURCE CATEGORIES:

Individual to whom the record pertains or such individual's authorized agent.

CO–20

SYSTEM NAME:

Annual list of claimants to the satellite carrier statutory license royalties.

SYSTEM LOCATION:

Copyright Office, Library of Congress, Washington, DC.

CATEGORIES OF INDIVIDUALS COVERED BY THE SYSTEM:

Copyright owners who claim to be entitled to statutory license fees for secondary transmissions by satellite carriers for private home viewing.

CATEGORIES OF RECORDS IN THE SYSTEM:

Legal name and address of claimant, example of a secondary transmission forming the basis of the claim, and related information required under 37 CFR part 257.

AUTHORITY FOR MAINTENANCE OF THE SYSTEM:

17 U.S.C. 119(b)(4)(A).

ROUTINE USES OF RECORDS MAINTAINED IN THE SYSTEM, INCLUDING CATEGORIES OF USERS AND THE PURPOSES OF SUCH USES:

The Office uses these records to: (1) Identify the claimants who assert a claim in a particular calendar year to the royalty fees collected under the satellite carrier compulsory license, (2) review compliance with the filing regulations, 37 CFR part 257, and (3) establish and maintain a public file.

POLICIES AND PRACTICES FOR STORING, RETRIEVING, ACCESSING, RETAINING, AND DISPOSING OF RECORDS IN THE SYSTEM:

STORAGE:

Folders in a file cabinet.

RETRIEVABILITY:

Listed by claimant name in order of receipt.

SAFEGUARDS:

The records are maintained in a room restricted to authorized personnel and locked during nonworking hours.

RETENTION AND DISPOSAL:

Retained indefinitely.

SYSTEM MANAGER(S) AND ADDRESS:

Copyright General Counsel, Copyright Office, Library of Congress, Washington, DC 20559–6000.

NOTIFICATION PROCEDURES:

Inquiries about an individual's record should be in writing addressed to the CARP Specialist, Copyright/GC/CARP, PO Box 70997, Southwest Station, Washington, DC 20024.

RECORD ACCESS PROCEDURES:

Request from individuals should be in writing addressed to the official designated under ''Notification procedures.''

CONTESTING RECORD PROCEDURES:

See rules published in 37 CFR part 204.

RECORD SOURCE CATEGORIES:

Individuals to whom record pertains or such individual's authorized agent.

CO–21

SYSTEM NAME:

Annual list of claimants to the cable compulsory license royalties.

SYSTEM LOCATION:

Copyright Office, Library of Congress, Washington, DC 20559–6000.

CATEGORIES OF RECORDS IN THE SYSTEM:

Copyright owners who claim to be entitled to statutory license fees for secondary transmissions of broadcast signals by a cable system.

CATEGORIES OF RECORDS IN THE SYSTEM:

Legal name and address of claimant, example of a secondary transmission forming the basis of the claim, and related information required under 37 CFR part 253.

AUTHORITY FOR MAINTENANCE OF THE SYSTEM:

17 U.S.C. 111(d)(4)(A).

ROUTINE USES OF RECORDS MAINTAINED IN THE SYSTEM, INCLUDING CATEGORIES OF USERS AND THE PURPOSES OF SUCH USES:

The Office uses these records to: (1) Identify the claimants who assert a claim in a particular calendar year to the royalty fees collected under the cable compulsory license; (2) review compliance with the filing regulations, 37 CFR part 257, and (3) establish and maintain a public file.

POLICIES AND PRACTICES FOR STORING, RETRIEVING, ACCESSING, RETAINING, AND DISPOSING OF RECORDS IN THE SYSTEM:

STORAGE:

Folders in a file cabinet.

RETRIEVABILITY:

Listed by claimant name in order of receipt.

SAFEGUARDS:

The records are maintained in a room restricted to authorized personnel and locked during nonworking hours.

RETENTION AND DISPOSAL:

Retained indefinitely.

SYSTEM MANAGER(S) AND ADDRESS:

Copyright General Counsel, Copyright Office, Library of Congress, Washington DC 20559–6000.

NOTIFICATION PROCEDURES:

Inquiries about an individual's record should be in writing addressed to the CARP Specialist, Copyright/GC/CARP, PO Box 70997, Southwest Station, Washington, DC 20024.

RECORD ACCESS PROCEDURES:

Request from individuals should be in writing addressed to the official designated under ''Notification Procedure.''

CONTESTING RECORD PROCEDURES:

See rules published in 37 CFR part 204.

RECORD SOURCE CATEGORIES:

Individuals to whom the record pertains or such individual's authorized agent.

CO–22

SYSTEM NAME:

Annual list of claimants to the digital audio recording technology (DART) royalties.

SYSTEM LOCATION:

Copyright Office, Library of Congress, Washington, DC 20559–6000.

CATEGORIES OF INDIVIDUALS COVERED BY THE SYSTEM:

Interested copyright parties who claim to be entitled to statutory license fees because their musical works or sound recordings have been embodied in digital or analog musical recordings and distributed to the public in transmissions.

CATEGORIES OF RECORDS IN THE SYSTEM:

Legal name and address of claimant, example of a sound recording forming the basis of the claim, and related information required under 37 CFR part 259.

AUTHORITY FOR MAINTENANCE OF THE SYSTEM:

17 U.S.C. 1007(a)(1).

ROUTINE USES OF RECORDS MAINTAINED IN THE SYSTEM, INCLUDING CATEGORIES OF USERS AND THE PURPOSES OF SUCH USES:

The Office uses these records to: (1) Identify the claimants who asserted claims in a particular calendar year to the royalty fees collected under the Audio Home Recording Act of 1992; (2) review compliance with the filing regulations; and (3) establish and maintain a public file.

POLICIES AND PRACTICES FOR STORING, RETRIEVING, ACCESSING, RETAINING, AND DISPOSING OF RECORDS IN THE SYSTEM:

STORAGE:

Folders in a file cabinet.

RETRIEVABILITY:

Listed by claimant name according to fund and subfund in order of receipt.

SAFEGUARDS:

The records are maintained in a room restricted to authorized personnel and locked during nonworking hours.

RETENTION AND DISPOSAL:

Retained indefinitely.

SYSTEM MANAGER(S) AND ADDRESS:

Copyright General Counsel, Copyright Office, Library of Congress, Washington DC 20559–6000.

NOTIFICATION PROCEDURES:

Inquiries about an individual's record should be in writing addressed to the CARP Specialist, Copyright Office/GC/CARP, PO Box 70977, Southwest Station, Washington, DC 20024.

RECORD ACCESS PROCEDURES:

Request from individuals should be in writing addressed to the official designated under ''Notification Procedure.''

CONTESTING RECORD PROCEDURES:

See rules published in 37 CFR part 204.

RECORD SOURCE CATEGORIES:

Any individual to whom the record pertains or such individual's authorized agent.

CO–23

SYSTEM NAME:

Records of proceedings to distribute royalty fees or adjust royalty rates.

SYSTEM LOCATION:

Copyright Office, Library of Congress, Washington, DC 20559–6000.

CATEGORIES OF INDIVIDUALS COVERED BY THE SYSTEM:

Copyright owners who are entitled to receive statutory license fees and entities which pay the statutory fees.

CATEGORIES OF RECORDS IN THE SYSTEM:

Petitions to initiate proceeding, legal filings, orders, transcripts, report of arbitration panel, and all other documents related to a distribution or rate adjustment proceeding.

AUTHORITY FOR MAINTENANCE OF THE SYSTEM:

17 U.S.C. 802(c).

ROUTINE USES OF RECORDS MAINTAINED IN THE SYSTEM, INCLUDING CATEGORIES OF USERS AND THE PURPOSES OF SUCH USES:

The Office uses these records to: (1) Document distribution and rate adjustment proceedings; (2) create a written record for review by the U.S. Court of Appeals; and (3) establish and maintain a public file.

POLICIES AND PRACTICES FOR STORING, RETRIEVING, ACCESSING, RETAINING, AND DISPOSING OF RECORDS IN THE SYSTEM:

STORAGE:

Folders in a file cabinet.

RETRIEVABILITY:

Docket number, date of filing, party name, and type of filing.

SAFEGUARDS:

The records are maintained in a room restricted to authorized personnel and locked during nonworking hours.

RETENTION AND DISPOSAL:

Retained indefinitely.

SYSTEM MANAGER(S) AND ADDRESS:

Copyright General Counsel, Library of Congress, Washington DC 20559–6000.

NOTIFICATION PROCEDURES:

Inquiries about an individual's record should be in writing addressed to the Supervisory Copyright Information Specialist, Information Section, Information and Reference Division, Copyright Office, Library of Congress, Washington, DC 20559–6000.

RECORD ACCESS PROCEDURES:

Request from individuals should be in writing addressed to the official designated under ''Notification Procedure.''

CONTESTING RECORD PROCEDURES:

See rules published in 37 CFR part 204.

RECORD SOURCE CATEGORIES:

Parties who participate in the distribution or rate adjustment proceeding.

CO–24

SYSTEM NAME:

Licensing Division File of Specialty Station Claimants

SYSTEM LOCATION:

Copyright Office, Library of Congress, Washington, DC 20559–6000.

CATEGORIES OF INDIVIDUALS COVERED BY THE SYSTEM:

Copyright owners who claim specialty station status for purposes of administration of 17 U.S.C. 111.

CATEGORIES OF RECORDS IN THE SYSTEM:

Affidavits from broadcast television stations that claim specialty station status due to carriage of former Federal Communications Commission rules at 47 CFR 76.5(kk)(1981).

AUTHORITY FOR MAINTENANCE OF THE SYSTEM:

17 U.S.C. 701.

ROUTINE USES OF RECORDS MAINTAINED IN THE SYSTEM, INCLUDING CATEGORIES OF USERS AND THE PURPOSES OF SUCH USES:

The Office uses these records to: (1) Administer the provisions of the cable compulsory license, 17 USC 111; and (2) establish and maintain a public file available for review to verify facts in filings.

POLICIES AND PRACTICES FOR STORING, RETRIEVING, ACCESSING, RETAINING, AND DISPOSING OF RECORDS IN THE SYSTEM:

STORAGE:

Folders in a file cabinet.

RETRIEVABILITY:

By station call letters.

SAFEGUARDS:

The records are maintained in a room restricted to authorized personnel and locked during nonworking hours.

RETENTION AND DISPOSAL:

Retained indefinitely.

SYSTEM MANAGER(S) AND ADDRESS:

Chief of Licensing Division, Copyright Office, Library of Congress, Washington DC 20557–6400.

NOTIFICATION PROCEDURES:

Inquiries about an individual's record should be in writing addressed to the CARP Specialist, Copyright GC/CARP, PO Box 70977, Southwest Station, Washington, DC 20024.

RECORD ACCESS PROCEDURES:

Request from individuals should be in writing addressed to the official designated under ''Notification Procedure.''

CONTESTING RECORD PROCEDURES:

See rules published in 37 CFR part 204.

RECORD SOURCE CATEGORIES:

Broadcast television stations that claim specialty station status and file affidavits to that effect with the Copyright Office.

CO–25

SYSTEM NAME:

Mask Work Registration Files.

SYSTEM LOCATION:

Copyright Office, Library of Congress, Washington, DC 20557.

CATEGORIES OF INDIVIDUALS COVERED BY THE SYSTEM:

Mask work owners, applicants for mask work registration, or the authorized agents of such individuals.

CATEGORIES OF RECORDS IN THE SYSTEM:

Names and addresses of mask work owners; certified statements pertaining to creation, commercial exploitation, ownership, and other registration-related information; general correspondence pertaining to registration of mask work claims.

AUTHORITY FOR MAINTENANCE OF THE SYSTEM:

17 U.S.C. 908(b), 705.

ROUTINE USES OF RECORDS MAINTAINED IN THE SYSTEM, INCLUDING CATEGORIES OF USERS AND THE PURPOSES OF SUCH USES:

The Office uses these records to: (1) Prepare search reports at the request of a member of the public; (2) respond to requests by the public for information; (3) correspond with applicants or otherwise process applications and related materials; (4) monitor and control the flow of work in the Office; and (5) establish and maintain a public record. It is the general policy of the

Copyright Office to deny direct public inspection of in-process application forms and correspondence, and any related material forming part of a pending application, except upon the request of the mask work owner or his/her authorized representative. Once registration of a claim to mask work protection has been completed or refused at the final agency level, the registration and correspondence records pertaining to that claim are open for public inspection from 8:30 a.m. to 5 p.m., Monday through Friday, except legal holidays.

POLICIES AND PRACTICES FOR STORING, RETRIEVING, ACCESSING, RETAINING, AND DISPOSING OF RECORDS IN THE SYSTEM:

STORAGE:

Envelopes in file cabinets and on shelves; computer tapes and discs; and microform.

RETRIEVABILITY:

By registration number, cross-referenced by name of owner and title of work in the automated or microform catalog files; by correspondence control number, applicant's name, title of work, and any entered cross-references in the automated correspondence management system; by fee service number, applicant's name, title of work, and any entered cross-references in the automated receipts in-process system; in the case of physical files, by correspondence control number on a bar code label attached to each file, for in-process files, and by applicant's name for closed correspondence files.

SAFEGUARDS:

Automated records are available at computer terminals located throughout the Library of Congress. Physical records are maintained in areas that are restricted to authorized personnel. All records in this system are maintained in areas that are locked during nonworking hours.

RETENTION AND DISPOSAL:

Retained permanently.

SYSTEM MANAGER(S) AND ADDRESS:

Section Head, Visual Arts Section, Examining Division, Department MW, Library of Congress, Washington, DC 20540.

NOTIFICATION PROCEDURE:

Inquiries about an individual's record should be in writing addressed to the Supervisory Copyright Information Specialist, Information Section, Information and Reference Division, Copyright Office, Library of Congress, Washington, DC 20559–6000.

RECORD ACCESS PROCEDURES:

Requests from individuals should be in writing addressed to the official designated under ''Notification Procedure.''

CONTESTING RECORD PROCEDURES:

See rules published in 37 CFR part 204.

RECORD SOURCE CATEGORIES:

Applicants or their authorized agents.

CO–26

SYSTEM NAME:

Mask Work Recorded Documents Files.

SYSTEM LOCATION:

Copyright Office, Library of Congress, Washington, DC 20559–6000.

CATEGORIES OF INDIVIDUALS COVERED BY THE SYSTEM:

Individuals who are parties to, or have submitted for recordation, assignments, licenses, and other documents pertaining to a mask work.

CATEGORIES OF RECORDS IN THE SYSTEM:

Assignments, licenses, wills, agreements or contracts, and other documents pertaining to mask works.

AUTHORITY FOR MAINTENANCE OF THE SYSTEM:

17 U.S.C. 908(b), 705.

ROUTINE USES OF RECORDS MAINTAINED IN THE SYSTEM, INCLUDING CATEGORIES OF USERS AND THE PURPOSES OF SUCH USES:

Records of recorded documents are open to public inspection from 8:30 a.m. to 5 p.m., Monday through Friday, except legal holidays. In addition, the Office uses these records to compile an index to recorded documents, which is interfiled in the automated catalog files.

POLICIES AND PRACTICES FOR STORING, RETRIEVING, ACCESSING, RETAINING, AND DISPOSING OF RECORDS IN THE SYSTEM:

STORAGE:

Prior to recordation, records are maintained in manila envelopes in file cabinets. Once recorded, original documents are microfilmed and returned to the applicant. Mask work documents appear on microfilm. Mask work documents recorded prior to 1990 appear on separate reel(s) of microfilm; they are not interspersed with copyright related documents.

RETRIEVABILITY:

Before recordation, by date the Office received the document; after recordation, cross-referenced in the automated catalog files by names of parties and titles of works.

SAFEGUARDS:

Prior to recordation, documents and related materials are maintained in a room which is restricted to authorized personnel. Automated records are available at computer terminals located throughout the Library of Congress. All records are maintained in areas that are locked during nonworking hours.

RETENTION AND DISPOSAL:

Retained permanently.

SYSTEM MANAGER(S) AND ADDRESS:

Head, Documents Recordation Section, Cataloging Division, Copyright Office, Library of Congress, Washington, DC 20559–6000.

NOTIFICATION PROCEDURE:

Inquiries about an individual's record should be in writing addressed to the Supervisory Copyright Information Specialist, Information Section, Information and Reference Division, Copyright Office, Library of Congress, Washington, DC 20559–6000.

RECORD ACCESS PROCEDURES:

Requests from individuals should be in writing addressed to the official designated under ''Notification Procedure.''

CONTESTING RECORD PROCEDURES:

See rules published in 37 CFR part 204.

RECORD SOURCE CATEGORIES:

Individual to whom the record pertains, such individual's authorized agent, and other parties named in the document recorded, or such parties' authorized agents, as well as individuals having an interest in the mask work which is the subject of the document submitted for recordation.

CO–27

SYSTEM NAME:

Notices of Intent to Enforce Restored Copyrights under the Uruguay Round Agreements Act (URAA).

SYSTEM LOCATION:

Copyright Office, Library of Congress, Washington, DC 20559–6000.

CATEGORIES OF INDIVIDUAL COVERED BY THE SYSTEM:

Individuals who have filed notices of intent to enforce copyrights restored under the URAA.

CATEGORIES OF RECORDS IN THE SYSTEM:

Notices of intent to enforce restored copyrights that have been filed with the Copyright Office.

AUTHORITY FOR MAINTENANCE OF THE SYSTEM:

17 U.S.C. 104(A).

ROUTINE USES OF RECORDS MAINTAINED IN THE SYSTEM INCLUDING CATEGORIES OF USERS AND THE PURPOSES OF SUCH USES:

Records of notices of intent to enforce (NIEs) are useful to persons seeking to identify copyright owners and restored works whose owners have filed NIEs with the U.S. Copyright Office.

POLICIES AND PRACTICES FOR STORING, RETRIEVING, AND DISPOSING OF RECORDS IN THE SYSTEM:

STORAGE:

Prior to recordations, records are maintained in file cabinets. Once recorded, original documents are recorded on optical disc.

RETRIEVABILITY:

Catalog records of NIEs are retrievable online by title, author, and copyright owner. Records also retrievable online by volume and page number where the document is recorded. Full NIEs are retrievable on optical disc by volume and page number.

SAFEGUARDS:

Prior to recordation, documents and related material are maintained in a room which is restricted to authorized personnel. All records are maintained in areas that are locked during nonworking hours.

RETENTION AND DISPOSAL:

Retained permanently.

SYSTEM MANAGER(S) AND ADDRESS:

Head, Documents Recordation Unit, Cataloging Division, Copyright Office, Library of Congress, Washington, DC 20559–6000; and Chief, Cataloging Division, Copyright Office, Library of Congress, Washington, DC 20559–6000.

NOTIFICATION PROCEDURE:

Inquiries about an individual's record should be made in writing, addressed to the Supervisory Copyright Information Specialist, Information Section, Information and Reference Division, Copyright Office, Library of Congress, Washington DC 20559–6000.

RECORD ACCESS PROCEDURES:

Request from individuals should be made in writing, addressed to the official designated under ''Notification Procedure.''

CONTESTING RECORD PROCEDURES:

See rules published in 37 CFR part 204.

RECORD SOURCE CATEGORIES:

Individual to whom the record pertains, such individual's authorized agent, and other parties to the documents recorded, or such parties' authorized agents, as well as individual having an interest in the copyright in a work which is the subject of the document submitted for recordation.

CO–28

SYSTEM NAME:

Litigation Statement Authorization File

SYSTEM LOCATION:

Copyright Office, Library of Congress, Washington, DC 20559–6000.

CATEGORIES OF INDIVIDUALS COVERED BY THE SYSTEM:

Individuals who in the course of actual or pending litigation request copies of registration records or deposits that were submitted by a claimant as part of his or her registration application.

CATEGORIES OF RECORDS IN THE SYSTEM:

The litigation statement which was filed by an appropriate party to request copies of such registration materials to be used in actual or pending litigation.

AUTHORITY FOR MAINTENANCE OF THE SYSTEM:

17 U.S.C. 705, 708.

ROUTINE USES OF RECORDS MAINTAINED IN THE SYSTEM, INCLUDING CATEGORIES OF USERS AND THE PURPOSES OF SUCH USES:

The Office uses these records to allow individuals involved in active or pending litigation on copyright matters to obtain copies of records that were submitted to the Office as part of the application and registration process.

POLICIES AND PRACTICES FOR STORING, RETRIEVING, ACCESSING, RETAINING, AND DISPOSING OF RECORDS IN THE SYSTEM:

STORAGE:

Records are stored in file cabinets in the Certifications and Documents area of the Copyright Office in the James Madison Building of the Library of Congress in Washington, DC 20559–6000.

RETRIEVABILITY:

By registraton number.

SAFEGUARDS:

These areas are restricted to authorized personnel and locked during nonworking hours.

RETENTION AND DISPOSAL:

Retained for 10 years.

SYSTEM MANAGER(S) AND ADDRESS:

Section Head, Certification and Documents Section, Information and Reference Division, Copyright Office, Library of Congress, Washington, DC 20559–6000.

NOTIFICATION PROCEDURE:

Inquiries about an individual's record should be in writing addressed to the Supervisory Copyright Information Specialist, Information Section, Information and Reference Division, Copyright Office, Library of Congress, Washington, DC 20559–6000.

RECORD ACCESS PROCEDURE:

Requests from individuals should be in writing addressed to the official designated under ''Notification Procedure.''

CONTESTING RECORD PROCEDURES:

See rules published in 37 CFR part 204.

RECORD SOURCE CATEGORIES:

Individual to whom the record pertains, or his or her authorized agent.

Dated: September 22, 1998.

David O. Carson,

General Counsel.

[FR Doc. 98–25732 Filed 9–25–98; 8:45 am]

BILLING CODE 1410–30–P

NATIONAL FOUNDATION ON THE ARTS AND THE HUMANITIES

National Endowment for the Arts; Leadership Initiatives Advisory Panel

Pursuant to Section 10(a)(2) of the Federal Advisory Committee Act (Public Law 92–463), as amended, notice is hereby given that a meeting of the Leadership Initiatives Advisory Panel, ArtsEdge section, to the National Council on the Arts will be held on October 9, 1998. The panel will meet via teleconference from 5:00 p.m. to 5:45 p.m. in Room 522 at the Nancy Hanks Center, 1100 Pennsylvania Avenue, NW, Washington, DC 20506.

This meeting is for the Purpose of Panel review, discussion, evaluation, and recommendation on applications for financial assistance under the National Foundation on the Arts and the Humanities Act of 1965, as amended, including information given in confidence to the agency by grant applicants. In accordance with the determination of the Chairman of May 14, 1998, these sessions will be closed to the public pursuant to subsection (c)(4), (6) and (9)(B) of section 552b of Title 5, United States Code.

Further information with reference to this meeting can be obtained from Ms. Kathy Plowitz-Worden, Panel Coordinator, National Endowment for the Arts, Washington, DC 20506, or call (202) 682–5691.

Dated: September 22, 1998.

Kethy Plowitz-Worden,

Panel Coordinator, National Endowment for the Arts.

[FR Doc. 25869 Filed 9–25–98; 8:45 am]

BILLING CODE 7537–01–M

NATIONAL SCIENCE FOUNDATION

Special Emphasis Panel in Bioengineering and Environmental Systems; Notice of Meeting

In accordance with the Federal Advisory Committee Act (Pub. L. 92–463, as amended), the National Science Foundation announces the following meeting.

Name: Special Emphasis Panel in Bioengineering and Environmental Systems (No. 1189).

Date and Time: October 28, 1998; 8:00am—5:00pm.

Place: National Science Foundation, 4201 Wilson Boulevard, Room 365, Arlington, VA 22230.

Type of Meeting: Closed.

Contact Person: Janice M. Jenkins, Program Director, Biomedical Engineering and Research and Aid Persons with Disabilities, Division of Bioengineering and Environmental Systems, National Science Foundation, 4201 Wilson Boulevard, Arlington, VA 22230, Telephone: (703) 306–1318.

Purpose of Meeting: To provide advice and recommendations concerning proposals submitted to NSF for financial support.

Agenda: To review and evaluate proposals as part of the selection process for awards.

Reason for Closing: The proposals being reviewed include information of a proprietary or confidential nature, including technical information; financial data, such as salaries; and personal information concerning individuals associated with the proposals. These matters are exempt under 5 U.S.C. 552b(c), (4) and (6) of the Government in the Sunshine Act.

Dated: September 23, 1998.

M. Rebecca Winkler,

Committee Management Officer.

[FR Doc. 98–25880 Filed 9–25–98; 8:45 am]

BILLING CODE 7555–01–M

NATIONAL SCIENCE FOUNDATION

Advisory Committee for Biological Sciences (BIO); Notice of Meeting

In accordance with the Federal Advisory Committee Act (Pub. L., 92–463, as amended), the National Science Foundation announces the following meeting:

Name: Advisory Committee for Biological Sciences (BIO) (1110).

Date and Time: October 22, 1998; 8:45 a.m.–5 p.m.; October 23, 1998; 8:45 a.m.–2:00 p.m.

Place: National Science Foundation, 4201 Wilson Blvd., Arlington, VA 22230, Room 1235.

Type of Meeting: Open.

Contact Person: Dr. Mary E. Clutter, Assistant Director, Biological Sciences, Room 605, National Science Foundation, 4201 Wilson Blvd., Arlington, VA 22230, Tel No.: (703) 306–1400.

Minutes: May be obtained from the contact person listed above.

Purpose of Meeting: The Advisory Committee for BIO provides advice, recommendations, and oversight concerning major program emphases, directions, and goals for the research-related activities of the divisions that make up BIO.

Agenda: Government Performance and Results Act (GPRA).

Dated: September 23, 1998.

M. Rebecca Winkler,

Committee Management Officer.

[FR Doc. 98–25879 Filed 9–25–98; 8:45 am]

BILLING CODE 7555–01–M

NATIONAL SCIENCE FOUNDATION

Advisory Panel for Biomolecular Structure and Function; Notice of Meeting

In accordance with the Federal Advisory Committee Act (Pub. L. 92–463, as amended), the National Science Foundation announces the following meeting.

Name: Advisory Panel for Biomolecular Structure and Function—(1134) (Panel A).

Date and Time: Wednesday, Thursday, and Friday, October 21–23, 1998—8:30 am to 6:00 pm.

Place: National Science Foundation, 4201 Wilson Blvd., Room 340, Arlington, VA 22230.

Type of Meeting: Closed.

Contact Person: Dr. Marcia Steinberg & Dr. Pien-Chien Huang, Program Directors for Molecular Biochemistry, Room 655, National Science Foundation, 4201 Wilson boulevard, Arlington, Virginia 22230. (703/306–1443).

Purpose of Meeting: To provide advice and recommendations concerning proposals submitted to NSF for Financial support.

Agenda: To review and evaluate research proposals submitted to the Molecular Biochemistry Program as part of the selection process for awards.

Reason for Closing: The proposals being reviewed include information of a proprietary of confidential nature, including technical information; financial data, such as salaries; and personal information concerning individuals associated with the proposals. These matters are exempt under 5 U.S.C. 552b(c), (4) and (6) of the Government in the Sunshine Act.

Dated: September 22, 1998.

M. Rebecca Winkler,

Committee Management Officer.

[FR Doc. 98–25768 Filed 9–25–98; 8:45 am]

BILLING CODE 7555–01–M

NATIONAL SCIENCE FOUNDATION

Special Emphasis Panel in Computer—Communications Research; Notice of Meeting

In accordance with the Federal Advisory Committee Act (Pub. L. 92–463, as amended), the National Science Foundation announces the following meeting.

Name: Special Emphasis Panel in Computer—Communications Research (1192).

Date: October 21, 22, 26 and November 2, 4, 6.

Time: 8:00 a.m.–5:00 p.m.

Place: Rooms 360, 365, 390, 310, 320, 370, 330, National Science Foundation, 4201 Wilson Boulevard, Arlington, VA 22230.

Type of Meeting: Closed.

Contact Person: Dr. Kamal Abdali, Program Director, C–CR, room 1145, National Science Foundation, 4201 Wilson Boulevard, Arlington, VA 22230, 703/306–1910.

Purpose of Meeting: To provide advice and recommendations concerning proposals submitted to the National Science Foundation for financial support.

Agenda: To review and evaluate Faculty Early Career Development (CAREER) proposals as part of the selection process for awards.

Reason for Closing: The proposals being reviewed include information of a proprietary or confidential nature, including technical information; financial data such as salaries, and personal information concerning individuals associated with the proposals. These matters are exempt under 5 U.S.C. 552b•, (4) and (6) of the Government in the Sunshine Act.

Dated: September 22, 1998.

M. Rebecca Winkler,

Committee Management Officer.

[FR Doc. 98–25771 Filed 9–25–98; 8:45 am]

BILLING CODE 7555–01–M

NATIONAL SCIENCE FOUNDATION

Special Emphasis Panel in Elementary, Secondary and Informal Education, Notice of Meetings

In accordance with the Federal Advisory Committee Act (Pub. L. 92–463, as amended), the National Science Foundation announces the following meetings:

Name: Special Emphasis Panel in Elementary, Secondary and Informal Education (59).

Dates & Times:

October 15, October 22—6:00 p.m. to 10:00 p.m.

October 16, October 23—8:00 p.m. to 10:00 p.m.

October 17, October 24—8:00 p.m. to 5:00 p.m.

Place: National Airport Hilton, 2399 Jefferson Davis Highway, Arlington, VA.

Type of Meetings: Closed.

Contact Person: Dr. Susan P. Snyder, Teacher Enhancement Program Director, Dr. John Bradley, Instructional Materials Development Program, Division of Elementary, Secondary and Informal Education, Room 885, National Science Foundation, 4201 Wilson Blvd, Arlington, VA 22230, Tel: (703) 306–1620.

Purpose of Meetings: To provide advice and recommendations concerning proposals submitted to NSF for financial support.

Agenda: To review and evaluate Teacher Enhancement and Instructional Materials Development proposals as part of the selection process for awards.

Reason for Closing: The proposals being reviewed includes information of a proprietary or confidential nature, including technical information, financial data, such as salaries; and personal information concerning individuals associated with the proposals. These matters are within exemptions (4) and (6) of 5 U.S.C. 552b(c), the Government in the Sunshine Act.

Dated: September 22, 1998.

M. Rebecca Winkler,

Committee Management Officer.

[FR Doc. 98–25769 Filed 9–25–98; 8:45 am]

BILLING CODE 7555–01–M

NATIONAL SCIENCE FOUNDATION

Special Emphasis Panel in Elementary, Secondary and Informal Education, Notice of Meeting

In accordance with the Federal Advisory Committee Act (Pub. L. 92–463, as amended), the National Science Foundation announces the following meeting:

Name: Special Emphasis Panel in Elementary, Secondary and Informal Education (59).

Date and Time: October 13, 1998, 12 noon to 5:00 p.m.

Place: Room 880, NSF, 4201 Wilson Boulevard, Arlington, VA.

Type of Meeting: Closed.

Contact Person: Dr. Janice M. Earle, Program Director, Instructional Materials Development Program, Division of Elementary, Secondary and Informal Education, Room 885, National Science Foundation, 4201 Wilson Blvd. Arlington, VA 22230, Tel: (703) 306–1613.

Purpose of Meeting: To provide advice and recommendations concerning proposals submitted to NSF for financial support.

Agenda: To review and evaluate Social Science proposals as part of the selection process for awards.

Reason For Closing: The proposals being reviewed includes information of a proprietary or confidential nature, including technical information, financial data, such as salaries; and personal information concerning individuals associated with the proposals. These matters are within exemptions (4) and (6) of 5 U.S.C. 552b(c), the Government in Sunshine Act.

Dated: September 22, 1998.

M. Rebecca Winkler,

Committee Management Officer.

[FR Doc. 98–25877 Filed 9–25–98; 8:45 am]

BILLING CODE 7555–01–M

NATIONAL SCIENCE FOUNDATION

Special Emphasis Panel in Experimental and Integrative Activities; Notice of Meeting

In accordance with the Federal Advisory Committee Act (Pub. L. 92–463, as amended), the National Science Foundation announces the following meeting.

Name: Special Emphasis Panel in Experimental and Integrative Activities (1193).

Date and Time: October 20, 1998 from 8:30 am to 5:30 pm.

Place: Rooms 1120, 970, 880, 770, 530, 365 NSF, 4201 Wilson Blvd., Arlington, VA.

Type of Meeting: Closed.

Contact Person: Dr. Rita V. Rodriquez, Program Director for Research Instrumentation, Division of Experimental and Integrative Activities, Room 1160, National Science Foundation, 4201 Wilson Blvd., Arlington, VA 22230. Telephone: (703) 306–1980.

Purpose of Meeting: To provide advice and recommendations concerning proposals submitted to the National Science Foundation for financial support.

Agenda: To review and evaluate CISE Research Instrumentation proposals as part of the selection process for awards.

Reason for Closing: The proposals being reviewed include information of a proprietary or confidential nature, including technical information; financial data such as salaries, and personal information concerning individuals associated with the proposals. These matters are exempt under 5 U.S.C. 552b(c), (4) and (6) of the Government in the Sunshine Act.

Dated: September 23, 1998.

M. Rebecca Winkler,

Committee Management Officer.

[FR Doc. 98–25878 Filed 9–25–98; 8:45 am]

BILLING CODE 7555–01–M

NATIONAL SCIENCE FOUNDATION

Advisory Panel for Neuroscience; Notice of Meeting

In accordance with the Federal Advisory Committee Act (Pub. L. 92–463, as amended), the National Science Foundation announces the following meeting;

Name: Advisory Panel for Neuroscience (1158).

Date and Time: October 22–23, 1998; 9:00 a.m. to 5:00 p.m.

Place: Room 630, 4201 Wilson Boulevard, Arlington, VA.

Type of Meeting: Part-Open.

Contact Person: Dr. Roy White, Program Director, Neuronal & Glial Mechanisms, Division of Integrative Biology and Neuroscience, Suite 685, National Science Foundation, 4201 Wilson Blvd., Arlington, VA 22230 Telephone: (703) 306–1424.

Purpose of Meeting: To provide advice and recommendations concerning proposals submitted to NSF for financial support.

Minutes: May be obtained from the contact person listed above.

Agenda: Open Session: October 23, 1998; 2:00 p.m. to 3:00 p.m., to discuss goals and assessment procedures. Closed Session: October 22, 1998; 9:00 a.m. to 5:00 p.m.; October 23, 1998; 9:00 a.m. to 2:00 p.m., and 3:00 p.m. to 5:00 p.m. To review and evaluate Neuronal & Glial Mechanisms proposals as part of the selection process for awards.

Reason for Closing: The proposals being reviewed include information of a proprietary or confidential nature, including technical information; financial data, such as salaries; and personal information concerning individuals associated with the proposals. These matters are exempt under 5 U.S.C. 552b(c) (4) and (6) of the Government in the Sunshine Act.

Dated: September 22, 1998.

M. Rebecca Winkler,

Committee Management Officer.

[FR Doc. 98–25766 Filed 9–25–98; 8:45 am]

BILLING CODE 7555–01–M

NATIONAL SCIENCE FOUNDATION

Advisory Panel for Neuroscience; Notice of Meeting

In accordance with the Federal Advisory Committee Act (Pub. L. 92–463, as amended), the National Science Foundation announces the following meeting:

Name: Advisory Panel for Neuroscience (1158).

Date and Time: October 29–30, 1998; 9:00 a.m. to 5:00 p.m.

Place: Room 320, 4201 Wilson Boulevard, Arlington, VA.

Type of Meeting: Part-Open.

Contact Person: Dr. Lawrence Kromer, Program Director, Developmental Neuroscience, Division of Integrative Biology and Neuroscience, Suite 685, National Science Foundation, 4201 Wilson Boulevard, Arlington, VA 22230 Telephone: (703) 306–1423.

Purpose of Meeting: To provide advice and recommendations concerning proposals submitted to NSF for financial support.

Minutes: May be obtained from the contact person listed above.

Agenda: Open Session: October 30, 1998; 11:00 a.m. to 12:00 a.m., to discuss goals and assessment procedures. *Closed Session:* October 29, 1998; 9:00 a.m. to 5:00 p.m., and October 30, 9:00 a.m. to 11:00 a.m. and 12:00 a.m. to 5:00 p.m. To review and evaluate Developmental Neuroscience proposals as part of the selection process for awards.

Reason for Closing: The proposals being reviewed include information of a

proprietary or confidential nature, including technical information; financial data, such as salaries; and personal information concerning individuals associated with the proposals. These matters are exempt under 5 U.S.C. 552b(c) (4) and (6) of the Government in the Sunshine Act.

Dated: September 22, 1998.

M. Rebecca Winkler,

Committee Management Officer.

[FR Doc. 98–25773 Filed 9–25–98; 8:45 am]

BILLING CODE 7555–01–M

NATIONAL SCIENCE FOUNDATION

Special Emphasis Panel in Physics; Notice of Meeting

In accordance with the Federal Advisory Committee Act (Pub. L. 92–463, as amended), the National Science Foundation announces the following meeting:

Name: Special Emphasis Panel in Physics (1208).

Date and Time: Friday, October 16, 1998, 8:30 a.m.–5:00 p.m.

Place: Rooms 305 and 311, Newman Laboratory, Cornell University, Ithaca, NY 14853–5001.

Type of Meeting: Closed.

Contact Person: Dr. Alexander Firestone, Program Director for Elementary Particle Physics, Division of Physics, Rm 1015, National Science Foundation, 4201 Wilson Blvd., Arlington, VA 22230. Telephone: (703) 306–1898.

Purpose of Meeting: To provide advice and recommendations concerning further NSF support of the Cornell Electron Storage Ring (CESR) upgrade project.

Agenda: To review and evaluate the progress to date on all aspects of the CESR upgrade project.

Reason for Closing: The project being reviewed includes information of a proprietary or confidential nature, including technical information; financial data, such as salaries, and personal information concerning individuals associated with the proposals. These matters are exempt under 5 U.S.C. 552b(c) (4) and (6) of the Government in the Sunshine Act.

Dated: September 22, 1998.

M. Rebecca Winkler,

Committee Management Officer.

[FR Doc. 98–25770 Filed 9–25–98; 8:45 am]

BILLING CODE 7555–01–M

NATIONAL SCIENCE FOUNDATION

Advisory Panel for Physiology and Ethology; Notice of Meeting

In accordance with the Federal Advisory Committee Act (Pub. L. 92–463, as amended), the National Science Foundation (NSF) announces the following meeting:

Name: Advisory Panel for Physiology and Ethology (1145).

Date and Time: October 26, 27 & 28, 1998; 8:30 a.m. to 6:00 p.m.

Place: NSF, Room 340, 4201 Wilson Blvd., Arlington, VA.

Type of Meeting: Part-Open.

Contact Person: Dr. Roger P. Hangarter, Program Director, Integrative Plant Biology, Division of Integrative Biology and Neuroscience, Room 685N, National Science Foundation, 4201 Wilson Boulevard, Arlington, VA 22230, Telephone: (703) 306–1422.

Purpose of Meeting: To provide advice and recommendations concerning proposals submitted to NSF for financial support.

Minutes: May be obtained from the contact persons listed above.

Agenda: Open Session: October 28, 1998, 11:00 a.m. to 12:00 p.m.—discussion on research trends, opportunities and assessment procedures in Integrative Plant Biology.

Closed Session: October 26, 1998, 8:30 a.m.–6:00 p.m., October 27, 1998, 8:30 a.m.–6:00 p.m., October 28, 1998, 8:30 a.m. to 11:00 a.m. and 12:00 p.m. to 5:00 p.m. To review and evaluate Integrative Plant Biology proposals as part of the selection process for awards.

Reason for Closing: The proposals being reviewed include information of a proprietary or confidential nature, including technical information; financial data, such as salaries; and personal information concerning individuals associated with the proposals. These matters are exempt under 5 U.S.C. 552b(c), (4) and (6) of the Government in the Sunshine Act.

Dated: September 22, 1998.

M. Rebecca Winkler,

Committee Management Officer.

[FR Doc. 98–25772 Filed 9–25–98; 8:45 am]

BILLING CODE 7555–01–M

NATIONAL SCIENCE FOUNDATION

Advisory Panel for Social and Political Science; Notice of Meeting

In accordance with the Federal Advisory Committee Act (Pub. L. 92–463, as amended), the National Science Foundation announces the following meeting:

Name: Advisory Panel for Social and Political Science (#1761).

Date and Time: October 22–23, 1998; 8:00 a.m. to 5:00 p.m.

Place: National Science Foundation; 4201 Wilson Boulevard, Rooms 970, 530, 580, 1295, 920, 1060, 1150 and 770; Arlington, VA 22230.

Type of Meeting: Closed.

Contact Person: Drs. Scioli, Nelson, Bauer and James, Program Directors for Social Behavioral and Economic Research, National Science Foundation, 4201 Wilson Boulevard, Arlington, VA 22230. Telephone: (703) 306–1761.

Agenda: To review and evaluate the urban research initiative proposals as part of the selection process for awards.

Purpose of Meetings: To provide advice and recommendations concerning support for research proposals submitted to the NSF for financial support.

Reason for Closing: The proposals being reviewed include information of a proprietary or confidential nature, including technical information; financial data, such as salaries; and personal information concerning individuals associated with the proposals. These matters are exempt under 5 U.S.C. 552b(c) (4) and (6) of the Government in the Sunshine Act.

Dated: September 22, 1998.

M. Rebecca Winkler,

Committee Management Officer.

[FR Doc. 98–2567 Filed 9–25–98; 8:45 am]

BILLING CODE 7555–01–M

NATIONAL WOMEN'S BUSINESS COUNCIL

Sunshine Act Meeting

AGENCY: National Women's Business Council.

ACTION: Notice of meeting.

SUMMARY: In accordance with the Women's Ownership Act, Public Law 105–135 as amended, the National Women's Business Council (NWBC) announces a forthcoming Council meeting. This meeting will cover Council business related to Summit '98, the Women's Economic Summit; the release of Council government contracting research; the Council's FY99 budget; and proposed Council initiatives.

DATES: October 14, 1998.

ADDRESSES: *Council Meeting:* The Inn and Conference Center, University of Maryland, University Boulevard & Aldelphi Road, Room 1123, College Park, MD 20742, 2:00 p.m.–4:30 p.m.

STATUS: Open to the public—limited space available.

CONTACT: National Women's Business Council, 409 Third Street, SW, Suite 5850, Washington, DC 20024, (202)205–3850.

Note: Please call by October 9, 1998. Attendance by RSVP only.

Gilda Presley,

Administrative Officer, National Women's Business Council.

[FR Doc. 98–26069 Filed 9–24–98; 3:21 pm]

BILLING CODE 6820–AB–M

NUCLEAR REGULATORY COMMISSION

[Docket No. 50–259; License No. DPR–33]

Tennessee Valley Authority; Notice of Informal 10 CFR 2.206 Public Hearing

The U.S. Nuclear Regulatory Commission (NRC) will hold an informal public hearing regarding a petition submitted pursuant to 10 CFR 2.206 involving Browns Ferry Nuclear Plant, Unit 1, of the Tennessee Valley Authority (TVA or the licensee). The hearing will be held on October 26, 1998. The location of the hearing will be at the Browns Ferry Nuclear Plant Training Center, Auditorium. The Browns Ferry Nuclear Plant Training Center is located at Shaw Road and Nuclear Plant Road, Athens, Alabama. The hearing will be open to public attendance and will be transcribed.

The structure of the hearing shall be as follows:

Monday October 26, 1998:
1:00 p.m.—NRC opening remarks
1:15 p.m.—Petitioner's presentation
2:00 p.m.—NRC questions
2:15 p.m.—Licensee's presentation
3:00 p.m.—NRC questions
3:15 p.m.—Public Comments
3:45 p.m.—Licensee/Petitioner's final statements
4:00 p.m.—Meeting concludes

By letter dated April 5, 1997, the Union of Concerned Scientists (UCS or Petitioner) submitted a Petition pursuant to 10 CFR 2.206 requesting (1) that the operating license for Browns Ferry Nuclear Plant, Unit 1 be revoked and (2) that the NRC require TVA to submit either a decommissioning plan or a lay-up plan for Browns Ferry Nuclear Plant, Unit 1. In addition, the Petitioner requested a hearing on this petition to present new information on Browns Ferry Nuclear Plant, Unit 1 that would include a discussion of the licensing basis reconstitution that would be required to support restart, and certain financial aspects that might be a consideration for the TVA's decision for retaining the Browns Ferry Unit 1 operating license.

The purpose of this informal public hearing is to obtain additional information from the Petitioner, the licensee, and the public for NRC staff use in evaluating the Petition. Therefore, this informal public hearing will be limited to information relevant to issues raised in the Petition. The staff will not offer any preliminary views on its evaluation of the Petition. The informal public hearing will be chaired by a senior NRC official who will limit presentations to the above subject.

The format of the informal public hearing will be as follows: opening remarks by the NRC regarding the general 10 CFR 2.206 process, the purpose of the informal public hearing, and a brief summary of the Petition and its Addendum (15 minutes); time for the Petitioner to articulate the basis of the Petition (45 minutes); time for the NRC to ask the Petitioner questions for purposes of clarification (15 minutes); time for the licensee to address the issues raised in the Petition (45 minutes); time for the NRC to ask the licensee questions for purposes of clarification (15 minutes); time for public comments relative to the Petition (30 minutes); and time for licensee and Petitioner's final statements (15 minutes).

Members of the public who are interested in presenting information relative to the Petition should notify the NRC official named below, 5 working days prior to the hearing. A brief summary of the information to be presented and the time requested should be provided in order to make appropriate arrangements. Time allotted for presentations by members of the public will be determined based upon the number of requests received and will be announced at the beginning of the hearing. The order for public presentations will be on a first received first to speak basis.

Written statements will also be accepted and included in the record of the hearing. Written statements should be mailed to the U.S. Nuclear Regulatory Commission, Mail stop O–14B21, Attn: Albert W. De Agazio, Washington, DC 20555.

Requests for the opportunity to present information can be made by contacting Albert W. De Agazio, Project Manager, Division of Reactor Projects-I/II (telephone 301–415–1443) between 8:00 a.m. to 5:45 p.m. (EDT), Monday-Friday. Persons planning to attend this informal public hearing are urged to contact the above 1 or 2 days prior to the informal public hearing to be advised of any changes that may have occurred.

Dated at Rockville, Maryland, this 22nd day of September 1998.

For the Nuclear Regulatory Commission.

John A. Zwolinski,

Acting Director, Division of Reactor Projects—I/II, Office of Nuclear Reactor Regulation.

[FR Doc. 98–25831 Filed 9–24–98; 10:41 am]

BILLING CODE 7590–01–P

NUCLEAR REGULATORY COMMISSION

[Docket Nos. 50–369 and 50–370]

Duke Energy Corporation; McGuire Nuclear Station, Units 1 and 2; Environmental Assessment and Finding of No Significant Impact

The U.S. Nuclear Regulatory Commission (the Commission) is considering issuance of amendments to Facility Operating License Nos. NPF–9 and NPF–17 issued to Duke Energy Corporation (DEC or the licensee) for operation of the McGuire Nuclear Station, Units 1 and 2 (McGuire), respectively, located at the licensee's site in Mecklenberg County, North Carolina.

Environmental Assessment

Identification of the Proposed Action

The proposed action will replace the McGuire current Technical Specifications (CTS) to be consistent with the Improved Standard Technical Specifications (ITS) based on Revision 1 to NUREG–1431, ''Standard Technical Specifications Westinghouse Plants BWR/4'' April 1995, and the CTS for McGuire Units 1 and 2. The proposed action is in response to the licensee's application dated May 27, 1997, as supplemented on March 9, March 20, April 20, June 3, June 24, July 7, July 21, July 22, August 5, September 8, and September 15, 1998.

The Need for the Proposed Action

It has been recognized that nuclear safety in all plants would benefit from improvement and standardization of the TSs. The Commission's ''NRC Interim Policy Statement on Technical Specification Improvements for Nuclear Power Reactors'' (52 FR 3788, February 6, 1987), and later the Commission's ''Final Policy Statement on Technical Specification Improvements for Nuclear Power Reactors'' (58 FR 39132, July 22, 1993), formalized this need. To facilitate the development of individual improved TSs, each reactor vendor owners group (OG) and the NRC staff developed standard TSs (STS). For Westinghouse plants, the STS are published as NUREG–1431, and this document was the basis for the new McGuire Unit 1 and Unit 2 TSs. The NRC Committee to Review Generic Requirements reviewed the STS and made note of the safety merits of the STS and indicated its support of conversion to the STS by operating plants.

Description of the Proposed Change

The proposed revision to the TSs is based on NUREG–1431 and on guidance provided in the Final Policy Statement. Its objective is to completely rewrite, reformat, and streamline the existing TSs. Emphasis is placed on human factors principles to improve clarity and understanding. The Bases section has been significantly expanded to clarify and better explain the purpose and foundation of each specification. In addition to NUREG–1431, portions of the existing TSs were also used as the basis for the ITS. Plant-specific issues (unique design features, requirements, and operating practices) were discussed at length with the licensee, and generic matters with the OG.

The proposed changes from the existing TS can be grouped into four general categories, as follows:

1. Administrative (nontechnical) changes, which were intended to make the ITS easier to use for plant operations personnel. They are purely editorial in nature or involve the movement or reformatting of requirements without affecting technical content. Every section of the McGuire TSs has undergone these types of changes. In order to ensure consistency, the NRC staff and the licensee have used NUREG–1431 as guidance to reformat and make other administrative changes.

2. Relocation of requirements, which includes items that were in the existing McGuire TSs. The TSs that are being relocated to licensee-controlled documents are not required to be in the TSs under 10 CFR 50.36, as the TSs do not meet any of the four criteria contained in 10 CFR 50.36 for inclusion in the TSs. They are not needed to obviate the possibility that an abnormal situation or event will give rise to an immediate threat to public health and safety. The NRC staff has concluded that appropriate controls have been established for all of the current specifications, information, and requirements that are being moved to licensee-controlled documents. In general, the proposed relocation of items in the McGuire TSs to the Updated Final Safety Analysis Report, appropriate plant-specific programs, procedures, and ITS Bases follows the guidance of the Westinghouse STS (NUREG–1431). Once these items have been relocated by removing them from the TSs to licensee-controlled documents, the licensee may revise them under the provisions of 10 CFR 50.59 or other NRC staff-approved control mechanisms, which provide appropriate procedural means to control changes.

3. More restrictive requirements, which consist of proposed McGuire ITS items that are either more conservative than corresponding requirements in the existing McGuire TSs, or are additional restrictions that are not in the existing McGuire TSs but are contained in NUREG–1431. Examples of more restrictive requirements include: placing a limiting condition for operation on plant equipment that is not required by the present TSs to be operable; more restrictive requirements to restore inoperable equipment; and more restrictive surveillance requirements.

4. Less restrictive requirements, which are relaxations of corresponding requirements in the existing McGuire TSs that provide little or no safety benefit and place unnecessary burdens on the licensee. These relaxations were the result of generic NRC actions or other analyses. They have been justified on a case-by-case basis for McGuire and will be described in the staff's Safety Evaluation to be issued with the license amendments.

In addition to the changes previously described, the licensee proposed certain changes to the existing TSs that deviated from the STS in NUREG–1431. These additional proposed changes are described in the licensee's application and in the staff's Notices of Consideration of Issuance of Amendments to Facility Operating Licenses and Opportunity for a Hearing (63 FR 25107, 63 FR 25108, 63 FR 27761, 63 FR 40554; 63 FR 45524). Where these changes represent a change to the current licensing basis for McGuire, they have been justified on a case-by-case basis and will be described in the staff's Safety Evaluation to be issued with the license amendments.

Environmental Impacts of the Proposed Action

The Commission has completed its evaluation of the proposed action and concludes that the proposed TS conversion would not increase the probability or consequences of accidents previously analyzed and would not affect facility radiation levels or facility radiological effluents.

Changes that are administrative in nature have been found to have no effect on the technical content of the TSs, and are acceptable. The increased clarity and understanding these changes bring to the TSs are expected to improve the operator's control of the plant in normal and accident conditions.

Relocation of requirements to licensee-controlled documents does not change the requirements themselves. Future changes to these requirements may be made by the licensee under 10 CFR 50.59 or other NRC-approved control mechanisms, which ensures continued maintenance of adequate requirements. All such relocations have been found to be in conformance with the guidelines of NUREG–1431 and the Final Policy Statement, and, therefore, are acceptable.

Changes involving more restrictive requirements have been found to be acceptable and are likely to enhance the safety of plant operations.

Changes involving less restrictive requirements have been reviewed individually. When requirements have been shown to provide little or no safety benefit or to place unnecessary burdens on the licensee, their removal from the TSs was justified. In most cases, relaxations previously granted to individual plants on a plant-specific basis were the result of a generic NRC action, or of agreements reached during discussions with the OG and found to be acceptable for McGuire. Generic relaxations contained in NUREG–1431 as well as proposed deviations from NUREG–1431 have also been reviewed by the NRC staff and have been found to be acceptable.

In summary, the proposed revision to the TSs was found to provide control of plant operations such that reasonable assurance will be provided so that the health and safety of the public will be adequately protected.

These TS changes will not increase the probability or consequences of accidents, no changes are being made in the types of any effluents that may be released offsite, and there is no significant increase in individual or cumulative occupational or public radiation exposure. Accordingly, the Commission concludes that there are no significant radiological environmental impacts associated with the proposed action.

With regard to potential nonradiological impacts, the proposed action involves features located entirely within the restricted area as defined in 10 CFR Part 20. The proposed action does not involve any historic sites. It does not affect nonradiological plant effluents and has no other environmental impact. Accordingly, the Commission concludes that there are no significant nonradiological environmental impacts associated with the proposed action.

Alternatives to the Proposed Action

Since the Commission has concluded there is no significant environmental impact associated with the proposed amendments, any alternatives with equal or greater environmental impact need not be evaluated. The principal

alternative to this action would be to deny the request for the amendment (i.e., ''no action''). Such action would not reduce the environmental impacts of plant operations. The environmental impacts of the proposed action and the alternative action are similar.

Alternative Use of Resources

This action did not involve the use of any resources not previously considered in the Final Environmental Statement related to the operation of the McGuire Units 1 and 2.

Agencies and Persons Consulted

In accordance with its stated policy, on September 18, 1998, the staff consulted with the North Carolina State official, Mr. J. James, of the North Carolina Department of Environment, Commerce and Natural Resources, Division of Radiation Protection. The State official had no comments.

Finding of No Significant Impact

Based upon the environmental assessment, the Commission concludes that the proposed action will not have a significant effect on the quality of the human environment. Accordingly, the Commission has determined not to prepare an environmental impact statement for the proposed amendments.

For further details with respect to this action, see the licensee's letter dated May 27, 1997, as supplemented on March 9, March 20, April 20, June 3, June 24, July 7, July 21, July 22, August 5, September 8, and September 15, 1998, which are available for public inspection at the Commission's Public Document Room, the Gelman Building, 2120 L Street, NW., Washington, DC, and at the local public document room located at the J. Murrey Atkins Library, University of North Carolina at Charlotte, 9201 University City Boulevard, Charlotte, North Carolina.

Dated at Rockville, Maryland, this 22nd day of September 1998.

For the Nuclear Regulatory Commission.

Peter S. Tam,

Acting Director, Project Directorate II–2, Division of Reactor Projects—I/II, Office of Nuclear Reactor Regulation.

[FR Doc. 98–25832 Filed 9–25–98; 8:45 am]

BILLING CODE 7590–01–P

NUCLEAR REGULATORY COMMISSION

[Docket Nos. 50–498 and 50–499]

Houston Lighting & Power Company, et al.; Environmental Assessment and Finding of No Significant Impact

The U.S. Nuclear Regulatory Commission (the Commission) is considering approval, by issuance of an order under 10 CFR 50.80, of the indirect transfer of Facility Operating Licenses Nos. NPF–76 and NPF–80, to the extent they are held by Central Power and Light Company (CPL) for the South Texas Project, Units 1 and 2 (STP), located in Matagorda County, Texas.

Environmental Assessment

Identification of the Proposed Action

The proposed action would consent to the indirect transfer of the licenses with respect to a proposed merger between Central and South West Corporation (CSW) and American Electric Power Company, Inc. (AEP). CSW is the parent holding company of CPL, which holds licenses to possess interests in STP. Houston Lighting & Power Company, City Public Service Board of San Antonio, Central Power and Light Company, City of Austin, Texas, and STP Nuclear Operating Company are holders of Facility Operating Licenses Nos. NPF–76 and NPF–80, issued on March 22, 1988, and March 28, 1989, respectively. Facility Operating Licenses Nos. NPF–76 and NPF–80 authorize the holders to possess STP, and authorize STP Nuclear Operating Company to use and operate STP in accordance with the procedures and limitations set forth in the operating licenses. By application dated June 16, 1998, submitted under cover of a letter dated June 19, 1998, as supplemented by letter dated June 23, 1998, and enclosures thereto, the Commission was informed that CSW and AEP have entered into a merger agreement under which CSW would become a wholly-owned subsidiary of AEP with CPL remaining a wholly-owned subsidiary of CSW. The application seeks approval of the indirect transfer of the interests held by CPL under the STP operating licenses to AEP to the extent affected by the proposed merger.

According to the application, the merger will have no adverse effect on either the technical management or operation of STP since STP Nuclear Operating Company, responsible for the operation and maintenance of STP, is not involved in the merger. Houston Lighting & Power Company, City Public Service Board of San Antonio, Central Power and Light Company, City of Austin, Texas, and STP Nuclear Operating Company will remain licensees responsible for their possessory interests and related obligations. No direct transfer of the licenses will result from the merger.

The proposed action is in accordance with CPL's application dated June 16, 1998, submitted under cover of a letter dated June 19, 1998, as supplemented by letter dated June 23, 1998, and enclosures thereto.

The Need for the Proposed Action

The proposed action is needed to allow the proposed merger to be consummated, to the extent such merger will result in the indirect transfer of the licenses discussed above.

Environmental Impacts of the Proposed Action

The proposed action involves administrative activities regarding a corporate merger involving a non-licensee holding company and is unrelated to plant operation.

The proposed action will not result in an increase in the probability or consequences of accidents or result in a change in occupational or public dose. Therefore, there are no radiological impacts associated with the proposed action.

The proposed action will not result in a change in nonradiological plant effluents and will have no other nonradiological environmental impact.

Accordingly, the Commission concludes that there are no environmental impacts associated with this action.

Alternatives to the Proposed Action

As an alternative to the proposed action, the staff considered denial of the proposed action. Denial of the application would result in no change in current environmental impacts. The environmental impacts of the proposed action and the alternative action are similar.

Alternative Use of Resources

This action does not involve the use of any resources not previously considered in the ''Final Environmental Statement Related to the Operation of South Texas Project, Units 1 and 2,'' dated August 1986, in NUREG–1171.

Agencies and Persons Consulted

In accordance with its stated policy, on August 12, 1998, the staff consulted with the Texas State official regarding the environmental impact of the proposed action. The State official had no comments.

Finding of No Significant Impact

Based upon the environmental assessment, the Commission concludes that the proposed action will not have a significant effect on the quality of the human environment. Accordingly, the Commission has determined not to prepare an environmental impact statement for the proposed action.

For further details with respect to the proposed action, see the application from CPL dated June 16, 1998, submitted under cover of a letter dated June 19, 1998, from Shaw, Pittman, Potts, and Trowbridge, counsel for CPL, and supplemental letter dated June 23, 1998, and enclosures thereto. These documents are available for public inspection at the Commission's Public Document Room, The Gelman Building, 2120 L Street, NW., Washington, DC 20555, and at the local public document room located at the Wharton County Junior College, J.M. Hodges Learning Center, 911 Boling Highway, Wharton TX 77488.

Dated at Rockville, Maryland, this 22nd day of September 1998.

For the Nuclear Regulatory Commission.

John N. Hannon,

Director, Project Directorate IV–1, Division of Reactor Projects III/IV, Office of Nuclear Reactor Regulation.

[FR Doc. 98–25833 Filed 9–25–98; 8:45 am]

BILLING CODE 7590–01–P

SECURITIES AND EXCHANGE COMMISSION

[Rel. No. IC–23443; File No. 812–11194]

London Pacific Life & Annuity Company, et al.; Notice of Application

September 22, 1998.

AGENCY: Securities and Exchange Commission (''SEC'' or ''Commission'').

ACTION: Notice of application for an order under Section 26(b) of the Investment Company Act of 1940 (''Act'') approving the proposed substitution of securities.

SUMMARY OF APPLICATION: Applicants seek an order approving the substitution of shares of the International Magnum Portfolio (''IM Portfolio'') of Morgan Stanley Universal Funds, Inc. (''Fund'') for shares of the International Stock Portfolio (''IS Portfolio'') of LPT Variable Insurance Series Trust (''Trust'') held by Separate Account One to fund certain variable annuity contracts (''Contracts'') issued by London Pacific Life & Annuity Company.

APPLICANTS: London Pacific Life & Annuity Company (''London Pacific'') and LPLA Separate Account One (''Separate Account One'').

FILING DATES: The application was filed on June 24, 1998.

HEARING OR NOTIFICATION OF HEARING: An order granting the application will be issued unless the SEC orders a hearing. Interested persons may request a hearing by writing the Secretary of the SEC and serving Applicants with a copy of the request, in person or by mail. Hearing requests should be revised by the SEC by 5:30 p.m. on October 19, 1998, and should be accompanied by proof of service on Applicants, in the form of an affidavit or, for lawyers, a certificate of service. Hearing requests should state the nature of the writer's interest, the reason for the request, and the issues contested. Persons who wish to be notified of a hearing may request notification of a hearing by writing to the Secretary of the SEC.

ADDRESSES: Secretary, SEC, 450 Fifth Street, NW, Washington, DC 20549. Applicants, George C. Nicholson, London Pacific Life 7 Annuity Company, 3109 Poplarwood Court, Raleigh, North Carolina 27604.

FOR FURTHER INFORMATION CONTACT: Elisa Metzger, Senior Counsel, or Mark Amorosi, Branch Chief, Office of Insurance Products (Division of Investment Management), at (202) 942–0670.

SUPPLEMENTARY INFORMATION: The following is a summary of the application. The complete application is available for a fee from the Public Reference Branch of the SEC, 450 Fifth Street, NW, Washington DC 20549 or call (202) 942–8090.

Applicants' Representations

1. London Pacific, a stock life insurance company, is engaged in selling life insurance and annuities. London Pacific's ultimate parent is London Pacific Group Limited, an international fund management firm chartered in Jersey, Channel Islands. London Pacific is the depositor for Separate Account One.

2. Separate Account One is a separate account established by London Pacific for the purpose of funding the Contracts. Separate Account One is registered under the Act as a unit investment trust (File No. 811–8890) and interests in Separate Account One have been registered under the Securities Act of 1933 (''1933 Act'') (File Nos. 33–87150 and 333–1779). Separate Account One currently is divided into sub-accounts (''Sub-Accounts''), each of which reflects the investment performance of a corresponding portfolio of an underlying mutual fund.

3. LPIMC Insurance Marketing Services (''LPIMC''), a registered investment adviser and wholly-owned subsidiary of London Pacific, is the investment adviser to the Trust and provides overall management of the investment strategies and policies of the IS Portfolio. In addition to the other duties which LPIMC was performing in its role as investment adviser to the IS Portfolio, it assumed the portfolio management function of the IS Portfolio on June 1, 1998, upon termination of the prior advisory agreement.

4. The primary investment objective of the IS Portfolio is to seek capital growth. The IS Portfolio invests primarily in the equity securities of issuers located outside of the United States. Shares of the IS Portfolio of the Trust are purchased, without sales charge, by the International Stock Sub-Account (''IS Sub-Account'') of Separate Account One at the net asset value per share next determined following receipt of a purchase payment by the IS Sub-Account. Shares of the IS Portfolio are redeemed without any charge or fee to Separate Account One.

5. As of June 18, 1998, the IS Portfolio had approximately $447,000 in net assets (of which approximately $297,000 consisted of London Pacific's seed money and working capital contributions). The total expenses of the IS Portfolio for the year ended December 3, 1997, were 6.81% of its average net assets, without regard to any expense reimbursement by London Pacific. London Pacific has voluntarily agreed, through December 31, 1998, to reimburse the IS Portfolio for certain expenses, excluding brokerage commissions, in excess of approximately 1.49% annually. This undertaking is subject to termination at any time. Effective May 1, 1998, shares of the IS Portfolio are no longer available for sale.

6. Morgan Stanley Asset Management, Inc. (''MSAM''), a registered investment adviser and subsidiary of Morgan Stanley Dean Witter & Co., is the investment adviser for the IM Portfolio of the Fund. The primary investment objective of the IM Portfolio is to seek long-term capital appreciation. The IM Portfolio invests primarily in common and preferred stocks, convertible securities, rights or warrants to purchase common stocks and other equity securities of non-U.S. issuers domiciled in EAFE countries (including Australia, Japan, New Zealand, most nations located in Western Europe and certain developed countries in Asia, such as Hong Kong and Singapore).

7. On June 18, 1998, the IM Portfolio had approximately $38.4 million in net

assets. For the period ended December 31, 1997, the IM Portfolio's total expenses were 2.78% of its average net assets without regard to waiver of fees or reimbursement of expenses undertaken by MSAM. MSAM has voluntarily agreed to waive receipt of its management fee and to reimburse the IM Portfolio, if necessary, if such fees and expenses would cause the total annual operating expenses of the IM Portfolio to exceed 1.15% annually. This fee waiver and expense reimbursement arrangement is voluntary and may be terminated by MSAM at any time without notice.

8. London Pacific currently limits transfers under the Contracts so that each transfer must involve a minimum of $500, or the entire interest of the owner of the Contract (''Contract Owner''), if less. In addition, a partial transfer will not be permitted if the value of any Sub-Account after the transfer would be less than $500. A maximum of 12 free transfers may be made by Contract Owners in any Contract year.

9. Applicants propose that London Pacific effect a substitution of shares of the IM Portfolio for shares of the IS Portfolio attributable to the Contracts (''Substitution'') on the following basis. On the effective date of the Substitution, London Pacific will simultaneously place an order to redeem the shares of the IS Portfolio and an order to purchase shares of the IM Portfolio with the proceeds of the redemption. The Substitution will be a cash transaction. Applicants state that the Substitution will take place at relative net asset values of the IS and IM Portfolios, with no change in any Contract Owner's contract value or in the dollar value of his or her investment in Separate Account One.

10. Applicants state that Contract Owners will not incur any fees or charges as a result of the Substitution as London Pacific will pay all expenses and transaction costs of the Substitution, including any applicable legal and accounting fees, brokerage commissions, and other fees and expenses. Applicants also state that, following the Substitution, Contract Owners will be afforded the same Contract rights, including transfer and surrender rights with regard to amounts invested under the Contracts. Applicants represent that the Substitution will not impose any tax liability on Contract Owners and will not cause the Contract fees and charges to be greater after the Substitution than before the Substitution.

11. Applicants state that, on June 1, 1998, London Pacific supplemented the prospectus for Separate Account One to reflect the proposed Substitution. The supplement also advised Contract Owners that, prior to the date of the Substitution, an owner may transfer his or her Contract value in the International Stock Sub-Account to any other Sub-Account of Separate Account One without limitation or charge being imposed.

12. Applicants state that within five days after the completion of the Substitution pursuant to any order of the Commission approving the Substitution, London Pacific will sent to affected Contract Owners written notice of the Substitution (''Notice'') stating that shares of the IS Portfolio have been eliminated and that shares of the IM Portfolio have been substituted. Applicants state that Contract Owners also will be advised in the Notice that for a period of thirty days from the mailing of the Notice (''Free Transfer Period''), they may transfer all assets, as substituted, to any other available Sub-Account, without limitation and without charge.

13. Applicants also state that the prospectuses of Separate Account One and the Contracts include provision that reserve the right to effect substitution in compliance with applicable law or undertake to provide notice to the extent required by the Act.

Applicants' Legal Analysis and Conditions

1. Applicants request an order of the Commission pursuant to Section 26(b) of the Act approving the proposed substitution of shares of the IM Portfolio of the Fund for shares of the IS Portfolio of the Trust which currently are held by Separate Account One.

2. Section 26(b) of the Act makes it unlawful for any depositor or trustee of a register unit investment trust holding the security of a single issuer to substitute another security for such security unless the Commission has approved such substitution. Section 26(b) also provides that the Commission shall issue an order approving such substitution if the evidence establishes that it is consistent with the protection of investors and the purposes fairly intended by the policy and provisions of the Act.

3. Applicants assert that the Substitution is an appropriate solution to the limited Contract Owner interest or investment in the IS Portfolio, which currently is, and in the future may be expected to be, of insufficient size to promote consistent investment performance or to reduce operating expenses. Applicants state that the IS Portfolio has not generated the interest of Contract Owners that was anticipated at the time of its creation and that IS Portfolio's assets have not increased to a level to make it a viable investment option. Applicants state that the total expense ratio of 6.81% for the IS Portfolio for the year ended December 31, 1998, without regard to waiver or reimbursement of expenses undertaking by London Pacific, is relatively high for this type of portfolio. Applicants maintain that since most of the IS Portfolio's expenses are fixed and the size of the IS Portfolio is relatively small, these fixed expenses currently represent and may continue to represent a relatively large percentage of the IS Portfolio's average daily net assets.

4. Applicants asset that Contract Owners will not be exposed to higher expenses following the Substitution and should, in fact, benefit from the IM Portfolio's lower total expense ratio, which was 2.78% for the year ended December 31, 1997, without regard to waiver or reimbursement of expenses undertaken by MSAM. Applicants state that the IM Portfolio had about $18.8 million in net asset after approximately twelve months of operation and that the IS Portfolio had about $1.5 million in net assets representing Contract values after approximately twenty three months of operation. Applicants maintain that the prospects for continued growth of the IM Portfolio indicate that greater economics of scale can be expected for the IM Portfolio than for the IS Portfolio.

5. Applicants also state that due to the relatively small size of the IS Portfolio, there are a limited number of attractive security issues available for investment by the IS Portfolio. Applicants assert that the large size of the IM Portfolio lends itself to greater flexibility in purchasing attractive securities and that the IM Portfolio can more readily react to changes in market conditions. Applicants also believe that Contract Owners would benefit through the more effective management of a larger portfolio such as the IM Portfolio.

6. Applicants state that the purposes, terms and conditions of the Substitution are consistent with the principles and purposes of Section 26(b) and do not entail any of the abuses that Section 26(b) is designed to prevent. In particular, Applicants maintain that the Substitution will not result in the type of costly forced redemptions that Section 26(b) was intended to guard against and is consistent with the protection of investors and the purposes fairly intended by the Act for the following reasons:

(a) The Substitution is of shares of the IS Portfolio whose objectives, policies

and restrictions are substantially similar to the objectives, policies and restrictions of the IM Portfolio so as to continue fulfilling the Contract Owners' objectives and risk expectations;

(b) While the advisory fees incurred for the IM Portfolio are somewhat higher than those incurred by the IS Portfolio, through December 31, 1997, the total expenses, without regard to any waiver or reimbursements, incurred by the IM Portfolio were 2.78%, while the total expenses for the IS Portfolio were 6.81%;

(c) If a Contract Owner so requests, during the Free Transfer Period, assets will be reallocated for investment in a Contract Owner-selected sub-account. The Free Transfer Period is sufficient time for Contract Owners to reconsider the Substitution;

(d) The Substitution will, in all cases, be at net asset value of the respective shares, without the imposition of any transfer or similar charge;

(e) London Pacific has undertaken to assume the expenses and transaction costs, including among others, legal and accounting fees and any brokerage commissions, relating to the Substitution in a manner that attributes transaction costs to London Pacific;

(f) The Substitution in no way will alter the insurance benefits to Contract Owners or the contractual obligations of London Pacific;

(g) The Substitution in no way will alter the tax benefits to the Contract Owners;

(h) Contract Owners may choose simply to withdraw amounts credited to them following the Substitution under the conditions that currently exist, subject to any applicable deferred sales charge; and

(i) The Substitution is expected to confer certain economic benefits to Contract Owners by virtue of the enhanced asset size.

Conclusion

Applicants submit that, for all of the reasons and facts summarized herein, the requested order approving the proposed substitution under Section 26(b) of the Act is consistent with the protection of investors and the purposes fairly intended by the policy and provisions of the Act.

For the Commission, by the Division of Investment Management, pursuant to delegated authority.

Jonathan Katz,

Secretary.

[FR Doc. 98–25823 Filed 9–25–98; 8:45 am]

BILLING CODE 8010–01–M

SECURITIES AND EXCHANGE COMMISSION

Issuer Delisting; Notice of Application To Withdraw From Listing and Registration; (Room Plus, Inc., Common Stock, $.00133 Par Value; Redeemable Common Stock Purchase Warrants) File No. 1–14478

September 22, 1998.

Room Plus, Inc. (''Company'') has filed an application with the Securities and Exchange Commission (''Commission''), pursuant to Section 12(d) of the Securities Exchange Act of 1934 (''Act'') and Rule 12d2–2(d) promulgated thereunder, to withdraw the above specified securities (''Securities'') from listing and registration on the Boston Stock Exchange, Inc. (''BSE'' or ''Exchange'').

The reasons cited in the application for withdrawing the Securities from listing and registration include the following:

The Company's Securities have been listed for trading on the BSE and the Nasdaq since November 1, 1996.

In making the decision to withdraw its Securities from listing on the BSE, the Company considered the direct and indirect costs and expenses attendant on maintaining the dual listing of its Securities on the Nasdaq and the BSE. The Company does not see any particular advantage in the dual trading of its Securities and believes that dual listing would fragment the market for its Securities.

The Company has complied with the rules of the Exchange by filing a certified copy of the resolution adopted by the Company's Board of Directors authorizing the withdrawal of its Securities from listing and registration on the Exchange and by setting forth in detail to the Exchange the reasons for the proposed withdrawal.

By letter dated August 26, 1998, the Exchange informed the Company that it would not object to the withdrawal of the Company's Securities from listing and registration on the BSE.

The withdrawal from listing of the Company's Securities from the BSE has no effect upon the continued listing of the Securities on the Nasdaq.

By reason of Section 12 of the Act and the rules thereunder, the Company shall continue to be obligated to file reports under Section 13 of the Act with the Commission and the Nasdaq.

Any interested person may, on or before October 13, 1998, submit by letter to the Secretary of the Securities and Exchange Commission, 450 Fifth Street, NW, Washington, DC 20549, facts bearing upon whether the application has been made in accordance with the rule of the Exchange and what terms, if any, should be imposed by the Commission for the protection of investors. The Commission, based on the information submitted to it, will issue an order granting the application after the date mentioned above, unless the Commission determines to order a hearing on the matter.

For the Commission, by the Division of Market Regulation, pursuant to delegated authority.

Jonathan G. Katz,

Secretary.

[FR Doc. 98–25821 Filed 9–25–98; 8:45 am]

BILLING CODE 8010–01–M

SECURITIES AND EXCHANGE COMMISSION

Issuer Delisting; Notice of Application To Withdraw From Listing and Registration; (Specialty Teleconstructors, Inc., Common Stock, $.01 Par Value) File No. 1–13272

September 22, 1998.

Specialty Teleconstructors, Inc. (''Company'') has filed an application with the Securities and Exchange Commission (''Commission''), pursuant to Section 12(d) of the Securities Exchange Act of 1934 (''Act'') and Rule 12d2–2(d) promulgated thereunder, to withdraw the above specified security (''Security'') from listing and registration on the Pacific Exchange, Inc. (''PCX'' or ''Exchange'').

The reasons cited in the application for withdrawing the Security from listing and registration include the following:

The Security is listed for trading on the PCX and the Nasdaq.

In making the decision to withdraw its Security from listing on the Exchange, the Company considered the direct and indirect costs and expenses attendant on maintaining the dual listing of its Security on the Nasdaq and the PCX. The Company does not see any particular advantage in the dual trading of its Security and believes that dual listing would fragment the market for its Security.

The Company has complied with Exchange Rule 3.4 by filing with the Exchange a certified copy of the resolutions adopted by the Company's Board of Directors authorizing the withdrawal of its Security from listing and registration on the Exchange and by setting forth in detail to the Exchange the facts and reasons supporting the proposed withdrawal.

By letter dated August 5, 1998, the Exchange informed the Company that it

would not object to the withdrawal of the Company's Security from listing and registration on the PCX.

This application relates solely to the withdrawal of the Company's Security from listing on the Exchange and has no effect upon the continued listing of the Security on the Nasdaq.

By reason of Section 12 of the Act and the rules and regulations thereunder, the Company shall continue to be obligated to file reports under Section 13 of the Act with the Commission and the Nasdaq.

Any interested person may, on or before October 13, 1998, submit by letter to the Secretary of the Securities and Exchange Commission, 450 Fifth Street, NW., Washington, DC 20549, facts bearing upon whether the application has been made in accordance with the rules of the Exchange and what terms, if any, should be imposed by the Commission for the protection of investors. The Commission, based on the information submitted to it, will issue an order granting the application after the date mentioned above, unless the Commission determines to order a hearing on the matter.

For the Commission, by the Division of Market Regulation, pursuant to delegated authority.

Jonathan G. Katz,

Secretary.

[FR Doc. 98–25822 Filed 9–25–98; 8:45 am]

BILLING CODE 8010–01–M

SOCIAL SECURITY ADMINISTRATION

Agency Information Collection Activities: Proposed Collection Requests

This notice lists information collection packages that will require submission to the Office of Management and Budget (OMB), in compliance with Pub. L. 104–13 effective October 1, 1995, The Paperwork Reduction Act of 1995.

Time Report of Personnel Services for Disability Determinination Services—0960–0408. Form SSA–4514 is used by the Social Security Administration (SSA) to collect data necessary for detailed analysis and evaluation of costs incurred by State Disability Determination Services (DDS) in making determinations of disability for SSA. The data are also used in determining funding levels for each DDS. The respondents are State DDSs making determinations of disability for SSA.

Number of Respondents: 54.

Frequency of Response: 4.

Average Burden Per Response: 30 minutes.

Estimated Annual Burden: 108 hours.

Written comments and recommendations regarding the information collection(s) should be sent within 60 days from the date of this publication, directly to the SSA Reports Clearance Officer at the following address: Social Security Administration, DCFAM, Attn: Frederick W. Brickenkamp, 6401 Security Blvd., 1–A–21 Operations Bldg., Baltimore, MD 21235.

In addition to your comments on the accuracy of the agency's burden estimate, we are soliciting comments on the need for the information; its practical utility; ways to enhance its quality, utility and clarity; and on ways to minimize burden on respondents, including the use of automated collection techniques or other forms of information technology.

To receive a copy of any of the forms or clearance packages, call the SSA Reports Clearance Officer on (410) 965–4145 or write to him at the address listed above.

Dated: September 17, 1998.

Frederick W. Brickenkamp,

Reports Clearance Officer, Social Security Administration.

[FR Doc. 98–25764 Filed 9–25–98; 8:45 am]

BILLING CODE 4190–29–P

DEPARTMENT OF STATE

Inspector General

[Public Notice 2891]

State Department Performance Review Board Members (Office of Inspector General)

In accordance with section 4314(c)(4) of the Civil Service Reform Act (Pub. L. 95–454), the Office of Inspector General of the Department of State has appointed the following individuals to its Performance Review Board register.

Lloyd Pratsch, Procurement Executive, Office of the Procurement Executive, Department of State

Michael G. Sullivan, Assistant Inspector General for Auditing, Department of Veterans Affairs

Harvey Thorp, Assistant Inspector General for Audit, Office of Personnel Management

Dated: September 21, 1998.

Jacquelyn L. Williams-Bridgers,

Inspector General.

[FR Doc. 98–25866 Filed 9–25–98; 8:45 am]

BILLING CODE 4710–42–M

DEPARTMENT OF TRANSPORTATION

Office of the Secretary

Aviation Proceedings, Agreements Filed During the Week Ending September 18, 1998

The following Agreements were filed with the Department of Transportation under the provisions of 49 U.S.C. Sections 412 and 414. Answers may be filed within 21 days of date of filing.

Docket Number: OST–98–4444.
Date Filed: September 14, 1998.
Parties: Members of the International Air Transport Association.
Subject:
COMP Telex Mail Vote 955
Change in Intended Effective Date for Reso 015v
Intended effective date: October 1, 1998.

Docket Number: OST–98–4456.
Date Filed: September 16, 1998.
Parties: Members of the International Air Transport Association.
Subject:
PSC/Reso/093 dated August 4, 1998
Recommended Practice 1724 (r1)
(PSC/Minutes/003 dated August 4, 1998)
Intended effective date: March 1, 1999.

Docket Number: OST–98–4461.
Date Filed: September 18, 1998.
Parties: Members of the International Air Transport Association.
Subject:
PTC2 EUR 0209 dated September 15, 1998 r1
PTC2 EUR 0210 dated September 15, 1998 r2–16
PTC2 EUR 0211 dated September 15, 1998 r17
PTC2 EUR 0212 dated September 15, 1998 r18–22
PTC2 EUR 0213 dated September 15, 1998 r23–27
PTC2 EUR 0214 dated September 15, 1998 r28
PTC2 EUR 0208 dated September 8, 1998 Minutes
Intended effective date—as early as November 15, 1998.

Docket Number: OST–98–4462.
Date Filed: September 18, 1998.
Parties: Members of the International Air Transport Association.
Subject:
PTC1 0086 dated September 1, 1998
Areawide Resolutions r1–4
PTC1 0088 dated September 1, 1998
Longhaul Resolutions r5–52
PTC1 0090 dated September 15, 1998—Minutes
PTC1 Fares 0031 dated September 1, 1998—Tables
Intended effective date: January 1,

1999.

Docket Number: OST–98–4464.

Date Filed: September 18, 1998.

Parties: Members of the International Air Transport Association.

Subject:

PTC1 0087 dated September 1, 1998

Caribbean Resolutions r1–14

PTC1 0089 dated September 1, 1998

Within South America Resolutions r15–27

PTC1 Fares 0030 dated September 1, 1998 Tables

Intended effective date: January 1, 1999.

Dorothy W. Walker,

Federal Register Liaison.

[FR Doc. 98–25817 Filed 9–25–98; 8:45 am]

BILLING CODE 4910–62–P

DEPARTMENT OF TRANSPORTATION

Office of the Secretary

Notice of Applications for Certificates of Public Convenience and Necessity and Foreign Air Carrier Permits Filed Under Subpart Q During the Week Ending September 18, 1998

The following Applications for Certificates of Public Convenience and Necessity and Foreign Air Carrier Permits were filed under Subpart Q of the Department of Transportation's Procedural Regulations (See 14 CFR 302.1701 *et seq.*). The due date for Answers, Conforming Applications, or Motions to Modify Scope are set forth below for each application. Following the Answer period DOT may process the application by expedited procedures. Such Procedures may consist of the adoption of a show-cause order, a tentative order, or in appropriate cases a final order without further proceedings.

Docket Number: OST–98–4446.

Date Filed: September 14, 1998.

Due Date for Answers, Conforming Applications, or Motions to Modify Scope: October 12, 1998.

Description: Application of Winair, Inc. pursuant to 49 U.S.C. Section 41102 and Subpart Q, applies for a certificate of public convenience and necessity to engage in scheduled interstate air transportation of persons, property and mail.

Dorothy W. Walker,

Federal Register Liaison.

[FR Doc. 98–25816 Filed 9–25–98; 8:45 am]

BILLING CODE 4910–62–P

DEPARTMENT OF TRANSPORTATION

Federal Aviation Administration

Air Traffic Procedures Advisory Committee

AGENCY: Federal Aviation Administration (FAA), DOT.

ACTION: Notice of meeting.

SUMMARY: The FAA is issuing this notice to advise the public that a meeting of the Federal Aviation Administration Air Traffic Procedures Advisory Committee (ATPAC) will be held to review present air traffic control procedures and practices for standardization, clarification, and upgrading of terminology and procedures.

DATES: The meeting will be held from October 5–8, from 9 a.m. to 5 p.m. each day.

ADDRESSES: The meeting will be held at Federal Aviation Administration Headquarters, 800 Independence Avenue, SW., Washington, DC 20591.

FOR FURTHER INFORMATION CONTACT: Mr. Eric Harrell, Executive Director, ATPAC, En Route/Terminal Operations and Procedures Division, 800 Independence Avenue, SW., Washington, DC 20591, telephone (202) 267–3725.

SUPPLEMENTARY INFORMATION: Pursuant to Section 10(a)(2) of the Federal Advisory Committee Act (Pub. L. 92–463; 5 U.S.C. App. 2), notice is hereby given of a meeting of the ATPAC to be held October 5 through 8, 1998, at the Federal Aviation Administration, 800 Independence Avenue, SW., Washington, DC 20591.

The agenda for this meeting will cover: a continuation of the Committee's review of present air traffic control procedures and practices for standardization, clarification, and upgrading of terminology and procedures. It will also include:

1. Approval of Minutes.
2. Submission and Discussion of Areas of Concern.
3. Discussion of Potential Safety Items.
4. Report from Executive Director.
5. Items of Interest.
6. Discussion and agreement of location and dates for subsequent meetings.

Attendance is open to the interested public but limited to the space available. With the approval of the Chairperson, members of the public may present oral statements at the meeting. Persons desiring to attend and persons desiring to present oral statements should notify the person listed above not later than October 2, 1998. The next quarterly meeting of the FAA ATPAC is planned to be held from January 11–14, 1999, in West Palm Beach, Florida.

Any member of the public may present a written statement to the Committee at any time at the address given above.

Issued in Washington, DC, on September 8, 1998.

Eric Harrell,

Executive Director, Air Traffic Procedures Advisory Committee.

[FR Doc. 98–25762 Filed 9–25–98; 8:45 am]

BILLING CODE 4910–13–M

DEPARTMENT OF TRANSPORTATION

Federal Aviation Administration

RTCA Special Committee 193/EUROCAE Working Group 44; Terrain and Airport Databases

Pursuant to section 10(a)(2) of the Federal Advisory Committee Act (Pub. L. 92–463, 5 U.S.C., Appendix 2), notice is hereby given for a Special Committee 193/EUROCAE Working Group 44 meeting to be held October 12–16, 1998, starting at 9:00 a.m. on October 12. The meeting will be held at Service Technique de la Navigation Aerienne (STNA), 1 Rue du Docteur Maurice Grynfogel, Toulouse, France. Non-European citizens should provide name, company, phone, date of birth, private address, passport number and issue date, and Toulouse hotel information to Mr. Philippe Caisso, STNA, by fax (001 33 5 62 14 58 53) or e-mail (caisso__philippe@stna.dgac.fr) by October 5 in order to coordinate access to the STNA facility.

The agenda will be as follows: Monday, October 12, 9:00–11:00 a.m. Plenary Session: (1) Chairmen's Introductory Remarks; (2) Review/Approval of Meeting Agenda; (3) Review of Summary of the Previous Meeting; (4) Review of the Terms of Reference as approved by the RTCA Program Management Committee; (5) Need for Generic Data Exchange Formats; (6) Obstacle vs. Cultural Features; (7) Merging of Terrain, Obstacle, and Airport Data; 11:00 a.m.–5:00 p.m. Subgroup 2 (Terrain and Obstacle Databases): (8) Review of Summary of the Previous Meeting; (9) Review of actions taken during the first meeting; (10) Presentations: Characterization of digital terrain models; (11) The Database Life Cycle Model; (12) Applications for Terrain and Obstacle Database; (13) Review of the Draft Document. Tuesday, October 13, 9:00 a.m.–5:00 p.m. Subgroup 2 (Terrain and Obstacle Databases); (14) Continuation of previous day's

discussions. Wednesday, October 14, 9:00 a.m.–5:00 p.m. Subgroup 3 (Airport Databases). Thursday, October 15, 9:00 a.m.–3:30 p.m. Closing Plenary Session: (15) Summary of Subgroup 2 and 3 Meetings; (16) Assign Tasks; (17) Other Business; (18) Dates and Locations of Next Meetings; (19) Adjourn. Friday, October 16, 9:00 a.m.–5:00 p.m. Subgroup 1 (Terrain Awareness and Warning System TSO Review): (20) Review of FAA TSO–C151 for Terrain Awareness and Warning System; (21) Establish a list of comments.

Attendance is open to the interested public but limited to space availability. With the approval of the chairmen, members of the public may present oral statements at the meeting. Persons wishing to present statements or obtain information should contact the RTCA Secretariat, 1140 Connecticut Avenue, NW., Washington, DC, 20036; (202) 833–9339 (phone), (202) 833–9434 (fax), or http://www.rtca.org (web site). Members of the public may present a written statement to the committee at any time.

Issued in Washington, DC, on September 21, 1998.

Janice L. Peters,

Designated Official.

[FR Doc. 98–25870 Filed 9–25–98; 8:45 am]

BILLING CODE 4910–13–M

DEPARTMENT OF TRANSPORTATION

Federal Aviation Administration

Announcement of Receipt of Proposed Restriction on Operations of Stage 2 Aircraft at San Francisco International Airport, San Francisco, California

AGENCY: Federal Aviation Administration, DOT.

ACTION: Notice.

SUMMARY: The Federal Aviation Administration (FAA) has been notified by San Francisco International Airport that it proposes to amend its current Noise Abatement Regulation 4(C), which currently restricts operation of Stage 2 aircraft between 11:00 and 7:00 a.m., locally, by extending the restricted hours to between 7:00 p.m. to 7:00 a.m. local time. The San Francisco International Airport has provided notice of the proposed restriction and an opportunity to comment to the public, pursuant to the Airport Noise and Capacity Act of 1990, and 14 CFR 161.203.

EFFECTIVE DATE: In its notice, published on August 14, 15, and 17, 1998 in the *San Francisco Examiner*, the San Francisco International Airport indicated that the effective date of the proposed restriction is March 5, 1999.

FOR FURTHER INFORMATION CONTACT: Ms. Jean Caramatti, Secretary to the San Francisco Airport Commission, San Francisco International Airport, International Terminal, Fifth Floor, P.O. Box 8097, San Francisco, California 94128, Telephone: 650/794–5000. Copies of the complete text of the proposed restriction and the supporting analysis may be obtained by making a request in writing to the above address. These documents are also made available for public inspection at the above office upon written request.

SUPPLEMNTARY INFORMATION: This notice announces FAA's notification by San Francisco International Airport (SFO) that it proposes to amend its current Noise Abatement Regulation 4(C), which currently restricts operation of Stage 2 aircraft between 11:00 p.m. and 7:00 a.m., locally, and requires operators to agree to adhere to SFO's preferential runway use program in order to operate aircraft during those hours. The proposed restriction expands the current restriction on nighttime operation of Stage 2 aircraft by (1) extending the restricted hours to 7:00 p.m. to 7:00 a.m. local time, (2) requiring operators to agree to adhere to SFO's preferential runway use program in order to operate aircraft during those hours, and (3) eliminating the existing exemption from restriction of operations between the hour of 6:00 a.m. to 7:00 a.m. local time, for Stage 2 aircraft operators that agree to adhere to SFO's preferential runway use program. The proposed effective date for the proposed restriction is March 5, 1999. Public comments on the proposed restriction must be submitted directly to the individual named above under the heading **FOR FURTHER INFORMATION CONTACT** and must be received on or before October 23, 1998.

Issued in Hawthorne, California on September 14, 1998.

Herman C. Bliss,

Manager, Airports Division, AWP–600, Western-Pacific Region.

[FR Doc. 98–25865 Filed 9–25–98; 8:45 am]

BILLING CODE 1410–13–M

DEPARTMENT OF TRANSPORTATION

Federal Aviation Administration

Intent To Rule on Application To Impose and Use the Revenue From a Passenger Facility Charge (PFC) at Michiana Regional Transportation Center, South Bend, IN

AGENCY: Federal Aviation Administration (FAA), DOT.

ACTION: Notice of intent to rule on application.

SUMMARY: The FAA proposes to rule and invites public comment on the application to impose and use the revenue from a PFC at Michiana Regional Transportation Center under the provisions of the Aviation Safety and Capacity Expansion Act of 1990 (Title IX of the Omnibus Budget Reconciliation Act of 1990) (Pub. L. 101–508) and part 158 of the Federal Aviation Regulations (14 CFR part 158).

DATES: Comments must be received on or before October 28, 1998.

ADDRESSES: Comments on this application may be mailed or delivered in triplicate to the FAA at the following address: Federal Aviation Administration, Chicago Airports District Office, 2300 East Devon Avenue, Room 201, Des Plaines, Illinois 60018.

In addition, one copy of any comments submitted to the FAA must be mailed or delivered to Mr. John C. Schalliol, Director, Michiana Regional Transportation Center of the St. Joseph County Airport Authority at the following address: St. Joseph County Airport Authority, Michiana Regional Transportation Center, 4477 Terminal Drive, South Bend, Indiana 46628.

Air carriers and foreign air carriers may submit copies of written comments previously provided to the St. Joseph County Airport Authority under § 158.23 of part 158.

FOR FURTHER INFORMATION CONTACT: Mr. Gregory N. Sweeny, Program Manager, Chicago Airports District Office, 2300 East Devon Avenue, Room 201, Des Plaines, Illinois 60018, (847) 294–7526. The application may be reviewed in person at this same location.

SUPPLEMENTARY INFORMATION: The FAA proposes to rule and invites public comment on the application to impose and use the revenue from a PFC at Michiana Regional Transportation Center under the provisions of the Aviation Safety and Capacity Expansion Act of 1990 (Title IX of the Omnibus Budget Reconciliation Act of 1990) (Pub. L. 101–508) and part 158 of the

Federal Aviation Regulations (14 CFR part 158).

On September 14, 1998, the FAA determined that the application to impose and use the revenue from a PFC submitted by St. Joseph County Airport Authority was substantially complete within the requirements of § 158.25 of part 158. The FAA will approve or disapprove the application, in whole or in part, no later than December 18, 1998.

The following is a brief overview of the application.

PFC application number: 98–02–C–00–SBN.

Level of the PFC: $3.00.

Original charge effective date: November 1, 1994.

Revised proposed charge expiration date: December 31, 2003.

Total estimated PFC revenue: $1,367,991.00.

Brief description of proposed projects: Hold Room ''C'' Improvements; Relocate Terminal Entrance Road; Local Share.

Reimbursement: Terminal Apron Rehabilitation, Lighting System Rehabilitation, Widen Runway 18/36, Hold Room ''A'' Improvements, Install Flight Information Display System, Widen and Strengthen Taxiways A and A–1, Airfield Clearing for Line-of-Sight and Animal Damage Control.

Class or classes of air carriers which the public agency has requested not be required to collect PFCs: on-demand FAR Part 135 Air Taxi Operators with less than 15 seats.

Any person may inspect the application in person at the FAA office listed above under **FOR FURTHER INFORMATION CONTACT**. In addition, any person may, upon request, inspect the application, notice and other documents germane to the application in person at the St. Joseph County Airport Authority.

Issued in Des Plaines, IL, on September 21, 1998.

Nancy M. Nistler,

Acting Manager, Planning/Programming Branch, Airports Division, Great Lakes Region.

[FR Doc. 98–25872 Filed 9–25–98; 8:45 am]

BILLING CODE 4910–13–M

DEPARTMENT OF TRANSPORTATION

Federal Railroad Administration

[Waiver Petition Docket No. H–98–2]

Petition for Waiver of Compliance; Amendment to Notice

In accordance with Part 211 of Title 49 Code of Federal Regulations (CFR), notice is hereby given that the Federal Railroad Administration (FRA) received from the National Railroad Passenger Corporation (Amtrak) a request for waiver of compliance with certain requirements of 49 CFR Part 213: TRACK SAFETY STANDARDS.

On July 15, 1998, FRA advised that Amtrak sought to conduct testing and demonstrations of the Spanish Talgo trainset at operating speeds up to 125 mph and up to four inches of cant deficiency on the Northeast Corridor and requested relief from the requirements of the track safety standards. Amtrak does not seek to operate the Talgo in revenue service on the Northeast Corridor. See **Federal Register** Notice, Docket No. H–98–2, Volume 63, No. 135. This notice advises that relief from the requirements of 49 CFR 213.9, Classes of track, to operate at more than 110 mph is no longer necessary because the track safety standards have recently been revised permitting speeds up to 200 mph in accordance with the provisions of Subpart G. In addition, relief from the requirements of Section 213.57, Curves; Elevations and Speed Limitations, is not necessary since the level of cant deficiency (unbalance) may exceed 3 inches under the new standards. See Sections 213.307, Class of Track: operating speed limits; and 213.329, Curves, elevation and speed limitations; **Federal Register** Volume 63, Number 119, dated June 22, 1998. These provisions become effective on September 21, 1998.

However, in order to conduct the testing and demonstrations, FRA notes that relief from Section 213.345(b), Vehicle Qualification Testing, is necessary. This section in part requires the use of instrumented wheelsets to measure wheel/rail forces. Amtrak advises that no instrumented wheels are available for the unique wheel/axle arrangement on the Talgo cars where each wheel is individually mounted. Instead, Amtrak proposes to conduct simulation studies and install strain gauges in the track itself to confirm that the wheel/rail forces are within acceptable limits.

Amtrak anticipates the testing and demonstrations will be completed within three days after commencement. Following the successful completion of the testing, Amtrak seeks to conduct three ''VIP'' demonstration trips between Washington, D.C., and Philadelphia, Pennsylvania.

Amtrak and the State of Washington jointly purchased a total of three Talgo trainsets which are currently in production in Seattle, Washington. The Amtrak and Washington State contracts require Talgo to demonstrate lateral stability at speeds up to 125 mph before the cars can be accepted, and Amtrak states that this testing can only be accomplished on the Northeast Corridor.

Amtrak states that Talgo trainsets routinely operate at up to 125 mph and seven inches of cant deficiency in Spain. In addition, the Talgo was tested in 1997 at up to eight inches of cant deficiency in the Pacific Northwest.

Interested parties are invited to participate in these proceedings by submitting written views, data, or comments. FRA does not anticipate scheduling a public hearing in connection with these proceedings since the facts do not appear to warrant a hearing. If any interested party desires an opportunity for oral comment, they should notify FRA, in writing, before the end of the comment period and specify the basis for their request.

All communications concerning these proceedings should identify the appropriate docket number (e.g., Waiver Petition Docket Number H–98–2) and must be submitted in triplicate to the Docket Clerk, Office of Chief Counsel, FRA, Nassif Building, 400 Seventh Street, S.W., Mail Stop 10, Washington, D.C. 20590. Communications received within 30 days of the date of this notice will be considered by FRA before final action is taken. Comments received after that date will be considered as far as practicable. All written communications concerning these proceedings are available for examination during regular business hours (9:00 a.m.—5:00 p.m.) at FRA's temporary docket room located at 1120 Vermont Avenue, N.W., Room 7051, Washington, D.C. 20005.

Issued in Washington, D.C. on September 23, 1998.

Grady C. Cothen, Jr.,

Deputy Associate Administrator for Safety Standards and Program Development.

[FR Doc. 98–25876 Filed 9–25–98; 8:45 am]

BILLING CODE 4910–06–P

DEPARTMENT OF TRANSPORTATION

Surface Transportation Board

[STB Docket No. AB–31 (Sub-No. 33)]

Grand Trunk Western Railroad Incorporated—Abandonment—In Macomb and Oakland Counties, MI

On September 8, 1998, Grand Trunk Western Railroad Incorporated (GTW) filed with the Surface Transportation Board, Washington, DC 20423, an application for permission for the abandonment of a portion of a line of railroad known as the Romeo Subdivision extending from railroad milepost 19.5 near Washington Station

(#55532 at MP 19.9) in Washington, MI, to milepost 37.7 near Pontiac Station (#55610 at MP 25.8 on the Holly Subdivision) in Pontiac, MI, a distance of 18.2 miles, in Macomb and Oakland Counties, MI. The line includes the stations of Washington (#55532 at MP 19.9), Rochester (#55535 at MP 26.3), and Auburn Heights (#55536 at MP 31.7), and traverses United States Postal Service ZIP Codes 48094, 48316, 48307, 48309, 48326, and 48341. Neither Pontiac Station nor the Holly Subdivision is included in the line proposed to be abandoned.

The line does not contain federally granted rights-of-way. Any documentation in the railroad's possession will be made available promptly to those requesting it. The applicant's entire case (case-in-chief) for abandonment was filed with the application.

This line of railroad has appeared on the applicant's system diagram map in category 1 since April 3, 1998.

The interest of railroad employees will be protected by the conditions set forth in *Oregon Short Line R. Co.—Abandonment—Goshen,* 360 I.C.C. 91 (1979).

Any interested person may file with the Surface Transportation Board written comments concerning the proposed abandonment or protests (including the protestant's entire opposition case), by October 23, 1998. All interested persons should be aware that following any abandonment of rail service and salvage of the line, the line may be suitable for other public use, including interim trail use. Any request for a public use condition under 49 U.S.C. 10905 (§ 1152.28 of the Board's rules) and any request for a trail use condition under 16 U.S.C. 1247(d) (§ 1152.29 of the Board's rules) must be filed by October 23, 1998. The due date for applicant's reply to protests and its response to trail use requests is November 9, 1998. Persons who may oppose the abandonment but who do not wish to participate fully in the process by appearing at any oral hearings or by submitting verified statements of witnesses containing detailed evidence should file comments. Persons interested only in seeking public use or trail use conditions should also file comments. Persons opposing the proposed abandonment that do wish to participate actively and fully in the process should file a protest.

In addition, a commenting party or protestant may provide:

(i) An offer of financial assistance, pursuant to 49 U.S.C. 10904 (due 120 days after the application is filed or 10 days after the application is granted by the Board, whichever occurs sooner);

(ii) Recommended provisions for protection of the interests of employees;

(iii) A request for a public use condition under 49 U.S.C. 10905; and

(iv) A statement pertaining to prospective use of the right-of-way for interim trail use and rail banking under 16 U.S.C. 1247(d) and § 1152.29.

Parties seeking information concerning the filing of protests should refer to § 1152.25.

Written comments and protests, including all requests for public use and trail use conditions, must indicate the proceeding designation STB No. AB–31 (Sub-No. 33) and should be filed with the Secretary, Surface Transportation Board, Washington, DC 20423, no later than October 23, 1998. Interested persons may file a written comment or protest with the Board to become a party to this abandonment proceeding. A copy of each written comment or protest shall be served upon the representatives of the applicant, Robert P. vom Eigen and Jamie P. Rennert, Hopkins & Sutter, 888 Sixteenth Street, NW, Washington, DC 20006, Tel: (202) 835–8000. The original and 10 copies of all comments or protests shall be filed with the Board with a certificate of service. Except as otherwise set forth in part 1152, every document filed with the Board must be served on all parties to the abandonment proceeding. 49 CFR 1104.12(a).

The line sought to be abandoned will be available for subsidy or sale for continued rail use, if the Board decides to permit the abandonment, in accordance with applicable laws and regulations (49 U.S.C. 10904 and 49 CFR 1152.27). No subsidy arrangement approved under 49 U.S.C. 10904 shall remain in effect for more than 1 year unless otherwise mutually agreed by the parties (49 U.S.C. 10904(f)(4)(B)). Applicant will promptly provide upon request to each interested party an estimate of the subsidy and minimum purchase price required to keep the line in operation. The carrier's representative to whom inquiries may be made concerning sale or subsidy terms is Yves Lemieux, Director, Business Planning and Network Restructuring, Canadian National Railway Company, P.O. Box 8100, Montreal, Quebec, Canada H3C 3N4, Tel: (514) 399–4231.

Persons seeking further information concerning abandonment procedures may contact the Surface Transportation Board or refer to the full abandonment regulations at 49 CFR part 1152. Questions concerning environmental issues may be directed to the Board's Section of Environmental Analysis.

An environmental assessment (EA) (or environmental impact statement (EIS), if necessary) prepared by the Section of Environmental Analysis will be served upon all parties of record and upon any agencies or other persons who commented during its preparation. Any other persons who would like to obtain a copy of the EA (or EIS) may contact the Section of Environmental Analysis. EAs in abandonment proceedings normally will be made available within 33 days of the filing date of the application. The deadline for submission of comments on the EA will generally be within 30 days of its service. The comments received will be addressed in the Board's decision. A supplemental EA or EIS may be issued where appropriate.

Decided: September 21, 1998.

By the Board, David M. Konschnik, Director, Office of Proceedings.

Vernon A. Williams,

Secretary.

[FR Doc. 98–25898 Filed 9–25–98; 8:45 am]

BILLING CODE 4915–00–M

DEPARTMENT OF THE TREASURY

Office of the General Counsel

Appointment of Members of the Legal Division to the Performance Review Board, Internal Revenue Service

Under the authority granted to me as Chief Counsel of the Internal Revenue Service by the General Counsel of the Department of the Treasury by General Counsel Order No. 21 (Rev. 4), and pursuant to the Civil Service Reform Act, I hereby appoint the following persons to the Legal Division Performance Review Board, Internal Revenue Service Panel:

1. Chairperson, Marlene Gross, Deputy Chief Counsel;
2. Neal Wolin, Deputy General Counsel;
3. Joseph Maselli, Northeast Regional Counsel;
4. Richard J. Mihelcic, Associate Chief Counsel (Finance and Management)
5. Paul Kugler, Assistant Chief Counsel (Passthroughs & Special Industries); and
6. James W. Clark, Pacific Northwest District Counsel.

This publication is required by 5 U.S.C. 4314(c)4).

Stuart L. Brown,

Chief Counsel, Internal Revenue Service.

[FR Doc. 98–25750 Filed 9–25–98; 8:45 am]

BILLING CODE 4830–01–P

DEPARTMENT OF THE TREASURY

Internal Revenue Service

Art Advisory Panel—Notice of Closed Meeting

AGENCY: Internal Revenue Service, Treasury.

ACTION: Notice of closed meeting of art advisory panel.

SUMMARY: Closed meeting of the Art Advisory Panel will be held in Washington, DC.

DATES: The meeting will be held October 21 and 22, 1998.

ADDRESSES: The closed meeting of the Art Advisory Panel will be held on October 21 and 22, 1998 in Room 118 beginning at 9:30 a.m., Aerospace Center Building, 901 D Street, SW, Washington, DC 20024.

FOR FURTHER INFORMATION CONTACT: Karen Carolan, C:AP:AS:4 901 D Street, SW, Washington, DC 20024. Telephone (202) 401–4128, (not a toll free number).

SUPPLEMENTARY INFORMATION:

Notice is hereby given pursuant to section 10(a)(2) of the Federal Advisory Committee Act, 5 U.S.C. App. (1988), that a closed meeting of the Art Advisory Panel will be held on October 21 and 22, 1998 in Room 118 beginning at 9:30 a.m., Aerospace Center Building, 901 D Street, SW, Washington, DC 20024.

The agenda will consist of the review and evaluation of the acceptability of fair market value appraisals of works of art involved in Federal income, estate, or gift tax returns. This will involve the discussion of material in individual tax returns made confidential by the provisions of section 6103 of Title 26 of the United States Code.

A determination as required by section 10(d) of the Federal Advisory Committee Act has been made that this meeting is concerned with matters listed in section 552b(c)(3), (4), (6), and (7) of Title 5 of the United States Code, and that the meeting will not be open to the public.

The Commissioner of Internal Revenue has determined that this document is not a significant regulatory action as defined in Executive Order 12866 and that a regulatory impact analysis therefore is not required. Neither does this document constitute a rule subject to the Regulatory Flexibility Act (5 U.S.C. Chapter 6).

Charles O. Rossotti,

Commissioner of Internal Revenue.

[FR Doc. 98–25885 Filed 9–25–98; 8:45 am]

BILLING CODE 4830–01–P

DEPARTMENT OF VETERANS AFFAIRS

[OMB Control No. 2900–0043]

Proposed Information Collection Activity: Proposed Collection; Comment Request

AGENCY: Veterans Benefits Administration, Department of Veterans Affairs.

ACTION: Notice.

SUMMARY: The Veterans Benefits Administration (VBA), Department of Veterans Affairs (VA), is announcing an opportunity for public comment on the proposed collection of certain information by the agency. Under the Paperwork Reduction Act (PRA) of 1995, Federal agencies are required to publish notice in the **Federal Register** concerning each proposed collection of information, including each proposed reinstatement for a previously approved collection for which approval has expired, and allow 60 days for public comment in response to the notice. This notice solicits comments on the information needed to confirm marital status and dependency of children.

DATES: Written comments and recommendations on the proposed collection of information should be received on or before November 27, 1998.

ADDRESSES: Submit written comments on the collection of information to Nancy J. Kessinger, Veterans Benefits Administration (20S52), Department of Veterans Affairs, 810 Vermont Avenue, NW, Washington, DC 20420. Please refer to ''OMB Control No. 2900–0043'' in any correspondence.

FOR FURTHER INFORMATION CONTACT: Nancy J. Kessinger at (202) 273–7079 or FAX (202) 275–5947.

SUPPLEMENTARY INFORMATION: Under the PRA of 1995 (Public Law 104–13; 44 U.S.C., 3501–3520), Federal agencies must obtain approval from the Office of Management and Budget (OMB) for each collection of information they conduct or sponsor. This request for comment is being made pursuant to Section 3506(c)(2)(A) of the PRA.

With respect to the following collection of information, VBA invites comments on: (1) whether the proposed collection of information is necessary for the proper performance of VBA's functions, including whether the information will have practical utility; (2) the accuracy of VBA's estimate of the burden of the proposed collection of information; (3) ways to enhance the quality, utility, and clarity of the information to be collected; and (4) ways to minimize the burden of the collection of information on respondents, including through the use of automated collection techniques or the use of other forms of information technology.

Title: Declaration of Status of Dependents, VA Form 21–686c.

OMB Control Number: 2900–0043.

Type of Review: Reinstatement, without change, for a previously approved collection for which approval has expired.

Abstract: The form is used to obtain the necessary information to confirm marital status and existence of any dependent child(ren). The information is used by VA to determine eligibility to benefits.

Affected Public: Individuals or households.

Estimated Annual Burden: 56,500 hours.

Estimated Average Burden Per Respondent: 15 minutes.

Frequency of Response: On occasion.

Estimated Number of Respondents: 226,000.

Dated: August 24, 1998.

By direction of the Secretary.

Donald L. Neilson,

Director, Information Management Service.

[FR Doc. 98–25810 Filed 9–25–98; 8:45 am]

BILLING CODE 8320–01–P

Corrections

Federal Register

Vol. 63, No. 187

Monday, September 28, 1998

This section of the FEDERAL REGISTER contains editorial corrections of previously published Presidential, Rule, Proposed Rule, and Notice documents. These corrections are prepared by the Office of the Federal Register. Agency prepared corrections are issued as signed documents and appear in the appropriate document categories elsewhere in the issue.

DEPARTMENT OF TRANSPORTATION

Federal Railroad Administration

49 CFR Part 213

[Docket No. RST-90-1, Notice No. 8]

RIN 2130-AA75

Track Safety Standards

Correction

In rule document 98–15932 beginning on page 33992 in the issue of Monday, June 22, 1998, make the following corrections:

§ 213.113 [Corrected]

§ 213.337 [Corrected]

On pages 34035 and 34048, in §§ 213.113(a)(2) and 213.337(a)(2), the table is corrected as set forth below:

BILLING CODE 1505-01-D

REMEDIAL ACTION

Defect	Length of defect (inch)		Percent of rail head cross-sectional area weakened by defect		If defective rail is not replaced, take the remedial action prescribed in note
	More than	But not more than	Less than	But not less than	
Transverse fissure			70 100	5 70 100	B. A2. A.
Compound fissure			70 100	5 70 100	B. A2. A.
Detail fracture Engine burn fracture Defective weld			25 80 100	5 25 80 100	C. D. [A2] or[E and H]. [A] or [E and H].
Horizontal split head Vertical split head Split web Piped rail Head web separation	1 2 4 (1)	2 4 ..... (1)	.... (1)	....	H and F. I and G. B. A.
Bolt hole crack	½ 1 1½ (1)	1 1½ ..... (1)	.... (1)	....	H and F. H and G. B. A.
Broken base	1 6	6	....	....	D. [A] or [E and I].
Ordinary break	.....	.....	.....	.....	A or E.
Damaged rail	.....	.....	.....	.....	D.
Flattened rail	Depth > ⅜ and Length ≥ 8	.....	.....	.....	H.

(1) Break out in rail head.

BILLING CODE 1505-01-C

federal register

Monday
September 28, 1998

Part II

Department of Defense

General Services Administration

National Aeronautics and Space Administration

48 CFR Parts 1, et al.

Federal Acquisition Regulation; Foreign Acquisition (Part 25 Rewrite); Proposed Rule

DEPARTMENT OF DEFENSE

GENERAL SERVICES ADMINISTRATION

NATIONAL AERONAUTICS AND SPACE ADMINISTRATION

48 CFR Parts 1, 5, 6, 9, 12, 13, 14, 15, 17, 25, and 52

[FAR Case 97–024]

RIN 9000–AH30

Federal Acquisition Regulation; Foreign Acquisition (Part 25 Rewrite)

AGENCIES: Department of Defense (DOD), General Services Administration (GSA), and National Aeronautics and Space Administration (NASA).

ACTION: Proposed rule.

SUMMARY: The Civilian Agency Acquisition Council and the Defense Acquisition Regulations Council are proposing to amend the Federal Acquisition Regulation (FAR) to rewrite guidance and clauses on foreign acquisition. This regulatory action was not subject to Office of Management and Budget review under Executive Order 12866, dated September 30, 1993. This is not a major rule under 5 U.S.C. 804.

DATES: Comments should be submitted on or before November 27, 1998 to be considered in the formulation of a final rule.

ADDRESSES: Interested parties should submit written comments to: General Services Administration, FAR Secretariat (MVRS), Attn: Ms. Laurie Durate, 1800 F Street, NW, Room 4035, Washington, DC 20405, E-mail comments submitted over Internet should be addressed to: farcase.97–024@gsa.gov.

Please cite FAR case 97–024 in all correspondence related to this case.

FOR FURTHER INFORMATION CONTACT: The FAR Secretariat, Room 4035, GS Building, Washington, DC 20405 (202) 501–4755 for information pertaining to status or publication schedules. For clarification of content, contact Mr. Paul Linfield, Procurement Analyst, at (202) 501–1757. Please cite FAR case 97–024.

SUPPLEMENTARY INFORMATION:

A. Background

This rule constitutes a rewrite of FAR Part 25 and the associated clauses in Part 52. Part 25 implements a number of statutes and executive orders that use different terminology that have specific definitions. These statutes and executive orders provide different exceptions and may exempt certain departments or agencies. The effort to rewrite FAR Part 25 was undertaken to make the various policies and procedures that implement these statutes and executive orders in acquisitions of foreign supplies, services, and construction materials clearer and more understandable to the reader. In addition to numerous editorial changes, some policies and procedures were clarified to eliminate potential conflict or inconsistency with other parts of the FAR. Several changes were made to provide either new or more consistent and uniform direction to agencies. One of the more significant of these changes, discussed below, addresses the treatment of U.S. made end products for acquisitions subject to the Trade Agreements Act.

To qualify as a domestic end product under the Buy American Act, the end product must be manufactured in the United States and the cost of the components manufactured in the United States must exceed 50% of the cost of all components. Under the Trade Agreements Act, the country of origin of an end product that is not wholly the growth, product or manufacture of a country, is the country in which the end product is substantially transformed into a new and different article, without regard to the source of the components. The proposed rule defines U.S. made end products as products that are manufactured or substantially transformed in the United States, regardless of the source of the components. Therefore, U.S. made end products pass the Trade Agreements Act country of origin test, but do not necessarily qualify as domestic end products under the Buy American Act.

The Trade Agreements Act prohibits the purchase of foreign end products, except for the products of countries that are eligible under the Trade Agreements Act, the North American Free Trade Agreement, the Caribbean Basin Economic Recovery Initiative, or some other agreement. These eligible products compete on an equal basis with domestic end products, without application of a Buy American Act or Balance of Payments Program evaluation factor.

The Trade Agreements Act does not specifically address the treatment of U.S. made end products that do not qualify as domestic end products under the Buy American Act. Because these other U.S. made end products are foreign end products under the Buy American Act and are not the products of an eligible country, the current FAR prohibits a contractor from supplying these other U.S. made end products when the Trade Agreements Act applies.

In 1990, the GSBCA Board of Contract Appeals ruled that the Trade Agreements Act does not prohibit the purchase of U.S. products. See *International Business Machines Corp.*, GSBCA No. 10532–P, May 18, 1990, 90–2 BCA. U.S. made end products that do not meet the definition of domestic end product under the Buy American Act are not foreign end products included in the Trade Agreements Act procurement prohibition. Until now, the GSBCA decision has been separately implemented by each agency. This proposed rule revises the FAR to permit the purchase of all U.S. made end products, whether or not they are domestic end products. All such products compete equally with eligible end products. Agencies that previously needed to deviate from the FAR to conform their acquisitions to the GSBCA decision will no longer need a deviation, since that decision is implemented in the proposed rule.

However, the Board did not rule on the application of the Buy American Act when a U.S. made end product that is not a domestic end product competes with a domestic end product. As a result, an agency may handle this evaluation differently. As a matter of policy, agencies generally apply the Balance of Payments Program to overseas acquisitions in the same way they apply the Buy American Act to acquisitions in the United States. For example, GSA and the Department of Commerce do not apply the Buy American Act or Balance of Payments Program to provide a preference for domestic end products over other U.S. made end products that do not qualify as domestic end products when the Trade Agreements Act applies, *i.e.*, all U.S. made end products are treated the same. On the other hand, unless a waiver of the Buy American Act has been specifically granted, DoD does provide an evaluation preference to domestic end products, when such products are competing with other U.S. made end products that do not qualify as domestic end products. DoD has waived application of the Buy American Act/Balance of Payments Program for all U.S. made information technology end products, when the Trade Agreements Act applies.

The evaluation procedures at FAR 25.502(b)(2) are appropriate for those agencies that provide the same treatment to all U.S. made end products. The proposed rule does not require a determination as to whether a U.S. made end product is domestic through an assessment of the source and value

of the components. Agencies, such as DoD, that in some cases apply the Buy American Act or Balance of Payments Program evaluation preference to domestic end products in competition with other U.S. made end products in acquisitions subject to the Trade Agreements Act, may provide alternative evaluation procedures in agency FAR supplements.

Numerous structural and editorial changes are proposed. Revisions include—(1) adding an overview to help readers understand the part (25.001, General); (2) adding 25.002, Applicability of subparts; (3) adding definitions of ''cost of components,'' ''eligible offer,'' ''noneligible product,'' ''Israeli end product,'' ''nondesignated country end product,'' and ''U.S. made end product;'' eliminating unnecessary definitions; and relocating all definitions to 25.003; and (4) adding text and examples for evaluating offers under the Buy American Act and trade agreements for supply contracts.

In this proposed rule, the clauses prescribed in Part 25 have been renumbered, revised, and sometimes both. In order to better understand the revisions to Part 52, the following list is provided:

Current FAR section	New FAR section
52.225–1 and –6	52.225–2
52.225–2	52.225–7
52.225–3 and –7	52.225–1
52.225–4	52.225–17
52.225–5	52.225–9
52.225–8	52.225–6
52.225–9	52.225–5
52.225–10	52.225–8
52.225–11	52.225–13
52.225–12	52.225–10
52.225–13	52.225–12
52.225–14	52.225–14
52.225–15 and –22	52.225–11
52.225–18	52.225–15
52.225–19	52.225–16
52.225–20	52.225–4
52.225–21	52.225–3

B. Regulatory Flexibility Act

This proposed rule is not expected to have a significant economic impact on a substantial number of small entities within the meaning of the Regulatory Flexibility Act, 5 U.S.C. 601, *et seq.*, because it primarily clarifies existing guidance pertaining to acquisition of foreign supplies, services, and construction. An Initial Regulatory Flexibility Analysis has, therefore, not been performed. Comments are invited from small businesses and other interested parties. Comments from small entities concerning the affected FAR subpart will be considered in accordance with 5 U.S.C. 610 of the Act. Such comments must be submitted separately and should cite 5 U.S.C. 601, *et seq.* (FAR case 97–024), in correspondence.

C. Paperwork Reduction Act

The Paperwork Reduction Act (44 U.S.C. 3501, *et seq.*) is deemed to apply because the proposed rule contains information collection requirements. These information collection requirements were submitted and cleared by the Office of Management and Budget (OMB) under 44 U.S.C. 3501, *et seq.* The OMB control numbers are 9000–0022, 9000–0023, 9000–0024, 9000–0025, 9000–0130, and 9000–0141.

The existing provisions at 52.225–1, Buy American Certificate, and 52.225–6, Balance of Payments Program Certificate (OMB Control Numbers 9000–0024 and 9000–0023, respectively), are now combined into a new provision at 52.225–2, Buy American Act—Balance of Payments Program Certificate, with no change in paperwork burden. The existing provision at 52.225–8, Buy American Act—Trade Agreements—Balance of Payments Program Certificate (OMB Control Number 9000–0025) is replaced by the provision at 52.225–6, Trade Agreements Certificate. The existing provision at 52.225–20, Buy American Act—North American Free Trade Agreement Implementation Act—Balance of Payments Program Certificate (OMB Control Number 9000–0130) is replaced by the provision at 52.225–4, Buy American Act—North American Free Trade Agreement—Israeli Trade Act—Balance of Payments Program Certificate. These replacement provisions eliminate redundancies in required listing of foreign end products and country of origin. The provisions and clauses at 52.225–5, Buy American Act—Construction Materials; 52.225–15, Buy American Act—Construction Materials under Trade Agreements Act and North American Free Trade Agreement; 52.225–12, Notice of Buy American Act Requirement—Construction Materials; 52.225–13, Notice of Buy American Act Requirement—Construction Materials under Trade Agreements Act and North American Free Trade Agreement (OMB Clearance 9000–0141); and 52.225–22, Balance of Payments Program—Construction Materials—NAFTA, are replaced by the provisions and clauses at 52.225–9, Buy American Act—Balance of Payments Program—Construction Materials; 52.225–10, Notice of Buy American Act/Balance of Payments Program Requirement—Construction Materials; 52.225–11, Buy American Act—Balance of Payments Program—Construction Materials under Trade Agreements; and 52.225–12, Notice of Buy American Act/Balance of Payments Program Requirement—Construction Materials under Trade Agreements. There is no change in burden relating to the renumbered clause at 52.225–8 entitled ''Duty-Free Entry,'' currently 52.225–10 (OMB Clearance 9000–0022).

List of Subjects in 48 CFR Parts 1, 5, 6, 9, 12, 13, 14, 15, 17, 25, and 52

Government procurement.

Dated: September 18, 1998.

Edward C. Loeb,

Director, Federal Acquisition Policy Division.

Therefore, it is proposed that 48 CFR Parts 1, 5, 6, 9, 12, 13, 14, 15, 17, 25, and 52 be amended as set forth below:

1. The authority citation for 48 CFR Parts 1, 5, 6, 9, 12, 13, 14, 15, 17, 25, and 52 continues to read as follows:

Authority: 40 U.S.C. 486(c); 10 U.S.C. chapter 137; and 42 U.S.C. 2473(c).

PART 1—FEDERAL ACQUISITION REGULATIONS SYSTEM

2. Section 1.106 is amended in the table following the introductory paragraph by removing the FAR Segment and OMB Control number in the left columns and inserting the FAR Segment and OMB Control Number listed in the right columns as follows:

Remove		Insert	
FAR segment	OMB control No.	FAR segment	OMB control No.
52.225–1	9000–0024	52.225–2	9000–0023 and 9000–0024
52.225–6	9000–0023	52.225–4	9000–0130
52.225–8	9000–0025	52.225–6	9000–0025
52.225–10	9000–0022	52.225–8	9000–0022
52.225–20	9000–0130	52.225–9	9000–0141
		52.225–11	9000–0141

PART 5—PUBLICIZING CONTRACT ACTIONS

5.301 [Amended]

3. Section 5.301 is amended in the parenthetical in paragraph (a)(1) by removing ''(see 25.402 and 25.403)'' and inserting ''(see subpart 25.4)''.

PART 6—COMPETITION REQUIREMENTS

4. Section 6.303–1 is amended by revising the first sentence of paragraph (d) to read as follows:

6.303–1 Requirements.

* * * * *

(d) Contract actions subject to the Trade Agreements Act (see subpart 25.4) may be made without providing for full and open competition only when permitted and justified pursuant to this subpart. * * *

* * * * *

PART 9—CONTRACTOR QUALIFICATIONS

5. Section 9.205 is amended by revising paragraph (b) to read as follows:

9.205 Opportunity for qualification before award.

* * * * *

(b) The activity responsible for establishing a qualification requirement shall keep any list maintained of those already qualified open for inclusion of additional products, manufacturer, or other potential sources, including eligible products from designated countries under the terms of the Trade Agreements Act (see subpart 25.4).

PART 12—ACQUISITION OF COMMERCIAL ITEMS

6. Section 12.205 is amended by revising paragraph (c) to read as follows:

12.205 Offers.

* * * * *

(c) Consistent with the requirements at 5.203(b), the contracting officer may allow fewer than 30 days response time for receipt of offers for commercial items, unless the acquisition is subject to NAFTA or the Trade Agreements Act(see 5.203(h)).

12.504 [Amended]

7. Section 12.504 is amended by removing paragraphs (a)(2) through (a)(4) and redesignating (a)(5) through (a)(15) as (a)(2) through (a)(12), respectively.

PART 13—SIMPLIFIED ACQUISITION PROCEDURES

13.101 [Amended]

8. Section 13.101 is amended by removing paragraph (a)(3) and redesignating (a)(4) as (a)(3).

PART 14—SEALED BIDDING

9. Section 14.201–6 is amended by revising paragraphs (x) and (y) to read as follows:

14.201–6 Solicitation provisions.

* * * * *

(x) The provision at 52.214–34, Submission of Offers in the English Language, is required in solicitations that include any of the clauses prescribed in 25.1101 or 25.1102. It may be included in other solicitations when the contracting officer decides that it is necessary.

(y) The provision at 52.214–35, Submission of Offers in U.S. Currency, is required in solicitations that include any of the clauses prescribed in 25.1101 or 25.1102, unless the clause at 52.225–17, Evaluation of Foreign Currency Offers, prescribed in 25.1103(d) is included. It may be included in other solicitations when the contracting officer decides that it is necessary.

14.409–1 [Amended]

10. Section 14.409–1 is amended in paragraph (a)(2) by removing the reference ''25.405(e)'' and inserting ''25.408(a)(5)''.

PART 15—CONTRACTING BY NEGOTIATION

15.209 [Amended]

11. Section 15.209 is amended by removing the reference ''25.901'' and inserting ''25.1001'' in paragraph (b)(4).

PART 17—SPECIAL CONTRACTING METHODS

12. Section 17.203 is amended by revising paragraph (h) to read as follows:

17.203 Solicitations.

* * * * *

(h) Include the value of options in determining if the acquisition will exceed the Trade Agreements Act and North American Free Trade Agreement thresholds.

13. Part 25 is revised to read as follows:

PART 25—FOREIGN ACQUISITION

25.000 Scope of part.
25.001 General.
25.002 Applicability of subparts.
25.003 Definitions.

Subpart 25.1—Buy American Act—Supplies

25.100 Scope of subpart.
25.101 General.
25.102 Policy.
25.103 Exceptions.
25.104 Nonavailable articles.
25.105 Determining reasonableness of cost.

Subpart 25.2—Buy American Act—Construction Materials

25.200 Scope of subpart.
25.201 Policy.
25.202 Exceptions.
25.203 Preaward determinations.
25.204 Evaluating offers of foreign construction material.
25.205 Postaward determinations.
25.206 Noncompliance.

Subpart 25.3—Balance of Payments Program

25.300 Scope of subpart.
25.301 General.
25.302 Policy.
25.303 Exceptions.
25.304 Procedures.

Subpart 25.4—Trade Agreements

25.400 Scope of subpart.
25.401 Exceptions.
25.402 General.
25.403 Trade Agreements Act.
25.404 Caribbean Basin Trade Initiative.
25.405 North American Free Trade Agreement (NAFTA).
25.406 Israeli Trade Act.
25.407 Agreement on Trade in Civil Aircraft.
25.408 Procedures.

Subpart 25.5—Evaluating Foreign Offers—Supply Contracts

25.501 General.
25.502 Application.
25.503 Group offers.
25.504 Evaluation examples.
25.504–1 Buy American Act/Balance of Payments Program.
25.504–2 Trade Agreements Act/Caribbean Basin Trade Initiative/NAFTA.
25.504–3 Other trade agreements.
25.504–4 Group award basis.

Subpart 25.6—Trade Sanctions

25.600 Scope of subpart.
25.601 Policy.
25.602 Exceptions.

Subpart 25.7—Prohibited Sources

25.701 Restrictions.
25.702 Source of further information.

Subpart 25.8—Other International Agreements and Coordination

25.801 General.
25.802 Procedures.

Subpart 25.9—Customs and Duties

25.900 Scope of subpart.
25.901 Policy.
25.902 Procedures.
25.903 Exempted supplies.

Subpart 25.10—Additional Foreign Acquisition Regulations

25.1001 Waiver of right to examination of records.
25.1002 Use of foreign currency.

Subpart 25.11—Solicitation Provisions and Contract Clauses

25.1101 Acquisition of supplies.
25.1102 Acquisition of construction.
25.1103 Other provisions and clauses.

Authority: 40 U.S.C. 486(c); 10 U.S.C. chapter 137; and 42 U.S.C. 2473(c).

PART 25—FOREIGN ACQUISITION

25.000 Scope of part.

This part provides policies and procedures for acquiring foreign supplies, services, and construction materials. It implements the Buy American Act, the Balance of Payments Program, trade agreements, and other laws and regulations.

25.001 General.

(a) The Buy American Act—

(1) Restricts the purchase of supplies, that are not domestic end products, for use within the United States. A foreign end product may be purchased if it is determined that the price of the lowest domestic offer is unreasonable, or if another exception applies (see subpart 25.1); and

(2) Requires that, with some exceptions, only domestic construction materials be used in contracts for construction in the United States (see subpart 25.2).

(b) The Balance of Payments Program (see subpart 25.3) is similar to the Buy American Act in its implementation except that it applies to the purchase of supplies for use outside the United States, and construction materials for construction contracts performed outside the United States.

(c) The restrictions in the Buy American Act and the Balance of Payments Program are waived in acquisitions subject to certain trade agreements (see subpart 25.4). In these acquisitions, end products and construction materials from certain countries receive nondiscriminatory treatment in evaluation with domestic offers. Generally, the dollar value of the acquisition will determine which of the trade agreements applies. Exceptions to the applicability of the trade agreements are described in subpart 25.4.

(d) The test used to determine the country of origin for an end product under the trade agreements is different from the test used to determine the country of origin for an end product under the Buy American Act (see definitions of ''end product'' in 25.003). The Buy American Act uses a two-part test to define a ''domestic end product'' (manufacture in the United States and a formula based on cost of domestic components). Under the trade agreements, the test to determine country of origin is ''substantial transformation,'' *i.e.*, transforming an article into a new and different article of commerce, with a name, character, or use distinct from the original article.

(e) Sanctions have been imposed against some European Union countries for discriminating against U.S. products and services (see subpart 25.6).

25.002 Applicability of subparts.

The applicability of the subparts is shown in the following table. Comprehensive procedures for offer evaluation, and examples, are provided in subpart 25.5.

Subpart	Supplies for use		Construction		Services performed	
	Inside U.S.	Outside U.S.	Inside U.S.	Outside U.S.	Inside U.S.	Outside U.S.
25.1 Buy American Act—Supplies	X					
25.2 Buy American Act—Construction Materials			X			
25.3 Balance of Payments Program		X		X		
25.4 Trade Agreements	X	X	X	X	X	X
25.5 Evaluating Foreign Offers—Supply Contracts	X	X				
25.6 Trade Sanctions	X	X	X	X	X	X
25.7 Prohibited Sources	X	X	X	X	X	X
25.8 Other International Agreements and Coordination	X	X		X		X
25.9 Customs and Duties	X					
25.10 Additional Foreign Acquisition Regulations	X	X	X	X	X	X
25.11 Solicitation Provisions and Contract Clauses	X	X	X	X	X	X

25.003 Definitions.

As used in this part—

Canadian end product means an article that—

(1) Is wholly the growth, product, or manufacture of Canada; or

(2) In the case of an article that consists in whole or in part of materials from another country, has been substantially transformed in Canada into a new and different article of commerce with a name, character, or use distinct from that of the article or articles from which it was transformed. The term refers to a product offered for purchase under a supply contract, but for purposes of calculating the value of the end product includes services (except transportation services) incidental to the article, provided that the value of those incidental services does not exceed that of the article itself.

Caribbean Basin country means any of the following countries: Antigua and Barbuda, Aruba, Bahamas, Barbados, Belize, British Virgin Islands, Costa Rica, Dominica, Dominican Republic, El Salvador, Grenada, Guatemala, Guyana, Haiti, Honduras, Jamaica, Montserrat, Netherlands Antilles, Nicaragua, Panama, St. Kitts and Nevis, St. Lucia, St. Vincent and the Grenadines, Tobago and Trinidad.

Caribbean Basin country end product means an article that—

(1) Is wholly the growth, product, or manufacture of a Caribbean Basin country; or

(2) In the case of an article that consists in whole or in part of materials from another country, has been substantially transformed in a Caribbean Basin country into a new and different article of commerce with a name, character, or use distinct from that of

the article or articles from which it was transformed. The term refers to a product offered for purchase under a supply contract, but for purposes of calculating the value of the end product includes services (except transportation services) incidental to the article; *provided* that the value of those incidental services does not exceed that of the article itself. The term excludes products that are excluded from duty-free treatment for Caribbean countries under 19 U.S.C. 2703(b), which presently are—

(i) Textiles and apparel articles that are subject to textile agreements;

(ii) Footwear, handbags, luggage, flat goods, work gloves, and leather wearing apparel not designated as eligible articles for the purpose of the Generalized System of Preferences under Title V of the Trade Act of 1974;

(iii) Tuna, prepared or preserved in any manner in airtight containers;

(iv) Petroleum, or any product derived from petroleum; and

(v) Watches and watch parts (including cases, bracelets, and straps) of whatever type including, but not limited to, mechanical, quartz digital, or quartz analog, if such watches or watch parts contain any material that is the product of any country to which the Harmonized Tariff Schedule of the United States (HTSUS) column 2 rates of duty apply.

Civil aircraft and related articles means—

(1) All aircraft other than aircraft to be purchased for use by the Department of Defense or the U.S. Coast Guard;

(2) The engines (and parts and components for incorporation into the engines) of these aircraft;

(3) Any other parts, components, and subassemblies for incorporation into the aircraft; and

(4) Any ground flight simulators, and parts and components of these simulators, for use with respect to the aircraft, whether to be used as original or replacement equipment in the manufacture, repair, maintenance, rebuilding, modification, or conversion of the aircraft and without regard to whether the aircraft or articles receive duty-free treatment under section 601(a)(2) of the Trade Agreements Act.

Components means those articles, materials, and supplies incorporated directly into the end products.

Construction means construction, alteration, or repair of any public building or public work.

Construction material means an article, material, or supply brought to the construction site by a contractor or subcontractor for incorporation into the building or work. The term also includes an item brought to the site preassembled from articles, materials, or supplies. However, emergency life safety systems, such as emergency lighting, fire alarm, and audio evacuation systems, that are discrete systems incorporated into a public building or work and that are produced as complete systems, shall be evaluated as a single and distinct construction material regardless of when or how the individual parts or components of such systems are delivered to the construction site. Materials purchased directly by the Government are supplies, not construction material.

Cost of components means—

(1) For components purchased by the contractor, the acquisition cost, including transportation costs to the place of incorporation into the end product (whether or not such costs are paid to a domestic firm), and any applicable duty (whether or not a duty-free entry certificate is issued); or

(2) For components manufactured by the contractor, all costs associated with the manufacture of the component, including transportation costs as described in paragraph (1) of this definition, plus allocable overhead costs, but excluding profit. Cost of components does not include any costs associated with the manufacture of the end product.

Customs territory of the United States means the States, the District of Columbia, and Puerto Rico.

Designated country means any of the following countries:

Aruba
Austria
Bangladesh
Belgium
Benin
Bhutan
Botswana
Burkina Faso
Burundi
Canada
Cape Verde
Central African Republic
Chad
Comoros
Denmark
Djibouti
Equatorial Guinea
Finland
France
Gambia
Germany
Greece
Guinea
Guinea-Bissau
Haiti
Hong Kong
Ireland
Israel
Italy
Japan
Kiribati
Korea, Republic of Lesotho
Liechtenstein
Luxembourg
Malawi
Maldives
Mali
Mozambique
Nepal
Netherlands
Niger
Norway
Portugal
Rwanda
Sao Tome and Principe
Sierra Leone
Singapore
Somalia
Spain
Sweden
Switzerland
Tanzania U.R.
Togo
Tuvalu
Uganda
United Kingdom
Vanuatu
Western Samoa
Yemen

Designated country end product means an article that—

(1) Is wholly the growth, product, or manufacture of a designated country; or

(2) In the case of an article that consists in whole or in part of materials from another country, has been substantially transformed in a designated country into a new and different article of commerce with a name, character, or use distinct from that of the article or articles from which it was transformed. The term refers to a product offered for purchase under a supply contract, but for purposes of calculating the value of the end product includes services (except transportation services) incidental to the article; *provided* that the value of those incidental services does not exceed that of the article itself.

Domestic construction material means—

(1) An unmanufactured construction material mined or produced in the United States; or

(2) A construction material manufactured in the United States, if the cost of its components mined, produced, or manufactured in the United States exceeds 50 percent of the cost of all its components. Components of foreign origin of the same class or kind for which nonavailability determinations have been made are treated as domestic.

Domestic end product means—

(1) An unmanufactured end product mined or produced in the United States; or

(2) An end product manufactured in the United States, if the cost of its components mined, produced, or

manufactured in the United States exceeds 50 percent of the cost of all its components. Components of foreign origin of the same class or kind as those that the agency determines are not mined, produced, or manufactured in sufficient and reasonably available commercial quantities of a satisfactory quality are treated as domestic. Scrap generated, collected, and prepared for processing in the United States is considered domestic.

Domestic offer means an offer of a domestic end product. When the solicitation specifies that award will be made on a group of line items, a domestic offer means an offer where the proposed price of the domestic end products exceeds 50 percent of the total proposed price of the group.

Eligible offer means an offer of an eligible product. When the solicitation specifies that award will be made on a group of line items, an eligible offer means a foreign offer where the combined proposed price of the eligible products and the domestic end products exceeds 50 percent of the total proposed price of the group.

Eligible product means a foreign end product that is not subject to the discriminatory treatment of the Buy American Act or the Balance of Payments Program due to the applicability of a trade agreement to a particular acquisition.

End product means those articles, materials, and supplies to be acquired under the contract for public use.

Foreign construction material means a construction material other than a domestic construction material.

Foreign contractor means a contractor or subcontractor organized or existing under the laws of a country other than the United States, its territories, or possessions.

Foreign end product means an end product other than a domestic end product.

Foreign offer means any offer other than a domestic offer.

Israeli end product means an article that—

(1) Is wholly the growth, product, or manufacture of Israel; or

(2) In the case of an article that consists in whole or in part of materials from another country, has been substantially transformed in Israel into a new and different article of commerce with a name, character, or use distinct from that of the article or articles from which it was transformed.

Mexican end product means an article that—

(1) Is wholly the growth, product, or manufacture of Mexico; or

(2) In the case of an article that consists in whole or in part of materials from another country, has been substantially transformed in Mexico into a new and different article of commerce with a name, character, or use distinct from that of the article or articles from which it was transformed. The term refers to a product offered for purchase under a supply contract, but for purposes of calculating the value of the end product includes services (except transportation services) incidental to the article; *provided* that the value of those incidental services does not exceed that of the article itself.

Noneligible product means a foreign end product that is not an eligible product.

North American Free Trade Agreement (NAFTA) country means Canada or Mexico.

NAFTA country end product means an article that—

(1) Is wholly the growth, product, or manufacture of a NAFTA country; or

(2) In the case of an article that consists in whole or in part of materials from another country, has been substantially transformed in a NAFTA country into a new and different article of commerce with a name, character, or use distinct from that of the article or articles from which it was transformed. The term refers to a product offered for purchase under a supply contract, but for purposes of calculating the value of the end product includes services (except transportation services) incidental to the article; *provided* that the value of those incidental services does not exceed that of the article itself.

Sanctioned European Union (EU) country construction means construction to be performed in a sanctioned EU member state.

Sanctioned EU country end product means an article that—

(1) Is wholly the growth, product, or manufacture of a sanctioned EU member state; or

(2) In the case of an article that consists in whole or in part of materials from another country, has been substantially transformed in a sanctioned EU member state into a new and different article of commerce with a name, character, or use distinct from that of the article or articles from which it was transformed. The term refers to a product offered for purchase under a supply contract, but for purposes of calculating the value of the end product includes services (except transportation services) incidental to the article; *provided* that the value of those incidental services does not exceed that of the article itself.

Sanctioned EU country services means services to be performed in a sanctioned EU member state.

Sanctioned EU member state means Austria, Belgium, Denmark, Finland, France, Ireland, Italy, Luxembourg, the Netherlands, Sweden, or the United Kingdom.

United States means the 50 states and the District of Columbia, its possessions, the Commonwealth of Puerto Rico, and any other place subject to its jurisdiction, but does not include leased bases or trust territories.

U.S. made end product means an article that has been manufactured in the United States or that has been substantially transformed in the United States into a new and different article of commerce with a name, character, or use distinct from that of the article or articles from which it was transformed.

Subpart 25.1—Buy American Act—Supplies

25.100 Scope of subpart.

This subpart implements the Buy American Act (41 U.S.C. 10a–10d) and Executive Order 10582, December 17, 1954 (as amended). It applies to supplies acquired for use in the United States, including supplies acquired under contracts set aside for small business concerns, if—

(a) The supply contract exceeds the micro-purchase threshold; or

(b) The supply portion of a contract for services that involves the furnishing of supplies (*e.g.*, lease) exceeds the micro-purchase threshold.

25.101 General.

(a) The Buy American Act restricts the purchase of supplies that are not domestic end products. For manufactured end products, the Buy American Act uses a two-part test to define a domestic end product—

(1) The article must be manufactured in the United States; and

(2) The cost of domestic components must exceed 50 percent of the cost of all the components.

(b) The Buy American Act applies to small business set-asides. The product of a small business concern (see subpart 19.5) is a U.S. made end product, but is not a domestic end product unless it meets the component test in paragraph (a)(2) of this section.

(c) Exceptions that allow the purchase of a foreign end product are listed at 25.103. The unreasonable cost exception is implemented through the use of an evaluation factor applied to low foreign offers that are not eligible offers (see 25.003). The evaluation factor is not used to provide a preference for one

foreign offer over another. Evaluation procedures and examples are provided in subpart 25.5.

25.102 Policy.

Except as provided in section 25.103, only domestic end products shall be acquired for public use inside the United States.

25.103 Exceptions.

When one of the following exceptions applies, a foreign end product may be acquired without regard to the restrictions of the Buy American Act:

(a) *Public interest.* The head of the agency may make a determination that domestic preference would be inconsistent with the public interest. This exception applies when an agency has an agreement with a foreign government that provides a blanket exception to the Buy American Act.

(b) *Nonavailability.* A determination may be made that an article, material, or supply is not mined, produced, or manufactured in the United States in sufficient and reasonably available commercial quantities of a satisfactory quality.

(1) A nonavailability determination has been made for the articles listed in 25.104.

(2)(i) Unless agency regulation prescribes otherwise, a nonavailability determination may be made by the head of the contracting activity under any circumstances, or by the contracting officer if all of the following conditions are present:

(A) The acquisition was conducted through use of full and open competition.

(B) The acquisition was synopsized in accordance with 5.201.

(C) No offer for a domestic end product was received.

(ii) A copy of each determination and supporting documentation shall be submitted to the appropriate council identified in 1.201–1 in accordance with agency procedures, for possible addition to the list in 25.104.

(c) *Unreasonable cost.* A decision may be made that the cost of an end product from a domestic source would be unreasonable, in accordance with 25.105 and subpart 25.5.

(d) *Resale.* Foreign end products may be purchased specifically for commissary resale.

25.104 Nonavailable articles.

(a) The following articles have been determined to be nonavailable in accordance with 25.103(b):

Acetylene, black.
Agar, bulk.
Anise.
Antimony, as metal or oxide.
Asbestos, amosite, chrysotile, and crocidolite.
Bananas.
Bauxite.
Beef, corned, canned.
Beef extract.
Bephenium hydroxynapthoate.
Bismuth.
Books, trade, text, technical, or scientific; newspapers; pamphlets; magazines; periodicals; printed briefs and films; not printed in the United States and for which domestic editions are not available.
Brazil nuts, unroasted.
Cadmium, ores and flue dust.
Calcium cyanamide.
Capers.
Cashew nuts.
Castor beans and castor oil.
Chalk, English.
Chestnuts.
Chicle.
Chrome ore or chromite.
Cinchona bark.
Cobalt, in cathodes, rondelles, or other primary ore and metal forms.
Cocoa beans.
Coconut and coconut meat, unsweetened, in shredded, desiccated, or similarly prepared form.
Coffee, raw or green bean.
Colchicine alkaloid, raw.
Copra.
Cork, wood or bark and waste.
Cover glass, microscope slide.
Crane rail (85-pound per foot).
Cryolite, natural.
Dammar gum.
Diamonds, industrial, stones and abrasives.
Emetine, bulk.
Ergot, crude.
Erythrityl tetranitrate.
Fair linen, altar.
Fibers of the following types: abaca, abace, agave, coir, flax, jute, jute burlaps, palmyra, and sisal.
Goat and kidskins.
Graphite, natural, crystalline, crucible grade.
Hand file sets (Swiss pattern).
Handsewing needles.
Hemp yarn.
Hog bristles for brushes.
Hyoscine, bulk.
Ipecac, root.
Iodine, crude.
Kaurigum.
Lac.
Leather, sheepskin, hair type.
Lavender oil.
Manganese.
Menthol, natural bulk.
Mica.
Microprocessor chips (brought onto a Government construction site as separate units for incorporation into building systems during construction or repair and alteration of real property).
Nickel, primary, in ingots, pigs, shots, cathodes, or similar forms; nickel oxide and nickel salts.
Nitroguanidine (also known as picrite).
Nux vomica, crude.
Oiticica oil.
Olive oil.
Olives (green), pitted or unpitted, or stuffed, in bulk.
Opium, crude.
Oranges, mandarin, canned.
Petroleum, crude oil, unfinished oils, and finished products.
Pine needle oil.
Platinum and related group metals, refined, as sponge, powder, ingots, or cast bars.
Pyrethrum flowers.
Quartz crystals.
Quebracho.
Quinidine.
Quinine.
Rabbit fur felt.
Radium salts, source and special nuclear materials.
Rosettes.
Rubber, crude and latex.
Rutile.
Santonin, crude.
Secretin.
Shellac.
Silk, raw and unmanufactured.
Spare and replacement parts for equipment of foreign manufacture, and for which domestic parts are not available.
Spices and herbs, in bulk.
Sugars, raw.
Swords and scabbards.
Talc, block, steatite.
Tantalum.
Tapioca flour and cassava.
Tartar, crude; tartaric acid and cream of tartar in bulk.
Tea in bulk.
Thread, metallic (gold).
Thyme oil.
Tin in bars, blocks, and pigs.
Triprolidine hydrochloride.
Tungsten.
Vanilla beans.
Venom, cobra.
Wax, carnauba.
Wire glass.
Woods; logs, veneer, and lumber of the following species: Alaskan yellow cedar, angelique, balsa, ekki, greenheart, lignum vitae, mahogany, and teak.
Yarn, 50 Denier rayon.

(b) The determination in paragraph (a) of this section does not apply if the contracting officer learns before the time designated for receipt of offers or final proposal revisions that an article on the list has become available domestically in sufficient and reasonably available quantities of a satisfactory quality. The contracting officer shall amend the solicitation if purchasing the article, or if purchasing an end product that could contain such an article as a component, and shall specify in all new solicitations that the article has been found to be available and that offerors and contractors may not treat foreign components of the same class or kind as domestic components. In addition, a copy of supporting documentation shall be submitted to the appropriate council identified in 1.201–1 in accordance with agency procedures, for possible removal of the article from the list.

25.105 Determining reasonableness of cost.

(a) The contracting officer—

(1) Shall use the evaluation factors in paragraph (b) of this section unless the head of the agency makes a written determination that the use of higher factors is more appropriate. If the determination will be applicable to all agency acquisitions, the agency evaluation factors shall be published in agency regulations.

(2) Shall not apply evaluation factors to offers of eligible products if the acquisition is subject to a trade agreement under subpart 25.4.

(b) If there is a domestic offer that is not the low offer, and the restrictions of the Buy American Act apply to the low offer, the contracting officer shall determine the reasonableness of the cost of the domestic offer by adding to the price of the low offer, inclusive of duty—

(1) 6 percent, if the lowest domestic offer is from a large business concern.

(2) 12 percent, if the lowest domestic offer is from a small business concern. The contracting officer shall use this factor, or another factor established in agency regulations, in small business set-asides if the low offer is from a small business concern offering the product of a small business concern that is not a domestic end product (see subpart 19.5).

(c) The price of the domestic offer is reasonable if it does not exceed the evaluated price of the low offer after addition of the appropriate evaluation factor in accordance with paragraph (a) or (b) of this section.

Subpart 25.2—Buy American Act—Construction Materials

25.200 Scope of subpart.

This subpart implements the Buy American Act (41 U.S.C. 10a–10d) and Executive Order 10582, December 17, 1954 (as amended). It applies to contracts for the construction, alteration, or repair of any public building or public work in the United States.

25.201 Policy.

Except as provided in 25.202, only domestic construction materials shall be used in construction contracts performed in the United States.

25.202 Exceptions.

(a) When one of the following exceptions applies, foreign construction materials may be acquired without regard to the restrictions of the Buy American Act:

(1) *Impracticable or inconsistent with public interest.* The head of the agency may determine that application of the restrictions of the Buy American Act to a particular construction material would be impracticable or would be inconsistent with the public interest. The public interest exception applies when an agency has an agreement with a foreign government that provides a blanket exception to the Buy American Act.

(2) *Nonavailability.* The head of the contracting activity may determine that a particular construction material is not mined, produced, or manufactured in the United States in sufficient and reasonably available commercial quantities of a satisfactory quality. The determination of nonavailability of the articles listed at 25.104(a) and the procedures at 25.104(b) also apply if any such articles are acquired as construction materials.

(3) *Unreasonable cost.* The cost of domestic construction material is unreasonable if it exceeds the cost of foreign construction material by more than 6 percent, unless the head of the agency determines that a higher percentage is appropriate (see Executive Order 10582).

(b) *Determination and findings.* When a determination is made for any of the reasons stated in this section that certain foreign construction materials may be used, the contracting officer shall list the excepted materials in the contract. The agency shall make the findings justifying the exception available for public inspection.

(c) *Acquisitions under trade agreements.* For construction contracts with an estimated acquisition value of $6,909,500 or more, see 25.405. If the acquisition value is $7,143,000 or more, also see 25.403.

25.203 Preaward determinations.

(a) The contracting officer shall consider an offeror's request for a determination concerning the inapplicability of the Buy American Act for specifically identified construction materials if the request is received either before the time set for receipt of offers or submitted with the offer.

(b) The contracting officer shall evaluate any request for a determination regarding the inapplicability of the Buy American Act made before award, based on the information requested in the applicable clause at 52.225–9, Buy American Act—Balance of Payments Program—Construction Materials, paragraphs (c) and (d), or 52.225–11, Buy American Act—Balance of Payments Program—Construction Materials under Trade Agreements, paragraphs (c) and (d). The contracting officer may supplement this information with other readily available information.

(c) If the appropriate authority determines before award that an exception to the Buy American Act applies (other than a general exception based on the Trade Agreements Act or NAFTA), the contracting officer shall identify the excepted material in paragraph (b)(2) of the clause at 52.225–9 or paragraph (b)(3) of the clause at 52.225–11.

25.204 Evaluating offers of foreign construction material.

(a) Offerors proposing to use foreign construction material other than that listed by the Government in paragraph (b)(2) of the applicable clause at 52.225–9, or paragraph (b)(3) of 52.225–11, or excepted under the Trade Agreements Act or NAFTA (paragraph (b)(2) of 52.225–11), must provide the information required by paragraphs (c) and (d) of the respective clauses.

(b) Unless agency regulations specify a higher percentage, the contracting officer shall add to the offered price 6 percent of the cost of any foreign construction material proposed for exception from the requirements of the Buy American Act based on the unreasonable cost of domestic construction materials. In the case of a tie, the contracting officer shall give preference to an offer that does not include foreign construction material excepted at the request of the offeror on the basis of unreasonable cost.

(c) Offerors also may submit alternate offers based on use of equivalent domestic construction material to avoid possible rejection of the entire offer, if the Government determines that an exception permitting use of a particular foreign construction material does not apply.

(d) If award is made to an offeror that proposed foreign construction material not included in the applicable clause in the solicitation (paragraph (b)(2) of 52.225–9 or paragraph (b)(3) of 52.225–11), the contracting officer shall add these excepted materials to the list in the contract clause.

25.205 Postaward determinations.

(a) If a contractor requests a determination regarding the inapplicability of the Buy American Act after contract award, the contractor shall explain why the determination could not have been requested before contract award or why the need for such determination otherwise was not reasonably foreseeable. If the contracting officer concludes that the request should have been made before

contract award, the request may be denied.

(b) Evaluation of any request for a determination regarding the inapplicability of the Buy American Act made after contract award shall be based on information required by paragraphs (c) and (d) of the applicable clause at 52.225–9 or 52.225–11 and/or other information readily available to the contracting officer.

(c) If a determination is made after contract award that an exception to the Buy American Act applies, adequate consideration shall be negotiated and the contract shall be modified to allow use of the foreign construction material. When the basis for the exception is the unreasonable price of a domestic construction material, adequate consideration shall be at least the differential established in 25.202(a) or in accordance with agency procedures.

25.206 Noncompliance.

(a) The contracting officer is responsible for conducting Buy American Act investigations when available information indicates such action is warranted.

(b) Unless fraud is suspected, the contracting officer shall notify the contractor of the apparent unauthorized use of foreign construction material and shall request a reply, to include proposed corrective action.

(c) If an investigation reveals that a contractor or subcontractor has used foreign construction material without authorization, the contracting officer shall take appropriate action, including one or more of the following:

(1) Process a determination with regard to the inapplicability of the Buy American Act in accordance with 25.205.

(2) Consider requiring the removal and replacement of the unauthorized foreign construction material.

(3) If removal and replacement of foreign construction material incorporated in a building or work would be impracticable, cause undue delay, or otherwise be detrimental to the interests of the Government, the contracting officer may determine in writing that the foreign construction material need not be removed and replaced. Such a determination to retain foreign construction material does not constitute a determination that an exception to the Buy American Act applies, and this should be so stated in the determination. Further, such a determination to retain foreign construction material does not affect the Government's right to suspend or debar a contractor, subcontractor, or supplier for violation of the Buy American Act, or to exercise other contractual rights and remedies, such as reducing the contract price or terminating the contract for default.

(4) If the noncompliance is sufficiently serious, consider exercising appropriate contractual remedies, such as terminating the contract for default. Also consider preparing and forwarding a report to the agency suspending or debarring official in accordance with subpart 9.4. If the noncompliance appears to be fraudulent, refer the matter to other appropriate agency officials, such as the officer responsible for criminal investigation.

Subpart 25.3—Balance of Payments Program

25.300 Scope of subpart.

This subpart provides policies and procedures implementing the Balance of Payments Program. It applies to contracts for the purchase of supplies for use outside the United States and contracts for construction, alteration, or repair of any public building or public work outside the United States.

25.301 General.

The Balance of Payments Program restricts the purchase of supplies that are not domestic end products, for use outside the United States, and restricts the use of construction materials that are not domestic, for performance of construction contracts outside the United States. Its restrictions are similar to those of the Buy American Act. It uses the same definitions and evaluation procedures, except that a 50 percent factor is used to determine unreasonable cost. Exceptions to the Balance of Payments Program, especially for construction materials, are generally determined prior to solicitation and assignment of contracting responsibility. Excepted supplies and construction materials shall be identified in the contract.

25.302 Policy.

Except as provided in 25.303, only domestic end products shall be acquired for use outside the United States and only domestic construction materials shall be used for construction, repair, or maintenance of real property outside the United States.

25.303 Exceptions.

A foreign end product may be acquired for use outside the United States, or a foreign construction material may be used in construction outside the United States without regard to the restrictions of the Balance of Payments Program if—

(a) The estimated cost of the end product does not exceed the simplified acquisition threshold;

(b) The end product or construction material is listed at 25.104, or the head of the contracting activity determines that a requirement—

(1) Can only be filled by a foreign end product or construction material (see 25.103(b));

(2) Is for end products or construction materials that, by their nature or as a practical matter, can only be acquired in the geographic area concerned, *e.g.*, ice, books, or bulk material, such as sand, gravel, or other soil material, stone, concrete masonry units, or fired brick; or

(3) Is for perishable subsistence products and delivery from the United States would significantly impair their quality at the point of consumption;

(c) The acquisition of foreign end products is required by a treaty or executive agreement between governments;

(d) The end products are—

(1) Petroleum products; or

(2) For commissary resale;

(e) The end products are eligible products subject to the Trade Agreements Act, NAFTA, or the Israeli Trade Act, or the construction material is subject to the Trade Agreements Act or NAFTA;

(f) The cost of the domestic end product or construction material (including transportation and handling costs) exceeds the cost of the foreign end product or construction material by more than 50 percent. A differential greater than 50 percent may be used when specifically authorized by the head of the agency; or

(g) The agency has determined that it is not in the public interest to apply the restrictions of the Balance of Payments Program to the end product or construction material or that it is impracticable to apply the restrictions of the Balance of Payments Program to the construction material.

25.304 Procedures.

(a) *Solicitation of offers.* The contracting officer shall identify, in the solicitation, supplies and construction materials known in advance to be excepted from the procedures of this subpart.

(b) *Evaluation of offers.* The contracting officer shall—

(1) Evaluate offers for supplies in accordance with subpart 25.5; and

(2) Evaluate offers proposing foreign construction material by using the procedures at 25.204, except that a factor of 50 percent shall be applied to foreign construction material proposed

for exception from the requirements of the Balance of Payments Program on the basis of unreasonable cost of domestic construction materials.

(c) *Other procedures for construction.* For construction contracts, the procedures at 25.203, 25.205, and 25.206, for determinations and noncompliance under the Buy American Act, are also applicable to determinations and noncompliance under the Balance of Payments Program.

Subpart 25.4—Trade Agreements

25.400 Scope of subpart.

(a) This subpart provides policies and procedures applicable to acquisitions with a value greater than $25,000 that are subject to—

(1) The Agreement on Government Procurement, as approved by Congress in the Trade Agreements Act of 1979 (19 U.S.C. 2501 *et seq.*) (Trade Agreements Act) and as amended by the Uruguay Round Agreements Act (Pub. L. 103–465), including the Agreement on Trade in Civil Aircraft (19 U.S.C. 2513);

(2) The determination of the U.S. Trade Representative that end products granted duty-free entry under the Caribbean Basin Economic Recovery Act (19 U.S.C. 2701, *et seq.*) shall be treated as eligible products under the Trade Agreements Act (Caribbean Basin Trade Initiative);

(3) The North American Free Trade Agreement, as approved by Congress in the North American Free Trade Agreement Implementation Act of 1993 (19 U.S.C. 3301 note) (NAFTA); and

(4) The U.S.-Israel Free Trade Area Agreement, as approved by Congress in the United States-Israel Free Trade Area Implementation Act of 1985 (19 U.S.C. 2112 note) (Israeli Trade Act).

(b) For application of the trade agreements that are unique to individual agencies (Department of Defense, National Aeronautics and Space Administration, Department of Energy (Power Marketing Administration), and Department of the Interior (Bureau of Reclamation)), see agency regulations.

25.401 Exceptions.

This subpart does not apply to—

(a) Purchases under small business set-asides;

(b) Purchases of arms, ammunition, or war materials, or purchases indispensable for national security or for national defense purposes;

(c) Research and development contracts;

(d) Purchases of end products for resale;

(e) Purchases under subpart 8.6, Acquisition from Federal Prison Industries, Inc., and subpart 8.7, Acquisition from Nonprofit Agencies Employing People Who Are Blind or Severely Disabled; and

(f) Purchases not open to competition, when justified in accordance with subpart 6.3 (but see 25.408(b)).

25.402 General.

The trade agreements waive the applicability of the Buy American Act or the Balance of Payments Program for some foreign supplies and construction materials from certain countries. The value of the acquisition is a determining factor in the applicability of the trade agreements. When the restrictions of the Buy American Act or the Balance of Payments Program are waived for eligible products, offers of such products (eligible offers) receive equal consideration with domestic offers. However, eligible offers will not be given preference over a low acceptable foreign offer. Under the Trade Agreements Act, only U.S. made end products or eligible products may be acquired (also see 25.403(d)). See subpart 25.5 for evaluation procedures for supply contracts subject to trade agreements.

25.403 Trade Agreements Act.

(a) *General.* The Trade Agreements Act—

(1) Waives application of the Buy American Act and the Balance of Payments Program to the end products and construction materials of designated countries;

(2) Prohibits discriminatory practices on the basis of foreign ownership (see 25.403(c));

(3) Restricts purchases to end products identified in 25.403(d);

(4) Provides a specific waiver with regard to purchase of civil aircraft from countries that are party to the Agreement on Trade in Civil Aircraft (see 25.407); and

(5) Requires certain procurement procedures designed to ensure fair and open competition (see 25.408).

(b) *Applicability.* (1) The Trade Agreements Act applies to an acquisition for supplies or services if the estimated value of the acquisition is $186,000 or more; the Trade Agreements Act applies to an acquisition for construction if the estimated value of the acquisition is $7,143,000 or more. These dollar thresholds became effective January 1, 1998, and are subject to revision by the U.S. Trade Representative approximately every 2 years (see Executive Order 12260).

(2) To determine whether the Trade Agreements Act applies to the acquisition of products by lease, rental, or lease-purchase contract (including lease-to-ownership, or lease-with-option-to purchase), calculate the estimated acquisition value as follows:

(i) If a fixed-term contract of 12 months or less is contemplated, use the total estimated value of the acquisition.

(ii) If a fixed-term contract of more than 12 months is contemplated, use the total estimated value of the acquisition plus the estimated residual value of the leased equipment at the conclusion of the contemplated term of the contract.

(iii) If an indefinite-term contract is contemplated, use the estimated monthly payment multiplied by the total number of months that ordering would be possible under the proposed contract, *i.e.*, the initial ordering period plus any optional ordering periods.

(iv) If there is any doubt as to the contemplated term of the contract, use the estimated monthly payment multiplied by 48.

(3) The estimated value includes the value of all options.

(4) If, in any 12-month period, recurring or multiple awards for the same type of product or products are anticipated, use the total estimated value of these projected awards to determine whether the Trade Agreements Act applies. No acquisition shall be divided with the intent of reducing the estimated value of the acquisition below the dollar threshold of the Trade Agreements Act.

(c) *Nondiscrimination.* Subject to the provisions of U.S. law and regulation, a supplier established in a designated country or a Caribbean Basin country shall not be accorded less favorable treatment than is accorded to another supplier established in that country on the basis of—

(1) Foreign ownership or affiliation; or

(2) The place of production of the articles to be supplied; *provided* that the country of production is a designated country or a Caribbean Basin country.

(d) *Purchase restriction.* (1) In acquisitions subject to the Trade Agreements Act, only U.S. made end products or eligible products (designated, Caribbean Basin, or NAFTA country end products) shall be acquired unless offers for such end products are either not received or are insufficient to fulfill the requirements.

(2) This restriction does not apply to purchases by the Department of Defense from a country with which it has entered into a reciprocal agreement, as provided in departmental regulations.

25.404 Caribbean Basin Trade Initiative.

Under the Caribbean Basin Trade Initiative, the U.S. Trade Representative has determined that for acquisitions

subject to the Trade Agreements Act, Caribbean Basin country end products shall be treated as eligible products. This determination is effective until September 30, 1998.

25.405 North American Free Trade Agreement (NAFTA).

(a) An acquisition of supplies is not subject to NAFTA if the estimated value of the acquisition is $25,000 or less. For acquisitions subject to NAFTA, the contracting officer shall evaluate offers of NAFTA country end products without regard to the restrictions of the Buy American Act or the Balance of Payments Program, except that for acquisitions with an estimated value of less than $53,150, only Canadian end products are eligible products. Eligible products from NAFTA countries are entitled to the nondiscriminatory treatment of the Trade Agreements Act (see 25.403(c)). NAFTA does not prohibit the purchase of other foreign end products.

(b) NAFTA applies to construction materials if the estimated value of the construction contract is $6,909,500 or more.

(c) The procedures in 25.408 apply to the acquisition of NAFTA country services. These are services provided by a firm established in a NAFTA country under service contracts with an estimated acquisition value of $53,150 or more ($6,909,500 or more for construction), except for the following excluded services (Federal Service Code or Category from the Federal Procurement Data System Product/Service Code Manual indicated in parentheses):

(1) Information processing and related telecommunications services.

(i) ADP telecommunications and transmission services (D304).

(ii) ADP teleprocessing and timesharing services (D305).

(iii) Telecommunication network management services (D316).

(iv) Automated news services, data services, or other information services (D317).

(v) Other ADP and telecommunications services (D399).

(2) Maintenance, repair, modification, rebuilding, and installation of equipment.

(i) Maintenance, repair, modification, rebuilding, and installation of equipment related to ships (J019).

(ii) Non-nuclear ship repair (J998).

(3) Operation of Government-owned facilities.

(i) All facilities operated by the Department of Defense, Department of Energy, and the National Aeronautics and Space Administration.

(ii) Research and development facilities (M180).

(4) Utilities—All classes (S).

(5) Transportation, travel, and relocation services (V), except travel agent services (V302).

(6) All services purchased in support of military forces overseas.

(7) Construction dredging services.

25.406 Israeli Trade Act.

Acquisitions of supplies by most agencies are subject to the Israeli Trade Act, if the estimated value of the acquisition is $50,000 or more, but does not exceed the Trade Agreements Act threshold for supplies (see 25.403(b)(1)). Agencies other than the Department of Defense, the Department of Energy, the Department of Transportation, the Bureau of Reclamation of the Department of the Interior, the Federal Housing Finance Board, and the Office of Thrift Supervision shall evaluate offers of Israeli end products without regard to the restrictions of the Buy American Act or the Balance of Payments Program. The Israeli Trade Act does not prohibit the purchase of other foreign end products.

25.407 Agreement on Trade in Civil Aircraft.

Under the authority of Section 303 of the Trade Agreements Act, the U.S. Trade Representative has waived the Buy American Act for civil aircraft and related articles that meet the substantial transformation test of the Trade Agreements Act for countries that are parties to the Agreement on Trade in Civil Aircraft. Those countries are Austria, Belgium, Canada, Denmark, Finland, France, Germany, Greece, Ireland, Italy, Japan, Luxembourg, the Netherlands, Norway, Portugal, Romania, Spain, Sweden, Switzerland, and the United Kingdom.

25.408 Procedures.

(a) When the Trade Agreements Act or NAFTA applies, the contracting officer shall—

(1) Comply with the requirements of 5.203, Publicizing and response time;

(2) Not include technical requirements in solicitations solely to preclude the acquisition of eligible products;

(3) Specify in solicitations that offers shall be submitted in the English language and in U.S. dollars (see 52.214–34, Submission of Offers in the English Language, and 52.214–35, Submission of Offers in U.S. Currency, or paragraph (c)(5) of 52.215–1, Instruction to Offerors—Competitive Acquisitions);

(4) Open offers in the presence of an impartial witness and record this individual's name in the contract file, if anticipating competitive negotiations; and

(5) Provide unsuccessful offerors from designated or NAFTA countries written notice within 3 days after award of a contract for an eligible product, in accordance with 14.409–1 and 15.503. ''Day,'' for purposes of the notification process, means calendar day, except that if the last day of the period is a Saturday, Sunday, or legal holiday, the period will be extended until the first subsequent day that is not a Saturday, Sunday, or legal holiday.

(b) Acquisitions under the Trade Agreements Act are subject to the competition requirements of part 6 (see 6.303–1(d)).

(c) See subpart 25.5 for evaluation procedures and examples.

Subpart 25.5—Evaluating Foreign Offers—Supply Contracts

25.501 General.

The contracting officer—

(a) Shall apply the evaluation procedures of this subpart to each line item of an offer unless either the offer or the solicitation specifies evaluation on a group basis (see 25.503).

(b) May rely on the offeror's certification of end product origin when evaluating a foreign offer.

(c) Shall identify and reject offers of end products that are prohibited or sanctioned in accordance with subparts 25.6 and 25.7.

(d) Shall not use the Buy American Act and Balance of Payments Program evaluation factors prescribed in this subpart to provide a preference for one foreign offer over another foreign offer.

25.502 Application.

(a) Unless otherwise specified in agency regulations, perform the following steps in the order presented:

(1) Eliminate all offers or offerors that are unacceptable for reasons other than price; *e.g.*, nonresponsive, debarred or suspended, sanctioned (see subpart 25.6), or a prohibited source (see subpart 25.7).

(2) Rank the remaining offers by price.

(b) For acquisitions subject to the Trade Agreements Act (see 25.401 and 25.403(b))—

(1) Consider only offers of U.S. made, designated country, Caribbean Basin country, or NAFTA country end products, unless no offers of such end products were received;

(2) If the agency gives the same consideration given eligible offers to offers of U.S. made end products that are not domestic end products, award on the low offer.

Otherwise, evaluate in accordance with agency procedures; and

(3) If there were no offers of U.S. made, designated country, Caribbean Basin country, or NAFTA country end products, make a nonavailability determination (see 25.103(b)(2)) and award on the low offer (see 25.403(d)).

(c) For acquisitions not subject to the Trade Agreements Act—

(1) If the low offer is a domestic offer or an eligible offer under a trade agreement other than the Trade Agreements Act, award on that offer.

(2) If the low offer is a noneligible offer and there were no domestic offers, make a nonavailability determination (see 25.103(b)(2)) and award on the low offer.

(3) If the low offer is a noneligible offer and there is an eligible offer that is lower than the lowest domestic offer, award on the low offer. The Buy American Act and the Balance of Payments Program provide an evaluation preference only for domestic offers.

(4) Otherwise, apply the appropriate evaluation factor provided in 25.105 or 25.301 to the low offer.

(i) If the evaluated price of the low offer remains less than the lowest domestic offer, award on the low offer.

(ii) If the price of the lowest domestic offer is less than the evaluated price of the low offer, award on the lowest domestic offer.

(d) When the solicitation specifies award on the basis of factors in addition to cost or price, apply the evaluation factors as specified in this section and use the evaluated cost or price in determining the offer that represents the best value to the Government.

(e) *Ties.* (1) If application of an evaluation factor results in a tie between a domestic offer and a foreign offer, award on the domestic offer.

(2) If no evaluation preference was applied (*i.e.*, offers afforded nondiscriminatory treatment under the Buy American Act or Balance of Payments Program), resolve ties between domestic and foreign offers by a witnessed drawing of lots by an impartial individual.

(3) Resolve ties between foreign offers from small business concerns (under the Buy American Act and Balance of Payments Program, a small business offering a manufactured article that does not meet the definition of ''domestic end product'' is a foreign offer) or foreign offers from a small business concern and a large business concern in accordance with 14.408–6(a).

25.503 Group offers.

(a) If the solicitation or an offer specifies that award can be made only on a group of line items or on all line items contained in the solicitation or offer, reject the offer—

(1) If any part of the award would consist of sanctioned or prohibited end products (see subparts 25.6 and 25.7); or

(2) If the Trade Agreements Act applies and part of the offer consists of items restricted under 25.403(d).

(b) Where an offeror restricts award to a group of line items or to all line items contained in its offer, determine for each line item whether to apply an evaluation factor (see 25.504–4, Example 7):

(1) First, evaluate offers that do not specify an award restriction on a line item basis in accordance with 25.502, determining a tentative award pattern by selecting on each line item the offer with the lowest evaluated price.

(2) Evaluate an offer that specifies an award restriction against the proposed prices of the tentative award pattern, applying the appropriate evaluation factor on a line item basis.

(3) Compute the total evaluated price for the tentative award pattern and the offer that specified an award restriction.

(4) Unless the total evaluated price of the offer that specified an award restriction is less than the total evaluated price of the tentative award pattern, award based on the tentative award pattern.

(c) If the solicitation specifies that award will be made only on a group of line items or all line items contained in the solicitation, determine the category of end products on the basis of each line item, but determine whether to apply an evaluation factor on the basis of the group of items (see 25.504–4, Example 8).

(1) If the proposed price of domestic end products exceeds 50 percent of the total proposed price of the group, evaluate the entire group as a domestic offer. Evaluate all the other groups as foreign offers.

(2) For foreign offers, if the proposed price of domestic end products and eligible products exceeds 50 percent of the total proposed price of the group, evaluate the entire group as an eligible offer.

(3) Apply the evaluation factor to the entire group in accordance with 25.502.

25.504 Evaluation examples.

The following examples illustrate the application of the evaluation procedures in 25.502 and 25.503. The examples assume that the contracting officer has eliminated all offers that are unacceptable for reasons other than price or a trade agreement (see 25.502(a)(1)). Although these examples are generally constructed in terms of the Buy American Act, the same evaluation procedures would apply under the Balance of Payments Program. The evaluation factor may change as provided in agency regulations.

25.504–1 Buy American Act/Balance of Payments Program.

(a) *Example 1.*

Offer A	$11,000	Domestic end product, small business.
Offer B	10,700	Domestic end product, large business.
Offer C	10,000	Foreign end product (noneligible).

Analysis: This acquisition is for end products for use in the United States. The Buy American Act applies. Therefore, all foreign end products are noneligible. Perform the steps in 25.502(a) . Since the low domestic offer, Offer B, is from a large business, apply the 6 percent factor to Offer C. The resulting evaluated price of $10,600 remains lower than Offer B. The cost of Offer B is; therefore, unreasonable. Award on Offer C at $10,000 (see 25.502(c)(4)(i)).

(b) *Example 2.*

Offer A	$11,000	Domestic end product, small business.
Offer B	10,700	Domestic end product, large business.
Offer C	10,200	Foreign end product (noneligible).

Analysis: This acquisition is for end products for use outside the United States. Therefore, the Balance of Payments Program applies and the Buy American Act does not. Apply the 50 percent factor to Offer C. The evaluated price of $15,300 exceeds the price of Offer B . Award on Offer B (see 25.502(c)(4)(ii)).

25.504–2 Trade Agreements Act/Caribbean Basin Trade Initiative/NAFTA.

(c) *Example 3.*

Offer A	$204,000	U.S. made end product (not domestic).
Offer B	203,000	U.S. made end product, small business (domestic).
Offer C	200,000	Eligible product.
Offer D	195,000	Noneligible product (not U.S. made).

Analysis: Eliminate Offer D because the Trade Agreements Act applies and there is an offer of a U.S. made or an eligible product (see 25.502(b)(1)). If the agency gives the same consideration given eligible offers to offers of U.S. made end products that are not domestic offers, it is unnecessary to determine whether U.S. made end products are domestic (large or small business). No further analysis is necessary. Award on the low remaining offer, Offer C (see 25.502(b)(2)).

25.504–3 Other trade agreements.

(a) *Example 4.*

Offer A	$105,000	Domestic end product, small business.
Offer B	100,000	Eligible product.

Analysis: Since the offer is an eligible offer, award on the low offer (see 25.502(c)(1)).

(b) *Example 5.*

Offer A	$105,000	Eligible product.
Offer B	103,000	Noneligible product.

Analysis: Since the acquisition is not subject to the Trade Agreements Act, the noneligible offer can be considered. Since no domestic offer was received, make a nonavailability determination and award on Offer B (see 25.502(c)(2)).

(c) *Example 6.*

Offer A	$105,000	Domestic end product, large business.
Offer B	103,000	Eligible product.
Offer C	100,000	Noneligible product.

Analysis: Since the acquisition is not subject to the Trade Agreements Act, the noneligible offer can be considered. Because the eligible offer (Offer B) is lower than the domestic offer (Offer A), no evaluation factor applies to the low offer (Offer C). Award on the low offer (see 25.502(c)(3)).

25.504–4 Group award basis.

Key:
DO=Domestic end product
EL=Eligible product
NEL=Noneligible product

(a) *Example 7.*

Item	Offers		
	A	B	C
1	DO=$55,000	EL=$56,000	NEL=$50,000
2	NEL=13,000	EL=10,000	EL=13,000
3	NEL=11,500	DO=12,000	DO=10,000
4	NEL=24,000	EL=28,000	NEL=22,000
5	DO=18,000	NEL=10,000	DO=14,000
	121,500	116,000	109,000

Problem: Offeror C specifies all-or-none award. Assume all offerors are large businesses. The Trade Agreements Act does not apply.

Analysis: (see 25.503)

STEP 1: Evaluate Offers A & B before considering Offer C and determine which offer has the lowest evaluated cost for each line item (the tentative award pattern):

Item 1: Low offer A is domestic; select A.

Item 2: Low offer B is eligible; do not apply factor; select B.

Item 3: Low offer A is noneligible and Offer B is a domestic offer. Apply 6% factor to Offer A. The evaluated price of Offer A is higher than Offer B; select B.

Item 4: Low offer A is noneligible. Since neither offer is a domestic offer, no evaluation factor applies; select A.

Item 5: Low offer B is noneligible; apply 6% factor to Offer B. Offer A is still higher than Offer B; select B.

STEP 2: Evaluate Offer C against the tentative award pattern for Offers A and B:

Item	Offers		
	Low offer	Tentative award patterns from A and B	C
1	A	DO=$55,000	NEL=$53,000*
2	B	EL=10,000	EL=13,000
3	B	DO=12,000	DO=10,000
4	A	NEL=24,000	NEL=22,000
5	B	NEL=10,600*	DO=14,000
		111,600	112,000

*Offer + 6 percent.

On a line item basis, apply a factor to any noneligible offer if the other offer for that line item is domestic.

For Item 1, apply a factor to Offer C because Offer A is domestic and the acquisition was not subject to the Trade Agreements Act. The evaluated price of Offer C, Item 1, becomes $53,000 ($50,000 plus 6 percent). Apply a factor to Offer B, Item 5, because it is a noneligible product and Offer C is domestic. The evaluated price of Offer B is $10,600 ($10,000 plus 6%). The remaining items are evaluated without applying a factor.

STEP 3: The tentative unrestricted award pattern from Offers A and B is lower than the evaluated price of Offer C. Award the combination of Offers A and B. Note that if Offer C had not specified all-or-none award, award would be made on Offer C for line items 1, 3, and 4, totaling an award of $82,000.

(b) *Example 8.*

Item	Offers		
	A	B	C
1	DO=$50,000	EL=$50,500	NEL=$50,000
2	NEL=10,300	NEL=10,000	EL=10,200
3	EL=20,400	EL=21,000	NEL=20,200
4	DO=10,500	DO=10,300	DO=10,400
	91,200	91,800	90,800

Problem: The solicitation specifies award on a group basis. Assume the Buy American Act applies and all offerors are large businesses.

Analysis: (see 25.503(c))

STEP 1: Determine which of the offers are domestic (see 25.503(c)(1)):

	Domestic percent	Determination
A	60,500/91,200=66.3	Domestic.
B	10,300/91,800=11.2	Foreign.
C	10,400/90,800=11.5	Foreign.

STEP 2: Determine whether foreign offers are eligible or noneligible offers (see 25.503(c)(2)):

	Domestic+eligible percent	Determination
A	N/A	Domestic.
B	81,800/91,800=89.1	Eligible.
C	20,600/90,800=22.7	Noneligible.

STEP 3: Determine whether to apply an evaluation factor (see 25.503(c)(3)). The low offer (Offer C) is a foreign offer. There is no eligible offer lower than the domestic offer. Therefore, apply the factor to the low offer. Addition of the 6 percent factor (use 12 percent if Offer A is a small business) to Offer C yields an evaluated price of $96,248 ($90,800 + 6%). Award on Offer A (see 25.502(c)(4)(ii)). Note that, if Offer A were greater than Offer B, an evaluation factor would not be applied and award would be on Offer C (see 25.502(c)(3)).

Subpart 25.6—Trade Sanctions

25.600 Scope of subpart.

This subpart implements sanctions imposed by the President (58 FR 3116, May 28, 1993) pursuant to Section 305(g)(1) of the Trade Agreements Act of 1979, as amended (19 U.S.C. 2515(g)(1)), on European Union (EU) states (sanctioned EU member states) that discriminate against U.S. products or services. This subpart does not apply to contracts for supplies or services awarded and performed outside of the United States or its territories, or to the Department of Defense. For thresholds unique to individual agencies (e.g., the Power Marketing Administration of the Department of Energy), see agency regulations.

25.601 Policy.

(a) Except as provided in 25.602, agencies shall not award contracts for—

(1) Sanctioned EU country end products with an estimated acquisition value less than $186,000;

(2) Sanctioned EU country construction with an estimated acquisition value less than $7,143,000; or

(3) Sanctioned EU country services as follows (Federal Service Code or Category from the Federal Procurement Data System Product/Service Code Manual is indicated in parentheses):

(i) Service contracts regardless of acquisition value for—

(A) All transportation services, including launching services (all V codes, J019, J998, J999, K019);

(B) Dredging (Y216, Z216);

(C) Management and operation of certain Government or privately-owned facilities used for Government purposes, including Federally Funded Research and Development Centers (all M codes);

(D) Development, production or coproduction of program material for broadcasting, such as motion pictures (T006, T016);

(E) Research and development (all A codes);

(F) Airport concessions (S203);

(G) Legal services (R418);

(H) Hotel and restaurant services (S203);

(I) Placement and supply of personnel services (V241, V251);

(J) Investigation and security services (S206, S211, R423);

(K) Education and training services (all U codes, R419);

(L) Health and social services (all O codes, all G codes);

(M) Recreational, cultural, and sporting services (G003); or

(N) Telecommunication services (encompassing only voice telephony, telex, radio telephony, paging, and satellite services) (S1, D304, D305, D316, D317, and D399).

(ii) All other service contracts with an estimated acquisition value less than $186,000.

(b) Determine the applicability of sanction thresholds in the manner provided at 25.403(b).

25.602 Exceptions.

(a) The sanctions in 25.601 do not apply to—

(1) Purchases at or below the simplified acquisition threshold awarded by simplified acquisition procedures;

(2) Total small business set-asides in accordance with 19.502–2;

(3) Contracts in support of U.S. national security interests; or

(4) Contracts for essential spare, repair, or replacement parts not otherwise available from nonsanctioned countries.

(b)(1) The head of the agency, without power of redelegation, may authorize the award of a contract or class of contracts for sanctioned EU country end products, services, and construction, the purchase of which is otherwise prohibited by 25.601(a), if the head of the agency determines that such action is necessary—

(i) In the public interest;

(ii) To avoid the restriction of competition in a manner that would limit the acquisition in question to, or would establish a preference for, the services, articles, materials, or supplies of a single manufacturer or supplier; or

(iii) Because there would be or are an insufficient number of potential or actual offerors to ensure the acquisition of services, articles, materials, or supplies of requisite quality at competitive prices.

(2) When a determination is made in accordance with paragraph (b)(1) of this section, the agency shall notify the U.S. Trade Representative within 30 days after contract award.

Subpart 25.7—Prohibited Sources

25.701 Restrictions.

(a) The Government does not acquire supplies or services that cannot be imported lawfully into the United States. Therefore, agencies and their contractors and subcontractors shall not acquire any supplies or services originating from sources within, or that were located in or transported from or through—

(1) Cuba (31 CFR part 515);

(2) Iran (31 CFR part 560);

(3) Iraq (31 CFR part 575);

(4) Libya (31 CFR part 550);

(5) North Korea (31 CFR part 500); or

(6) Sudan (Executive Order 13067).

(b) Agencies and their contractors and subcontractors shall not acquire any supplies or services from entities controlled by the Government of Iraq (Executive Orders 12722 and 12724).

25.702 Source of further information.

Questions concerning the restrictions in 25.701 should be referred to the Department of the Treasury, Office of Foreign Assets Control, Washington, D.C. 20220 (Telephone (202) 622–2520).

Subpart 25.8—Other International Agreements and Coordination

25.801 General.

Treaties and agreements between the United States and foreign governments affect the manner in which offers from foreign entities are evaluated and the performance of contracts in foreign countries.

25.802 Procedures.

(a) When placing contracts with contractors located outside the United States, for performance outside the United States, contracting officers shall—

(1) Determine the existence and applicability of any international agreements and ensure compliance with these agreements; and

(2) Conduct the necessary advance acquisition planning and coordination between the appropriate U.S. executive agencies and foreign interests as required by these agreements.

(b) Many international agreements are compiled in the ''United States Treaties and Other International Agreements'' series published by the Department of State. Copies of this publication are normally available in overseas legal offices and U.S. diplomatic missions.

(c) Contracting officers shall award all contracts with Taiwanese firms or organizations through the American Institute of Taiwan (AIT). AIT is under contract to the Department of State.

Subpart 25.9—Customs and Duties

25.900 Scope of subpart.

This subpart provides policies and procedures for exempting from import duties certain supplies purchased under Government contracts.

25.901 Policy.

United States laws impose duties on foreign supplies imported into the customs territory of the United States. Certain exemptions from these duties are available to Government agencies. Agencies shall use these exemptions when the anticipated savings to appropriated funds will outweigh the administrative costs associated with processing required documentation.

25.902 Procedures.

For regulations governing importations and duties, see the Customs Regulations issued by the U.S. Customs Service, Department of the Treasury (19 CFR Chapter 1). Except as provided elsewhere in the Customs Regulations (see 19 CFR 10.100), all shipments of imported supplies purchased under Government contracts are subject to the usual Customs entry and examination requirements. Unless the agency obtains an exemption (see 25.903), those shipments are also subject to duty.

25.903 Exempted supplies.

(a) Subchapters VIII and X of Chapter 98 of the Harmonized Tariff Schedule of the United States (19 U.S.C. 1202) list supplies for which exemptions from duty may be obtained when imported into the customs territory of the United States under a Government contract. For certain of these supplies, the contracting agency must certify to the Commissioner of Customs that they are for the purpose stated in the

Harmonized Tariff Schedule (see 19 CFR 10.102 through 10.104, 10.114, and 10.121 and 15 CFR part 301 for requirements and formats).

(b) Supplies (excluding equipment) for Government-operated vessels or aircraft may be withdrawn from any customs-bonded warehouse, from continuous customs custody elsewhere than in a bonded warehouse, or from a foreign-trade zone, free of duty and internal revenue tax as provided in 19 U.S.C. 1309 and 1317. The contracting activity shall cite this authority on the appropriate customs form when making such purchases (see 19 CFR 10.59 through 10.65).

Subpart 25.10—Additional Foreign Acquisition Regulations

25.1001 Waiver of right to examination of records.

(a) *Policy.* The clause at 52.215–2, Audit and Records—Negotiation, prescribed at 15.209(b), implements 10 U.S.C. 2313 and 41 U.S.C. 254d. The basic clause authorizes examination of records by the Comptroller General.

(1) The contracting officer shall use the basic clause, whenever possible, in negotiated contracts with foreign contractors.

(2) The contracting officer may use the clause with its Alternate III in contracts with foreign contractors after—

(i) Exhausting all reasonable efforts to include the basic clause;

(ii) Considering factors such as alternate sources of supply, additional cost, and time of delivery; and

(iii) The head of the agency has executed a determination and findings in accordance with paragraph (b) of this section, with the concurrence of the Comptroller General. However, concurrence of the Comptroller General is not required if the contractor is a foreign government or agency thereof or is precluded by the laws of the country involved from making its records available for examination.

(b) *Determination and findings.* The determination and findings shall—

(1) Identify the contract and its purpose, and whether it is a contract with a foreign contractor or with a foreign government or agency thereof;

(2) Describe the efforts to include the basic clause;

(3) State the reasons for the contractor's refusal to include the basic clause;

(4) Describe the price and availability of the supplies or services from the United States and other sources; and

(5) Determine that it will best serve the interest of the United States to use the clause with its Alternate III.

25.1002 Use of foreign currency.

(a) Unless a specific currency is required by international agreement or by the Trade Agreements Act (see 25.408(a)(3)), contracting officers shall determine whether solicitations for contracts to be entered into and performed outside the United States will require submission of offers in U.S. currency or a specified foreign currency. In unusual circumstances, the contracting officer may permit submission of offers in other than a specified currency.

(b) To ensure a fair evaluation of offers, solicitations generally should require all offers to be priced in the same currency. However, if submission of offers in other than a specified currency is permitted, the contracting officer shall convert the offered prices to U.S. currency for evaluation purposes. The contracting officer shall use the current market exchange rate from a commonly used source in effect as follows:

(1) For acquisitions conducted using sealed bidding procedures, on the date of bid opening; or

(2) For acquisitions conducted using negotiation procedures—

(i) On the date specified for receipt of offers if award is based on initial offers; otherwise

(ii) On the date specified for receipt of final proposal revisions.

(c) If a contract is priced in foreign currency, the agency shall ensure that adequate funds are available to cover currency fluctuations to avoid a violation of the Anti-Deficiency Act (31 U.S.C. 1341, 1342, 1511–1519).

Subpart 25.11—Solicitation Provisions and Contract Clauses

25.1101 Acquisition of supplies.

The following provisions and clauses apply to the acquisition of supplies and the acquisition of services involving the furnishing of supplies.

(a) The contracting officer shall—

(1) Insert the clause at 52.225–1, Buy American Act—Balance of Payments Program—Supplies, in solicitations and contracts with a value exceeding $2,500 but not exceeding $25,000, and in solicitations and contracts with a value exceeding $25,000, when none of the clauses prescribed in paragraphs (b) and (c) of this section apply, except when—

(i) The solicitation is restricted to domestic end products in accordance with subpart 6.3;

(ii) The acquisition is for supplies to be used within the United States and an exception to the Buy American Act applies (*e.g.*, nonavailability or public interest); or

(iii) The acquisition is for supplies to be used outside the United States and an exception to the Balance of Payments Program applies.

(2) Insert the provision at 52.225–2, Buy American Act—Balance of Payments Program Certificate, in solicitations containing the clause at 52.225–1.

(b) The contracting officer shall—

(1)(i) Insert the clause at 52.225–3, Buy American Act—North American Free Trade Agreement—Israeli Trade Act—Balance of Payments Program, in solicitations and contracts with a value exceeding $25,000 but less than $186,000, unless the acquisition is exempt from the North American Free Trade Agreement and the Israeli Trade Act (see 25.401). For acquisitions of agencies not subject to the Israeli Trade Act (25.406), see agency regulations.

(ii) If the acquisition exceeds $25,000 but is less than $50,000, use the clause with its Alternate I.

(iii) If the acquisition value is $50,000 or more but less than $53,150, use the clause with its Alternate II.

(2)(i) Insert the provision at 52.225–4, Buy American Act—North American Free Trade Agreement—Israeli Trade Act— Balance of Payments Program Certificate, in solicitations containing the clause at 52.225–3.

(ii) If the acquisition value exceeds $25,000 but is less than $50,000, use the provision with its Alternate I.

(iii) If the acquisition value is $50,000 or more but less than $53,150, use the provision with its Alternate II.

(c) The contracting officer shall—

(1) Insert the clause at 52.225–5, Trade Agreements, in solicitations and contracts valued at $186,000 or more, if the Trade Agreements Act applies (see 25.401 and 25.403) and the agency has determined that the restrictions of the Buy American Act or Balance of Payments Program are not applicable to U.S. made end products. If the agency has not made such a determination, the contracting officer shall follow agency procedures.

(2) Insert the provision at 52.225–6, Trade Agreements Certificate, in solicitations containing the clause at 52.225–5.

(d) The contracting officer shall insert the provision at 52.225–7, Waiver of Buy American Act for Civil Aircraft and Related Articles, in solicitations for civil aircraft and related articles (see 25.407).

(e) The contracting officer shall insert the clause at 52.225–8, Duty-Free Entry, in solicitations and contracts for supplies that may be imported into the United States and for which duty-free entry may be obtained in accordance

with 25.903(a), if the value of the acquisition—

(1) Exceeds $100,000; or

(2) Is $100,000 or less, but the savings from waiving the duty is anticipated to be more than the administrative cost of waiving the duty. When used for acquisitions valued at $100,000 or less, paragraphs (b)(1) and (i)(2) of the clause may be modified to reduce the dollar figure.

25.1102 Acquisition of construction.

The contracting officer shall—

(a) Insert the clause at 52.225–9, Buy American Act—Balance of Payments Program—Construction Materials, in solicitations and contracts for construction valued at less than $6,909,500. If specified in agency regulations, substitute a higher evaluation percentage in paragraph (b)(3)(i) of the clause.

(b)(1) Insert the provision at 52.225–10, Notice of Buy American Act/Balance of Payments Program Requirement—Construction Materials, in solicitations containing the clause at 52.225–9.

(2) If insufficient time is available to process a determination regarding the inapplicability of the Buy American Act or Balance of Payments Program before receipt of offers, use the provision with its Alternate I.

(c)(1) Insert the clause at 52.225–11, Buy American Act—Balance of Payments Program—Construction Materials Under Trade Agreements, in solicitations and contracts valued at $6,909,500 or more. If specified in agency regulations, substitute a higher evaluation percentage in paragraph (b)(4)(i) of the clause.

(2) For acquisitions valued at $6,909,500 or more, but less than $7,143,000, use the clause with its Alternate I.

(d)(1) Insert the provision at 52.225–12, Notice of Buy American Act/Balance of Payments Program Requirement—Construction Materials Under Trade Agreements, in solicitations containing the clause at 52.225–11.

(2) If insufficient time is available to process a determination regarding the inapplicability of the Buy American Act or Balance of Payments Program before receipt of offers, use the provision with its Alternate I.

25.1103 Other provisions and clauses.

(a) *Restrictions on certain foreign purchases.* The contracting officer shall insert the clause at 52.225–13, Restrictions on Certain Foreign Purchases, in solicitations and contracts with a value exceeding $2,500.

(b) *Translations.* The contracting officer shall insert the clause at 52.225–14, Inconsistency Between English Version and Translation of Contract, in solicitations and contracts where translation into another language is anticipated.

(c) *Sanctions.* (1) Except as provided in paragraph (c)(2) of this section, the contracting officer shall insert the clause at—

(i) 52.225–15, Sanctioned European Union Country End Products, in solicitations and contracts for supplies valued at less than $186,000; or

(ii) 52.225–16, Sanctioned European Union Country Services, in solicitations and contracts for services—

(A) Listed in 25.601(a)(3)(i); or

(B) Valued at less than $186,000.

(2) The clauses in paragraph (c)(1) of this section shall not be used in—

(i) Solicitations issued and contracts awarded by a contracting activity located outside of the United States or its territories, provided the supplies will be used or the services performed outside of the United States or its territories;

(ii) Purchases at or below simplified acquisition threshold awarded using simplified acquisition procedures;

(iii) Total small business set-asides;

(iv) Contracts in support of U.S. national security interests;

(v) Contracts for essential spare, repair, or replacement parts available only from sanctioned EU member states; or

(vi) Contracts where the head of the agency has made a determination in accordance with 25.602(b).

(d) *Foreign currency offers.* The contracting officer shall—

(1) Insert the provision at 52.225–17, Evaluation of Foreign Currency Offers, in solicitations that permit the use of other than a specified currency; and

(2) Insert in the provision the source of the rate to be used in the evaluation of offers.

PART 52—SOLICITATION PROVISIONS AND CONTRACT CLAUSES

14. Section 52.212–3 is amended by revising the date of the provision and paragraphs (f) and (g) to read as follows:

52.212–3 Offeror Representations and Certifications—Commercial Items.

* * * * *

Offeror Representations and Certifications—Commercial Items (Date)

* * * * *

(f) *Buy American Act—Balance of Payments Program Certificate.* (Applies only if the clause at Federal Acquisition Regulation (FAR) 52.225–1, Buy American Act— Balance of Payments Program—Supplies, is included in this solicitation.)

(1) The offeror certifies that each end product, except those listed in paragraph (f)(2) of this provision, is a domestic end product as defined in the clause entitled ''Buy American Act—Balance of Payments Program—Supplies'' and that components of unknown origin have been considered to have been mined, produced, or manufactured outside the United States. The offeror shall list as foreign end products those end products manufactured in the United States that do not qualify as domestic end products.

(2) Foreign End Products:

Line Item No.

_____

_____

_____

Country of Origin

_____

_____

_____

(List as necessary)

(3) Offers will be evaluated in accordance with the policies and procedures of FAR Part 25.

(g)(1) *Buy American Act—North American Free Trade Agreement—Israeli Trade Act—Balance of Payments Program Certificate.* (Applies only if the clause at FAR 52.225–3, Buy American Act—North American Free Trade Agreement—Israeli Trade Act—Balance of Payments Program, is included in this solicitation.)

(i) The offeror certifies that each end product, except those listed in paragraph (g)(1)(ii) or (g)(1)(iii) of this provision, is a domestic end product (as defined in the clause of this solicitation entitled ''Buy American Act—North American Free Trade Agreement Implementation Act—Israeli Trade Act—Balance of Payments Program,'' and that components of unknown origin have been considered to have been mined, produced, or manufactured outside the United States.

(ii) The offeror certifies that the following supplies are NAFTA country end products or Israeli end products as defined in the clause of this solicitation entitled ''Buy American Act—North American Free Trade Agreement—Israeli Trade Act—Balance of Payments Program.''

NAFTA Country or Israeli End Products:

Line Item No.

_____

_____

_____

Country of Origin

_____

_____

_____

(List as necessary)

(iii) The offeror shall list those supplies that are foreign end products (other than those listed in paragraph (g)(1)(ii) of this provision) as defined in the clause of this solicitation entitled ''Buy American Act—North American Free Trade Agreement—Israeli Trade Act—Balance of Payments Program.'' The offeror shall list as other foreign end products those end products

manufactured in the United States that do not qualify as domestic end products.

Other Foreign End Products:

Line Item No.

_____

_____

_____

Country of Origin

_____

_____

_____

(List as necessary)

(iv) Offers will be evaluated in accordance with the policies and procedures of FAR Part 25.

(2) *Buy American Act—North American Free Trade Agreements—Israeli Trade Act—Balance of Payments Program Certificate, Alternate I (DATE).* If Alternate I to the clause at FAR 52.225–3 is included in this solicitation, substitute the following paragraph (g)(1)(ii) for paragraph (g)(1)(ii) of the basic provision:

(g)(1)(ii) The offeror certifies that the following supplies are Canadian end products as defined in the clause of this solicitation entitled ''Buy American Act—North American Free Trade Agreement—Israeli Trade Act—Balance of Payments Program.''

Canadian End Products:

Line Item No.

_____

_____

_____

(List as necessary)

(3) *Buy American Act—North American Free Trade Agreements—Israeli Trade Act—Balance of Payments Program Certificate, Alternate II (DATE).* If Alternate II to the clause at FAR 52.225–3 is included in this solicitation, substitute the following paragraph (g)(1)(ii) for paragraph (g)(1)(ii) of the basic provision:

(g)(1)(ii) The offeror certifies that the following supplies are Canadian end products or Israeli end products as defined in the clause of this solicitation entitled ''Buy American Act—North American Free Trade Agreement—Israeli Trade Act—Balance of Payments Program.''

Canadian or Israeli End Products:

Line Item No.

_____

_____

_____

County of Origin

_____

_____

_____

(List as necessary)

(4) *Trade Agreements Certificate.* (Applies only if the clause at FAR 52.225–5, Trade Agreements, is included in this solicitation.)

(i) The offeror certifies that each end product, except those listed in paragraph (g)(4)(ii) of this provision, is a U.S. made, designated country, Caribbean Basin country, or NAFTA country end product, as defined in the clause of this solicitation entitled ''Trade Agreements.''

(ii) The offeror shall list as other end products those supplies that are not U.S. made, designated country, Caribbean Basin country, or NAFTA country end products.

Other end products:

Line Item No.

_____

_____

_____

Country of Origin

_____

_____

_____

(List as necessary)

(iii) Offers will be evaluated in accordance with the policies and procedures of FAR Part 25. For line items subject to the Trade Agreements Act, offers of U.S. made, designated country, Caribbean Basin country, or NAFTA country end products will be evaluated without regard to the restrictions of the Buy American Act or the Balance of Payments Program. Only offers of U.S. made, designated country, Caribbean Basin country, or NAFTA country end products will be considered for award unless the Contracting Officer determines that there are no offers for such products or that the offers for such products are insufficient to fulfill the requirements of this solicitation.

* * * * *

15. Section 52.212–5 is amended by revising the clause date; at the end of paragraph (a)(1) by removing ''; and''; at the end of paragraph (a)(2) by removing the period and inserting ''; and''; by adding paragraph (a)(3); and by revising paragraphs (b)(11) through (b)(16) to read as follows:

52.212–5 Contract Terms and Conditions Required to Implement Statutes or Executive Orders—Commercial Items.

* * * * *

Contract Terms and Conditions Required to Implement Statutes or Executive Orders—Commercial Items (Date)

(a) * * *

(3) 52.225–13, Restrictions on Certain Foreign Purchases (E.O.'s 12722, 12724, 13059, and 13067).

(b) * * *

____ (11) 52.225–1, Buy American Act—Balance of Payment Program—Supplies (41 U.S.C. 10a–10d).

____ (12)(i) 52.225–3, Buy American Act—North American Free Trade Agreement—Israeli Trade Act—Balance of Payments Program (41 U.S.C. 10a–10d, 19 U.S.C. 3301 note, 19 U.S.C. 2112 note).

____ (ii) Alternate I of 52.225–3.

____ (iii) Alternate II of 52.225–3.

____ (13) 52.225–5, Trade Agreements (19 U.S.C. 2501 *et seq.*, 19 U.S.C. 3301 note).

____ (14) 52.225–15, Sanctioned European Union Country End Products (E.O. 12849).

____ (15) 52.225–16, Sanctioned European Union Country Services (E.O. 12849).

____ (16) [Reserved]

* * * * *

16. Section 52.213–4 is amended by revising the date of the clause; and paragraph (a)(2)(i) and paragraph (b)(1)(viii) to read as follows:

52.213–4 Terms and Conditions—Simplified Acquisitions (Other Than Commercial Items).

* * * * *

Terms and Conditions—Simplified Acquisitions (Other Than Commercial Items) (Date)

(a) * * *

(2) * * *

(i) 52.225–13, Restrictions on Certain Foreign Purchases (DATE).

* * * * *

(b) * * *

(1) * * *

(viii) 52.225–1, Buy American Act—Balance of Payments Program—Supplies (DATE) (41 U.S.C. 10a–10d) (Applies to supplies, and services involving the furnishing of supplies, if the contract—

(A) Does not exceed $25,000; or

(B) Is set aside for small business concerns, regardless of dollar value).

* * * * *

17. Section 52.214–34 is amended by revising the introductory paragraph to read as follows:

52.214–34 Submission of Offers in the English Language.

As prescribed in 14.201–6(x), insert the following provision:

* * * * *

18. Section 52.214–35 is amended by revising the introductory text to read as follows:

52.214–35 Submission of Offers in U.S. Currency.

As prescribed in 14.201–6(y), insert the following provision:

* * * * *

19. Section 52.215–1 is amended by revising the date of the provision and paragraph (c)(5) to read as follows:

52.215–1 Instructions to Offerors—Competitive Acquisitions.

* * * * *

(c) * * *

(5) Proposals submitted in response to this solicitation shall be in English unless otherwise permitted by the solicitation and shall be in U.S. dollars, unless the provision at FAR 52.225–17, Evaluation of Foreign Currency Offers, is included in the solicitation.

* * * * *

20. Sections 52.225–1 through 52.225–17 are revised to read as follows:

Subpart 52.2—Text of Provisions and Clauses

Sec.

* * * * *

52.225–1 Buy American Act—Balance of Payments Program—Supplies.
52.225–2 Buy American Act—Balance of Payments Program Certificate.
52.225–3 Buy American Act—North American Free Trade Agreement—Israeli Trade Act—Balance of Payments Program.
52.225–4 Buy American Act—North American Free Trade Agreement—Israeli Trade Act—Balance of Payments Program Certificate.
52.225–5 Trade Agreements.
52.225–6 Trade Agreements Certificate.
52.225–7 Waiver of Buy American Act for Civil Aircraft and Related Articles.
52.225–8 Duty-Free Entry.
52.225–9 Buy American Act—Balance of Payments Program— Construction Materials.
52.225–10 Notice of Buy American Act/ Balance of Payments Program Requirement—Construction Materials.
52.225–11 Buy American Act—Balance of Payments Program— Construction Materials Under Trade Agreements.
52.225–12 Notice of Buy American Act/ Balance of Payments Program Requirement—Construction Materials Under Trade Agreements.
52.225–13 Restrictions on Certain Foreign Purchases.
52.225–14 Inconsistency Between English Version and Translation of Contract.
52.225–15 Sanctioned European Union Country End Products.
52.225–16 Sanctioned European Union Country Services.
52.225–17 Evaluation of Foreign Currency Offers.

* * * * *

Subpart 52.2—Text of Provisions and Clauses

52.225–1 Buy American Act—Balance of Payments Program—Supplies.

As prescribed in 25.1101(a)(1), insert the following clause:

Buy American Act—Balance of Payments Program—Supplies (Date)

(a) *Definitions.* As used in this clause—

Components means those articles, materials, and supplies incorporated directly into the end products.

Cost of components means—

(1) For components purchased by the Contractor, the acquisition cost, including transportation costs to the place of incorporation into the end product (whether or not such costs are paid to a domestic firm), and any applicable duty (whether or not a duty-free entry certificate is issued); or

(2) For components manufactured by the Contractor, all costs associated with the manufacture of the component, including transportation costs as described in paragraph (1) of this definition, plus allocable overhead costs, but excluding profit. Cost of components does not include any costs associated with the manufacture of the end product.

Domestic end product means—

(1) An unmanufactured end product mined or produced in the United States; or

(2) An end product manufactured in the United States, if the cost of its components mined, produced, or manufactured in the United States exceeds 50 percent of the cost of all its components. Components of foreign origin of the same class or kind as those that the agency determines are not mined, produced, or manufactured in sufficient and reasonably available commercial quantities of a satisfactory quality are treated as domestic. Scrap generated, collected, and prepared for processing in the United States is considered domestic.

End product means those articles, materials, and supplies to be acquired under the contract for public use.

Foreign end product means an end product other than a domestic end product.

(b) The Buy American Act (41 U.S.C. 10a–10d) provides a preference for domestic end products for supplies acquired for use in the United States. The Balance of Payments Program provides a preference for domestic end products for supplies acquired for use outside the United States.

(c) Offerors may obtain from the Contracting Officer a list of foreign articles that will be treated as domestic for this contract.

(d) The Contractor shall deliver only domestic end products except to the extent that it specified delivery of foreign end products in the provision of the solicitation entitled ''Buy American Act—Balance of Payments Program Certificate.''

(End of clause)

52.225–2 Buy American Act—Balance of Payments Program Certificate.

As prescribed in 25.1101(a)(2), insert the following provision:

Buy American Act—Balance of Payments Program Certificate (Date)

(a) The offeror certifies that each end product, except those listed in paragraph (b) of this provision, is a domestic end product as defined in the clause of this solicitation entitled ''Buy American Act—Balance of Payments Program—Supplies'' and that components of unknown origin have been considered to have been mined, produced, or manufactured outside the United States. The offeror shall list as foreign end products those end products manufactured in the United States that do not qualify as domestic end products.

(b) Foreign End Products:

Line Item No.	*Country of Origin*
_____	_____
_____	_____
_____	_____

(List as necessary)

(c) Offers will be evaluated in accordance with the policies and procedures of Part 25 of the Federal Acquisition Regulation.

(End of provision)

52.225–3 Buy American Act—North American Free Trade Agreement—Israeli Trade Act—Balance of Payments Program.

As prescribed in 25.1101(b)(1)(i), insert the following clause:

Buy American Act—North American Free Trade Agreement—Israeli Trade Act—Balance of Payments Program (Date)

(a) *Definitions.* As used in this clause—

Components means those articles, materials, and supplies incorporated directly into the end products.

Cost of components means—

(1) For components purchased by the Contractor, the acquisition cost, including transportation costs to the place of incorporation into the end product (whether or not such costs are paid to a domestic firm), and any applicable duty (whether or not a duty-free entry certificate is issued); or

(2) For components manufactured by the Contractor, all costs associated with the manufacture of the component, including transportation costs as described in paragraph (1) of this definition, plus allocable overhead costs, but excluding profit. Cost of components does not include any costs associated with the manufacture of the end product.

Domestic end product means—

(1) An unmanufactured end product mined or produced in the United States; or

(2) An end product manufactured in the United States, if the cost of its components mined, produced, or manufactured in the United States exceeds 50 percent of the cost of all its components. Components of foreign origin of the same class or kind as those that the agency determines are not mined, produced, or manufactured in sufficient and reasonably available commercial quantities of a satisfactory quality are treated as domestic. Scrap generated, collected, and prepared for processing in the United States is considered domestic.

End product means those articles, materials, and supplies to be acquired under the contract for public use.

Foreign end product means an end product other than a domestic end product.

Israeli end product means an article that—

(1) Is wholly the growth, product, or manufacture of Israel; or

(2) In the case of an article that consists in whole or in part of materials from another country, has been substantially transformed in Israel into a new and different article of commerce with a name, character, or use distinct from that of the article or articles from which it was transformed.

North American Free Trade Agreement (NAFTA) country means Canada or Mexico.

NAFTA country end product means an article that—

(1) Is wholly the growth, product, or manufacture of a NAFTA country; or

(2) In the case of an article that consists in whole or in part of materials from another country, has been substantially transformed

in a NAFTA country into a new and different article of commerce with a name, character, or use distinct from that of the article or articles from which it was transformed. The term refers to a product offered for purchase under a supply contract, but for purposes of calculating the value of the end product includes services (except transportation services) incidental to the article, provided that the value of those incidental services does not exceed that of the article itself.

(b) *Components of foreign origin.* Offerors may obtain from the Contracting Officer a list of foreign articles that will be treated as domestic for this contract.

(c) *Implementation.* This clause implements the Buy American Act (41 U.S.C. 10a–10d), the North American Free Trade Agreement Implementation Act (NAFTA) (19 U.S.C. 3301 note), the Israeli Free Trade Area Implementation Act of 1985 (Israeli Trade Act) (19 U.S.C. 2112 note), and the Balance of Payments Program by providing a preference for domestic end products, except for certain foreign end products that are NAFTA country end products or Israeli end products.

(d) *Delivery of end products.* The Contracting Officer has determined that NAFTA and the Israeli Trade Act apply to this acquisition. Unless otherwise specified, these trade agreements apply to all items in the Schedule. The Contractor shall deliver under this contract only domestic end products except to the extent that, in its offer, it specified delivery of foreign end products in the provision entitled ''Buy American Act—North American Free Trade Agreement—Israeli Trade Act—Balance of Payments Program Certificate.'' An offer specifying that a NAFTA country end product or an Israeli end product will be supplied requires the Contractor to supply a NAFTA country end product, an Israeli end product or, at the Contractor's option, a domestic end product.

(End of clause)

Alternate I (DATE). As prescribed in 25.1101(b)(1)(ii), add the following definition to paragraph (a) of the basic clause, and substitute the following paragraph (d) for paragraph (d) of the basic clause:

Canadian end product means an article that—

(1) Is wholly the growth, product, or manufacture of Canada; or

(2) In the case of an article that consists in whole or in part of materials from another country, has been substantially transformed in Canada into a new and different article of commerce with a name, character, or use distinct from that of the article or articles from which it was transformed. The term refers to a product offered for purchase under a supply contract, but for purposes of calculating the value of the end product includes services (except transportation services) incidental to the article; *provided* that the value of those incidental services does not exceed that of the article itself.

(d) *Delivery of end products.* The Contracting Officer has determined that NAFTA applies to this acquisition. Unless otherwise specified, NAFTA applies to all items in the Schedule. The Contractor shall deliver under this contract only domestic end products except to the extent that, in its offer, it specified delivery of foreign end products in the provision entitled ''Buy American Act—North American Free Trade Agreement—Israeli Trade Act—Balance of Payment Program Certificate.'' An offer specifying that a Canadian end product will be supplied requires the Contractor to supply a Canadian end product or, at the Contractor's option, a domestic end product.

Alternate II (DATE). As prescribed in 25.1101(b)(1)(iii), add the following definition to paragraph (a) of the basic clause, and substitute the following paragraph (d) for paragraph (d) of the basic clause:

Canadian end product means an article that—

(1) Is wholly the growth, product, or manufacture of Canada; or

(2) In the case of an article that consists in whole or in part of materials from another country, has been substantially transformed in Canada into a new and different article of commerce with a name, character, or use distinct from that of the article or articles from which it was transformed. The term refers to a product offered for purchase under a supply contract, but for purposes of calculating the value of the end product includes services (except transportation services) incidental to the article, provided that the value of those incidental services does not exceed that of the article itself.

(d) *Delivery of end products.* The Contracting Officer has determined that NAFTA and the Israeli Trade Act apply to this acquisition. Unless otherwise specified, these trade agreements apply to all items in the Schedule. The Contractor shall deliver under this contract only domestic end products except to the extent that, in its offer, it specified delivery of foreign end products in the provision entitled ''Buy American Act—North American Free Trade Agreement—Israeli Trade Act—Balance of Payment Program Certificate.'' An offer specifying that a Canadian end product or an Israeli end product will be supplied requires the Contractor to supply a Canadian end product, an Israeli end product or, at the Contractor's option, a domestic end product.

52.225–4 Buy American Act—North American Free Trade Agreement—Israeli Trade Act—Balance of Payments Program Certificate.

As prescribed in 25.1101(b)(2)(i), insert the following provision:

Buy American Act—North American Free Trade Agreement—Israeli Trade Act—Balance of Payments Program Certificate (Date)

(a) The offeror certifies that each end product, except those listed in paragraph (b) or (c) of this provision, is a domestic end product (as defined in the clause of this solicitation entitled ''Buy American Act—North American Free Trade Agreement—Israeli Trade Act—Balance of Payments Program'') and that components of unknown origin have been considered to have been mined, produced, or manufactured outside the United States.

(b) The offeror certifies that the following supplies are NAFTA country end products or Israeli end products as defined in the clause of this solicitation entitled ''Buy American Act—North American Free Trade Agreement—Israeli Trade Act—Balance of Payments Program.''

NAFTA Country or Israeli End Products:

Line Item No.

_____

_____

_____

Country of Origin

_____

_____

_____

(List as necessary)

(c) The offeror shall list those supplies that are foreign end products (other than those listed in paragraph (b) of this provision) as defined in the clause of this solicitation entitled ''Buy American Act—North American Free Trade Agreement—Israeli Trade Act—Balance of Payments Program.'' The offeror shall list as other foreign end products those end products manufactured in the United States that do not qualify as domestic end products.

Other Foreign End Products:

Line Item No.

_____

_____

_____

Country of Origin

_____

_____

_____

(List as necessary)

(d) Offers will be evaluated in accordance with the policies and procedures of Part 25 of the Federal Acquisition Regulation.

(End of provision)

Alternate I (DATE). As prescribed in 25.1101(b)(2)(ii), substitute the following paragraph (b) for paragraph (b) of the basic provision:

(b) The offeror certifies that the following supplies are Canadian end products as defined in the clause of this solicitation entitled ''Buy American Act—North American Free Trade Agreement—Israeli Trade Act—Balance of Payments Program.''

Canadian End Products:

Line Item No.

_____

_____

_____

(List as necessary)

Alternate II (DATE). As prescribed in 25.1101(b)(2)(iii), substitute the following paragraph (b) for paragraph (b) of the basic provision:

(b) The offeror certifies that the following supplies are Canadian end products or Israeli end products as defined in the clause of this solicitation entitled ''Buy American Act—North American Free Trade Agreement—Israeli Trade Act—Balance of Payments Program.''

Canadian or Israeli End Products:

Line Item No.

_____

_____

_____

Country of Origin

_____

_____

_____

(List as necessary)

52.225–5 Trade Agreements.

As prescribed in 25.1101(c)(1), insert the following clause:

Trade Agreements (Date)

(a) *Definitions.* As used in this clause—

Caribbean Basin country means any of the following countries: Antigua and Barbuda, Aruba, Bahamas, Barbados, Belize, British Virgin Islands, Costa Rica, Dominica, Dominican Republic, El Salvador, Grenada, Guatemala, Guyana, Haiti, Honduras, Jamaica, Montserrat, Netherlands Antilles, Nicaragua, Panama, St. Kitts and Nevis, St. Lucia, St. Vincent and the Grenadines, Trinidad and Tobago.

Caribbean Basin country end product means an article that—

(1) Is wholly the growth, product, or manufacture of a Caribbean Basin country; or

(2) In the case of an article that consists in whole or in part of materials from another country, has been substantially transformed in a Caribbean Basin country into a new and different article of commerce with a name, character, or use distinct from that of the article or articles from which it was transformed. The term refers to a product offered for purchase under a supply contract, but for purposes of calculating the value of the end product includes services (except transportation services) incidental to the article, provided that the value of those incidental services does not exceed that of the article itself. The term excludes products that are excluded from duty-free treatment for Caribbean countries under 19 U.S.C. 2703(b), which presently are—

(i) Textiles and apparel articles that are subject to textile agreements;

(ii) Footwear, handbags, luggage, flat goods, work gloves, and leather wearing apparel not designated as eligible articles for the purpose of the Generalized System of Preferences under Title V of the Trade Act of 1974;

(iii) Tuna, prepared or preserved in any manner in airtight containers;

(iv) Petroleum, or any product derived from petroleum; and

(v) Watches and watch parts (including cases, bracelets, and straps) of whatever type including, but not limited to, mechanical, quartz digital, or quartz analog, if such watches or watch parts contain any material that is the product of any country to which the Harmonized Tariff Schedule of the United States (HTSUS) column 2 rates of duty apply.

Designated country means any of the following countries:

Aruba
Austria
Bangladesh
Belgium
Benin
Bhutan
Botswana
Burkina Faso
Burundi
Canada
Cape Verde
Central African Republic
Chad
Comoros
Denmark
Djibouti
Equatorial Guinea
Finland
France
Gambia
Germany
Greece
Guinea
Guinea-Bissau
Haiti
Hong Kong
Ireland
Israel
Italy
Japan
Kiribati
Korea, Republic of
Lesotho
Liechtenstein
Luxembourg
Malawi
Maldives
Mali
Mozambique
Nepal
Netherlands
Niger
Norway
Portugal
Rwanda
Sao Tome and Principe
Sierra Leone
Singapore
Somalia
Spain
Sweden
Switzerland
Tanzania U.R.
Togo
Tuvalu
Uganda
United Kingdom
Vanuatu
Western Samoa
Yemen

Designated country end product means an article that—

(1) Is wholly the growth, product, or manufacture of a designated country; or

(2) In the case of an article that consists in whole or in part of materials from another country, has been substantially transformed in a designated country into a new and different article of commerce with a name, character, or use distinct from that of the article or articles from which it was transformed. The term refers to a product offered for purchase under a supply contract, but for purposes of calculating the value of the end product includes services (except transportation services) incidental to the article, provided that the value of those incidental services does not exceed that of the article itself.

End product means those articles, materials, and supplies to be acquired under the contract for public use.

North American Free Trade Agreement (NAFTA) country means Canada or Mexico.

NAFTA country end product means an article that—

(1) Is wholly the growth, product, or manufacture of a NAFTA country; or

(2) In the case of an article that consists in whole or in part of materials from another country, has been substantially transformed in a NAFTA country into a new and different article of commerce with a name, character, or use distinct from that of the article or articles from which it was transformed. The term refers to a product offered for purchase under a supply contract, but for purposes of calculating the value of the end product includes services (except transportation services) incidental to the article, provided that the value of those incidental services does not exceed that of the article itself.

U.S. made end product means an article that has been manufactured in the United States or that has been substantially transformed in the United States into a new and different article of commerce with a name, character, or use distinct from that of the article or articles from which it was transformed.

(b) *Implementation.* This clause implements the Trade Agreements Act (19 U.S.C. 2501 *et seq.*) and the North American Free Trade Agreement Implementation Act of 1993 (NAFTA) (19 U.S.C. 3301 note), by restricting the acquisition of end products that are not U.S. made, designated country, Caribbean Basin country, or NAFTA country end products.

(c) *Delivery of end products.* The Contracting Officer has determined that the Trade Agreements Act and NAFTA apply to this acquisition. Unless otherwise specified, these trade agreements apply to all items in the Schedule. The Contractor shall deliver under this contract only U.S. made, designated country, Caribbean Basin country, or NAFTA country end products except to the extent that, in its offer, it specified delivery of other end products in the provision entitled ''Trade Agreements Certificate.''

(End of clause)

52.225–6 Trade Agreements Certificate.

As prescribed in 25.1101(c)(2), insert the following provision:

Trade Agreements Certificate (Date)

(a) The offeror certifies that each end product, except those listed in paragraph (b) of this provision, is a U.S. made, designated country, Caribbean Basin country, or NAFTA country end product, as defined in the clause of this solicitation entitled ''Trade Agreements.''

(b) The offeror shall list as other end products those supplies that are not U.S. made, designated country, Caribbean Basin country, or NAFTA country end products.

Other End Products:

Line Item No.

_____

_____

_____

Country of Origin

_____

_____

_____

(List as necessary)

(c) Offers will be evaluated in accordance with the policies and procedures of Part 25 of the Federal Acquisition Regulation. For line items subject to the Trade Agreements Act, offers of U.S. made, designated country, Caribbean Basin country, or NAFTA country end products will be evaluated without regard to the restrictions of the Buy American Act or the Balance of Payments Program. Only offers of U.S. made, designated country, Caribbean Basin country, or NAFTA country end products will be considered for award unless the Contracting Officer determines that there are no offers for such products or that the offers for such products are insufficient to fulfill the requirements of this solicitation.

(End of provision)

52.225–7 Waiver of Buy American Act for Civil Aircraft and Related Articles.

As prescribed in 25.1101(d), insert the following provision:

Waiver of Buy American Act for Civil Aircraft and Related Articles (Date)

(a) *Civil aircraft and related articles,* as used in this provision, means—

(1) All aircraft other than aircraft to be purchased for use by the Department of Defense or the U.S. Coast Guard;

(2) The engines (and parts and components for incorporation into the engines) of these aircraft;

(3) Any other parts, components, and subassemblies for incorporation into the aircraft; and

(4) Any ground flight simulators, and parts and components of these simulators, for use with respect to the aircraft, whether to be used as original or replacement equipment in the manufacture, repair, maintenance, rebuilding, modification, or conversion of the aircraft, and without regard to whether the aircraft or articles receive duty-free treatment under section 601(a)(2) of the Trade Agreements Act.

(b) The U.S. Trade Representative has waived the Buy American Act for acquisitions of civil aircraft and related articles from countries that are parties to the Agreement on Trade in Civil Aircraft. Those countries are Austria, Belgium, Canada, Denmark, Finland, France, Germany, Greece, Ireland, Italy, Japan, Luxembourg, the Netherlands, Norway, Portugal, Romania, Spain, Sweden, Switzerland, and the United Kingdom.

(c) For the purpose of this waiver, an article is a product of a country only if—

(1) It is wholly the growth, product, or manufacture of that country; or

(2) In the case of an article that consists in whole or in part of materials from another country, it has been substantially transformed into a new and different article of commerce with a name, character, or use distinct from that of the article or articles from which it was transformed.

(d) The waiver is subject to modification or withdrawal by the U.S. Trade Representative.

(End of provision)

52.225–8 Duty-Free Entry.

As prescribed in 25.1101(e), insert the following clause:

Duty-Free Entry (Date)

(a) Except as otherwise approved by the Contracting Officer, the Contractor shall not include in the contract price any amount for duties on supplies specifically identified in the Schedule to be accorded duty-free entry.

(b) Except as provided in paragraph (c) of this clause, or elsewhere in this contract, the following procedures apply to supplies not identified in the Schedule to be accorded duty-free entry:

(1) The Contractor shall notify the Contracting Officer, in writing, of any purchase of foreign supplies (including, without limitation, raw materials, components, and intermediate assemblies) in excess of $10,000 that are to be imported into the customs territory of the United States for delivery to the Government under this contract, either as end products for incorporation into end products. The notice shall be furnished to the Contracting Officer at least 20 calendar days before the importation and shall identify the—

(i) Foreign supplies;

(ii) Estimated amount of duty; and

(iii) Country of origin.

(2) The Contracting Officer shall determine whether any of these supplies should be accorded duty-free entry and shall notify the Contractor within 10 calendar days after receipt of the Contractor's notification.

(3) Except as otherwise approved by the Contracting Officer, the contract price shall be reduced by (or the allowable cost shall not include) the amount of duty that would be payable if the supplies were not entered duty-free.

(c) Notification under paragraph (b) of this clause is not required for purchases of foreign supplies if—

(1) The supplies are identical in nature to items purchased by the Contractor or any subcontractor in connection with its commercial business; and

(2) Segregation of these supplies to ensure use only on Government contracts containing duty-free entry provisions is not economical or feasible.

(d) The Contractor shall claim duty-free entry only for supplies to be delivered to the Government under this contract, either as end products or incorporated into end products, and shall pay duty on supplies, or any portion of them, other than scrap, salvage, or competitive sale authorized by the Contracting Officer, diverted to non-Governmental use.

(e) The Government shall execute any required duty-free entry certificates for supplies to be accorded duty-free entry and shall assist the Contractor in obtaining duty-free entry for these supplies.

(f) Shipping documents for supplies to be accorded duty-free entry shall consign the shipments to the contracting agency in care of the Contractor and shall include the—

(1) Delivery address of the Contractor (or contracting agency, if appropriate);

(2) Government prime contract number;

(3) Identification of carrier;

(4) Notation ''*UNITED STATES GOVERNMENT, _____ agency _____*, Duty-free entry to be claimed pursuant to Item No(s) _____ from Tariff Schedules _____, Harmonized Tariff Schedules of the United States. Upon arrival of shipment at port of entry, District Director of Customs, please release shipment under 19 CFR 142 and notify [*cognizant contract administration office*] for execution of Customs Forms 7501 and 7501–A and any required duty-free entry certificates;''

(5) Gross weight in pounds (if freight is based on space tonnage, state cubic feet in addition to gross shipping weight); and

(6) Estimated value in United States dollars.

(g) The Contractor shall instruct the foreign supplier to—

(1) Consign the shipment as specified in paragraph (f) of this clause;

(2) Mark all packages with the words ''UNITED STATES GOVERNMENT'' and the title of the contracting agency; and

(3) Include with the shipment at least two copies of the bill of lading (or other shipping document) for use by the District Director of Customs at the port of entry.

(h) The Contractor shall provide written notice to the cognizant contract administration office immediately after notification by the Contracting Officer that duty-free entry will be accorded foreign supplies or, for duty-free supplies identified in the Schedule, upon award by the Contractor to the overseas supplier. The notice shall identify the—

(1) Foreign supplies;

(2) Country of origin;

(3) Contract number; and

(4) Scheduled delivery date(s).

(i) The Contractor shall include the substance of this clause in any subcontract if—

(1) Supplies identified in the Schedule to be accorded duty-free entry will be imported into the customs territory of the United States; or

(2) Other foreign supplies in excess of $10,000 may be imported into the customs territory of the United States.

(End of clause)

52.225–9 Buy American Act—Balance of Payments Program—Construction Materials.

As prescribed in 25.1102(a), insert the following clause:

Buy American Act—Balance of Payments Program—Construction Materials (Date)

(a) *Definitions.* As used in this clause—

Components means those articles, materials, and supplies incorporated directly into construction materials.

Construction material means an article, material, or supply brought to the construction site by the Contractor or subcontractor for incorporation into the building or work. The term also includes an item brought to the site preassembled from articles, materials, or supplies. However,

emergency life safety systems, such as emergency lighting, fire alarm, and audio evacuation systems, that are discrete systems incorporated into a public building or work and that are produced as complete systems, shall be evaluated as a single and distinct construction material regardless of when or how the individual parts or components of such systems are delivered to the construction site.

Cost of components means—

(1) For components purchased by the Contractor, the acquisition cost, including transportation costs to the place of incorporation into the end product (whether or not such costs are paid to a domestic firm), and any applicable duty (whether or not a duty-free entry certificate is issued); or

(2) For components manufactured by the Contractor, all costs associated with the manufacture of the component, including transportation costs as described in paragraph (1) of this definition, plus allocable overhead costs, but excluding profit. Cost of components does not include any costs associated with the manufacture of the end product.

Domestic construction material means—

(1) An unmanufactured construction material mined or produced in the United States; or

(2) A construction material manufactured in the United States, if the cost of its components mined, produced, or manufactured in the United States exceeds 50 percent of the cost of all its components. Components of foreign origin of the same class or kind for which nonavailability determinations have been made are treated as domestic.

Foreign construction material means a construction material other than a domestic construction material.

(b) *Domestic preference.* (1) This clause implements the Buy American Act (41 U.S.C. 10a–10d) and the Balance of Payments Program by providing a preference for domestic construction material. Only domestic construction material shall be used in performing this contract, except as provided in paragraphs (b)(2) and (b)(3) of this clause.

(2) This requirement does not apply to the construction material or components listed by the Government as follows:

_____

[*Contracting Officer to list applicable excepted materials or indicate ''none''*]

(3) Other foreign construction material may be added to the list in paragraph (b)(2) of this clause if the Government determines that—

(i) The cost of domestic construction material would be unreasonable. The cost of a particular domestic construction material subject to the requirements of the Buy American Act shall be determined to be unreasonable when the cost of such material exceeds the cost of foreign material by more than 6 percent. For determination of unreasonable cost under the Balance of Payments Program, a factor of 50 percent shall be used;

(ii) The application of the restriction of the Buy American Act or Balance of Payments Program to a particular construction material would be impracticable or inconsistent with the public interest; or

(iii) The construction material is not mined, produced, or manufactured in the United States in sufficient and reasonably available commercial quantities of a satisfactory quality.

(c) *Request for determination of inapplicability of the Buy American Act or Balance of Payments Program.* (1)(i) Any Contractor request to use foreign construction material in accordance with paragraph (b)(3) of this clause shall include adequate information for Government evaluation of the request, including a description of the foreign and domestic construction materials, unit of measure, quantity, price, time of delivery or availability, location of the construction project, name and address of the proposed supplier, and a detailed justification of the reason for use of foreign construction materials cited in accordance with paragraph (b)(3) of this clause. A request based on unreasonable cost shall include a reasonable survey of the market and a completed price comparison table in the format in paragraph (d) of this clause. The price of construction material shall include all delivery costs to the construction site and any applicable duty (whether or not a duty-free certificate may be issued).

(ii) Any Contractor request for a determination submitted after contract award shall explain why the determination could not have been requested before contract award or why the need for such determination otherwise was not reasonably foreseeable. If the Contractor does not submit a satisfactory explanation, the Government need not make a determination.

(2) If the Government determines after contract award that an exception to the Buy American Act or Balance of Payments Program applies, the contract shall be modified to allow use of the foreign construction material, and adequate consideration shall be negotiated. However, when the basis for the exception is the unreasonable price of a domestic construction material, adequate consideration shall not be less than the differential established in paragraph (b)(3)(i) of this clause.

(3) Unless the Government determines that an exception to the Buy American Act or Balance of Payments Program applies, use of foreign construction material shall be considered noncompliant with the Buy American Act or Balance of Payments Program.

(d) *Data to be supplied.* To permit evaluation of requests under paragraph (c) of this clause based on unreasonable cost, the Contractor shall include the following information and any applicable supporting data based on the survey of suppliers:

FOREIGN AND DOMESTIC CONSTRUCTION MATERIALS PRICE COMPARISON

Construction material description	Unit of measure	Quantity	Price (dollars)*
Item 1:			
Foreign construction material	.....	.....	.....
Domestic construction material	.....	.....	.....
Item 2:			
Foreign construction material	.....	.....	.....
Domestic construction material	.....	.....	.....

List name, address, telephone number, and contact for suppliers surveyed. Attach copy of response; if oral, attach summary.
Include other applicable supporting information.
* Include all delivery costs to the construction site and any applicable duty (whether or not a duty-free entry certificate is issued).

(End of clause)

52.225–10 Notice of Buy American Act/ Balance of Payments Program Requirement—Construction Materials.

As prescribed in 25.1102(b)(1), insert the following provision:

Notice of Buy American Act/Balance of Payments Program Requirement—Construction Materials (Date)

(a) *Definitions. Construction material, domestic construction material,* and *foreign construction material,* as used in this provision, are defined in the clause of this solicitation entitled ''Buy American Act—Balance of Payments Program—Construction Materials'' (Federal Acquisition Regulation (FAR) clause 52.225–9).

(b) *Requests for determinations of inapplicability.* An offeror requesting a determination regarding the inapplicability of the Buy American Act or Balance of Payments Program should submit the request to the Contracting Officer in time to allow a determination before submission of offers. The information and applicable supporting data required by paragraphs (c) and (d) of the clause at FAR 52.225–9 shall be included in the request. If an offeror has not requested a

determination regarding the inapplicability of the Buy American Act or Balance of Payments Program before submitting its offer, or has not received a response to a previous request, the information and supporting data shall be included in the offer.

(c) *Evaluation of offers.* (1) The Government will evaluate an offer requesting exception to the requirements of the Buy American Act or Balance of Payments Program, based on claimed unreasonable cost of domestic construction material, by adding to the offered price the appropriate percentage of the cost of such foreign construction material, as specified in paragraph (b)(3)(i) of the clause at FAR 52.225–9.

(2) If evaluation results in a tie between an offeror that has requested the substitution of foreign construction material based on unreasonable cost and an offeror that has not requested such an exception, the Contracting Officer shall award to the offeror that has not requested an exception based on unreasonable cost.

(d) *Alternate offers.* (1) When an offer includes foreign construction material not listed by the Government in this solicitation in paragraph (b)(2) of the clause at FAR 52.225–9, the offeror also may submit an alternate offer based on use of equivalent domestic construction material.

(2) If an alternate offer is submitted, the offeror shall submit a separate Standard Form 1442 for the alternate offer, and a separate price comparison table prepared in accordance with paragraphs (c) and (d) of the clause at FAR 52.225–9 for the offer that is based on the use of any foreign construction material for which the Government has not yet determined an exception to apply.

(3) If the Government determines that a particular exception requested in accordance with paragraph (c) of the clause at FAR 52.225–9 does not apply, the Government will evaluate only those offers based on use of the equivalent domestic construction material, and the offeror shall be required to furnish such domestic construction material. An offer based on use of the foreign construction material for which an exception was requested—

(i) Shall be rejected as nonresponsive if this acquisition is conducted by sealed bidding; or

(ii) May be accepted if revised during negotiations.

(End of provision)

Alternate I (DATE). As prescribed in 25.1102(b)(2), substitute the following paragraph (b) for paragraph (b) of the basic provision:

(b) *Requests for determinations of inapplicability.* An offeror requesting a determination regarding the inapplicability of the Buy American Act or Balance of Payments Program shall submit the request with its offer, including the information and applicable supporting data required by paragraphs (c) and (d) of the clause at FAR 52.225–9.

52.225–11 Buy American Act—Balance of Payments Program—Construction Materials Under Trade Agreements.

As prescribed in 25.1102(c)(1), insert the following clause:

Buy American Act—Balance of Payments Program—Construction Materials Under Trade Agreements (Date)

(a) *Definitions.* As used in this clause—

Components means those articles, materials, and supplies incorporated directly into construction materials.

Construction material means an article, material, or supply brought to the construction site by the Contractor or subcontractor for incorporation into the building or work. The term also includes an item brought to the site preassembled from articles, materials, or supplies. However, emergency life safety systems, such as emergency lighting, fire alarm, and audio evacuation systems, that are discrete systems incorporated into a public building or work and that are produced as complete systems, shall be evaluated as a single and distinct construction material regardless of when or how the individual parts or components of such systems are delivered to the construction site.

Cost of components means—

(1) For components purchased by the Contractor, the acquisition cost, including transportation costs to the place of incorporation into the end product (whether or not such costs are paid to a domestic firm), and any applicable duty (whether or not a duty-free entry certificate is issued); or

(2) For components manufactured by the Contractor, all costs associated with the manufacture of the component, including transportation costs as described in paragraph (1) of this definition, plus allocable overhead costs, but excluding profit. Cost of components does not include any costs associated with the manufacture of the end product.

Designated country means any of the following countries:

Aruba
Austria
Bangladesh
Belgium
Benin
Bhutan
Botswana
Burkina Faso
Burundi
Canada
Cape Verde
Central African Republic
Chad
Comoros
Denmark
Djibouti
Equatorial Guinea
Finland
France
Gambia
Germany
Greece
Guinea
Guinea-Bissau
Haiti
Hong Kong
Ireland
Israel
Italy
Japan
Kiribati
Korea,
Republic of
Lesotho
Liechtenstein
Luxembourg
Malawi
Maldives
Mali
Mozambique
Nepal
Netherlands
Niger
Norway
Portugal
Rwanda
Sao Tome and Principe
Sierra Leone
Singapore
Somalia
Spain
Sweden
Switzerland
Tanzania U.R.
Togo
Tuvalu
Uganda
United Kingdom
Vanuatu
Western Samoa
Yemen

Designated country construction material means a construction material that—

(1) Is wholly the growth, product, or manufacture of a designated country; or

(2) In the case of a construction material that consists in whole or in part of materials from another country, has been substantially transformed in a designated country into a new and different construction material distinct from the materials from which it was transformed.

Domestic construction material means—

(1) An unmanufactured construction material mined or produced in the United States; or

(2) A construction material manufactured in the United States, if the cost of its components mined, produced, or manufactured in the United States exceeds 50 percent of the cost of all its components. Components of foreign origin of the same class or kind for which nonavailability determinations have been made are treated as domestic.

Foreign construction material means a construction material other than a domestic construction material.

North American Free Trade Agreement (NAFTA) country means Canada or Mexico.

NAFTA country construction material means a construction material that—

(1) Is wholly the growth, product, or manufacture of a NAFTA country; or

(2) In the case of a construction material that consists in whole or in part of materials from another country, has been substantially transformed in a NAFTA country into a new and different construction material distinct from the materials from which it was transformed.

(b) *Construction materials.* (1) This clause implements the Buy American Act (41 U.S.C.

10a–10d) and the Balance of Payments Program by providing a preference for domestic construction material. In addition, the Contracting Officer has determined that the Trade Agreements Act and the North American Free Trade Agreement (NAFTA) apply to this acquisition. Therefore, the Buy American Act and Balance of Payments Program restrictions are waived for designated country and NAFTA country construction materials.

(2) Only domestic, designated country, or NAFTA country construction material shall be used in performing this contract, except as provided in paragraphs (b)(3) and (b)(4) of this clause.

(3) The requirement in paragraph (b)(2) of this clause does not apply to the construction materials or components listed by the Government as follows:

Contract _____

[*Contracting Officer to list applicable excepted materials or indicate ''none''*]

(4) Other foreign construction material may be added to the list in paragraph (b)(3) of this clause if the Government determines that—

(i) The cost of domestic construction material would be unreasonable. The cost of a particular domestic construction material subject to the restrictions of the Buy American Act shall be determined to be unreasonable when the cost of such material exceeds the cost of foreign material by more than 6 percent. For determination of unreasonable cost under the Balance of Payments Program, a factor of 50 percent shall be used;

(ii) The application of the restriction of the Buy American Act or Balance of Payments Program to a particular construction material would be impracticable or inconsistent with the public interest; or

(iii) The construction material is not mined, produced, or manufactured in the United States in sufficient and reasonably available commercial quantities of a satisfactory quality.

(c) *Request for determination of inapplicability of the Buy American Act or Balance of Payments Program.* (1)(i) Any Contractor request to use foreign construction material in accordance with paragraph (b)(4) of this clause shall include adequate information for Government evaluation of the request, including a description of the foreign and domestic construction materials, unit of measure, quantity, price, time of delivery or availability, location of the construction project, name and address of the proposed supplier, and a detailed justification of the reason for use of foreign construction materials cited in accordance with paragraph (b)(4) of this clause. A request based on unreasonable cost shall include a reasonable survey of the market and a completed price comparison table in the format in paragraph (d) of this clause. The price of construction material shall include all delivery costs to the construction site and any applicable duty (whether or not a duty-free certificate may be issued).

(ii) Any Contractor request for a determination submitted after contract award shall explain why the determination could not have been requested before contract award or why the need for such determination otherwise was not reasonably foreseeable. If the Contractor does not submit a satisfactory explanation, the Government need not make a determination .

(2) If the Government determines after contract award that an exception to the Buy American Act or Balance of Payments Program applies, the contract shall be modified to allow use of the foreign construction material, and adequate consideration shall be negotiated. However, when the basis for the exception is the unreasonable price of a domestic construction material, adequate consideration shall not be less than the differential established in paragraph (b)(4)(i) of this clause.

(3) Unless the Government determines that an exception to the Buy American Act or Balance of Payments Program applies, use of foreign construction material shall be considered noncompliant with the Buy American Act or Balance of Payments Program.

(d) *Data to be supplied.* To permit evaluation of requests under paragraph (c) of this clause based on unreasonable cost, the Contractor shall include the following information and any applicable supporting data based on the survey of suppliers:

FOREIGN AND DOMESTIC CONSTRUCTION MATERIALS PRICE COMPARISON

Construction material description	Unit of measure	Quantity	Price (dollars)*
Item 1:			
Foreign construction material	.....	.....	.....
Domestic construction material	.....	.....	.....
Item 2:			
Foreign construction material	.....	.....	.....
Domestic construction material	.....	.....	.....

List name, address, telephone number, and contact for suppliers surveyed. Attach copy of response; if oral, attach summary.
Include other applicable supporting information.
*Include all delivery costs to the construction site and any applicable duty (whether or not a duty-free entry certificate is issued).

(End of clause)

Alternate I (DATE). As prescribed in 25.1102(c)(2), substitute the following paragraphs (b)(1) and (b)(2) for paragraphs (b)(1) and (b)(2) of the basic clause:

(b) *Construction materials.* (1) This clause implements the Buy American Act (41 U.S.C. 10a–10d) and the Balance of Payments Program by providing a preference for domestic construction material. In addition, the Contracting Officer has determined that the North American Free Trade Agreement (NAFTA) applies to this acquisition. Therefore, the Buy American Act and Balance of Payments Program restrictions are waived for NAFTA country construction materials .

(2) Only domestic or NAFTA country construction material shall be used in performing this contract, except as provided in paragraphs (b)(3) and (b)(4) of this clause.

52.225–12 Notice of Buy American Act/ Balance of Payments Program Requirement—Construction Materials Under Trade Agreements.

As prescribed in 25.1102(d)(1), insert the following provision:

Notice of Buy American Act/Balance of Payments Program Requirement—Construction Materials Under Trade Agreements (Date)

(a) *Definitions. Construction material, designated country construction material, domestic construction material, foreign construction material,* and *NAFTA country construction material,* as used in this provision, are defined in the clause of this solicitation entitled ''Buy American Act—Balance of Payments Program—Construction Materials Under Trade Agreements'' (Federal Acquisition Regulation (FAR) clause 52.225–11).

(b) *Requests for determination of inapplicability.* An offeror requesting a determination regarding the inapplicability of the Buy American Act or Balance of Payments Program should submit the request to the Contracting Officer in time to allow a determination before submission of offers. The information and applicable supporting data required by paragraphs (c) and (d) of the clause at FAR 52.225–11 shall be included in the request. If an offeror has not requested a determination regarding the inapplicability of the Buy American Act or Balance of Payments Program before submitting its offer, or has not received a response to a previous request, the information and supporting data shall be included in the offer.

(c) *Evaluation of offers.* (1) The Government will evaluate an offer requesting exception to the requirements of the Buy American Act or Balance of Payments Program, based on claimed unreasonable cost of domestic construction material, by adding

to the offered price the appropriate percentage of the cost of such foreign construction material, as specified in paragraph (b)(4)(i) of the clause at FAR 52.225–11.

(2) If evaluation results in a tie between an offeror that has requested the substitution of foreign construction material based on unreasonable cost and an offeror that has not requested such an exception, the Contracting Officer shall award to the offeror that has not requested an exception based on unreasonable cost.

(d) *Alternate offers.* (1) When an offer includes foreign construction material, other than designated country or NAFTA country construction material, that is not listed by the Government in this solicitation in paragraph (b)(3) of the clause at FAR 52.225–11, the offeror also may submit an alternate offer based on use of equivalent domestic, designated country, or NAFTA country construction material.

(2) If an alternate offer is submitted, the offeror shall submit a separate Standard Form 1442 for the alternate offer, and a separate price comparison table prepared in accordance with paragraphs (c) and (d) of the clause at FAR 52.225–11 for the offer that is based on the use of any foreign construction material for which the Government has not yet determined an exception to apply.

(3) If the Government determines that a particular exception requested in accordance with paragraph (c) of the clause at FAR 52.225–11 does not apply, the Government will evaluate only those offers based on use of the equivalent domestic, designated country, or NAFTA country construction material, and the offeror shall be required to furnish such domestic, designated country, or NAFTA country construction material. An offer based on use of the foreign construction material for which an exception was requested—

(i) Shall be rejected as nonresponsive if this acquisition is conducted by sealed bidding; or

(ii) May be accepted if revised during negotiations.

(End of provision)

Alternate I (DATE). As prescribed in 25.1102(d)(2), substitute the following paragraph (b) for paragraph (b) of the basic provision:

(b) *Requests for determinations of inapplicability.* An offeror requesting a determination regarding the inapplicability of the Buy American Act or Balance of Payments Program shall submit the request with its offer, including the information and applicable supporting data required by paragraphs (c) and (d) of the clause at FAR 52.225–11.

52.225–13 Restrictions on Certain Foreign Purchases.

As prescribed in 25.1103(a), insert the following clause:

Restrictions on Certain Foreign Purchases (Date)

(a) The Contractor shall not acquire, for use in the performance of this contract, any supplies or services originating from sources within, or that were located in or transported from or through countries, whose products are banned from importation into the United States under regulations of the Office of Foreign Assets Control, Department of the Treasury. Those countries are Cuba, Iran, Iraq, Libya, North Korea, and Sudan.

(b) The Contractor shall not acquire for use in the performance of this contract any supplies or services from entities controlled by the Government of Iraq.

(c) The Contractor shall insert this clause, including this paragraph (c), in all subcontracts.

(End of clause)

52.225–14 Inconsistency Between English Version and Translation of Contract.

As prescribed in 25.1103(b), insert the following clause:

Inconsistency Between English Version and Translation of Contract (Date)

In the event of inconsistency between any terms of this contract and any translation thereof into another language, the English language meaning shall control.

(End of clause)

52.225–15 Sanctioned European Union Country End Products.

As prescribed in 25.1103(c)(1)(i), insert the following clause:

Sanctioned European Union Country End Products (Date)

(a) *Definitions.* As used in this clause—

Sanctioned European Union (EU) country end product means an article that—

(1) Is wholly the growth, product, or manufacture of a sanctioned EU member state; or

(2) In the case of an article that consists in whole or in part of materials from another country, has been substantially transformed in a sanctioned EU member state into a new and different article of commerce with a name, character, or use distinct from that of the article or articles from which it was transformed. The term refers to a product offered for purchase under a supply contract, but for purposes of calculating the value of the end product includes services (except transportation services) incidental to the article; *provided that* the value of those incidental services does not exceed that of the article itself.

Sanctioned EU member state means Austria, Belgium, Denmark, Finland, France, Ireland, Italy, Luxembourg, the Netherlands, Sweden, or the United Kingdom.

(b) The Contractor shall not deliver any sanctioned EU country end products under this contract.

(End of clause)

52.225–16 Sanctioned European Union Country Services.

As prescribed in 25.1103(c)(1)(ii), insert the following clause:

Sanctioned European Union Country Services (Date)

(a) *Definition. Sanctioned European Union (EU) member state* means Austria, Belgium, Denmark, Finland, France, Ireland, Italy, Luxembourg, the Netherlands, Sweden, or the United Kingdom.

(b) The Contractor shall not perform services under this contract in a sanctioned EU member state. This prohibition does not apply to subcontracts.

(End of clause)

52.225–17 Evaluation of Foreign Currency Offers.

As prescribed in 25.1103(d), insert the following provision:

Evaluation of Foreign Currency Offers (Date)

If offers are received in more than one currency, offers shall be evaluated by converting the foreign currency to United States currency using [*Contracting Officer to insert source of rate*] in effect as follows:

(a) For acquisitions conducted using sealed bidding procedures, on the date of bid opening; or

(b) For acquisitions conducted using negotiation procedures—

(1) On the date specified for receipt of offers, if award is based on initial offers; otherwise

(2) On the date specified for receipt of final proposal revisions.

(End of provision)

52.225–18 52.225–22 [Removed]

21. Sections 52.225–18 through 52.225–22 are removed.

[FR Doc. 98–25528 Filed 9–25–98; 8:45 am]

BILLING CODE 6820–EP–P

federal register

Monday
September 28, 1998

Part III

Department of Transportation

Office of the Secretary

49 CFR Parts 37

Transportation for Individuals With Disabilities; Final Rule

Architectural and Transportation Barriers Compliance Board

36 CFR Part 1192

49 CFR Part 38

Americans With Disabilities Act Accessibility Guidelines for Transportation Vehicles; Over-the-Road Buses; Joint Final Rule

DEPARTMENT OF TRANSPORTATION

49 CFR Part 37

[Docket OST–98–3648]

RIN 2105–ACOO

Transportation for Individuals With Disabilities

AGENCY: Office of the Secretary, DOT.

ACTION: Final rule; request for comments.

SUMMARY: The Department is amending its Americans with Disabilities Act (ADA) regulations to require the accessibility of new over-the-road buses (OTRBs) and to require accessible OTRB service. The new rule applies both to intercity and other fixed-route bus operators and to demand-responsive (i.e., charter and tour) operators. The rules require operators to ensure that passengers with disabilities can use OTRBs. In connection with the forthcoming Office of Management and Budget (OMB) review of information collection requirements, the Department is requesting comment on the information collection requirements section of the final rule.

DATES: This rule is effective October 28, 1998. Comments on the information collection provisions of § 37.213 are requested on or before [90 days from December 28, 1998], but late-filed comments will be considered to the extent practicable. Comments are not requested on any other portion of the rule.

ADDRESSES: Comments should be sent, preferably in triplicate, to Docket Clerk, Docket No., Department of Transportation, 400 7th Street, S.W., Room PL–401, Washington, D.C., 20590. Comments will be available for inspection at this address from 10:00 a.m. to 5:00 p.m., Monday through Friday. Commenters who wish the receipt of their comments to be acknowledged should include a stamped, self-addressed postcard with their comments. The Docket Clerk will date-stamp the postcard and mail it back to the commenter.

FOR FURTHER INFORMATION CONTACT: Robert C. Ashby, Deputy Assistant General Counsel for Regulation and Enforcement, Department of Transportation, 400 7th Street, S.W., Room 10424, Washington, D.C., 20590. (202) 366–9306 (voice); (202) 755–7687 (TDD), *bob.ashby@ost.dot.gov* (e-mail); or Donald Trilling, Director, Office of Environment, Energy, and Safety, same street address, Room 10305H, (202) 366–4220.

SUPPLEMENTARY INFORMATION: For purposes of the Americans with Disabilities Act (ADA), an OTRB is ''a bus characterized by an elevated passenger deck located over a baggage compartment'' (§ 301(5)). The Department's ADA regulation (49 CFR 37.3) repeats this definition without change. OTRBs are a familiar type of bus used by Greyhound and other fixed-route intercity bus carriers as well as charter and tour operators.

As provided by the ADA, the Department issued limited interim OTRB regulations with its 1991 final ADA rules. The statute originally provided for the Department to issue final regulations by mid-1994, which would go into effect in July 1996 for larger operators and July 1997 for smaller operators. The Department fell behind the statutory schedule. In recognition of this fact, Congress amended the ADA in 1995 to put the final rules into effect two years from the date of their issuance (three years for small entities). Secretary of Transportation Rodney Slater made issuance of OTRBs a Departmental priority, committing the Department to issuing a proposed rule in March 1998 and a final rule in September 1998. The Department issued its proposed rule on March 25, 1998 (63 FR 14560). With this September 1998 publication of the final rule, its provisions will begin to apply to large entities in October 2000 and to small entities in October 2001.

Previous Regulatory Activity

In October 1993, the Department issued an advance notice of proposed rulemaking (ANPRM) that asked a variety of questions about the scope of accessibility requirements, interim service requirements, operational and fleet composition issues, lavatories and rest stops, training, and economic issues concerning OTRBs. Also in the autumn of 1993, the Department convened a public meeting at which DOT staff discussed OTRB issues with representatives of the disability community and OTRB industry. On various occasions, former Secretary of Transportation Federico Peña, Secretary of Transportation Rodney Slater and other DOT officials have met with disability community and bus industry groups to discuss the issues involved.

It was clear from responses to the ANPRM, the public meeting, and written comments that the bus industry and disability community had quite different views of the course the Department should follow in these regulations. The disability community believed that all new OTRBs should be accessible. The bus industry advocated a so-called ''service-based'' approach, involving such elements as a small pool of accessible buses, alternate means of access (e.g., station-based lifts and scalamobils), and on-call service. In support of its position, the disability community cited the accessibility requirements of other transportation provisions of the ADA, which uniformly require new vehicles to be accessible, and gaps and inequalities in service that they believe the industry approach would create. In support of its position, the industry cited the higher costs of purchasing and operating accessible vehicles, their projections that demand for accessible service would be low, the economic problems of the intercity bus industry, assertions that bus companies would cut rural and other marginal routes in response to accessibility requirements, and their view that their approach is more cost-effective.

The Department's NPRM proposed that all new OTRBs used in fixed-route service had to be accessible. The NPRM did not propose to require retrofit of existing buses or the acquisition of accessible used buses. Large fixed-route OTRB operators would be required to have 50 percent of their fleets accessible within 6 years, and 100 percent of their fleets accessible within 12 years, of the date on which the rule began to apply to them. Small fixed-route operators could be excused from these fleet accessibility deadlines if they had not acquired enough new buses in 6 or 12 years to replace 50 or 100 percent of their fleets.

Under the NPRM, demand-responsive operators would have to have 10 percent of their fleets accessible within two years of the application date of the rules. All demand-responsive operators would have to make an accessible bus available to a passenger who requested it. They could ask for 48 hours' advance notice. When any operator using an accessible bus made a rest stop, it would have to permit individuals who need to use the lift to get on and off the bus to use the rest stop. Operators who were not using an accessible bus would have to provide boarding assistance for rest stop purposes if such assistance did not create an unreasonable delay.

A joint Access Board/DOT rulemaking proposed standards for accessible buses. Under this proposal, an accessible bus would have to have a lift and wheelchair securement locations, among other features. Only a bus that accommodated passengers riding in their own wheelchairs was viewed as accessible.

The Department received over 400 comments on the NPRM. In general, comments from the disability

community supported the NPRM, though commenters wanted to shorten the fleet accessibility timetable and to strengthen the requirements concerning rest stops. Comments from the bus industry generally opposed the NPRM, saying that it was too costly and insufficiently cost-effective.

Principal Issues: Comments and Responses

Transporting Passengers in Their Own Wheelchairs

The NPRM, and the DOT/Access Board proposal for accessible bus standard, proposed that wheelchair users should be able to ride in their own mobility aids. As the Department explained in the NPRM preamble:

> Approaches not permitting passengers to remain in their own wheelchairs involve a minimum of four transfers on each trip (not counting rest or intermediate stops)—from wheelchair to boarding chair or device, and from boarding chair or device to vehicle seat, at the start of the trip, with the process reversed at the end of the trip. This increases the probability of discomfort, indignity, and injury, compared to a trip that does not involve transfers. Moreover, wheelchairs used by disabled passengers are often quite different from one another, reflecting the individual needs of their users. Vehicle seats are uniform, and consequently do not provide the same comfort and support as the passenger's own wheelchair. This can have health and safety implications for mobility-impaired passengers. Many mobility-impaired passengers use electric wheelchairs. Many such chairs are large and heavy. Others are of the ''scooter'' type. It is likely that most electric wheelchairs will not fit into bus luggage compartments. Based on experience in the airline industry, the process of stowing and retrieving electric wheelchairs carries a significant risk of damage to the expensive devices. Bus service to passengers who use electric wheelchairs cannot be effective if transportation for the wheelchairs is unavailable.

Disability community commenters unanimously supported this proposed requirement, pointing to the inconvenience, indignity, and increased risk of injury resulting from transfers as reasons. Hand-carrying, even in boarding chairs, is unacceptable, many commenters said. Some comments mentioned instances where passengers had been dropped, or wheelchairs been damaged, in the course of manual boarding assistance efforts. Many commenters also noted the likely unavailability of other alternatives, such as station-based lifts or extra personnel needed for boarding chair assistance, at stops in small towns or rural areas. (It should be noted that no disability community commenters shared the view of a bus industry commenter who thought that a bus seat was a more comfortable place for a wheelchair user to ride than his or her own wheelchair.)

The response of the bus industry to this aspect of the proposal was ambivalent. On one hand, industry commenters stated firmly that operators could meet the transportation needs of individuals with disabilities through a ''service-based approach'' that would make accessible buses (i.e., lift-equipped buses in which passengers could ride in their own wheelchairs) available to passengers on a 48-hour advance notice basis. (Greyhound recently announced that, as it had previously proposed, it would provide 80 accessible buses on this basis.) Sharing agreements among operators (''pooling'') would ensure that such buses would be available, they said. Many operators also referred to service they had provided successfully to wheelchair users in accessible buses. Industry commenters also cited approvingly a Canadian program that would provide accessible buses to passengers on an advance-notice basis. It was clear from these comments that the industry is convinced that providing service to wheelchair users riding in their own wheelchairs is a viable option, as long as it is organized along the ''service-based'' lines they propose. The industry's comments to this effect said nothing about safety problems companies anticipated encountering in implementing their own proposals.

On the other hand, some industry commenters questioned the advisability of allowing passengers to ride in their own wheelchairs. First, commenters said, DOT failed to consider the safety implications of placing wheelchairs on OTRBs. The comments suggested that doing so could pose a safety risk to other passengers. Second, commenters said that it was unfair to require OTRBs to be accessible when less accessibility was allegedly required in other modes (e.g., airlines, where passengers transfer into aircraft seats) or when other modes where passengers are required to be able to travel in their own wheelchairs received government grants (e.g., mass transit, intercity rail). More detailed summaries of these two lines of argument follow.

a. Safety

Industry commenters raising the safety issue made several points. First, unlike accessible transit buses, which assumedly travel at lower city speeds, OTRBs operate at highway speeds, increasing the risks to wheelchair users and other passengers if wheelchairs are not adequately secured. Second, the OTA report suggested that further review of wheelchair transportation safety was needed. Third, DOT should study crash forces in OTRB crashes so that proper securement standards could be developed and should study the crashworthiness of the variety of wheelchair designs in use, before requiring OTRB accessibility. Fourth, for safety-related reasons, DOT does not permit airline passengers to travel in their own wheelchairs, which makes it unfair to assume that it is safe for passengers to travel in their own wheelchairs on OTRBs. Fifth, the ADA and the DOT act require the Department to resolve these safety issues before proceeding to a final rule. One industry association attached a statement from a former National Highway Traffic Safety Administration (NHTSA) official, Mr. William Boehly, elaborating on some of these arguments.

b. Intermodal Unfairness

Industry comments assert that no other transportation mode has to meet a standard requiring a wheelchair lift in every vehicle with only a minimal Federal subsidy. They cite Federal grants for Amtrak and mass transit, which help to pay for accessibility requirements. They also argue that airlines do not have to buy lifts and that DOT has exempted airports with less than 10,000 enplanements from accessibility requirements. Provisions of the DOT Act and the ADA, these commenters add, require greater equity among the relative burdens accessibility requirements impose on carriers in various modes.

DOT Response—Safety Issues

a. What is the ADA Standard for Considering Safety Issues?

Under the ADA, if an agency is to limit the accessibility of programs, facilities, or services to individuals with disabilities, it must have evidence of a ''direct threat'' to the safety of others. This standard is cited in bus industry comments (see Boehly statement, p.3). However, industry commenters appear not to understand fully this standard or its implications for this rulemaking. The concept of ''direct threat'' is the following, as explained in the regulations of the Department of Justice (28 CFR 36.208):

> (b) Direct threat means a significant risk to the health or safety of others that cannot be eliminated by a modification of policies, practices, or procedures, or by the provision of auxiliary aids or services.
>
> (c) In determining whether an individual poses a direct threat to the health or safety of others, a public accommodation must make an individualized assessment, based on reasonable judgment that relies on current medical knowledge or on the best available

objective evidence, to ascertain: the nature, duration, and severity of the risk; the probability that the potential injury will actually occur; and whether reasonable modifications of policies, practices, or procedures will mitigate the risk.

This standard is designed to prevent the exclusion of persons with disabilities from services based on stereotype or speculation, as distinct from actual risk. It is meant to be a very strict standard. (See 56 FR 35560–35561; July 26, 1991). General concerns about the possibility of risk, however sincerely felt, do not provide a basis for a finding of direct threat.

This rulemaking is the fourth ADA rulemaking in which transportation providers have made safety-related arguments to support limits on the accessibility of vehicles or transportation service. The first concerned the transportation of individuals in scooter-type mobility devices. Transportation providers argued that since it was more difficult to secure these devices, and since these devices may be more likely to suffer damage in a crash than other types of wheelchairs, providers should be able to deny transportation to persons using them or require that the passengers transfer to a vehicle seat. The Department responded as follows:

The Department, consistent with the ADA's requirement for nondiscriminatory service and its legislative history, in view of the ATBCB's definition of a ''common wheelchair,'' and given the continued absence of information in the record that would support a finding that carrying non-traditional wheelchairs would constitute a ''direct threat'' to the safety of others, is retaining the basic requirement proposed in the NPRM. Under this requirement, any ''common wheelchair'' (i.e., one that will fit on a lift meeting Access Board guideline requirements) must be carried. The provider cannot deny service on the ground that the wheelchair is not secured to the provider's satisfaction. The transit authority may require that the wheelchair park in one of the securement locations (generally, the Access Board guidelines require two such locations in a vehicle) and that the user permit the device to be secured using the vehicle's securement system. If the vehicle (e.g., a currently-existing bus) does not have a securement system meeting standards, the entity must still use a securement system it has to ensure as best it can, that the mobility device remains within the securement area. (56 FR 45617; September 6, 1991).

Second, transportation providers sought change in the provision of the Department's ADA rule requiring providers to allow standees to use lifts. Again, the argument was that standees posed unacceptable safety risks. The Department responded as follows:

The key point in the comments, from the Department's point of view, is the absence of information documenting a safety problem resulting from standees' use of lifts. The ADA is a nondiscrimination statute, intended to ensure, among other things, that people with disabilities have access to transportation services. To permit a transportation provider to exclude a category of persons with disabilities from using a device that provides access to a vehicle on the basis of a perceived safety hazard, absent information in the rulemaking record that the hazard is real, would be inconsistent with the statute (c.f., the discussion of the transportation of three-wheeled mobility devices in the preamble to the Department's September 6, 1991, final ADA rule (56 FR 45617)). While we understand the concerns of transit agency commenters about the potential safety risks that may be involved, the Department does not have a basis in the rulemaking record for authorizing a restriction on lift use by standees. (58 FR 63096; November 30, 1993).

Third, a transit authority petitioned the Department for a rule that would permit it to deny use of bus lifts to wheelchair users at certain stops that it deemed too difficult or dangerous for wheelchair users to use. While this proposed rule change would deny wheelchair users the use of facilities used by all other passengers, the petitioner asserted that it was necessary on safety grounds. The Department denied the petition, stating the following basis:

* * * [T]he ADA imposes strong legal constraints on the use of classifications based on disability. Under the ADA, a proposed action which treats a disability-based class of persons differently from the rest of the public cannot be accepted merely because it may assuage a party's good faith concerns about safety. This is a position that the Department has taken consistently as it has developed and implemented its ADA regulations [citing 56 FR 45617, quoted above] * * *. Subsequently, transit community commenters raised the issue of the use of lifts by standees, which the original version of Part 37 required. The commenters expressed the concern that standees could fall off the lifts or hit their heads, resulting in injury to passengers and liability for providers * * *. [T]here was little information in the record demonstrating that a real safety problem, as distinct from speculation or fears concerning potential safety problems, existed. The Department rejected the proposal [citing (58 FR 63096, quoted above] * * *.

The Department's analysis of the [bus stop] petition is very similar to its response to these two previous issues. The petition presents a genuine, good-faith concern that a certain condition (here, terrain or other problems at particular bus stops) may create a safety hazard for a class of persons with disabilities. There is, in the comments favoring the petition, agreement that difficult conditions at some stops might, indeed, create some safety risks for wheelchair users or other persons with disabilities. But there is little in the record to suggest that there is substantial, pervasive, or strong evidence that a real, as distinct from speculative, safety problem exists.

To its credit, the petitioner attempted to show the Department that problem stops existed for which the petitioner's proposed remedy was needed. The petitioner provided a videotaped demonstration of wheelchair users attempting to get on and off buses using lifts at several problem stops. After reviewing the tape, the Department concluded that it is reasonable to believe that at such stops, wheelchair users may well have greater difficulty, and take longer, in using bus lifts than at other stops. In some of the situations, there could be a higher risk to wheelchair users than at other, more ''normal,'' stops. The Department does not find this evidence sufficient, however, to justify carving out an exception to the nondiscrimination mandate of the ADA.

In thinking about situations in which safety reasons are advanced for using disability-based classifications, the Department finds it useful to consider the ''direct threat'' provisions that exist in other provisions of the ADA. ''Direct threat'' permits exceptions—specific to an individual—to be made to ADA nondiscrimination requirements on the basis of safety. The Department of Justice (DOJ) rule implementing Title III of the ADA in the context of public accommodations defines the concept as follows [citing 28 CFR 36.208, quoted above] * * *.

[T]he Department believes that it is appropriate, and in keeping with the language and intent of the statute, to determine that disability-based classifications in transportation having a safety rationale are supportable only on the basis of analysis that incorporates the essentials of the ''direct threat'' concept in a way consistent with the nature of transportation programs. The petition at issue in this rulemaking does not, in the Department's view, closely approach what is necessary to be adopted under such an analysis. (61 FR 25410–25411; May 21, 1996)

A common theme runs through each of these rulemaking decisions. Transportation providers sought to limit accessibility on the basis of safety. Transportation providers speculated that there might be safety risks, but were unable to provide any significant evidence that the risks were real. The Department, noting that there was not enough evidence to support a ''direct threat'' finding, rejected the attempts to limit accessibility. The direct threat concept itself, and the Department's well-established application of the concept to transportation rulemakings, place the burden of proof on the proponent of limiting accessibility to demonstrate that a direct threat exists. The Department is not required to prove a negative—to demonstrate that there is no possible safety risk, or conduct extensive studies to disprove the existence of a risk that commenters assert may exist—in order to implement

fully the nondiscrimination requirements of the ADA.

b. Is There Evidence of a Direct Threat in This Case?

Bus industry comments speculated that there could be problems regarding such matters as the crashworthiness of wheelchairs, the adequacy of Access Board guidelines for the force to be restrained by securement devices, and assertedly greater risks because OTRBs travel at higher speeds than transit buses. The bus industry's argument is that the Department must study each of the issues it raised, and engage in lengthy safety rulemakings, before it may proceed with a requirement that passengers be able to travel in their own wheelchairs.

As noted above, the Department is not obliged to demonstrate that there are no safety risks before imposing an accessibility requirement. Instead, before it could impose a limitation on accessibility, the Department would have to conclude, based on evidence in the record, that there is a direct threat. There is no evidence in the record of this rulemaking demonstrating that any safety problem—let alone a problem significant enough to constitute a direct threat—exists with respect to the transportation of wheelchair users in their own mobility devices on board OTRBs.

The record is replete with representations by OTRB operators that they have successfully used accessible OTRBs for considerable periods of time. For example, the same industry association that included the Boehly statement also attached a summary of the accessible bus experience of many of its members. From all this experience of bus operators carrying actual wheelchair users in actual buses there is not a single study, not a single set of data, not a single summary of insurance claim information, not a single court decision imposing liability on a bus operator for a wheelchair-related injury, not a single accident report, not even a single anecdote demonstrating that carrying wheelchair users in their own mobility aids has ever had any actual adverse safety consequences. Notwithstanding the safety arguments in their comments, industry commenters repeatedly advocate using a percentage of accessible buses with lifts and securements to implement the ''service-based approach'' they support. The Department cannot limit the accessibility of wheelchair passengers without a basis in evidence sufficient to support a direct threat determination.

c. Bus Speeds

The industry argument concerning bus speeds is essentially that since OTRBs frequently travel at highway speeds (i.e., 55–70 miles per hour on Interstate highways), the securement standards applied to transit buses, which typically travel at slower city speeds, may not be adequate for OTRBs. It is fair to assume that, if an OTRB crashes at full highway speed, there are serious risks of death and injury to all persons aboard the vehicle, including those using vehicle seats. One need not look further than this year's multi-fatality crash of an intercity bus in Pennsylvania to prove the point. Fortunately for everyone concerned, OTRB service one of the safest modes of transportation (one industry web site declares that ''people are nearly twice as likely to die of dog bite than in a bus crash''), and high-speed crashes like the one in Pennsylvania appear to be rare.

The bus industry, individual companies, and their insurers are in the position to know a good deal about the industry's crash experience. For example, the industry would know what proportion of its crashes take place at highway speeds and what proportion take place at lower speeds in more congested urban areas. The comments do not include data of this kind. As with other types of vehicles, it appears likely that there is a higher probability of OTRBs having accidents in the midst of urban congestion, rather than on the safer ''open road'' of the Interstate system. In other words, while OTRBs travel more vehicle miles at highway speeds than do transit buses, it is reasonable to suppose that their principal exposure to crashes is likely to be in a similar environment to the one that transit buses inhabit.

It should also be noted that, in HOV lanes, busways, suburban express commuter routes, and off-peak travel on Interstate highways, transit buses often do travel at highway speeds. Transit buses, of course, must permit wheelchair users to travel in their own wheelchairs. No one has presented any evidence to the Department, in this rulemaking or otherwise, demonstrating the existence of a safety problem related to wheelchair users traveling in their own wheelchairs in this context. Nor is there such evidence in the record concerning intercity, commuter, or rapid rail systems, in none of which passengers are required to use securement systems for their wheelchairs and all of which involve travel at higher than highway speeds.

There appears to be more in common between the risk exposure of transit bus and OTRB passengers than the industry comments suggest. There is no evidence to suggest that wheelchair passengers traveling in their own mobility aids are a significant safety problem in either context. The Department does not have a basis concerning the relative speeds of transit buses and OTRBs for determining that there is a direct threat resulting from wheelchair passengers traveling in their own mobility devices.

d. Wheelchair Crashworthiness

This argument, developed at its greatest length in the Boehly statement, is that no one, including NHTSA, has established crashworthiness standards for wheelchairs that are used on board buses or other conveyances. Since there is a great variety of mobility aids, and little is known about how many models perform in crashes, industry comments say, there should be studies and a NHTSA rulemaking addressing wheelchair crashworthiness before an OTRB accessibility requirement is issued.

The Department agrees that accessible OTRBs, like other vehicles, must meet applicable NHTSA and FHWA safety requirements. We would not require OTRB operators to take action, or obtain equipment, that violate established safety requirements. The final rule includes language to this effect. In this regard, we take the same path as we did under the Air Carrier Access Act, where our regulations specify that carriers are not required to act contrary to FAA safety regulations.

It is quite another thing, however, to say that the Department should withhold accessibility requirements pending a rulemaking that NHTSA is not now pursuing and that NHTSA does not believe it has jurisdiction to pursue. The Department has no history of regulating wheelchairs and no explicit authority to regulate them. The Boehly statement asserts that NHTSA should pursue such a rulemaking. However, the absence of a rule that commenters believe NHTSA should issue in the future has no legal or practical effect on the issuance of an ADA rule by Department today.

e. Securement Device Standards.

Industry comments and the Boehly statement recommend detailed studies of the crash performance of OTRBs and wheelchairs, with the aim of establishing engineering standards for the design loads of securement devices. Once again, should NHTSA choose to conduct such studies, and should the studies result in the issuance of a final NHTSA rule, the rule would apply prospectively to accessible OTRBs.

Meanwhile, nothing in the record of this rulemaking demonstrates either that the proposed Access Board design loads for securement devices are inadequate or that present or future securement devices used on accessible OTRBs result in a direct threat. It bears reemphasis that speculation about potential hazaards is not a basis for a direct threat finding that would justify a limitation on accessibility.

Members of the bus industry who have accessible buses can be presumed to know what types of securements they currently use. If they, or their risk managers, have used or recommended securement systems that exceed the proposed Access Board guidelines, that information is available to them. No such information was provided in the record for this rulemaking, however. It should be pointed out, in any case, that the Access Board guidelines for accessible vehicle are minimums. If bus companies believe that securements exceeding these guidelines are advisable, they can install them. We also note that requirements to purchase accessible buses do not begin to apply to carriers until two years from the effective date of this rule. To the extent that bus companies are genuinely concerned about the adequacy of existing securement devices, this time should permit them to undertake additional development work toward improved securements that the bus industry could use.

f. OTA Recommendation

Industry comments cite statements in the OTA study discussing safety issues concerning transportation of wheelchairs in OTRBs and recommending further review of standards for carriage of wheelchairs in OTRBs. The OTA statements briefly mention potential risks to wheelchair users and other passengers. Like statements by industry commenters themselves about potential risks, the OTA statements do not provide a factual basis for a direct threat finding. Data, not speculation, is needed to establish a direct threat.

The OTA statements concerning potential safety issues were in context of a report that clearly recommended that all new buses be accessible and that wheelchair users ride in their own mobility aids. It is clear from the OTA report that OTA did not believe that its statements about potential safety issues precluded a requirement for accessible buses. Moreover, as the ADA itself provides, the Department is obliged to consider OTA's recommendations but is not required to adopt them. Bus industry comments clearly recognize this point when they urge the Department not to follow OTA recommendations to make all new buses accessible.

One other OTA statement cited in bus industry comments has to do with the ability of bus operators to secure wheelchairs properly if they do not do so frequently. The final rule requires bus companies to train their operators to proficiency in, among other things, wheelchair securements. In response to industry commenters' concern that their operators might forget how to carry out this or other functions, the rule also mandates refresher training, as needed, to maintain proficiency. The rule does not mandate any particular training time, curriculum, or inteval. These matters are best left to bus companies as they determine what is necessary to ensure that employees become and remain proficient as providing service to passengers with disabilities.

g. Buses and Airplanes

Industry comments argue that because wheelchair users must transfer to aircraft seats, it may be necessary for safety reasons to follow the same practice in OTRBs. As one comment put it, ''If onboard wheelchairs are deemed not safe for the airline industry, they cannot be assumed safe in the OTRB industry.'' This argument misses what should be a very obvious point: buses don't fly. Industry comments that make much of the differences between OTRBs and transit buses do not mention the far greater differences between OTRBs and commercial passenger aircraft.

OTRBs do not take off, cruise, and land at speeds in the hundreds of miles per hour. Even on the most potholed of city streets, OTRB passengers do not experience forces similar to those experienced by airline passengers during episodes of turbulence. In normal flight, airline passengers are likely to experience substantially higher g forces (e.g., takeoff acceleration), steeper angles (e.g., while ascending and descending) and bigger bumps (e.g., upon many landings) than bus passengers. DOT safety rules for seats and passenger restraints in buses (see for instance 49 CFR 571.207 and 571.222) and aircraft (see for instance 14 CFR 25.562 and 25.785) are very different from one another, as befits the different modes of transportation. For example, airline passengers are required to fasten their seat belts, which themselves have very specific requirements for the forces they must restrain. Buses are not even required to have seat belts.

The flawed analogy between aircraft and OTRBs fails to establish that, because aircraft passengers must transfer into airplane seats and fasten their seat belts, there is a direct threat to the safety of bus passengers if wheelchair users ride in their own wheelchairs.

h. Other Statutory Provisions

In addition to citing the direct threat language of the ADA, the Boehly statement refers to ADA language tasking OTA with studying ''the degree to which [OTRBs] and service are * * * readily accessible to and usable by individuals with disabilities'' (citing 42 U.S.C. 12185(2) [sic]. The statement asserts that this term means that buses be able to be entered ''safely and effectively.'' The latter words are not in the statutory provision.

In any case, this portion of the ADA is not a mandate that the Department must prove that there are no potential safety issues before issuing an accessibility rule. Neither the statute nor the courts have ever stated or implied such a requirement in any ADA context. The extent to which OTRBs are ''readily accessible'' was one of several matters into which OTA was to look as it made recommendations concerning OTRB accessibility. As noted above, OTA strongly recommended that all new buses in fixed-route be accessible. Of course, DOT is not obliged to adopt OTA's recommendations in any case. This language does not preclude the Department from issuing a requirement for accessible OTRBs, even if alleged safety issues are not resolved to the industry's satisfaction.

Commenters also cited a provision of the Department of Transportation Act that provides that the Secretary is to consider the needs for effectiveness and safety in transportation systems. This is part of the general statement of the Department's responsibilities. It is not a requirement that the Department proceed in any particular way on this or any other specific rulemaking.

DOT Response—Intermodal Unfairness

All modes of transportation have to meet significant accessibility requirements. These obligations are well known. Many are parallel to, or more stringent than, requirements for OTRB accessibility. New transit buses and intercity, commuter and rapid rail cars must be accessible, just like new fixed-route OTRBs. Other modes must make good faith efforts to obtain accessible used vehicles as well; there is no parallel requirement for OTRBs. OTRBs are excused from requirements to have accessible restrooms if doing so will result in a loss of seats; intercity rail cars are not. Fixed-route transit

authorities must provide expensive, operating cost-intensive paratransit services to passengers who cannot use fixed-route transit. There is no parallel to this requirement for OTRB companies. The ADA requires facility modifications for rail stations (e.g., key station retrofits for rapid and commuter rail; retrofits of all Amtrak stations). OTRB companies, whose existing stations are subject only to the general requirements of Title III of the ADA, have no parallel retrofit requirement.

Infrastructure-related costs also vary among the modes. New rapid rail systems have significant construction costs. All types of rail systems, directly or indirectly, pay to maintain their rights of way. Through airport landing fees, aviation fuel taxes, and passenger facility charges, airlines directly or indirectly contribute significantly to the costs of the construction and maintenance of the infrastructure they use. OTRB operators, on the other hand, have since 1984 been exempt from all but three cents of the Federal tax on diesel and other special fuels. The value of this exemption is currently 21.3 cents per gallon. This tax saving—in effect, an indirect Federal subsidy—allows the bus industry to use the nation's highway infrastructure at a considerably lower cost than other users.

The airline industry is governed, for accessibility purposes, by the Air Carrier Access Act, rather than the ADA. Like the OTRB industry, it consists of private companies who (except for some small carriers who receive financial assistance under the Essential Air Service program) do not receive public grants. Unlike the OTRB industry, airlines provide for level-entry boarding for all passengers in many situations, usually through expensive loading bridge equipment. Recently, the Department began requiring lifts for situations in which level-entry boarding does not exist for small commuter aircraft at most commercial service airports. We anticipate proposing to expand this requirement to other aircraft where level-entry boarding is not available. (The Department's rule provides for carriers and airports to work together to make lifts available.) It is not correct to say, as one industry comment suggested, that airports with fewer than 10,000 annual enplanements are not subject to accessibility requirements. As public entities, airports are subject to normal ADA Title II requirements for accessibility, without regard to the number of enplanements.

Industry comments also argue that most transportation providers in other categories receive significant Federal grants. Such programs do, of course, exist. We would point out that TEA–21 authorizes a subsidy for OTRB operators dedicated to accessibility costs. The overall grants to other surface modes are higher, in their absolute amounts, than the subsidy authorized by TEA–21 for OTRB accessibility. Of course, the other surface modes also have higher total costs and higher accessibility costs (especially for mass transit, with its paratransit mandate).

It should also be emphasized that in transit and intercity rail, Federal grants are not dedicated to the purpose of defraying accessibility costs. They are grants that apply to the overall capital and, to an extent, operating costs of the systems. (TEA–21 largely eliminated transit operating assistance, which was available to help pay for the costs of paratransit operations.) Accessibility programs must compete for these Federal grants with other system priorities. Unlike grants for mass transit and Amtrak, the subsidy authorized in TEA–21 for OTRB operators is dedicated to accessibility costs (the transit program does provide an additional 10 percent Federal share toward capital purchases of accessibility equipment). This subsidy addresses, precisely and in a significant way, the costs of compliance with this rule. In this important respect, it has no parallel in other modes. As with all TEA–21 funding for all programs, even those with guaranteed funding, the availability of funds is subject to the budget and appropriations processes.

It is true, as industry comments point out, that the TEA–21 OTRB subsidy is only authorized through the end of TEA–21. This is true of transit and Amtrak grants as well, all of which must be reauthorized in the next highway/transit authorization bill in order to continue. As noted below, other Federal funding sources are available to help defray OTRB costs.

Transportation modes differ significantly from one another. Accessibility requirements, and sources of funds to pay for them, are not the same in every mode. It is not fair to say, however, that accessibility requirements are more burdensome for OTRB operators than for anyone else. Nor is it fair to say that the OTRB industry is worse off than everyone else with respect to accessibility costs or Federal assistance in helping to meet the costs.

In any event, the Department is not required, as a legal or policy matter, to equalize the burdens on all modes or companies. There is no provision of the ADA that so requires. In the ADA, Congress specified the requirements for other surface modes, sometimes in great detail. Congress delegated the task of determining requirements for OTRBs to the Department, but nothing in the language or legislative history of the ADA requires OTRB costs to be the same as, or directly proportional to, costs in other types of transportation.

Nor do any provisions of the DOT Act or other statutes applying to the Department require an ''equalization'' of costs, burdens, or benefits among modes. Given the very real differences among modes, it is doubtful that such a result is attainable, and it is not required in other areas, such as safety regulation (e.g., where airlines are regulated in significantly greater detail than buses) or grant program provisions (e.g., where Federal financial assistance pays a greater portion of the costs of building a highway than operating a transit system). Accessibility requirements may likewise legitimately reflect differences among the modes.

DOT Response—Conclusion

The Department's final rule, and the DOT/Access Board provisions concerning accessible bus standards, will continue to provide for wheelchair users riding in their own mobility aids.

Accessible Buses and the ''Service-Based Approach''

One of the principal debates surrounding this rulemaking is that of the competing claims concerning the necessity for accessible buses in operators' fleets. Generally, disability community commenters said that accessible buses were essential, while operators said that a ''service-based approach'' centering on 48-hour advance notice service would provide just as good service on a much more cost-effective basis. While this debate touched on charter/tour service, it focused on fixed-route service.

Disability community comments unanimously said that service in accessible buses was essential, and that solutions short of this—use of station based-lifts, boarding chairs, etc.—were wholly inadequate. Risks of transfer were real (e.g., passengers who were dropped, passengers who had to crawl on board, wheelchairs that were damaged), they said, and station-based lifts and sufficient personnel to assist boarding would not exist at many stops. The lack of service in accessible buses denies needed and essential transportation opportunities to persons with disabilities, many of whom are low-income, transit-dependent persons, with few if any affordable transportation alternatives, particularly in rural areas. Advance-notice fixed-route service on a permanent basis is discriminatory, they said. All passengers must have the same

opportunity to travel when they wished, including on short notice.

Moreover, the ''pooling'' arrangements needed for the industry's approach would not work, they said. The logistics are complicated, and there is no information to suggest that they could be made to work successfully, particularly in the context of interlining or other service requiring well-timed transfers between buses. Commenters were concerned that passengers would be stranded at transfer points. One disability group did an informal survey of advance notice service by a large operator under present § 37.169 that it said revealed numerous failings in the service. If carriers can't make present interim service work, commenters argued, how can they make their ''service-based approach'' work? Other disability community comments also related anecdotes of failed advance notice service in the bus industry. Commenters also recalled what they viewed as significant logistical problems with ADA paratransit and advance notice service in the airlines, saying that it is very difficult for any organization or group of organizations to make such service work consistently well. Moreover, the industry has also underestimated the cost and difficulty (e.g., communications, computer services, planning, dispatching, deadheading) of operating good demand-responsive service.

From the industry's point of view, requiring all new buses to be accessible is unnecessary and cost-ineffective. Given the low usage of accessible buses that the industry expects, a small number of accessible buses (e.g., 80 for Greyhound) deployed in a 48-hour advance notice mode could meet all fixed-route demand, commenters said. Doing so would be far more cost-effective than acquiring a fleet of accessible buses, in the sense that the industry would spend fewer dollars per expected ride by persons who need accessible buses. Some unions for bus company employees supported this point of view.

Commenters assured the Department that the logistics of such a system could work, though they provided few details about how it would work. The carrier that was the subject of the disability group survey that alleged poor service commented that it had an extensive training program for its personnel and that it could either not verify most of the problems alleged or that the alleged problems were contrary to its policy. Operators also commented that the service-based approach would provide accessible service sooner than the NPRM's proposal, which they said would ''delay'' accessible service for 12 years, compared to the advance notice system they were prepared to inaugurate in the near future.

Industry commenters also disagreed with the disability groups' assertion that advance notice service in the fixed-route context was discriminatory. One operator commissioned a survey of a small number of selected passengers who, it said, preferred an advance-notice system to something like the Department's NPRM. Moreover, this operator said, most passengers—particularly most disabled passengers—call ahead of time to make arrangements for or inquiries about service. If passengers ordinarily call ahead of time anyhow, the carrier argued, it is not discriminatory to require them to do so in order to get an accessible bus.

DOT Response. Two good friends and traveling companions, Don and Mike, go to the bus station Monday morning. Don is ambulatory. Mike is a wheelchair user. They both approach the ticket window and pay $34 for a ticket. The ticket seller says to Don, ''Your bus is at Gate 5. It is leaving in 10 minutes. Get on it and proceed to your destination.'' The ticket seller says to Mike, ''Come back Wednesday. Then we'll have a bus you can use.'' The scenario works the same way over the telephone. In response to their Monday morning calls, the reservationist says to Don, ''Your reservation is confirmed. You bus leaves at noon today.'' To Mike, the reservationist says, ''Your reservation is confirmed, but you can't leave until noon Wednesday, because we won't have a bus you can use before that.''

In this scenario, two people seek the same service at the same time. One gets the service immediately, the other gets the service after a two-day delay. The only difference between them is that one is ambulatory and the other is a wheelchair user. In a very precise sense, the scenario is discriminatory: it provides more delayed, less convenient service to some passengers than to others, based solely on disability. Adopting industry proposals for fixed-route service across the board, particularly with respect to large-fixed route operators whose service constitutes the backbone of intercity bus service, permanently institutionalizes this scenario. This is very difficult to reconcile with the purposes of a nondiscrimination statute like the ADA.

In establishing a rule for large fixed-route carriers' obligations under the ADA, it is not appropriate for the Department to adopt a system institutionalizing disability-based distinctions in the quality of service. Doing so would mean that carriers who provide a large majority of all intercity trips would never need to provide fully accessible, everyday, nondiscriminatory service. While it makes policy sense to make some accommodations for small carriers on the margins of the fixed-route system (see discussion of small mixed-service operators below) the Department believes the backbone of intercity service must consist of fully accessible, nondiscriminatory everyday service if the purposes of the ADA are to be fulfilled.

It may be that many passengers, disabled and non-disabled alike, call fixed-route bus companies before they travel. Certainly, under present § 37.169, calling ahead to try to arrange boarding assistance is the *only* way passengers with disabilities can hope to travel on most fixed-route bus service, so it would be surprising if some passengers didn't call. We note that commenters, while saying that a lot of passengers called for information before traveling, did not assert that large percentages of passengers made advance reservations. Since carriers provide immediate service to passengers (unless they are disabled passengers requiring boarding assistance), it is not necessary for them to do so.

In any case, the fact that passengers may call for information does not negate the discriminatory impact of requiring a disabled passenger to make an advance reservation while other passengers can and do receive immediate service. Even if everyone called the bus company ahead of time, and even if everyone made a reservation, a system that allowed non-disabled passengers to make a reservation for today while requiring disabled passengers to make a reservation for two days from today would be discriminatory. It would single out passengers with disabilities as the only category of persons who were required to make reservations two days in advance.

Industry comments consistently assert that a service-based system will work in the fixed-route context. Unfortunately, industry comments included little, if any, factual or analytic information from which the Department can determine whether such a system really would work. Given the number of points served by fixed-route bus systems and the complexity of bus scheduling, particularly where transfers and interlining are involved (points made by bus industry commenters themselves in the context of their discussion of unscheduled rest stops), it is not self-evident that the logistics of 48-hour advance notice service could be made to work system-wide. Disability community comments raised reasonable

doubts about the likelihood of success, based on experience with the bus industry and other modes.

The Department reviewed the information in one industry comment concerning the brief consumer research paper prepared by a consultant. It involved telephone interviews with a small number of wheelchair users, many of whom were selected because of previous phone contacts with the carrier. The researcher then asked the respondents whether they would prefer a 48-hour advance reservation system or a system in which all buses were accessible, but all passengers would pay a fare increase (the information in the comment did not state what size fare increase the researchers suggested to respondents would be involved). The questions appeared to assume that the advance notice system would succeed logistically in producing the requested service. Most of the respondents said they preferred the advance notice system under these circumstances.

This consumer research paper is neither persuasive nor relevant. The small number of respondents, the bias in the selection method for many of the respondents, and the bias produced by the form of the questions and the assumptions underlying them, among other factors, undermine whatever value it might have as popularity poll for the point of view it was designed to support. It is best viewed as an illustration of the survey research truism that one can determine the outcome of a poll by the way one formulates the questions.

In any case, popularity polls for policy choices have limited relevance to the rulemaking process. Unlike some activities (e.g., TV network programming), rulemaking is not run by polling numbers. Compared to the substance of comments on the record from those individuals and organizations who chose to actually participate in the rulemaking process, such polls carry little weight. If the individuals polled believed that the Department should alter its proposed approach, they had the opportunity to comment and say why, but they apparently chose not to do so (since no comments from individuals who identified themselves as having disabilities took the position that the poll represents the respondents took.)

It is not accurate to say that the Department's decision to require the acquisition of new accessible buses will in any sense ''delay'' accessible service, compared to the industry's preferred approach. Under the interim service provisions, fixed-route operators will have to provide 48-hour advance notice service until their fleets are 100 percent accessible, just as the industry proposed. The difference between the industry proposal and the final rule is that, under the latter, most fixed-route fleets—particularly those of large carriers—will ultimately become 100 percent accessible, rather than advance notice service becoming the permanent approach.

The industry's economic arguments are discussed in more detail in subsequent sections of the preamble. At this point, we note that industry comments have repeatedly mischaracterized the provisions of the ADA relating to the OTA study as *requiring* the Department to adopt a ''cost-effective'' solution. The provisions of the ADA say no such thing. Rather, the provisions of the Act list cost-effectiveness as one of several matters that OTA was to study. DOT was to take OTA's study, its purposes, and its recommendations into account, which the Department has done. The statute does not mandate that the Department accept any of OTA's findings. It does not mandate that the outcome of the Department's rulemaking meet any particular substantive test. Congress could have written statutory language that said ''DOT shall issue a regulation adopting the approach to OTRB bus accessibility having the lowest cost per stimulated trip,'' or ''DOT shall not issue a regulation unless the approach satisfies industry cost-effectiveness criteria.'' Such language may have had the effect the industry seeks to read into the existing statutory language. But Congress did not do so.

We also note that it is difficult to argue that an approach is ''cost-effective'' unless it is *effective* in achieving its objective. The objective of OTRB service under the ADA is to provide service that works to passengers with disabilities in a nondiscriminatory manner. A system premised on a discriminatory mode of providing service that has not been demonstrated to be workable cannot be presumed to be effective.

Fleet Accessibility Deadlines

The NPRM proposed to require fixed-route operators to ensure that their fleets were 50 percent accessible 6 years into implementation of the final rule and 100 percent accessible 12 years into implementation. Small operators would be excused from these deadlines if they had not obtained enough new buses in those time periods to meet the required fleet accessibility percentages. These deadlines were intended to provide a time certain when passengers could count on regular, scheduled accessible service on all runs as well as to create a disincentive for companies to delay bus replacements to postpone accessibility. The 12-year target for 100 percent accessibility was based on information concerning the normal bus replacement cycle of large carriers. In addition, demand-responsive providers were to achieve 10 percent fleet accessibility within two years, again with a provision excepting small carriers who did not obtain enough new buses in that period to meet the deadline.

Disability community commenters generally supported the concept of fleet accessibility deadlines for fixed-route operators. Commenters believed that fleet accessibility schedules were important, among other reasons because, in their view, the bus industry was so opposed to accessibility that it could not be trusted to proceed toward accessibility in a measured way. It was necessary to hold the industry's feet to the fire, in this view. However, most of these commenters thought that the proposed deadlines were too far into the future. They would allow 20 years between the passage of the ADA and full accessibility, some pointed out. The bus industry should not be rewarded for its opposition to accessibility and the statutory and DOT-created delays in promulgating rules, others said. Suggestions for fleet accessibility timetables included 4 and 8 years, 4 and 10 years, 2 and 5 years, 3 and 6 years, etc. for 50 and 100 percent fixed-route fleet accessibility.

Even aside from its opposition to a requirement to obtain new accessible buses, the bus industry strongly opposed the proposal for fleet accessibility deadlines. Part of this opposition appears to be based on a concern about their effect on small fixed-route operators. Industry comments expressed concern that the deadlines would force small companies to accelerate the purchase of vehicles, purchase new instead of used vehicles, or take other uneconomic actions that would impose unreasonable costs and lead them to abandon fixed-route service. Commenters also expressed concern about the potential effect of the deadlines on the resale value of inaccessible buses.

Moreover, commenters said, the proposed deadlines were based on the replacement cycles typical of large carriers, which do not necessarily apply to smaller carriers. Even large carriers may not always be able to maintain a 12-year replacement cycle, commenters said, because of changes in economic conditions. The requirement placed them in an economic straitjacket that

hampered their ability to respond flexibly to market conditions, they said. It was unfair to impose on bus operators a timing requirement that other modes did not face under the ADA, they added.

With respect to charter/tour service, disability community commenters generally favored the 10 percent requirement, though some thought it was too low, believing that 20 or 25 percent would be a better figure to ensure the availability of accessible buses in the charter/tour segment of the industry. Bus industry commenters decried what some called a ''quota'' approach, saying that this imposed unnecessary costs and that it made more sense to eliminate a number-based requirement altogether and simply require that operators meet identified needs on a 48-hour advance notice basis, with an accountability mechanism.

DOT Response. It appears that some of the bus industry's concerns about the effect of the proposed deadlines on small operators were based on a misunderstanding of the NPRM. Used buses would not be required to be accessible. Retrofit would not be required. Under the NPRM, if a small fixed-route operator did not obtain enough new buses within the stated time frames to replace 50 or 100 percent of its buses (e.g., it kept its old buses a long time, or it purchased only used buses), it would not violate the proposed rule. Substantively, the NPRM formulation for small fixed-route operators—the fleet accessibility requirement plus the exception—is not very different from a requirement to obtain accessible new buses without any fleet accessibility requirement being stated.

In either case, all new fixed-route buses have to be accessible. In either case, the total fixed-route fleet becomes accessible only if and when all inaccessible buses are replaced with new buses. This being the case, we have decided it is simpler and more understandable to eliminate the fleet accessibility requirement for small fixed-route operators. There will be no retrofit or accessible used bus acquisition requirement. Small operators' fleets will become accessible when, and to the extent, that they replace existing inaccessible buses with new accessible buses. Operators must continue to provide interim service until and unless their fleets are 100 percent accessible, which, for some operators (e.g., operators who purchase primarily inaccessible used buses), could be indefinitely.

Large fixed-route operators provide the backbone of intercity bus service. For fully accessible, nondiscriminatory, everyday service to be a reality, those carriers must have accessible fleets within a reasonable period of time. These carriers typically purchase or lease new buses, and their comments do not deny that they do so on a 10–12 year replacement cycle. Consequently, the Department believes that it is consistent with the purpose and language of the ADA to require large fixed-route operators to meet a 6/12-year fleet accessibility schedule. Such a schedule is what they would meet via their normal replacement cycles, so it should not cause any economic distortions. This schedule will give assurance to consumers of the time frame in which they have a reasonable expectation of fully accessible service. Shortening these time frames, as disability community comments suggested, could force companies to disrupt bus replacement schedules or even retrofit existing buses, which we do not believe to be desirable.

The Department realizes that economic conditions can change, and companies can face unexpected problems. Bus replacements can fall behind historically typical cycles. To provide flexibility for unexpected situations, the Department has added a time extension provision for large fixed-route operators. If (1) such an operator has not obtained enough new buses in 6 or 12 years to meet the 50 and 100 percent fleet accessibility requirements; (2) it has not put itself in this position by, for example, stocking up on an unusually large number of inaccessible buses between October 1998 and October 2000; and (3) it has otherwise complied effectively with the requirements of the rule, the Secretary could grant a time extension beyond the 6 and 12-year dates. This provision avoids the potential ''straitjacket'' problem asserted by commenters, since it allows bus companies operating in good faith to obtain additional time to meet requirements in a way consistent with their actual bus replacement practices.

With respect to charter/tour operators, the Department has decided to eliminate the proposed 10 percent fleet accessibility requirement. Unlike the fixed-route sector, in which fleet accessibility is necessary for fully accessible, nondiscriminatory, everyday service, the charter/tour sector is better able to meet its ADA obligations through the industry's favored ''service-based'' approach. This is because of the advance-reservation nature of charter/tour service. If bus industry arrangements produce reliable charter/tour accessible bus service on an advance-notice basis, as industry comments assert that it can, ensuring that a particular percentage of buses in carriers' fleets are accessible becomes less important. The accountability mechanism described below is expected to help ensure that the promised service is provided.

Consequently, the final rule does not require charter/tour operators to acquire any particular number or percentage of accessible buses within any particular time frame. These companies will be responsible for providing 48-hour advance reservation service to passengers with disabilities in October 2001 or 2002, as applicable, rather than two years later as proposed in the NPRM. The two-year delay in the NPRM was premised on companies building up to a 10 percent accessible fleet in that period. In the absence of the 10 percent requirement, the rationale for a phase-in period of this length is considerably weakened. A shorter phase-in will be sufficient. Moreover, given the assurances of industry commenters concerning their readiness to meet advance notice requirements, and the fact that compliance is not required for two to three years from now, it is reasonable to believe it is feasible for operators to comply in October 2001–2002. In addition, retaining the two-year delay would mean that, for passengers of most of the operators who are small entities, it would be five years before they could count on receiving accessible service.

Small Mixed-service Operators

Bus industry commenters said that the NPRM's division of operators into fixed-route and demand-responsive components did not capture a frequent type of operation among small operators. Small operators, they said, often provided both kinds of service. Typically, such an operator is primarily a provider of charter/tour service. The typical operator uses most of its buses in, and makes most of its money from, charter/tour operations. Its fixed-route operations make up a much smaller portion of its overall activities, which may often be economically marginal. Often, the same buses are used for both fixed-route and demand-responsive purposes (e.g., a bus might be used for fixed-route service at one time during the week and demand-responsive service at another time of the week, or a bus might be used for charter/tour service initially and then moved into fixed-route service as it ages).

Small operators in this category said that they would need few, if any, accessible buses of their own to meet the 48-hour advance notice

requirements for charter/tour service. They could rely on ''pooling'' or other bus-sharing arrangements to produce an accessible bus when needed. If they had to buy accessible buses when they bought new OTRBs that would be used in fixed-route service, their costs would increase to the point where they would have an incentive to eliminate their fixed-route service.

Disability community comments did not discuss this category of operator, which the NPRM did not specifically mention. From disability community comments on other types of operations, however, it is fair to infer that disability community commenters would advocate that all new buses used in fixed-route service would have to be accessible.

DOT Response: In working on the regulatory assessment, the Department conducted a brief, informal survey of small bus operators. Based on this survey and other information available to the Department, the regulatory assessment estimates that for about 5/8 of the carriers offering fixed-route service, not more than 25 percent of their fleets is allocated to fixed-route service. Survey responses from operators in this category indicated that an average of 77 percent of their fleets were assigned to charter service.

The Department believes that industry commenters have a plausible argument. If a significant majority of an operator's buses and service is devoted to charter/tour service, with a small amount of fixed-route service on the side, it is reasonable to believe that the costs of acquiring accessible new buses for (often part-time) use in fixed-route service would provide an incentive to limit or end fixed-route service. In order to avoid this effect, we are modifying the requirements for operators in this category, which the final rule defines as a small operator 25 percent or fewer of whose buses are used in fixed-route service.

The final rule gives operators in this category the option of providing all its service—fixed-route as well as demand-responsive—on a 48-hour advance notice basis. This approach would remove the incentive to eliminate fixed-route service discussed above. It would also permit these small operators to meet all requirements through only one set of procedures.

This approach admittedly has disadvantages from the point of view of passengers with disabilities. It encounters the discrimination and logistics issues discussed in connection with fixed-route service by large operators. As a policy matter, however, the situation of small mixed-service operators is quite different from that of large fixed-route operators. They are at the periphery, not the center, of the nationwide intercity bus system. They carry a much smaller percentage of fixed-route passengers. Treating these operators differently from large fixed-route operators, moreover, is consistent with Regulatory Flexibility Act policy. Consequently, the Department has concluded that, on balance, this approach is acceptable in this limited set of circumstances, particularly in view of the accountability mechanism discussed below.

Accountability Mechanism

A number of bus industry comments, in the course of providing assurances that 48-hour advance notice service will work, suggested the idea of an accountability mechanism for the provision of promised service. There were two principal ideas. One industry association suggested a ''complaint board,'' an administrative body that could act in a mediation role with respect to consumer complaints and could also sanction bus companies that fail to meet their obligations. Another industry association suggested a mechanism for the immediate compensation of passengers' failure to provide required accessible service, generally analogous to ''denied boarding compensation'' in the airline industry.

The Department believes that these industry suggestions have merit. The final rule includes a version of the second idea. When an operator is obligated to provide service on 48 hours' advance notice (whether in charter/tour, interim fixed-route service, or elsewhere) or is providing equivalent service (if a small fixed-route operator elects to do so), either the required accessible vehicle is provided in a timely manner or it isn't. Either the lift works or it doesn't. It is not necessary to conduct an administrative proceeding to determine these simple factual matters. It is not necessary to refer the question to a board sitting in Washington, D.C.

Instead, when there is a failure to provide required service, the operator would pay a predetermined amount of compensation to the passenger. This is not a fine or a civil penalty that is paid to the Department. It is paid to the passenger whose travel is prevented or disrupted by the operator's inability to provide accessible service. The amount of compensation is set by an increasing, graduated scale. The first time a given operator fails to provide required service, it pays the passenger $300. By the fifth such occurrence for any company, the amount becomes $700. Assuming that operators' comments that they can readily meet the 48-hour requirement are soundly based in reality, occasions for paying this compensation should be infrequent. Lest paying compensation to the occasional passenger simply be regarded as a cost of doing business, the rule states that paying compensation is not a defense in litigation brought to enforce compliance with the rule (e.g., a ''pattern or practice'' lawsuit filed by the Department of Justice under Title III of the ADA).

Stimulated Demand

There was considerable debate in the comments about the extent to which accessible OTRB service will increase passenger demand. This issue is important primarily for its effect on the projected net cost of compliance with the Department's rule. The greater the stimulated demand—new revenue trips generated by passengers with disabilities and persons accompanying them—the lower the net compliance cost of the rule.

Bus industry commenters asserted that the estimates of stimulated demand in the regulatory assessment accompanying the NPRM were greatly overstated. Many small bus companies related their own experience: in many years of providing service, they said, they had received few if any requests for service from passengers with disabilities. Even some companies that had purchased accessible buses and, in a few cases, promoted their use had received a miniscule number of requests for accessible service.

More generally, industry comments cited the so-called ''Nathan Study,'' a report prepared by a consultant for a large carrier for purposes of this rulemaking, for the proposition that, based on experience in a few situations in which limited fixed-route OTRB service had been provided, stimulated demand could be expected to be quite low (e.g., 13,600 trips annually for the largest intercity carrier). This experience, commenters said, was more likely to be representative of demand than transit or commuter bus experience, which, because it involved shorter, less discretionary, trips, was likely to produce higher ridership by passengers with disabilities.

Disability community comments said that there was a large untapped market among people with disabilities for service. This market should only grow larger with the aging of the ''baby boom'' generation, they said. Transportation is a matter of great concern to the elderly and disabled, and they will travel if they are assured that

the entire chain of a trip is accessible. Demand to date has been suppressed by the unavailability of accessible service. It is no wonder that many bus companies have few requests for service from disabled passengers: the passengers know that service isn't accessible, and they don't bother to seek service they know they can't readily use. Commenters also referred to the substantially higher ridership estimates of the OTA study. As has been the case in other modes, commenters said, demand will grow as service improves and becomes accecssible. This is likely to be true of the intercity bus industry because it offers a unique service, which is the only available mode of intercity service for many disabled passengers.

DOT Response: Experience has shown that once passengers with disabilities are assured that accessibility is widespread they will begin to take advantage of these services. Beyond this general point, however, there remains wide divergence in estimates of potential new ridership. The ''Nathan Study'' asserts that it anticipates 13,600 wheelchair passenger trips per year on accessible Greyhound service, based on the mid-point of the trip results of on-going operations using accessible OTRBs in Massachusetts and Colorado, and service demonstration projects in Canada. This report does indicate, however, that if made solely on the basis of the Denver Regional Transportation District (RTD) experience, an estimate of demand might be as high as 35,000 trips per year by wheelchair users.

At the other end of the spectrum is the OTA report, which essentially assumes that persons with disabilities would travel and generate trips at the same rate as all of the citizens in the population once OTRB fleets are fully accessible. The assumption would result in 180,000 trips being made annually by persons using wheelchairs over the whole intercity fixed-route service system. The report goes on to note (pg. 95) that estimating travel demand is notoriously difficult for services that have not been introduced. Further, the Massachusetts and Canadian programs were not representative of full-scale future accessible service because of limited connectivity to the broader national system and the continued existence of certain barriers to persons with disabilities. Further, one can only conjecture how many of the trips estimated by OTA for the cited populations are already being taken.

In preparing the Regulatory Assessment for the final rule, the Department relied on estimates from a variety of sources, which varied in their projections of stimulated traffic by a factor of seven. Given the uncertainties involved in estimating demand generated by a system that is not yet in existence, we have expressed our projections in terms of a range with a high and low estimates.

For the high-end estimate presented in the assessment, it is assumed that demand by wheelchair passengers and other mobility-impaired passengers will grow substantially once there is full access to a nationwide accessible OTRB system. The urban transit systems that will provide connectivity in the form of entrance and egress for many intercity OTRB trips will also be becoming more accessible as the ADA continues to take effect. Many barriers will remain, however, and for the future period with which this Regulatory Assessment is concerned it is not expected even for purposes of the high-end estimate that there will be achieved the universal accessibility assumed in the estimates by OTA.

When persons with disabilities can travel, they will often take along family members or personal assistants. Consistent with the data in the American Travel Survey, the high-end estimate assumes that approximately 17 percent of new patrons with disabilities will be accompanied by family members. On the other hand, transit data suggests little additional use of lift service by cane and crutch users, so this portion of the estimate was reduced, compared to the NPRM.

The high estimate implies that new patronage by wheelchair users of scheduled intercity OTRB service will be approximately 52,000 per year once the fleets of Class I and other intercity regular-route operators are fully equipped with lifts (i.e., 12 years into implementation of the rule). It assumes that total stimulated traffic will grow to a volume of trips of 182,000 annual trips, equivalent to 0.456 percent of total current passenger traffic of about 40 million trips per year. This percentage is made up of 0.15 persons in wheelchairs, 0.24 percent persons with other mobility impairments, and 0.066 percent family members or other persons accompanying these passengers. The Regulatory Assessment's low estimate of stimulated traffic differs from the high estimate in that the percentage of current traffic assumed to be accounted for by new patrons in wheelchairs is 0.10 percent rather than 0.15 percent, with patronage by other mobility-impaired persons and accompanying family members adjusted proportionately to 0.16 percent and 0.043 percent, respectively, or 0.303 percent altogether. It would result in a projection of approximately 121,000 total annual new trips when Class I fixed-route fleets are fully accessible. It is expected that wheelchair passengers and other mobility-impaired passengers and their families will ultimately take advantage of between 171 and 262 thousand additional trips per year on fixed-route services and between 397 and 595 thousand trips on charter/tour services. It should be pointed out that one of the sources of difference between the industry's figures and the Department's is that the former concerns demand at the beginning of a process leading to a fully accessible system, while the latter projects demand once a fully accessible system is in place, some years later.

While the high estimate of new patronage by wheelchair users reflects available experience with accessible OTRB commuter services offered by one transit operator, Denver RTD, this low estimate relies more on experience with longer-distance intercity service that would not have had any significant commuter-type patronage (in particular the programs by Canada Coach Lines) and the transit experience of Golden Gate Transit and the New York City Transit. Both estimates involve a modest reduction in projected demand, compared to the regulatory assessment prepared in connection with the NPRM.

Financial Burdens/Loss of Marginal Routes

A basic argument the bus industry made against the NPRM's approach was that it was too costly and imposed undue financial burdens on the industry, with negative effects not only on the companies themselves but on passengers who travel on marginal, especially rural, routes. Commenters emphasized the financial fragility of the industry generally and individual companies, noted that many companies typically have low profit margins and expressed the concern that the costs of accessibility proposed in the NPRM would drive some companies out of business. They mentioned the historical trend toward shrinking passenger volume and points served by intercity buses. They said that, in a number of respects, the NPRM's regulatory assessment understated the actual costs imposed on carriers. In this context, commenters argued that the actual costs imposed on carriers constituted an undue financial burden, because they would hamper the rebuilding of the capital investment of bus companies, endangering their attempts to revitalize the passenger bus business.

Bus industry commenters also provided lists of points that they

thought could well lose service if they were required to obtain accessible buses. The reasoning of the operators is that, in order to cover compliance costs, they would have to eliminate economically marginal routes, since they could not afford to raise fares across the board and remain competitive. Greyhound listed 144 points it said would face the loss of intercity service. Combining this projection with information from other carriers, an industry association projected that 278 points would lose all service, and another 378 would lose frequency of service or connections. The commenter projected that the loss of service to these points could result in an annual loss of 208,000 passenger trips, a considerably larger number of trips than the stimulated demand that the regulation would create. This commenter believed that the service would not disappear overnight, but rather incrementally as old equipment needed to be replaced by more expensive, accessible new equipment that companies would choose not to acquire.

Disability community commenters pointed to the TEA–21 subsidy as mitigating financial impacts on carriers. They also suggested that industry comments seriously underestimated the operating costs of an on-call system, which were continuing, in contrast to the discrete capital costs of accessible buses. They also criticized the objectivity and data in industry cost projections. Every business in America has to comply with ADA accessibility mandates, they said, generally without subsidy, and bus companies could do so as well.

DOT Response

a. Financial Situation of Fixed-Route Carriers

Throughout the early 1990s, most intercity carriers experienced financial difficulties, to a great extent as a result of Greyhound's 1990 drivers' strike and bankruptcy, plus two different Greyhound plans to restructure service. Many other OTRB carriers' earnings are very dependent on the state of Greyhound's service, over 30 percent of which involves interlining with other carriers. In 1996 and 1997, all but a few Class I intercity carriers began to creep into the black, or break even.

There is naturally some variation in the financial strength of different carriers. For example, the Class I financial reports (for the year 1997) filed with DOT's Bureau of Transportation Statistics show privately held Peter Pan Lines (Massachusetts), much smaller than Greyhound but the next-largest carrier in terms of regular-route intercity revenues and its effective competitor in certain heavy-density Northeastern markets, generating operating expenses (before interest and taxes) at a rate of 86 percent of revenues as contrasted with 97 percent for Greyhound Lines itself.

However, when viewed as a whole, the industry's financial position continues to center on Greyhound, the extensive debt financing of which generates an annual interest expense that is still substantial compared to operating earnings. Greyhound and its consolidated subsidiaries have incurred net losses in all but one year since the driver's strike, ranging from a high of $77.4 million (1994) down to $6.6 million (1996). Their loss for 1997 was $16.9 million although they would have reported $8.4 million in positive net income had it not been for an extraordinary expense charge taken that year in connection with a re-financing transaction that spread their required debt repayments further out into the future.

According to Greyhound, in 1995, 1996 and 1997, it posted revenue and ridership increases (the first since 1991) and has realized a dramatic turnaround by streamlining operations, lowering fares, hiring more drivers, and adding long-haul services. It is beginning to restore infrastructure, and reduce fleet failure rates and high maintenance costs, by replacing an aging fleet of 15–20-year-old buses. It has also increased its package-express business, in part because of the UPS strike in August 1997. In July, 1997 Greyhound bought Carolina Trailways for $25.3 million cash, debt assumption and stock, of which $20.4 million was cash, and in August of that year purchased Valley Transit for $19 million in cash. During 1996–97, Greyhound leased 384 new buses (without lifts) financed by seven institutions. It has also committed to acquire 80 new lift-equipped buses through 1999, of which 20 have already been ordered. Greyhound raised fares by four percent last year on selected routes (while increasing their overall revenues, according to filings the company made with the Securities and Exchange Commission), and also made selected fare reductions on other route segments.

Thus, Greyhound appears to be headed for recovery along with most of the other Class I intercity/regional carriers. Some small carriers continue to face financial hardships and cannot afford to replace aging fleets. The requirements of the final rule for small operators, however, should significantly mitigate regulatory impacts on them.

b. Reductions of Passenger Traffic and Points Served

Commercial intercity carriers are also concerned about their limited ability to ''pass on'' to current passengers the costs of accessibility improvements. This can be expressed in economic analysis terms as the elasticity of overall demand for their service with respect to average price charged. The Department is not assuming that fares could be raised by an amount sufficient to completely cover the costs of compliance with the final rule by current OTRB operations in all U.S. markets without any effect at all on existing patronage. By definition, this would demonstrate perfect inelasticity of demand over that range of price change, which industry representatives suggest is not the case.

The economic model used in the regulatory assessment focuses on an elasticity of demand of -1.0. If this theoretical assumption is correct, and Greyhound needed to add about 2.1 percent to its ticket prices to wholly recover compliance costs of the rule, it could lose 2.1 percent of its revenues, which could be approximated as 2.1 percent of passenger trips being lost. Subject to appropriations, the TEA–21 subsidy would cut these figures by about a third. For Greyhound, this (i.e., the subsidized price increase level of 1.33%) would amount to a potential loss of 233,000 passenger trips out of 17.5 million. Extrapolating to the 40 million carried by large intercity carriers in 1997, this would amount to a 532,000 passenger trip decline. The offsets for stimulated traffic would range from about 53,000 to 80,000 passenger trips for Greyhound, and 85,000–127,000 passenger trips for the fixed-route system as a whole.

To the best of the Department's knowledge, there are no stated preference or revealed preference studies of the actual impacts of price rises in intercity bus travel that would empirically confirm or disconfirm the hypothesis derived from this model that a 1.3 percent price increase would have these effects. There is some room for question given the low absolute price increases involved. For example, taking into account the TEA–21 subsidy, the compliance cost of the rule would add 46 cents to the cost of Greyhound's $34.00 average fixed-route ticket. In the real world, would a transit-dependent consumer of an average intercity bus trip decline to take the trip because the ticket cost $34.46 instead of $34.00? (We note that Greyhound recently raised fares by about four percent on selected routes.) There is a considerable

uncertainty surrounding this model which makes it difficult to say with confidence what the actual magnitude of the effects of a price increase would be, and a certain degree of caution in using these estimates is in order.

With respect to cutting marginal routes, Greyhound cites a list of 19 marginal routes which could lose service. The Greyhound System Timetable for June 24, 1998, shows that the 144 points on these 19 routes represent 6 percent of the system's 2400 total points and 1.5 percent (on the basis of July operations) of their 1997 bus-miles. However, 45 of the 144 points were not listed in the timetable as having any agency service at all. Two routes, encompassing 27 points, are currently subsidized by the state of Pennsylvania.

An industry association comment enlarged the list of single-service points that might be abandoned to 287, but we have reason to question some them. Most of the routes cited by this comment are served by small carriers, which have the option of buying used buses instead of abandoning the routes. The ABA projection appears not to take this possibility into account. In addition, the small operator provisions of the final rule are likely to lower significantly the number of potential number of routes cut by small operators.

Moreover, as industry comments themselves pointed out, there has been marked shrinkage of the number of passengers and number of points served by the intercity bus industry in recent decades. This appears to have been caused by changes in the economy, passengers' travel preferences, and, to an extent, by management decisions of bus industry members. Certainly accessibility requirements had nothing to do with it. It is likely, in the future as in the past, that broader economic circumstances will have much more to do with the financial health and route structure of bus companies than any specific requirement of this or any other regulation.

c. Overall Costs.

The Department's estimates of overall compliance costs of the rule are set forth in the tables below. They are summarized from material in the Department's regulatory assessment. Net costs are calculated by subtracting the projected revenues from stimulated demand generated by service complying with the rule from the overall, or gross, costs. All costs are year 2000 present value discounted costs. The following tables do not include the effect of the TEA–21 subsidy or other financial assistance available to bus companies.

OVERALL GROSS AND NET COSTS

[Millions of Year 2000 dollars]

	Gross costs		Net costs	
	22-Year	Annual	22-Year	Annual
Fixed-route	205–254	19–23	152–219	14–20
Charter/tour	38–80	3–7	16–66	1–6
Total	242–334	22–30	168–285	15–26

COSTS EXPRESSED AS COSTS PER STIMULATED TRIP

[Year 2000 dollars]

	Gross costs basis	Net costs basis
Low Estimate of Stimulated Trips	67.91–93.47	54.23–79.71
High Estimate of Stimulated Trips	45.01–61.95	31.15–48.09

d. Conclusion

The conclusion the Department draws from its review of the economic issues in the rulemaking is that, while there are identifiable economic impacts on the bus industry, these impacts are not so great as to preclude the Department reasonably from requiring the accessibility requirements of the final rule. The ADA does not immunize private parties, including bus companies, from some of the burdens of ensuring nondiscrimination for people with disabilities. The economic impacts of the rule are not sufficient to constitute an ''undue burden'' on bus companies. Given the generally improving financial health of the fixed-route bus industry, the relatively modest net, and even gross, costs of the rule are very unlikely to have devastating effects on the industry, of a magnitude that could be fairly regarded as unduly burdensome. They are necessary, ''due'' burdens of achieving the objectives of the ADA by providing meaningful, nondiscriminatory service.

In the context of industry arguments about allegedly undue financial burdens and commenters' claims that the OTRB industry is unfairly impacted by Federal requirements, compared to other modes, we believe it is useful to review the sources of direct and indirect Federal financial assistance authorized for the OTRB industry. Some of this assistance is specifically directed at making OTRBs accessible, while other funding sources represent general public subsidies to the industry. The following table summarizes the financial assistance applicable to FY 1999 through FY 2003:

[Dollars in millions]

Program	Annual average	Total
Rural Transportation Accessibility Incentive Program (TEA–21, Sec. 3038)	*$4.86	*$24.3

[Dollars in millions]

Program	Annual average	Total
Non-Urbanized Area Formula Program, intercity bus 15% set-aside (49 U.S.C. § 5311)	*31.4	*157.0
Motor fuel tax exemption	*33.5	*167.5
Total	69.8	348.8

*—authorized funds.

The Rural Transportation Accessibility Initiative is the TEA–21 subsidy dedicated to OTRB accessibility. This program authorizes $24.3 million (including $17.5 million specifically for fixed-route operators) in guaranteed funds to subsidize up to 50 percent of capital and training costs of OTRB accessibility.

Since 1992, states have been required to make funds available for fixed-route intercity bus transportation. Each state is required to expend 15 percent of the funds received through FTA's Non-Urbanized Area Formula Program for this purpose. FTA guidance specifies that these funds may be used to purchase vehicles or vehicle-related equipment such as wheelchair lifts. The guaranteed TEA–21 funding available for the 15 percent set-aside will more than double between FY 1997 and FY 2003, from $17 to $36 millon per year. The 15 percent set-aside can be waived only if a state's governor certifies that the state's intercity bus service needs are being adequately met. This program provides states a means to respond to concerns that costs associated with accessibility could result in the termination of rural bus routes.

As noted above, OTRBs have a significant fuel tax break. OTRBs are exempt from all but three cents of the Federal Motor Fuels Tax on diesel and other special fuels. The value of this exemption is 21.3 cents per gallon,, amounting to an annual tax saving for the industry of $33.5 million (based on 1996 Federal fuel consumption statistics).

In addition to the sources of assistance shown in the table, there are two additional sources of Federal funding for OTRB services. While these funding sources do not provide dedicated funding for OTRB services, and other projects compete for funds, state and local officials who are concerned about the continuation or expansion of OTRB services (e.g., on rural or marginal routes) can take advantage of them.

First, a new provision in TEA–21 expands the highway Surface Transportation Program (STP) eligibility to fund private intercity bus capital expenses (TEA–21 section 1108). This amendment gives states two additional ways of using STP funds: directly, relying on the new TEA–21 language adding intercity bus terminals and equipment as eligible expenditures, or indirectly, through transfers of STP funds to the FTA Non-Urbanized Area Formula Grant Program, described above. The STP program averages $5.5 billion annually during the TEA–21 authorization period. Second, the Congestion Mitigation and Air Quality (CMAQ) program's funds are eligible for support of OTRB service. The CMAQ program averages $4.1 billion annually during the TEA–21 authorization period.

The Department emphasizes that these sources of Federal financial assistance are not essential to the Department's ability, as a matter of law or policy, to impose the nondiscrimination and accessibility requirements of the final rule. Requiring compliance with civil rights requirements like those of the ADA is not contingent on the availability of such assistance. However, in assessing the impact of this rule, it is fair to note the fact that such assistance is available. We note also that the amount of this assistance is well in excess of the total compliance costs of the rule.

Notwithstanding the modest total costs of the rule. and the considerable Federal financial assistance available, the Department is concerned about the overall economic impact of the regulation and its impact on particular companies. The Department is acting on this concern in several ways. These include the special provision for small mixed-service operators, the time extension mechanism for fleet accessibility deadlines for large fixed-route carriers, and the absence of a fleet accessibility requirement for small fixed-route operators and demand-responsive operators, discussed above.

In addition, with respect to small fixed-route operators, the Department is adding another provision designed to reduce potential economic impacts. Rather than obtaining accessible buses, a small fixed-route operator can commit to providing equivalent service to passengers with disabilities. This service, which has to meet existing part 37 criteria for equivalent service, must also provide service to a passenger in his or her own wheelchair. The Department is not prescribing the form of this equivalent service, but it could involve an alternative vehicle (e.g., an accessible van) that the operator would provide on short notice to carry a passenger where that passenger would have gone on the operator's bus.

The Department is also adding a regulatory review provision to the final rule. This review provision commits the Department to conduct reviews of the provisions of the rule for demand-responsive and fixed-route service, including data concerning accessible buses, advance notice service, costs and ridership in 2005–2007. This review will allow the Department to make appropriate changes in any provisions of the regulation, based on actual experience concerning costs, service and other matters. We note that comments from the bus industry supported data collection for this purpose and the idea of reviewing regulatory requirements after some time had passed (though bus industry commenters would have preferred to wait until after such a review before requiring fully accessible fixed-route service). Aside from this review provision, the Department will continue to evaluate relevant data about implementation of the rule, its costs and other effects, available funding, and the success of bus companies at providing accessible service as part of our ongoing oversight of ADA compliance.

Environmental Issues

Bus industry commenters made two related environmental arguments. The premise of both arguments is that bus companies will respond to the costs of compliance with the rule by reducing marginal, especially rural, routes. Significant numbers of points and passengers will lose intercity bus service as a result, the commenters assert.

Since intercity bus passengers are disproportionately low-income persons, including members of minority groups, the industry argued that Department should consider the ''environmental justice'' effects of the proposed rule under Executive Order 12898 and a DOT Order implementing it. In addition, industry comments asserted that reductions in bus routes would lead more people to drive their cars on trips, increasing air pollution. In addition, there would be increased fuel usage because of heavier equipment on buses, needing to keep buses running longer at stops to operate the lifts, etc. These factors should be the subject of an environmental impact statement, pending which the Department should withdraw the rulemaking.

DOT Response: As noted above, the premise of these arguments is that significant adverse environmental and environmental justice effects will flow from the Department's accessibility requirements, since companies will respond to these requirements by cutting routes. This premise is flawed in two important respects. First, the economic effects of the final rule, particularly but not only with respect to small entities, are greatly mitigated by the variety of steps the Department has taken in response to comments on the NPRM and the significant financial assistance available to operators. These provisions are likely to reduce significantly the extent to which many companies would choose to respond to the requirements of the rule by reducing service. Absent the route reductions, the environmental and environmental justice impacts alleged by industry comments effectively disappear.

Second, route reductions, and any consequent environmental or environmental justice effects, are not mandated by the final rule. To the extent they occur at all, route reductions are the result of free choice by the bus companies themselves. If a bus company's costs increase for any reason (e.g., higher capital costs, high debt service, increases in fuel prices, increases in labor costs, as well as regulatory compliance), the company must decide how to deal with the increased cost. There is wide variety of potential responses. Does the company raise fares? Does it reduce service? Does it accept a lower profit margin? Does it seek additional subsidies? When a company chooses one or a combination of responses to increased costs, its choice is likely to have consequences for its customers. These choices are the proximate causes of the consequences to customers.

One point that disability community comments made, and bus industry comments did not emphasize, is that people with disabilities are disproportionately poor. If they live in rural areas, they are likely to have even fewer transportation alternatives than other persons. This group, which has traditionally been underserved by the bus industry, would receive service they can use under this rule, often for the first time. It is appropriate, in an ADA rulemaking, to pay particular attention to the needs of people with disabilities in determining what policy to pursue.

The Department will place an environmental assessment (EA) in the docket for this rulemaking. It is our judgment that the environmental effects of the rulemaking are insufficient to call for the preparation of an environmental impact statement (EIS). The EA will address the industry's air quality arguments in more detail. We would note a few points here, however. The primary air quality argument made by the industry is that people who lose bus availability because of industry decisions to cut service will take trips by car. This forgets that people often ride buses precisely because they are transit dependent (e.g., according to information in the docket, 44 percent of intercity bus passengers do not own a car and 60 percent do not own a car capable of making a 500-mile trip). This substantially limits the extent to which ex-bus passengers are in a position to substitute car trips. In addition, the industry arguments with respect to running buses longer to operate lifts and therefore increase emissions appear to ignore industry commenters' assertion that, under the industry's favored approach, there would no fewer lift boardings than under the Department's requirements. Moreover, there would need to be some ''deadhead'' trips in order to meet 48-hour advance reservations. These additional trips would probably add to the total of bus emissions.

The Department finds that this rule has no significant environmental impacts that would warrant either the preparation of a full EIS or the withdrawal of the rulemaking.

Rest Stops

The NPRM proposed that operators of accessible buses would have to permit passengers with disabilities to use the lift to get off and back on the bus at rest stops. It proposed that operators of inaccessible buses would have to provide deboarding and reboarding assistance to passengers with disabilities at rest stops, as long as doing so would not unreasonably delay the trip.

Disability community commenters strongly opposed the proposal concerning inaccessible buses. They said the ''unreasonable delay'' language did not protect the rights of passengers to have nondiscriminatory access to rest stop facilities. Operators should not have the inhumane discretion to determine when, or for how long, a passenger with a disability can use a restroom, they said. Moreover, all or some rest stop facilities themselves should be required to be accessible, so that passengers did not get off buses only to confront an inaccessible restroom.

Commenters proposed two requirements beyond those discussed in the NPRM. First, while acknowledging that the ADA does not permit the Department to require the installation of accessible restrooms on buses if doing so will result in the loss of seats, some comments suggested that many operators now purchase buses with larger seating capacities than Congress contemplated in 1990 when it enacted the ADA. One could install an accessible restroom and have no fewer seats than Congress intended a bus to have at that time, they said, complying with the intent of the statute.

Second, with respect to buses with inaccessible restrooms traveling express routes with long intervals between rest stops, operators should be required to make unscheduled rest stops to accommodate passengers who cannot use the on-board restroom. This is the only way, commenters said, to provide necessary and nondiscriminatory service to passengers with disabilities, who otherwise would unfairly have to take uncomfortable steps (such as dehydrating themselves before a trip) to adjust to the denial of restroom facilities.

Bus industry commenters generally supported the NPRM proposal. They asked for additional guidance on how to determine whether a delay was unreasonable, suggesting that schedule disruption should be an important consideration. These commenters strongly opposed the disability community request for unscheduled rest stops (or more frequently scheduled rest stops) on express bus runs. They said it would fundamentally alter the nature of express service by creating delays that would make it very difficult to meet schedules, causing chaos with respect to interline connections, and reducing competitiveness with other modes of transportation. Industry comments also took the view that most rest stops were either accessible or becoming accessible,

and that bus operators should be able to make use of those that were not on the same basis as other persons or businesses.

DOT Response: When the final rule's requirements begin to apply to an operator, that operator will have to ensure that an accessible bus (or, in some cases, equivalent service) will be provided to passengers, either routinely or on 48 hours' advance notice. For this reason, the need to provide boarding assistance to paasengers at rest stops should occur only in rare cases (e.g., when there are more wheelchair users on a bus than there are securement locations). Situations involving transportation of wheelchair users on inaccessible vehicles should occur rarely if at all after 2000–2001.

The Department is persuaded by disability group comments that operators transporting disabled passengers have an obligation to assist passengers on and off buses at rest stops, even on such rare occasions. To stop at a restroom or a restaurant, allow everyone else to get off the bus and use the facilties, but refuse to assist wheelchair users or other persons requiring boarding assistance in leaving the bus, would treat the latter class of passengers differently from all others based on their disability. It is difficult to square such different treatment with the language and purposes of the ADA.

The Department is not persuaded by disability group comments that we have the discretion to require accessible lavatory units on OTRBs as long as it will not result in fewer seats than on a typical 1990 OTRB. It is better to read the statute to preclude a requirement for accessible restrooms in any situation in which installing such a unit would reduce the number of seats to less than it would otherwise be. If a 55-seat capacity bus would have space for only 51 seats after an accessible restroom is installed, we believe that this is a seat loss for the bus even though more seats remain available than on a 1990-model 47 passenger bus.

Rest stops themselves are Title III (or sometimes Title II) facilities for ADA purposes. Many, though not all, are or will become accessible. As a general matter, we do not believe it is fair to require organizations who bring people to these facilities to be responsible for the facilities' accessibility. It would be going too far, in our view, to mandate that bus companies stop only at facilities that are actually accessible. Nevertheless, there are some situations in which it is appropriate to impose obligations on bus operators. For example, if the bus company owns or controls a facility (e.g., a bus station) and uses the facility as the place where it makes rest stop services available to passengers, then use of the facility effectively becomes part of the bus company's package of transportation services. This is also true if the bus company contracts with a facility to provide rest stop services (e.g., a tour bus company contracts with a restaurant as a place where the bus will make a food and restroom stop). In these cases, it is reasonable to insist that the bus company, on its own or through a contractual relationship, ensure the compliance of the facilities with ADA requirements.

Unscheduled rest stops are a difficult issue. On one hand, if a bus takes three hours to go between Points A and B with no stops and there is an inaccessible restroom on board, non-disabled passengers have the chance to go to the bathroom over the three-hour period and disabled passengers do not. This facially different treatment raises a discrimination issue under the ADA. On the other hand, if a bus making such a trip is scheduled to interline with another company's bus at the next destination, and incurs an unscheduled 30-minute delay because of a rest stop request, the schedule and transportation for other passengers could be disrupted. Such disruptions, and other effects mentioned in industry comments, could be more than trivial.

The Department believes that, since both sides of this issue have merit, it is reasonable to find a middle-ground solution. The final rule will require bus companies to make a good faith effort to accommodate the requests of passengers with disabilities for an unscheduled rest stop, but will not require the bus company to accede to such a request when doing so would unreasonably delay the trip or disrupt service for other passengers. The bus company would retain discretion with respect to making the unscheduled stop, but would owe the passenger an explanation for a decision not to make the stop.

Other Issues

a. Interlining

Disability community commenters raised the issue of interlining. When a passenger buys a ticket or makes a reservation through one carrier for service that involves transfer to another carrier's bus, commenters said, the carrier should have to ensure that accessible transportation is provided for the entire trip, so no one is stranded at a transfer point. While not speaking of this issue directly, some bus industry comments did allude to their ''service-based approach'' being able to handle this matter.

To provide clarity concerning interlining, the Department has added a section giving the carrier making the arrangements for the interline trip the responsibility for communicating to other carriers involved about the need for accessible service. Each carrier would be responsible for actually providing the service for which it is responsible, however.

b. Interim Service

There were few comments concerning the interim service provisions of the NPRM. Bus companies said they could comply, since the interim provisions were similar to the service-based approach they support. Disability community commenters said that the provisions were acceptable on an interim basis, since full fixed-route accessibility would be required later. While there were few comments that directly pertained to the time frames for providing interim service, carrier comments emphasized the readiness of the carriers to provide ''service-based'' transportation in the near future. Given that there are two or three years between now and the application dates of the rule it is reasonable to conclude that an additional two years is not necessary for carriers to provide interim service in accessible buses. In addition, retaining the two-year delay would mean that, for passengers of most of the operators who are small entities, it would be five years before they could count on receiving accessible service. Consequently, the final rule reduces the proposed phase-in period in half and calls on fixed-route carriers to begin 48-hour advance notice interim service in October 2001 or 2002.

c. Training and Maintenance

Disability community comments emphasized the importance of training of personnel and maintenance of accessible features. There were few comments on these subjects from bus industry commenters. Training and maintenance requirements were proposed in the NPRM. The final rule clarifies the content of the training requirements and specifies the lift maintenance requirement, which is similar to that for other modes.

d. Discriminatory Actions

Disability community commenters suggested that certain alleged practices of the bus industry under the current interim regulations should be proscribed (e.g., using traveling companions or paramedics to assist passengers' boarding, without the passengers' consent; unjustified denials

of service). We have added a provision enumerating several prohibited practices. We would note that most of the occasions for the problems to which this section refers should be much reduced when the interim service and ultimate accessibility requirements of the new rule are implemented, since accessible vehicles will be used for virtually all trips for passengers with disabilities beginning October 2001/2002.

e. Additional Passengers Using Wheelchairs

In addition, in response to some comments from both disability community and bus industry parties, we have specified that, if there are more wheelchair user passengers than securement locations on a given bus, ''extra'' passengers would be given the opportunity to receive boarding assistance with a transfer to a vehicle seat. If the passenger declined this offer, the bus company would not have to provide transportation to the passenger on that run.

f. Technical Accessibility Standards

Bus manufacturers and some industry commenters provided technical comments on the proposed bus accessibility standards proposed jointly by DOT and the Access Board. The Department is in agreement with the responses to the Access Board to these comments in its rulemaking document (e.g., with respect to door height and lighting issues), also published today, and we are adopting the Access Board's guidelines as an amendment to 49 CFR part 38. These standards determine what an accessible OTRB looks like for purposes of subpart H of part 37.

g. Definition of an OTRB

A few bus industry commenters expressed the concern that companies might seek to avoid requirements by acquiring buses that did not fit the statutory and regulatory definition of an OTRB. If any company actually contemplates such a tactic as a means of avoiding ADA accessibility requirements, it would not achieve its objective. A bus that does not fit the definition of an OTRB is simply a vehicle subject to the normal accessibility requirements of Title III of the ADA and part 37. Such a bus would not benefit from the special provisions applicable to OTRBs. For example, a fixed-route provider buying a new non-OTRB would have to buy an accessible bus. A demand-responsive provider buying a new non-OTRB would have to buy an accessible bus or provide equivalent service.

Section-by-Section Analysis

Section 37.3—Small Operator Definition

This section defines a Class I operator as a large operator. (Class I carriers are defined as carriers with $5 million more in gross annual operating revenues, adjusted by the current Producer Price Index of Finished Goods, compared to 1986 as a base. The current figure is $5.3 million.) Anyone else is a small operator. If companies are affiliated, in the sense of Small Business Administration size regulations (see 13 CFR Part 121), their revenues are added together for purposes of determining size. For example, a group of small companies owned or controlled in common by a holding company or conglomerate would be viewed as affiliates, whose revenues would be added together to determine whether they were treated as a small or large operator for purposes of the rule.

Section 37.181 Application Dates

This rule will become effective in October 1998. It will begin applying to large entities in October 2000 and to small entities in October 2001.

Section 37.183 Purchase or Lease of New OTRBs by Operators of Fixed-Route Systems

Beginning October 2000, buses purchased or leased by large fixed-route providers must be accessible. An accessible bus is one that meets Access Board/DOT standards (i.e., in 49 CFR Part 38). This requirement applies to buses *delivered* after that date, even if they were ordered earlier. Small fixed-route providers must comply with the same requirement beginning October 2001. However, instead of complying with this requirement, a small fixed-route operator can choose to provide equivalent service to passengers with disabilities, in a vehicle (it may be an alternative vehicle) that permits a wheelchair user to ride in his or her own mobility aid. Equivalent service is defined by § 37.105. Essentially, equivalent service is service that in terms of time, destination, cost, service availability etc. is parallel to that provided non-disabled passengers. Fixed-route operators are not required to purchase accessible used buses. Retrofitting existing buses for accessibility is not required.

Section 37.185 Fleet Accessibility Requirement for OTRB Fixed-Route Systems of Large Operators

Large fixed-route operators must ensure that 50 percent of the buses used for fixed-route service are accessible by October 2006. They must ensure that 100 percent of the buses in these fleets are accessible by October 2012. However, operators can ask for a time extension past these dates. The Department will consider such requests based on the three factors listed in the rule. A bus company that had disproportionately ''stocked up'' on inaccessible buses between October 1998 and October 2000 or that had demonstrated poor compliance with the rule would not be in a position to make a strong case for a time extension.

Section 37.187 Interline Service

This section requires communication among different bus companies involved in an interline trip. The first responsibility falls on the carrier with whom the passenger initially makes a reservation or buys a ticket for an interline trip. It must communicate with the other companies involved with the trip, who have a responsibility to maintain open channels of communication and pay attention to communications they receive. The other companies retain full responsibility for actually providing service to the customer on their legs of the trip.

Section 37.189 Service Requirement for OTRB Demand-Responsive Systems

Beginning October 2001 for large entities, and October 2002 for small entities, demand-responsive operators must provide an accessible bus to any passenger who requests it 48 hours in advance. There is no requirement on demand-responsive operators to acquire their own accessible buses and no fleet accessibility requirement. Rather, when a timely request is made, the operator must find a bus and get it to the location where it is needed. Even if the request is made closer to the time of travel than 48 hours, the operator must make a reasonable effort to locate an accessible bus and provide it to the passenger.

The rule notes that an operator need not fundamentally alter its reservation policies or displace other passengers to comply with this requirement. The examples in the rule text illustrate how this principle works.

Section 37.191 Special Provision for Small Mixed-Service Operators

This provision applies only to a subset of small operators. If a small operator uses 25 percent or less of its buses for fixed-route service, with the rest being used in demand-responsive service, it can provide 48-hour advance reservation service for everything it does, fixed-route as well as demand-responsive. It would not have to obtain accessible buses of its own, beyond the extent necessary to successfully provide

advance notice service. This exception to the normal rule that advance notice service is not permitted for fixed-route service is placed in the rule in recognition of the special situation of such small mixed-service operators. Use of this provision by small mixed-service operators is optional. Their fixed-route service can also comply with this subpart by acquiring accessible buses or providing equivalent service, as provided in § 37.183(b).

Section 37.193 Interim Service Requirements

Beginning October 2001 or 2002, as applicable, a fixed-route operator must provide 48-hour advance reservation service. The operator must keep providing this service until and unless its fixed-route fleet consists entirely of accessible buses. For example, if a small operator never has a 100 percent accessible fleet, because it continues to purchase only used buses, then it must meet this interim requirement indefinitely, at least for that part of its service that is not fully accessible. For example, if a small operator has two routes, and one uses accessible buses for all trips and the other does not, interim service would be maintained only for the latter route.

Section 37.195 Purchase or Lease of OTRBs by Private Entities Not Primarily in the Business of Transporting People

This section states, for clarity, the ''private not-primariles'' are subject to the same rules as ''private primarilies'' for OTRB accessibility purposes. The NPRM stated somewhat different requirements for the two categories, and there were no comments on the subject, but for the final rule it made more sense to make the requirements parallel.

Section 37.197 Remanufactured OTRBs

There were no comments on this section of the NPRM, which is retained without change. It is drawn from remanufactured bus requirements elsewhere in part 37. We did add a note that remanufacturing an OTRB as an accessible bus would be required only in situations where a new OTRB would have to be accessible.

Section 37.199 Compensation for Failure to Provide Required Vehicles or Service

This is an accountability mechanism for advance notice and equivalent service. If an operator fails to provide the required service, then the operator must pay compensation to the passenger. This is not a civil penalty paid to the Department, but a sum sent directly to the passenger whose travel plans were disrupted. No administrative procedure is needed. For example, a passenger requests an accessible bus on Monday for a trip taking place Thursday. On Thursday, is the accessible bus at the appointed place and does its accessibility equipment operate to allow the passenger to complete his or her trip successfully? If yes, then there is no problem. If no, then the operator pays the compensation to the passenger within seven days.

The reason for the failure doesn't matter. If the operator forgot to obtain an accessible bus, or if the operator made a good faith effort and couldn't find one, or if the operator found a bus but the lift is broken, the result is the same. Compensation must be paid. Only in rare situations in which no one receives transportation, for reasons beyond the operator's control (e.g., a blizzard shuts down the East Coast, and nothing moves for two days; an accessible bus is on the way to make a timely pickup of passengers, is involved in a crash, and never makes it to the pickup point), would the operator be excused from paying compensation.

The compensation scheme is graduated. The amount of compensation increases with each failure to provide transportation. For occasion 1 with passenger A, the company pays $300. For occasion 2 with passenger B, the company pays $400, on up to $700 for the fifth and subsequent such incidents in the company's history. To help prevent the payment of compensation being regarded as simply a cost of doing business in lieu of compliance, the rule notes that payment of compensation does not immunize operators from ADA enforcement actions (e.g., litigation by the Department of Justice).

We also note that refunds of fares paid by passengers with disabilities for trips not taken as a result of an occurrence triggering the compensation requirement do not reduce the compensation requirement for carriers. For example, suppose a passenger has paid $50 in advance for a ticket, cannot travel because the operator fails to provide an accessible bus in a timely manner, and receives a $50 refund from the operator. If the operator was responsible for paying $300 compensation in this situation, the amount of compensation would still be $300, not $250.

Section 37.201 Intermediate and Rest Stops

Whenever any OTRB makes an intermediate or rest stop, at which passengers have the opportunity to get off the bus and use the facilities that are available, passengers with disabilities must have the opportunity to use the rest stop facilities. In the case of an accessible bus, this means operating the lift mechanism to allow a wheelchair user to get off and back on the bus. Under the final rule, there should be few if any situations in which a passenger is traveling in an inaccecssible bus, such that other means of boarding assistance are necessary. (There could be situations in which boarding assistance is needed for a passenger who has transferred to a vehicle seat because securement locations are filled with other passengers.) In any case, the bus company is responsible for providing whatever equipment and personnel are needed to complete these tasks and taking the time necessary to do so.

When a bus is making a lengthy express run (i.e., three hours or more without a stop) and is equipped with an inaccessible restroom, ambulatory passengers can go to the bathroom but many passengers with disabilities cannot. In this situation, if such a passenger with a disability makes a request for an unscheduled rest stop (whether at the beginning of the trip or during the trip), the bus operator must make a good faith effort to accommodate the request. Because an unscheduled rest stop can potentially disrupt schedules and connections, however, the rule does not require the bus company to make the unscheduled rest stop. This decision is discretionary with the bus company. In a situation where making the unscheduled rest stop would not unduly disrupt schedules or connections, it would fair to expect the stop to be made, however.

Bus companies sometimes, but not always, have a direct connection with the facilities at which rest stops are made. When the bus company owns, leases, controls, or has a contractual relationship with the facility for rest stop purposes, then provision of the rest stop facility is part of the service which a ticket buyer purchases. In these situations, the bus company has an obligation to ensure that the facilities meet ADA requirements.

Section 37.203 Lift Maintenance

This provision is not substantively changed from the NPRM. It requires regular and frequent maintenance checks of lifts on OTRBs. The section does not require daily tests of lifts. However, it is intended to require frequent enough checks to ensure that any problems with lift operation are caught in a timely fashion. It is also intended to ensure that, when a lift is used to help a passenger board the bus,

it is not the first time all day the lift has been operated. The section provides that a vehicle with an inoperable lift may be kept in service for up to five days from the discovery of the problem, if there is no substitute vehicle to be had. In such a situation, however, the company operating the bus with the broken lift is not excused from paying compensation under § 37.199.

Section 37.205 Additional Passengers Who Use Wheelchairs

This section concerns a situation in which there are more wheelchair users seeking to travel on a bus than there are securement locations. Passengers would be assigned to the securement locations on a first-come, first-served basis. Additional passengers would be offered an opportunity to transfer to a vehicle seat. They would board via the lift but would then have to be assisted to a vehicle seat (e.g., through use of an aisle chair). The passenger's wheelchair would be stowed in the baggage compartment, in the same way provided for in § 37.169.

If the passenger did not accept this offer, the passenger would not have to be provided transportation on the bus. Assuming an accessible bus had been provided for the trip, the bus company would not owe the passenger compensation in this case.

Section 37.207 Discriminatory Practices

This section lists several prohibited practices, reflecting concerns from disability community commenters about problems they had encountered in bus service under § 37.169. Given the provisions of the final rule, it is likely that the situations involved with service in inaccessible buses would occur very rarely, particularly after October 2001/2002 when all advance notice service will be required to take place in accessible buses.

Section 37.209 Training and Other Requirements

This section lists several sections of the Department's ADA rule that are particularly relevant to OTRB service. This is not an exclusive list. Bus operators must comply with all applicable portions of the rule. With respect to training, the section lists a number of tasks which bus company personnel must be trained to carry out properly.

Section 37.211 Effect of NHTSA and FHWA Safety Rules

This section simply recites that OTRB operators are not required to violate applicable NHTSA and FHWA safety rules. This section does not mean that bus operators can decline to provide equipment and services to passengers with disabilities because the operators believe there may be safety risks or believe that NHTSA or FHWA should issue a rulemaking on a particular subject.

Section 37.213 Information Collection Requirements

This section requires four different recordkeeping/reporting requirements. The first has to do with 48-hour advance notice and compensation. The second has to do with equivalent service and compensation. In both cases, the section requires bus operators to fill out a form when compensation has to be provided. The former section requires part of a form to be filled out and provided to the passenger when a request for advance-notice service is made.

The third has to do with reporting information on ridership on accessible fixed-route buses. Fixed-route operators would separate out data for lift boardings on 48-hour service and other service. The fourth has to do with reporting information on the purchase and lease of accessible and inaccessible new and used buses, as well as the total numbers of buses in operators' fleets.

The purposes of these information collection requirements are to provide data that the Department can use in its regulatory review (see § 37.215) and to assist in our oversight of compliance by bus companies. Comments from both bus industry and disability community commenters suggested that recordkeeping and reporting of this kind would be useful for these purposes.

These information collection requirements are subject to Office of Management and Budget (OMB) review under the Paperwork Reduction Act (PRA). The Department will subsequently submit to OMB a PRA approval request, including our estimate of the information collection burden associated with these requirements. Because the Department has not yet provided this package to OMB, we are keeping our docket open for 90 days, to ensure that interested persons have the opportunity to comment on it to the Department as well as to OMB. The Department emphasizes that this comment period concerns *only* the information collection requirements of this section. Comments on other provisions of the final rule will not be considered.

Section 37.215 Review of Requirements

This provision commits the Department to regulatory reviews of subpart H. The review would take place in 2005–2006 for rules affecting demand-responsive operators and 2006–2007 for rules affecting fixed-route operators. The review would be based in part on the information provided to the Department in the 37.213 reports. The purpose of the review would be to determine whether a mid-course correction in the provisions of the rules is appropriate (e.g., whether it would be desirable to eliminate, modify, or make more stringent certain provisions of the rule).

Chart Summarizing Final Rule, as Compared to NPRM

The following chart summarizes the provisions of the final rule, compared to the NPRM:

NPRM	Final rule
Applies to private OTRB operators beginning October 2000 (large companies) or October 2001 (small companies).	Same.
A small company is one that is not a Class I carrier (currently, a Class I carrier is one with gross operating revenues of $5.3 million or more).	Same.
Large and small companies providing fixed-route service, if purchasing or leasing a new OTRB, must acquire an accessible OTRB.	Same for large companies; small companies have the alternative of providing equivalent service.
Large and small companies providing fixed-route service must meet fleet accessibility deadlines. Deadlines are for 50% fleet accessibility by October 2006/2007 and 100% fleet accessibility by October 2012/2013. A small company does not have to meet these requirements if it does not obtain enough new buses by those dates to replace 50 or 100% of its fleet.	Same deadlines for large companies. Large companies may apply to the Secretary for a time extension if they have not obtained enough new buses by those dates to replace 50 or 100% of its fleet and meet other conditions. No fleet accessibility deadlines for small companies.

NPRM	Final rule
Large and small companies providing demand-responsive service, if purchasing or leasing new OTRBs, must obtain accessible buses unless they meet service requirements. Companies must meet 10% fleet accessibility requirement by October 2004/2005. A small operator does not have to meet this requirement if it does not obtain enough new buses by this date to replace 10% of its fleet.	Demand-responsive providers are required only to meet the service requirement.
Companies providing demand-responsive service must provide an accessible OTRB on 48 hours' advance notice. This requirement begins to apply in October 2002/2003.	Same requirement, but begins to apply in October 2001/2002.
No equivalent provision	Small mixed-service operators (75% or more of whose fleets are devoted to demand-responsive service) can meet requirements for both fixed-route and demand-responsive service through 48-hour advance notice service.
No equivalent provision	Fixed-route carriers who interline are required to send and receive information to one another to ensure that all accessible service needed for a trip is provided.
Until October 2002/2003, all companies must provide at least the interim service required by § 37.169. After those dates, fixed-route carriers with less than a 100% accessible fleet must provide at least 48-hour advance notice service as interim service.	Advance notice interim service with accessible buses begins October 2001/2002.
No equivalent provision	A bus company that fails to provide 48-hour advance notice service (e.g., demand-responsive service, interim service) or equivalent service, where required by the rule, must compensate the passenger with a disability who requested the service. Compensation amounts range from $300 to $700, depending on the number of times the bus company has failed to provide required service.
Private entities not primarily in the business of transporting people must obtain new accessible buses (fixed-route) or choose between obtaining new accessible buses and providing equivalent service (demand-responsive).	These entities must meet the same requirements as ''private primarily'' fixed-route or demand-responsive operators.
If an entity remanufactures an OTRB to extend its useful life 5 years or more, the remanufacturing must make the bus accessible, unless not technically feasible.	The requirement to remanufacture a bus to be accessible applies only in situations where a new bus would have to be accessible.
At rest stops, operator of an accessible bus would operate lift to permit passenger with a disability to get on and off the bus to use facilities. Operator of an inaccessible bus would provide boarding assistance for the same purpose, but need not unreasonably delay bus to provide this service.	At rest stops, the bus operator would have to provide needed assistance to allow passenger to use facilities. ''Unreasonable delay'' language deleted. Bus companies have obligation to ensure ADA compliance by facilities they own, lease, control or contract with. On express runs of 3 hours or more, if bus has inaccessible rest room, operator is required to make good faith effort to meet request of passenger with disability for unscheduled rest stop. The operator is not required to comply with the request, but must explain to the passenger the reason for any denial.
Bus companies must comply with §§ 37.161, 37.165–37.167, and 37.173 (concerning maintenance of other accessible features, lift and securement use, other service requirements, and training). Lift maintenance also required.	Same, but training requirements are more specific.
No equivalent provision	If there are more wheelchair users on a given bus than securement locations, bus company must offer to provide boarding assistance and transfer to a vehicle seat. If passenger declines the offer, bus operator is not required to transport the passenger on that bus.
No equivalent provision	Prohibited discriminatory actions listed (e.g., denials of service, use without passenger's consent of non-employees to provide boarding assistance).
No equivalent provision	Statement that NHTSA and FHWA safety rules apply to OTRBs.
No equivalent provision	Information collection required concerning provision of advance-notice and equivalent service and compensation, lift boardings, and bus acquisitions. The Department is seeking further comment on this provision, in connection with the Paperwork Reduction Act review process.
No equivalent provision	Department will conduct review of rule's provisions in 2005–2007.

Regulatory Analyses and Notices

This is a significant regulation under Executive Order 12866 and the Department's Regulatory Policies and Procedures, both because of its cost impacts on the industry and the strong public interest in accessibility matters. The Department has prepared a Final Regulatory Assessment to accompany the rule, which we have placed in the docket for the rulemaking. The Office of Management and Budget (OMB) has reviewed this final rule and the regulatory assessment.

Under the Regulatory Flexibility Act, this proposal is likely to have a significant economic impact on a substantial number of small entities. Indeed, all but 21 of the approximately 3500 bus companies covered by this rule are small entities. We have incorporated a Regulatory Flexibility Analysis into the regulatory assessment.

The Small Business Administration Office of Advocacy commented on the NPRM, recommending a service-based approach for small entities coupled with an accountability mechanism. The final rule includes a number of provisions

that are largely consistent with SBA recommendations:

- Small fixed-route carriers have the alternative of providing equivalent service, in lieu of obtaining accessible buses.
- Small fixed-route carriers are not subject to fleet accessibility deadlines.
- Until their fleets are 100 percent accessible, small fixed-route carriers would provide interim accessible bus service on a 48-hour advance notice basis.
- Small charter/tour carriers do not have a fleet accessibility percentage to meet and are not required to purchase accessible buses beyond what they need to meet the requirement for 48-hour advance notice service.
- Small mixed-service operators (who devote 25 percent or less of their fleets to fixed-route service) can meet all requirements through providing 48-hour advance notice service
- Small carriers do not have to obtain accessible used buses or retrofit existing buses.
- There is an accountability mechanism, of a type suggested by an association representing small carriers, for failure to meet service standards.
- The regulatory review provisions can benefit small carriers.

The Department has also placed an environmental assessment into the rulemaking docket. This rule does not have Federalism impacts under Executive Order 12612 sufficient to warrant a Federalism statement.

List of Subjects in 49 CFR Part 37

Buildings and facilities, buses, civil rights, individuals with disabilities, mass transportation, railroads, transportation.

Issued this 17th day of September, 1998, at Washington, D.C.

Rodney E. Slater,

Secretary of Transporation.

For the reasons set forth in the preamble, 49 CFR Part 37 is amended as follows:

PART 37—TRANSPORTATION SERVICES FOR INDIVIDUALS WITH DISABILITIES (ADA)

1. The authority for part 37 is revised to read as follows:

Authority: 42 U.S.C. 12101–12213; 49 U.S.C. 322.

2. Section 37.3 of part 37 is amended by adding the following definition, placed in alphabetical order with the existing definitions, to read as follows:

§ 37.3 Definitions.

* * * * *

Small operator means, in the context of over-the-road buses (OTRBs), a private entity primarily in the business of transporting people that is not a Class I motor carrier. To determine whether an operator has sufficient average annual gross transportation operating revenues to be a Class I motor carrier, its revenues are combined with those of any other OTRB operator with which it is affiliated.

* * * * *

4. A new Subpart H, consisting of §§ 37.181 through 37.215, is added to part 37, to read as follows:

Subpart H—Over-the-road Buses (OTRBs)

Sec.
37.181 Applicability dates.
37.183 Purchase or lease of new OTRBs by operators of fixed-route systems.
37.185 Fleet accessibility requirement for OTRB fixed-route systems of large operators.
37.187 Interline service.
37.189 Service requirement for OTRB demand-responsive systems.
37.191 Special provision for small mixed-service operators.
37.193 Interim service requirements.
37.195 Purchase or lease of OTRBs by private entities not primarily in the business of transporting people.
37.197 Remanufactured OTRBs.
37.199 Compensation for failure to provide required vehicles or service.
37.201 Intermediate and rest stops.
37.203 Lift maintenance.
37.205 Additional passengers who use wheelchairs.
37.207 Discriminatory practices.
37.209 Training and other requirements.
37.211 Effect of NHTSA and FHWA safety rules.
37.213 Information collection requirements.
37.215 Review of requirements.

Appendix A to Subpart H of Part 37—Forms for Advance Notice Requests and Provision of Equivalent Service

Subpart H—Over-the-Road Buses (OTRBs)

§ 37.181 Applicability dates.

This subpart applies to all private entities that operate OTRBs. The requirements of the subpart begin to apply to large operators beginning October 30, 2000 and to small operators beginning October 29, 2001.

§ 37.183 Purchase or lease of new OTRBs by operators of fixed-route systems.

The following requirements apply to private entities that are primarily in the business of transporting people, whose operations affect commerce, and that operate a fixed-route system, with respect to OTRBs delivered to them on or after the date on which this subpart applies to them:

(a) *Large operators.* If a large entity operates a fixed-route system, and purchases or leases a new OTRB for or in contemplation of use in that system, it shall ensure that the vehicle is readily accessible to and usable by individuals with disabilities, including individuals who use wheelchairs.

(b) *Small operators.* If a small entity operates a fixed-route system, and purchases or leases a new OTRB for or in contemplation of use in that system, it must do one of the following two things:

(1) Ensure that the vehicle is readily accessible to and usable by individuals with disabilities, including individuals who use wheelchairs; or

(2) Ensure that equivalent service, as defined in § 37.105, is provided to individuals with disabilities, including individuals who use wheelchairs. To meet this equivalent service standard, the service provided by the operator must permit a wheelchair user to travel in his or her own mobility aid.

§ 37.185 Fleet accessibility requirement for OTRB fixed-route systems of large operators.

Each large operator subject to the requirements of § 37.183 shall ensure that—

(a) By October 30, 2006 no less than 50 percent of the buses in its fleet with which it provides fixed-route service are readily accessible to and usable by individuals with disabilities, including individuals who use wheelchairs.

(b) By October 29, 2012, 100 percent of the buses in its fleet with which it provides fixed-route service are readily accessible to and usable by individuals with disabilities, including individuals who use wheelchairs.

(c) *Request for time extension.* An operator may apply to the Secretary for a time extension of the fleet accessibility deadlines of this section. If he or she grants the request, the Secretary sets a specific date by which the operator must meet the fleet accessibility requirement. In determining whether to grant such a request, the Secretary considers the following factors:

(1) Whether the operator has purchased or leased, since October 30, 2000, enough new OTRBs to replace 50 percent of the OTRBs with which it provides fixed-route service by October 30, 2006 or 100 percent of such OTRBs by October 29, 2012;

(2) Whether the operator has purchased or leased, between October 28, 1998 and October 30, 2000, a number of new inaccessible OTRBs significantly exceeding the number of buses it would normally obtain in such a period;

(3) The compliance with all requirements of this part by the operator

over the period between October 28, 1998 and the request for time extension.

§ 37.187 Interline service.

(a) When the general public can purchase a ticket or make a reservation with one operator for a fixed-route trip of two or more stages in which another operator provides service, the first operator must arrange for an accessible bus, or equivalent service, as applicable, to be provided for each stage of the trip to a passenger with a disability. The following examples illustrate the provisions of this paragraph (a):

Example 1. By going to Operator X's ticket office or calling X for a reservation, a passenger can buy or reserve a ticket from Point A through to Point C, transferring at intermediate Point B to a bus operated by Operator Y. Operator X is responsible for communicating immediately with Operator Y to ensure that Y knows that a passenger needing accessible transportation or equivalent service, as applicable, is traveling from Point B to Point C. By immediate communication, we mean that the ticket or reservation agent for Operator X, by phone, fax, computer, or other instantaneous means, contacts Operator Y the minute the reservation or ticketing transaction with the passenger, as applicable, has been completed. It is the responsibility of each carrier to know how to contact carriers with which it interlines (e.g., Operator X must know Operator Y's phone number).

Example 2. Operator X fails to provide the required information in a timely manner to Operator Y. Operator X is responsible for compensating the passenger for the consequent unavailability of an accessible bus or equivalent service, as applicable, on the B–C leg of the interline trip.

(b) Each operator retains the responsibility for providing the transportation required by this subpart to the passenger for its portion of an interline trip. The following examples illustrate the provisions of this paragraph (b):

Example 1. In Example 1 to paragraph (a) of this section, Operator X provides the required information to Operator Y in a timely fashion. However, Operator Y fails to provide an accessible bus or equivalent service to the passenger at Point B as the rules require. Operator Y is responsible for compensating the passenger as provided in § 37. 199.

Example 2. Operator X provides the required information to Operator Y in a timely fashion. However, the rules require Operator Y to provide an accessible bus on 48 hours' advance notice (i.e., as a matter of interim service under § 37.193(a) or service by a small mixed-service operator under § 37.191), and the passenger has purchased the ticket or made the reservation for the interline trip only 8 hours before Operator Y's bus leaves from Point B to go to Point C. In this situation, Operator Y is not responsible for providing an accessible bus to the passenger at Point B, any more than that it would be had the passenger directly contacted Operator Y to travel from Point B to Point C.

(c) All fixed-route operators involved in interline service shall ensure that they have the capacity to receive communications at all times concerning interline service for passengers with disabilities. The following examples illustrate the provisions of this paragraph (c):

Example 1. Operator Y's office is staffed only during normal weekday business hours. Operator Y must have a means of receiving communications from carriers with which it interlines (e.g., telephone answering machine, fax, computer) when no one is in the office.

Example 2. Operator Y has the responsibility to monitor its communications devices at reasonable intervals to ensure that it can act promptly on the basis of messages received. If Operator Y receives a message from Operator X on its answering machine on Friday night, notifying Y of the need for an accessible bus on Monday morning, it has the responsibility of making sure that the accessible bus is there on Monday morning. Operator Y is not excused from its obligation because no one checked the answering machine over the weekend.

§ 37.189 Service requirement for OTRB demand-responsive systems.

(a) This section applies to private entities primarily in the business of transporting people, whose operations affect commerce, and that provide demand-responsive OTRB service. Except as needed to meet the other requirements of this section, these entities are not required to purchase or lease accessible buses in connection with providing demand-responsive service.

(b) Demand-responsive operators shall ensure that, beginning one year from the date on which the requirements of this subpart begin to apply to the entity, any individual with a disability who requests service in an accessible OTRB receives such service. This requirement applies to both large and small operators.

(c) The operator may require up to 48 hours' advance notice to provide this service.

(d) If the individual with a disability does not provide the advance notice the operator requires under paragraph (a) of this section, the operator shall nevertheless provide the service if it can do so by making a reasonable effort.

(e) To meet this requirement, an operator is not required to fundamentally alter its normal reservation policies or to displace another passenger who has reserved a seat on the bus. The following examples illustrate the provisions of this paragraph (e):

Example 1. A tour bus operator requires all passengers to reserve space on the bus three months before the trip date. This requirement applies to passengers with disabilities on the same basis as other passengers. Consequently, an individual passenger who is a wheelchair user would have to request an accessible bus at the time he or she made his reservation, at least three months before the trip date. If the individual passenger with a disability makes a request for space on the trip and an accessible OTRB 48 hours before the trip date, the operator could refuse the request because all passengers were required to make reservations three months before the trip date.

Example 2. A group makes a reservation to charter a bus for a trip four weeks in advance. A week before the trip date, the group discovers that someone who signed up for the trip is a wheelchair user who needs an accessible bus, or someone who later buys a seat in the block of seats the group has reserved needs an accessible bus. A group representative or the passenger with a disability informs the bus company of this need more than 48 hours before the trip date. The bus company must provide an accessible bus.

Example 3. While the operator's normal deadline for reserving space on a charter or tour trip has passed, a number of seats for a trip are unfilled. The operator permits members of the public to make late reservations for the unfilled seats. If a passenger with a disability calls 48 hours before the trip is scheduled to leave and requests a seat and the provision of an accessible OTRB, the operator must meet this request, as long as it does not displace another passenger with a reservation.

Example 4. A tour bus trip is nearly sold out three weeks in advance of the trip date. A passenger with a disability calls 48 hours before the trip is scheduled to leave and requests a seat and the provision of an accessible OTRB. The operator need not meet this request if it will have the effect of displacing a passenger with an existing reservation. If other passengers would not be displaced, the operator must meet this request.

§ 37.191 Special provision for small mixed-service operators.

(a) For purposes of this section, a small mixed-service operator is a small operator that provides both fixed-route and demand-responsive service and does not use more than 25 percent of its buses for fixed-route service.

(b) An operator meeting the criteria of paragraph (a) of this section may conduct all its trips, including fixed-route trips, on an advance-reservation basis as provided for demand-responsive trips in § 37.189. Such an operator is not required to comply with the accessible bus acquisition/equivalent service obligations of § 37.183(b).

§ 37.193 Interim service requirements.

(a) Until 100 percent of the fleet of a large or small operator uses to provide

fixed-route service is composed of accessible OTRBs, the operator shall meet the following interim service requirements:

(1) Beginning one year from the date on which the requirements of this subpart begin to apply to the operator, it shall ensure that any individual with a disability that requests service in an accessible OTRB receives such service.

(i) The operator may require up to 48 hours' advance notice to provide this service.

(ii) If the individual with a disability does not provide the advance notice the operator requires, the operator shall nevertheless provide the service if it can do so by making a reasonable effort.

(iii) If the trip on which the person with a disability wishes to travel is already provided by an accessible bus, the operator has met this requirement.

(2) Before a date one year from the date on which this subpart applies to the operator, an operator which is unable to provide the service specified in paragraph (a) of this section shall comply with the requirements of § 37.169.

(3) Interim service under this paragraph (a) is not required to be provided by a small operator who is providing equivalent service to its fixed-route service as provided in § 37.183(b)(2).

(b) Some small fixed-route operators may never have a fleet 100 percent of which consists of accessible buses (e.g., a small fixed-route operator who exclusively or primarily purchases or leases used buses). Such an operator must continue to comply with the requirements of this section with respect to any service that is not provided entirely with accessible buses.

(c) Before a date one year from the date on which this subpart applies to an operator providing demand-responsive service, an operator which is unable to provide the service described in § 37.189 shall comply with the requirements of § 37.169.

§ 37.195 Purchase or lease of OTRBs by private entities not primarily in the business of transporting people.

This section applies to all purchases or leases of new vehicles by private entities which are not primarily engaged in the business of transporting people, with respect to buses delivered to them on or after the date on which this subpart begins to apply to them.

(a) *Fixed-route systems.* If the entity operates a fixed-route system and purchases or leases an OTRB for or in contemplation of use on the system, it shall meet the requirements of § 37.183 (a) or (b), as applicable.

(b) *Demand-responsive systems.* The requirements of § 37.189 apply to demand-responsive systems operated by private entities not primarily in the business of transporting people. If such an entity operates a demand-responsive system, and purchases or leases an OTRB for or in contemplation of use on the system, it is not required to purchase or lease an accessible bus except as needed to meet the requirements of § 37.189.

§ 37.197 Remanufactured OTRBs.

(a) This section applies to any private entity operating OTRBs that takes one of the following actions:

(1) On or after the date on which this subpart applies to the entity, it remanufactures an OTRB so as to extend its useful life for five years or more or makes a solicitation for such remanufacturing; or

(2) Purchases or leases an OTRB which has been remanufactured so as to extend its useful life for five years or more, where the purchase or lease occurs after the date on which this subpart applies to the entity and during the period in which the useful life of the vehicle is extended.

(b) In any situation in which this subpart requires an entity purchasing or leasing a new OTRB to purchase or lease an accessible OTRB, OTRBs acquired through the actions listed in paragraph (a) of this section shall, to the maximum extent feasible, be readily accessible to and usable by individuals with disabilities, including individuals who use wheelchairs.

(c) For purposes of this section, it shall be considered feasible to remanufacture an OTRB so as to be readily accessible to and usable by individuals with disabilities, including individuals who use wheelchairs, unless an engineering analysis demonstrates that including accessibility features required by this part would have a significant adverse effect on the structural integrity of the vehicle.

§ 37.199 Compensation for failure to provide required vehicles or service.

(a) Operators shall pay compensation to passengers with disabilities as provided in this section in the following situations:

(1) If a demand-responsive operator under § 37.189 or a small mixed-service operator under § 37.191 fails to provide in a timely manner an accessible OTRB to a passenger with a disability who has made a timely request for such a bus;

(2) If a fixed-route operator providing interim service under § 37.193(a)(1) fails to provide in a timely manner an accessible OTRB to a passenger with a disability who has made a timely request for such a bus;

(3) If a small fixed-route operator who chooses to provide equivalent service under § 37.183(b)(2) fails to provide equivalent service to a passenger;

(4) If required service is not provided to a passenger with a disability because accessibility equipment does not function or operator personnel do not perform essential tasks;

(5) If, for a trip involving an interline connection (see § 37.187), the operator with whom the passenger purchases the ticket or makes a reservation for the trip fails to communicate immediately with other operators providing a portion of the trip to inform them of the need for an accessible bus or equivalent service, as applicable, with the result that other operators do not provide the service required by this subpart; or

(6) If an operator required to provide interim service under § 37.169, after the date on which this subpart begins to apply to the operator, fails to provide this service.

(b) When one of the events in paragraph (a) of this section calling for compensation occurs, the operator shall pay compensation regardless of the reason for the failure to provide the required service. The only exception to this requirement is a situation in which, for reasons beyond the control of the operator, no transportation is provided to any passenger.

(c) The amount of the compensation shall be the following:

(1) On the first occasion on which the operator fails to provide the required service as provided in paragraph (a) of this section to any passenger, $300;

(2) On the second such occasion, $400;

(3) On the third such occasion, $500;

(4) On the fourth such occasion, $600;

(5) On the fifth and subsequent such occasions, $700.

(d) The operator shall provide this compensation to the passenger within seven working days of the date on which the operator failed to provide the accessible OTRB or provide equivalent service, as applicable.

(e) Payment of compensation under this section is not a defense to legal action brought against the operator to enforce the Americans with Disabilities Act or this part.

§ 37.201 Intemediate and rest stops.

(a) Whenever an OTRB makes an intermediate or rest stop, a passenger with a disability, including an individual using a wheelchair, shall be permitted to leave and return to the bus on the same basis as other passengers.

The operator shall ensure that assistance is provided to passengers with disabilities as needed to enable the passenger to get on and off the bus at the stop (e.g., operate the lift and provide assistance with securement; provide other boarding assistance if needed, as in the case of a wheelchair user who has transferred to a vehicle seat because other wheelchair users occupied all securement locations).

(b) If an OTRB operator owns, leases, or controls the facility at which a rest or intermediate stop is made, or if an OTRB operator contracts with the person who owns, leases, or controls such a facility to provide rest stop services, the OTRB operator shall ensure the facility complies fully with applicable requirements of the Americans with Disabilities Act.

(c) If an OTRB equipped with an inaccessible restroom is making an express run of three hours or more without a rest stop, and a passenger with a disability who is unable to use the inaccessible restroom requests an unscheduled rest stop, the operator shall make a good faith effort to accommodate the request. The operator is not required to make the stop. However, if the operator does not make the stop, the operator shall explain to the passenger making the request the reason for its decision not to do so.

§ 37.203 Lift maintenance.

(a) The entity shall establish a system of regular and frequent maintenance checks of lifts sufficient to determine if they are operative.

(b) The entity shall ensure that vehicle operators report to the entity, by the most immediate means available, any failure of a lift to operate in service.

(c) Except as provided in paragraph (d) of this section, when a lift is discovered to be inoperative, the entity shall take the vehicle out of service before the beginning of the vehicle's next trip and ensure that the lift is repaired before the vehicle returns to service.

(d) If there is no other vehicle available to take the place of an OTRB with an inoperable lift, such that taking the vehicle out of service before its next trip will reduce the transportation service the entity is able to provide, the entity may keep the vehicle in service with an inoperable lift for no more than five days from the day on which the lift is discovered to be inoperative.

§ 37.205 Additional passengers who use wheelchairs.

If a number of wheelchair users exceeding the number of securement locations on the bus seek to travel on a trip, the operator shall assign the securement locations on a first come-first served basis. The operator shall offer boarding assistance and the opportunity to sit in a vehicle seat to passengers who are not assigned a securement location. If the passengers who are not assigned securement locations are unable or unwilling to accept this offer, the operator is not required to provide transportation to them on the bus.

§ 37.207 Discriminatory practices.

It shall be considered discrimination for any operator to—

(a) Deny transportation to passengers with disabilities, except as provided in § 37.5(h);

(b) Use or request the use of persons other than the operator's employees (e.g., family members or traveling companions of a passenger with a disability, medical or public safety personnel) for routine boarding or other assistance to passengers with disabilities, unless the passenger requests or consents to assistance from such persons;

(c) Require or request a passenger with a disability to reschedule his or her trip, or travel at a time other than the time the passenger has requested, in order to receive transportation as required by this subpart;

(d) Fail to provide reservation services to passengers with disabilities equivalent to those provided other passengers; or

(e) Fail or refuse to comply with any applicable provision of this part.

§ 37.209 Training and other requirements.

OTRB operators shall comply with the requirements of §§ 37.161, 37.165–37.167, and 37.173. For purposes of § 37.173, ''training to proficiency'' is deemed to include, as appropriate to the duties of particular employees, training in proper operation and maintenance of accessibility features and equipment, boarding assistance, securement of mobility aids, sensitive and appropriate interaction with passengers with disabilities, handling and storage of mobility devices, and familiarity with the requirements of this subpart. OTRB operators shall provide refresher training to personnel as needed to maintain proficiency.

§ 37.211 Effect of NHTSA and FHWA safety rules.

OTRB operators are not required to take any action under this subpart that would violate an applicable National Highway Traffic Safety Administration or Federal Highway Administration safety rule.

§ 37.213 Information collection requirements.

(a) This paragraph (a) applies to demand-responsive operators under § 37.189 and fixed-route operators under § 37.193(a)(1) that are required to, and small mixed-service operators under § 37.191 that choose to, provide accessible OTRB service on 48 hours' advance notice.

(1) When the operator receives a request for accessible bus service, the operator shall complete lines 1–8 of the Form A in Appendix A to this subpart. The operator shall immediately provide a copy of the form to the passenger.

(2) On the scheduled date of the trip, the operator shall complete lines 9–11 of the form. In any case in which the requested accessible bus was not provided, the operator shall immediately provide a copy of the form to the passenger.

(3) The operator shall retain its copy of the completed form for five years. The operator shall make these forms available to Department of Transportation or Department of Justice officials at their request.

(4) Beginning October 29, 2001 for large operators, and October 28, 2002 for small operators, and on that date in each year thereafter, each operator shall submit a summary of its forms to the Department of Transportation. The summary shall state the number of requests for accessible bus service, the number of times these requests were met, and the number of times compensation was paid. It shall also include the name, address, telephone number, and contact person name for the operator.

(b) This paragraph (b) applies to small fixed-route operators who choose to provide equivalent service to passengers with disabilities under § 37.183(b)(2).

(1) The operator shall complete Form B in Appendix A to this subpart on every occasion on which a passenger with a disability needs equivalent service in order to be provided transportation.

(2) The operator shall provide one copy of the form to the passenger and retain another copy of the completed form for five years. The operator shall make these forms available to Department of Transportation or Department of Justice officials at their request.

(3) Beginning October 28, 2002, and on that date in each year thereafter, each operator shall submit a summary of its forms to the Department of Transportation. The summary shall state the number of situations in which equivalent service was needed, the number of times such service was

provided, and the number of times compensation was paid. It shall also include the name, address, telephone number, and contact person name for the operator.

(c) Beginning October 30, 2000 for large operators, and October 29, 2001 for small operators, and on that date in each year thereafter, each fixed-route operator shall submit to the Department a report on how many passengers with disabilities used the lift to board accessible buses. For fixed-route operators, the report shall reflect separately the data pertaining to 48-hour advance reservation service and other service.

(d) Each operator shall submit to the Department, October 28, 1999 and each year thereafter on that date, a summary report listing the number of new buses and used buses it has purchased or leased during the preceding year, and how many of the buses in each category are accessible. It shall also include the total number of buses in the operator's fleet and the name, address, telephone number, and contact person name for the operator.

(e) The information required to be submitted to the Department shall be sent to the following address: Bureau of Transportation Statistics, 400 7th Street, SW., Washington, DC 20590.

§ 37.215 Review of requirements.

(a) Beginning October 28, 2005, the Department will review the requirements of § 37.189 and their implementation. The Department will complete this review by October 30, 2006.

(1) As part of this review, the Department will consider factors including, but not necessarily limited to, the following:

(i) The percentage of accessible buses in the demand-responsive fleets of large and small demand-responsive operators.

(ii) The success of small and large demand-responsive operators' service at meeting the requests of passengers with disabilities for accessible buses in a timely manner.

(iii) The ridership of small and large operators' demand-responsive service by passengers with disabilities.

(iv) The volume of complaints by passengers with disabilities.

(v) Cost and service impacts of implementation of the requirements of § 37.189.

(2) The Department will make one of the following decisions on the basis of the review:

(i) Retain § 37.189 without change; or

(ii) Modify the requirements of § 37.189 for large and/or small demand-responsive operators.

(b) Beginning October 30, 2006, the Department will review the requirements of §§ 37.183, 37.185, 37.187, 37.191 and 37.193(a) and their implementation. The Department will complete this review by October 29, 2007.

(1) As part of this review, the Department will consider factors including, but not necessarily limited to, the following:

(i) The percentage of accessible buses in the fixed-route fleets of large and small fixed-route operators.

(ii) The success of small and large fixed-route operators' interim or equivalent service at meeting the requests of passengers with disabilities for accessible buses in a timely manner.

(iii) The ridership of small and large operators' fixed-route service by passengers with disabilities.

(iv) The volume of complaints by passengers with disabilities.

(v) Cost and service impacts of implementation of the requirements of these sections.

(2) The Department will make one of the following decisions on the basis of the review:

(i) Retain §§ 37.183, 37.185, 37.187, 37.191, 37.193(a) without change; or

(ii) Modify the requirements of §§ 37.183, 37.185, 37.187, 37.191, 37.193(a) for large and/or small fixed-route operators.

Appendix A to Subpart H of Part 37—Forms for Advance Notice Requests and Provision of Equivalent Service

Form A—For Use by Providers of Advance Notice Service

1. Operator's name _____
2. Address _____
_____
3. Phone number: _____
4. Passenger's name: _____
5. Address: _____
_____
6. Phone number: _____
7. Scheduled date and time of trip: _____
8. Date and time of request: _____
9. Was accessible bus provided for trip? Yes____ no____
10. Was there a basis recognized by U.S. Department of transportation regulations for not providing an accessible bus for the trip? Yes____ no____

If yes, explain _____
_____

11. If the answers to items 9 and 10 were both no, attach documentation that compensation required by department of transportation regulations was paid.

Form B—For Use by Providers of Equivalent Service

1. Operator's name _____
2. Address _____
_____
3. Phone number: _____
4. Passenger's name: _____
5. Address: _____
_____
6. Phone number: _____
7. Date and time of trip: _____
8. Location of need for equivalent service:
_____
9. Was equivalent service provided for trip? Yes____ no____
10. If the answer to items 9 and 10 is no, attach documentation that compensation required by Department of Transportation regulations was paid.

[FR Doc. 98–25421 Filed 9–24–98; 2:15 pm]

BILLING CODE 4910–62–P

ARCHITECTURAL AND TRANSPORTATION BARRIERS COMPLIANCE BOARD

36 CFR Part 1192

DEPARTMENT OF TRANSPORTATION

Office of the Secretary

49 CFR Part 38

RIN 2105–AC00

Americans with Disabilities Act Accessibility Guidelines for Transportation Vehicles; Over-the-Road Buses

AGENCIES: Architectural and Transportation Barriers Compliance Board and Department of Transportation.

ACTION: Joint final rule.

SUMMARY: The Architectural and Transportation Barriers Compliance Board and the Department of Transportation amend the accessibility guidelines and standards under the Americans with Disabilities Act for over-the-road buses (OTRBs) to include scoping and technical provisions for lifts, ramps, wheelchair securement devices, and moveable aisle armrests. Revisions to the specifications for doors and lighting are also adopted. The specifications describe the design features that an OTRB must have to be readily accessible to and usable by persons who use wheelchairs or other mobility aids. The Department of Transportation has published a separate rule elsewhere in today's **Federal Register** which addresses when OTRB operators are required to comply with the specifications.

EFFECTIVE DATE: October 28, 1998.

FOR FURTHER INFORMATION CONTACT: *Access Board:* Dennis Cannon, Office of Technical and Information Services, Architectural and Transportation Barriers Compliance Board, 1331 F Street, NW., suite 1000, Washington, DC 20004–1111. Telephone number (202)

272–5434 extension 35 (voice); (202) 272–5449 (TTY). Electronic mail address: cannon@access-board.gov.

Department of Transportation: Robert C. Ashby, Deputy Assistant General Counsel for Regulation and Enforcement, Department of Transportation, 400 7th Street SW., room 10424, Washington, DC 20590. Telephone (202) 366–9306 (voice) or (202) 755–7687 (TTY).

The telephone numbers listed above are not toll-free numbers.

SUPPLEMENTARY INFORMATION:

Availability of Copies and Electronic Access

Single copies of this publication may be obtained at no cost by calling the Access Board's automated publications order line (202) 272–5434, by pressing 1 on the telephone keypad, then 1 again, and requesting publication S–22 (Over-the-Road Buses Final Rule). Persons using a TTY should call (202) 272–5449. Please record a name, address, telephone number and request publication S–22. This document is available in alternate formats upon request. Persons who want a copy in an alternate format should specify the type of format (cassette tape, Braille, large print, or computer disk). This document is also available on the Board's Internet site (http://www.access-board.gov/rules/otrbfinl.htm).

Background

Under the Americans with Disabilities Act of 1990 (ADA), the Architectural and Transportation Barriers Compliance Board (Access Board) is responsible for developing guidelines to ensure that the various kinds of transportation vehicles covered by the law are readily accessible to and usable by individuals with disabilities.[1] 42 U.S.C. 12204.

The Department of Transportation (DOT), which is responsible for issuing regulations to implement the transportation provisions of the ADA, is required to include in its regulations accessibility standards for vehicles that are consistent with the Access Board's guidelines. 42 U.S.C. 12186.

For purposes of the ADA, an over-the-road bus (OTRB) is ''a bus characterized by an elevated passenger deck located over a baggage compartment.'' 42 U.S.C. 12181(5). The ADA provides for rulemaking to establish accessibility requirements for OTRBs operated by private entities to be conducted in two stages: interim requirements and final requirements. 42 U.S.C. 12186.[2]

The interim requirements were established in 1991 and do not require any structural changes to OTRBs. The Access Board issued accessibility guidelines for OTRBs that provided technical specifications for non-structural design features such as floor surfaces, lighting, and handrails and stanchions. 36 CFR 1192.151 to 1192.157. The DOT adopted these guidelines as its standards and also established interim requirements for providing boarding assistance and accommodating wheelchairs and other mobility aids. 49 CFR 37.169 and 49 CFR 38.151 to 38.157.

Prior to establishing the final requirements, the Office of Technology Assessment was to study issues related to OTRB accessibility. 42 U.S.C. 12185. The Office of Technology Assessment published its study on May 16, 1993. Requirements for accessibility were to have taken effect by July 26, 1996, for large transportation providers, and one year later for small entities. 42 U.S.C. 12186. The National Highway System Designation Act of 1995 (Pub. L. 104–59), amended section 306(a)(2)(B)(iii) of the ADA by removing the specific compliance dates and instead requiring large transportation providers to comply two years after the issuance of the DOT regulation, and small providers to comply three years after issuance.

As a preliminary step to issuing final requirements, the Access Board and the DOT held a workshop in Washington, DC on October 21 and 22, 1993, to discuss issues related to OTRB accessibility. About 30 representatives of the OTRB industry and disability organizations attended the workshop. At the workshop, it was announced that the Access Board and the DOT were considering amending the accessibility guidelines and standards for OTRBs to include technical specifications for:

- lifts, ramps, and wheelchair securement devices based on existing requirements for other buses in 36 CFR 1192.23 and 49 CFR 38.23;
- accessible restrooms based on existing requirements for commuter and intercity rail cars in 36 CFR 1192.107 and 1192.123, and 49 CFR 38.107 and 38.123; and
- front door width, overhead clearance for doors with lifts or ramps, and step riser height and tread depth.

On March 25, 1998, the Access Board and the DOT issued a joint notice of proposed rulemaking (NPRM) to amend the accessibility guidelines and standards for OTRBs, as discussed at the workshop. (63 FR 14571). The NPRM also proposed to revise the exterior lighting specification for OTRBs and other buses based on an equivalent facilitation determination made by the DOT.

The DOT published a separate NPRM in the same **Federal Register** which addressed when OTRB operators would be required to comply with those specifications. (63 FR 14560).

Section-by-Section Analysis

A total of 14 comments were received by the Board in response to the NPRM. One comment dealt only with issues raised by the Department of Transportation's NPRM and did not address any items under consideration by the Board. A comment submitted by a public transit operator wanted changes in the number of wheelchair or mobility aid seating locations for a 96-inch wide bus. However, public operators are subject to section ____.23, which was not the subject of this rulemaking. A manufacturer of urban transit buses was concerned that some of the provisions would apply to such buses and wanted a change in the definition of an OTRB. A manufacturer of OTRBs also suggested a change in the definition because it claimed the current definition would not include a 45-foot OTRB. In fact, the definition at 49 CFR 37.3 does not reference any length.[3] Since the definition of an OTRB is statutory, the Board has not changed it. Also, since accessible restrooms will not be required, the proposed specifications have been moved to a new appendix section as advisory guidance. Figure 1 has been revised to conform to the text of the regulation.

Section ____.31 Lighting

This section requires that lighting be provided outside the bus door to illuminate the ground beyond the steps and lift. This section refers to urban transit buses but is being amended in

[1] The Access Board is an independent Federal agency established by section 502 of the Rehabilitation Act of 1973, as amended, whose primary mission is to promote accessibility for individuals with disabilities. The Access Board consists of 25 members. Thirteen are appointed by the President from among the public, a majority of whom are required to be individuals with disabilities. The other twelve are heads of the following Federal agencies or their designees whose positions are Executive Level IV or above: The Departments of Health and Human Services, Education, Transportation, Housing and Urban Development, Labor, Interior, Defense, Justice, Veterans Affairs, and Commerce; General Services Administration; and United States Postal Service.

[2] OTRBs purchased by public entities or by a contractor to a public entity must currently meet the same accessibility requirements as do other buses, including requirements for lifts or ramps and wheelchair securement devices. 49 CFR 37.7(c).

[3] The definition in the Department of Transportation regulation states ''Over-the-road bus means a bus characterized by an elevated passenger deck over a baggage compartment.'' The definition of ''Bus'' includes some examples which in no way limit the scope of the definition. 49 CFR 37.3.

this rulemaking to be consistent with section ____.157, below.

Section ____.153 Doors, Steps and Thresholds

Paragraph (a) currently requires slip-resistant surfaces and no changes were proposed.

Paragraph (b) currently requires step edge contrast and proposed to add requirements for step riser height and tread depth.

Comment. Commenters representing the interests of people with disabilities generally supported the requirements for step risers and treads, citing the benefits to some persons with mobility limitations but who would not want to use the lift. Manufacturers said that there was limited space in the vestibule and that decreasing the riser height and increasing the tread depth would require raising the first step, increasing the intrusion of steps into the aisle, interfering with structural components or steering mechanisms, decreasing baggage space, or some combination.

Response. As the NPRM explained, this proposal was similar to the proposal for urban transit buses in 1991, which was not adopted. At that time, the Board was convinced that the requirements were not practicable. However, as the NPRM pointed out, there have been some significant changes in urban transit bus design in the intervening years and the Board asked whether there had been similar changes in OTRB design that would make the provisions feasible. The documentation supplied has convinced the Board that changes which have occurred have not been such that meeting the proposed requirements is now feasible. Therefore, the proposed requirements relating to riser height and tread depth have not been included in the final rule and the provision will remain unchanged from its current specification.

Paragraph (c) specifies a minimum clear width for doors (other than doors in which lifts are installed; the width of such doors are governed by the lift width requirement) but would allow tapering above 48 inches. This paragraph also proposed to allow minimal protrusion into this clear opening by hinges or operating mechanisms, provided such protrusions were between specified heights.

Comment. Manufacturers said that some buses could achieve a 30-inch front door opening while others could only achieve a 27-inch opening, which is the current requirement. They pointed out that the width was a function of approach angle, front axle location (which could affect axle weight loading), and bus length. They also said that the rule should not prescribe hinge location, as this could restrict design options.

Response. Achieving the widest possible door is desirable because some individuals with mobility limitations need to swing their legs to the side to mount steps. This typically occurs when entering or exiting the door itself, since once through the door, persons who use crutches or walkers usually hold the stepwell handrails rather than using their mobility aids while climbing the steps. While lifts are required to accommodate standees, the height of an OTRB floor may make the use of the lift problematic for some persons. Therefore, the front door should be as usable as possible. On the other hand, the Board recognizes that there are technical difficulties in providing wider front doors in all cases. Therefore, the final rule has been modified from the proposal to specify a 30-inch door whenever possible, but has included an exception where this is not feasible. An appendix note has been added to indicate the factors which would indicate what constitutes infeasibility. Also, the references to hinge height have been removed.

Paragraph (d) has been added to specify a minimum lift door height. The NPRM specified a minimum height of 68 inches, measured from the highest point of the lift to the door header.

Comment. Disability organizations supported this provision as needed to accommodate standees who would be unable to use the front door steps. Manufacturers said that the door height should be measured from the door sill rather than the highest point of the lift platform, as proposed. They pointed out that the platform would vary in height depending on load. For example, when unloaded, the platform is designed to be higher than the sill so that a wheelchair user exiting the bus would be going slightly up, increasing the feeling of security. Even a slight ''drop'' at the sill might be unsettling, they said.

Also, there are different models of OTRBs with characteristics designed to meet specific needs. The largest buses, used primarily for sightseeing tours, could almost meet the requirement. However, there are other models designed to operate where overhead clearance is restricted by bridges, tunnels or other facilities. These vehicles must have a lower roof height and, therefore, could not achieve the proposed door height. Still other models are designed primarily for ''line haul'' transportation. These vehicles have a roof height nearly as high as the largest bus but a slightly higher floor to decrease the interior volume and increase luggage space. This reduces the space which must be air conditioned and, thus, improves fuel efficiency.

Response. The final rule specifies that the measurement is to be taken from the door sill and specifies a 65-inch minimum. All dimensions are subject to the dimensional tolerances allowed by section ____.4(b), consistent with significant figures and rounding conventions.

Section ____.157 Lighting

This section requires that lighting be provided outside the bus door to illuminate the ground beyond the steps and lift.

Comment. A manufacturer pointed out that the typical sedan door on an OTRB would block part of the light so that the proposed requirement to illuminate the area for three feet from ''all points'' perpendicular to the step would not be practicable.

Response. The phrase ''all points'' has been removed from the final provision, both here and in section ____.31. A clarification has also been added since the provision applies to doorways in which lifts or ramps are installed. The provision was originally written to apply to urban transit buses in which the lift or ramp is normally installed in a door which also includes steps. Since the lift on an OTRB is installed in a separate door, the proposed reference to illumination perpendicular to the step tread has no meaning. Therefore, the provision has been clarified to apply the illumination requirement to the lift as well.

Section ____.159 Mobility Aid Accessibility

This section provides the technical requirements for lifts, ramps and securement systems.

Paragraph (a) provides the general scoping for the requirements of the following paragraphs. It specifies the number of securement locations to be provided and requires sufficient clearances to allow a wheelchair or mobility aid user to reach a securement location. Also, an exception allows a station-based lift that meets the same requirements as would apply to a lift mounted on the vehicle.

Comment. An individual with a disability said that the maneuvering clearance required should be spelled out since his experience with his city's buses was that there is insufficient room to maneuver past the driver position.

Response. Unlike urban transit buses, lifts on OTRBs are not installed in the front door. A separate door is provided in the side of the bus so a lift user does

not need to negotiate the aisle beside the driver. Therefore, the proposed provision is deemed adequate and no change has been made for the final rule.

Comment. A commenter objected to the inclusion of the exception allowing a station-based lift on safety grounds because no lift would be present on the bus if it stopped at a location other than the station.

Response. This exception is expected to be of limited use. It would only apply to the case in which an OTRB traveled solely between specific stations where the station-based lifts were deployed. This might occur, for example, where a bus provides a scenic trip through a park area and only picks up and discharges passengers at a visitors' center, scenic overlook, restaurant or similar locations, but does not operate outside the park. The Board expects this situation to be rare but the option of a station-based lift may provide some cost saving and is, therefore, worth preserving. The exception has been retained in the final rule.

Paragraph (b) provides the technical specifications for lifts.

Comment. A commenter suggested that the outer barrier should be five inches high.

Response. No rationale was provided for the recommendation. The proposal contains a performance requirement that a common wheelchair or mobility aid be prevented from rolling off the lift platform whenever the platform is three inches or more off the ground. The performance requirement is sufficient and no change has been made in the final rule.

Comment. One commenter said the lift platform should be prohibited from blocking the window at the securement location.

Response. Such a requirement might preclude the use of some lifts. Since the NPRM did not propose this requirement, there was no opportunity for comment. Therefore, the final rule does not include such a requirement. An appendix note has been added to alert designers to this concern.

Paragraph (c) provides technical requirements for ramps.

No comments were received on this paragraph and no changes have been made.

Paragraph (d) provides technical requirements for wheelchair and mobility aid securement.

Comment. Two comments expressed concerns about the safety of the proposed securement requirements for OTRBs which travel at highway speeds. One of these suggested that the Department of Transportation not adopt any requirements for transporting wheelchairs on OTRBs until a comprehensive study is conducted.

In connection with this section, the NPRM asked whether seats in OTRBs were required to meet safety standards different from those of urban transit buses. One manufacturer responded saying the requirements were the same.

Response. Neither of the comments which expressed safety concerns provided any data to substantiate such a concern. Accessible OTRBs have been in service in the United States and around the world for many years. The Board is not aware of any problems with the securement systems.

Actually, it is not the speed of the vehicle which is critical but the deceleration experienced when the vehicle stops suddenly. The heavier the vehicle, the slower it will come to a stop and, thus, the lower the deceleration. For this reason, the securement requirements for vans and small buses are higher than for large urban transit buses. OTRBs are heavier still. In fact, no securement of any kind is required for trains and rail vehicles, which may reach speeds as high as 150 miles per hour.

The securement requirement for urban transit buses was derived from the requirements for seats in general. That is, the force requirements were designed to restrain a wheelchair or mobility aid to the same extent as the general passenger seats are required to be anchored to the bus by motor vehicle safety standards. Since the seats in OTRBs are subject to the same requirements as urban transit buses, there does not appear to be any reason to apply a different standard to securement systems in such vehicles. Consequently, the provision has not been changed and the Board sees no evidence to suggest that the requirement should be deferred.

Section ____.161 Moveable Aisle Armrests

This section requires that at least 50% of aisle armrests be moveable to allow persons with mobility limitations to enter and exit the seats easier.

Comment. The NPRM asked whether moveable aisle armrests should be required to be provided and, if so, where and how many. Disability organizations supported a requirement and wanted all aisle armrests to be moveable. One organization said that it preferred all but no less than 50%, similar to the regulations under the Air Carrier Access Act regulations. A manufacturer said that it provided all aisle seats with moveable armrests as a standard feature.

Response. The Board has decided to require that a minimum of 50% of the aisle seats, including all those removable or moveable seats at securement locations have moveable armrests.

Regulatory Process Matters

This final rule is jointly issued by the Access Board and the DOT to amend the accessibility guidelines and standards for OTRBs by adding technical specifications for lifts, ramps, wheelchair securement devices, and movable aisle armrests. The final rule also revises technical specifications for doors and lighting. DOT has published a separate final rule in today's **Federal Register** which addresses when OTRB operators are required to comply with the technical specifications. The final rules are closely related and the Access Board and the DOT have treated them as a single regulatory action for purposes of Executive Order 12866 and the Regulatory Flexibility Act in order to avoid duplicative or unnecessary analyses. The final rules are a significant regulatory action under Executive Order 12866 and DOT's Regulatory Policies and Procedures. DOT has prepared a Regulatory Impact Analysis (RIA), which is summarized in the separate final rule the DOT has published in today's **Federal Register**. The Office of Management and Budget has reviewed both final rules.

The final rules are likely to have a significant impact on a substantial number of small entities. DOT has incorporated a Regulatory Flexibility Analysis into the RIA and has included provisions in the separate final rule published in today's **Federal Register** to reduce the burden on small OTRB operators.

Text of Final Common Rule

The text of the final common rule amendments to 36 CFR part 1192 and 49 CFR part 38 appear below.

1. Section ____.31 is amended by revising paragraph (c) to read as follows:

§ ____.31 Lighting.

* * * * *

(c) The vehicle doorways, including doorways in which lifts or ramps are installed, shall have outside light(s) which, when the door is open, provide at least 1 foot-candle of illumination on the street surface for a distance 3 feet (915 mm) perpendicular to the bottom step tread or lift outer edge. Such light(s) shall be shielded to protect the eyes of entering and exiting passengers.

2. Section ____.153 is amended by revising paragraph (c) and by adding paragraph (d) to read as follows:

§ ____.153 Doors, steps and thresholds.

* * * * *

(c)(1) Doors shall have a minimum clear width when open of 30 inches (760 mm), measured from the lowest step to a height of at least 48 inches (1220 mm), from which point they may taper to a minimum width of 18 inches (457 mm). The clear width may be reduced by a maximum of 4 inches (100 mm) by protrusions of hinges or other operating mechanisms.

(2) *Exception.* Where compliance with the door width requirement of paragraph (c)(1) of this section is not feasible, the minimum door width shall be 27 in (685 mm).

(d) The overhead clearance between the top of the lift door opening and the sill shall be the maximum practicable but not less than 65 inches (1651 mm).

3. Section ____.157 is amended by revising paragraph (b) to read as follows:

§ ____.157 Lighting.

* * * * *

(b) The vehicle doorway shall have outside light(s) which, when the door is open, provide at least 1 foot-candle of illumination on the pathway to the door for a distance of 3 feet (915 mm) to the bottom step tread or lift outer edge. Such light(s) shall be shielded to protect the eyes of entering and exiting passengers.

4. Section ____.159 is revised to read as follows:

§ ____.159 Mobility aid accessibility.

(a)(1) *General.* All vehicles covered by this subpart shall provide a level-change mechanism or boarding device (e.g., lift or ramp) complying with paragraph (b) or (c) of this section and sufficient clearances to permit a wheelchair or other mobility aid user to reach a securement location. At least two securement locations and devices, complying with paragraph (d) of this section, shall be provided.

(2) *Exception.* If portable or station-based lifts, ramps or bridge plates meeting the applicable requirements of this section are provided at stations or other stops required to be accessible under regulations issued by the Department of Transportation, the bus is not required to be equipped with a vehicle-borne device.

(b) *Vehicle lift*—(1) *Design load.* The design load of the lift shall be at least 600 pounds (2665 N). Working parts, such as cables, pulleys, and shafts, which can be expected to wear, and upon which the lift depends for support of the load, shall have a safety factor of at least six, based on the ultimate strength of the material. Nonworking parts, such as platform, frame and attachment hardware which would not be expected to wear, shall have a safety factor of at least three, based on the ultimate strength of the material.

(2) *Controls*—(i) *Requirements.* The controls shall be interlocked with the vehicle brakes, transmission, or door, or shall provide other appropriate mechanisms or systems, to ensure that the vehicle cannot be moved when the lift is not stowed and so the lift cannot be deployed unless the interlocks or systems are engaged. The lift shall deploy to all levels (i.e., ground, curb, and intermediate positions) normally encountered in the operating environment. Where provided, each control for deploying, lowering, raising, and stowing the lift and lowering the roll-off barrier shall be of a momentary contact type requiring continuous manual pressure by the operator and shall not allow improper lift sequencing when the lift platform is occupied. The controls shall allow reversal of the lift operation sequence, such as raising or lowering a platform that is part way down, without allowing an occupied platform to fold or retract into the stowed position.

(ii) *Exception.* Where the lift is designed to deploy with its long dimension parallel to the vehicle axis and which pivots into or out of the vehicle while occupied (i.e., ''rotary lift''), the requirements of this paragraph (b)(2) prohibiting the lift from being stowed while occupied shall not apply if the stowed position is within the passenger compartment and the lift is intended to be stowed while occupied.

(3) *Emergency operation.* The lift shall incorporate an emergency method of deploying, lowering to ground level with a lift occupant, and raising and stowing the empty lift if the power to the lift fails. No emergency method, manual or otherwise, shall be capable of being operated in a manner that could be hazardous to the lift occupant or to the operator when operated according to manufacturer's instructions, and shall not permit the platform to be stowed or folded when occupied, unless the lift is a rotary lift and is intended to be stowed while occupied.

(4) *Power or equipment failure.* Platforms stowed in a vertical position, and deployed platforms when occupied, shall have provisions to prevent their deploying, falling, or folding any faster than 12 inches/second (305 mm/sec) or their dropping of an occupant in the event of a single failure of any load carrying component.

(5) *Platform barriers.* The lift platform shall be equipped with barriers to prevent any of the wheels of a wheelchair or mobility aid from rolling off the platform during its operation. A movable barrier or inherent design feature shall prevent a wheelchair or mobility aid from rolling off the edge closest to the vehicle until the platform is in its fully raised position. Each side of the lift platform which extends beyond the vehicle in its raised position shall have a barrier a minimum 1½ inches (13 mm) high. Such barriers shall not interfere with maneuvering into or out of the aisle. The loading-edge barrier (outer barrier) which functions as a loading ramp when the lift is at ground level, shall be sufficient when raised or closed, or a supplementary system shall be provided, to prevent a power wheelchair or mobility aid from riding over or defeating it. The outer barrier of the lift shall automatically raise or close, or a supplementary system shall automatically engage, and remain raised, closed, or engaged at all times that the platform is more than 3 inches (75 mm) above the roadway or sidewalk and the platform is occupied. Alternatively, a barrier or system may be raised, lowered, opened, closed, engaged, or disengaged by the lift operator, provided an interlock or inherent design feature prevents the lift from rising unless the barrier is raised or closed or the supplementary system is engaged.

(6) *Platform surface.* The platform surface shall be free of any protrusions of ¼ inch (6.5 mm) high and shall be slip resistant. The platform shall have a minimum clear width of 28½ inches (725 mm) at the platform, a minimum clear width of 30 inches (760 mm) measured from 2 inches (50 mm) above the platform surface to 30 inches (760 mm) above the platform, and a minimum clear length of 48 inches (1220 mm) measured from 2 inches (50 mm) above the surface of the platform to 30 inches (760 mm) above the surface of the platform. (See Figure 1 to this part.)

(7) *Platform gaps.* Any openings between the platform surface and the raised barriers shall not exceed ⅝ inch (16 mm) in width. When the platform is at vehicle floor height with the inner barrier (if applicable) down or retracted, gaps between the forward lift platform edge and the vehicle floor shall not exceed ½ inch (13 mm) horizontally and ⅝ inch (16 mm) vertically. Platforms on semi-automatic lifts may have a hand hold not exceeding 1½ inches (28 mm) by 4½ inches (113 mm) located between the edge barriers.

(8) *Platform entrance ramp.* The entrance ramp, or loading-edge barrier used as a ramp, shall not exceed a slope of 1:8, measured on level ground, for a maximum rise of 3 inches (75 mm), and

the transition from roadway or sidewalk to ramp may be vertical without edge treatment up to ¼ inch (6.5 mm) . Thresholds between ¼ inch (6.5 mm) and ½ inch (13 mm) high shall be beveled with a slope no greater than 1:2.

(9) *Platform deflection.* The lift platform (not including the entrance ramp) shall not deflect more than 3 degrees (exclusive of vehicle roll or pitch) in any direction between its unloaded position and its position when loaded with 600 pounds (2665 N) applied through a 26 inch (660 mm) by 26 inch test pallet at the centroid of the platform.

(10) *Platform movement.* No part of the platform shall move at a rate exceeding 6 inches/second (150 mm/sec) during lowering and lifting an occupant, and shall not exceed 12 inches/second (300 mm/sec) during deploying or stowing. This requirement does not apply to the deployment or stowage cycles of lifts that are manually deployed or stowed. The maximum platform horizontal and vertical acceleration when occupied shall be 0.3g.

(11) *Boarding direction.* The lift shall permit both inboard and outboard facing of wheelchair and mobility aid users.

(12) *Use by standees.* Lifts shall accommodate persons using walkers, crutches, canes or braces or who otherwise have difficulty using steps. The platform may be marked to indicate a preferred standing position.

(13) *Handrails.* Platforms on lifts shall be equipped with handrails on two sides, which move in tandem with the lift, and which shall be graspable and provide support to standees throughout the entire lift operation. Handrails shall have a usable component at least 8 inches (200 mm) long with the lowest portion a minimum 30 inches (760 mm) above the platform and the highest portion a maximum 38 inches (965 mm) above the platform. The handrails shall be capable of withstanding a force of 100 pounds (445 N) concentrated at any point on the handrail without permanent deformation of the rail or its supporting structure. The handrail shall have a cross-sectional diameter between 1¼ inches (32 mm) and 1½ inches (38 mm) or shall provide an equivalent grasping surface, and have eased edges with corner radii of not less than ⅝ inch (3.5 mm). Handrails shall be placed to provide a minimum 1½ inches (38 mm) knuckle clearance from the nearest adjacent surface. Handrails shall not interfere with wheelchair or mobility aid maneuverability when entering or leaving the vehicle.

(c) *Vehicle ramp*—(1) *Design load.* Ramps 30 inches (760 mm) or longer shall support a load of 600 pounds (2665 N), placed at the centroid of the ramp distributed over an area of 26 inches by 26 inches (660 mm by 660 mm), with a safety factor of at least 3 based on the ultimate strength of the material. Ramps shorter than 30 inches (760 mm) shall support a load of 300 pounds (1332 N).

(2) *Ramp surface.* The ramp surface shall be continuous and slip resistant; shall not have protrusions from the surface greater than ¼ inch (6.5 mm) high; shall have a clear width of 30 inches (760 mm); and shall accommodate both four-wheel and three-wheel mobility aids.

(3) *Ramp threshold.* The transition from roadway or sidewalk and the transition from vehicle floor to the ramp may be vertical without edge treatment up to ¼ inch (6.5 mm). Changes in level between ¼ inch (6.5 mm) and ½ inch (13 mm) shall be beveled with a slope no greater than 1:2.

(4) *Ramp barriers.* Each side of the ramp shall have barriers at least 2 inches (50 mm) high to prevent mobility aid wheels from slipping off.

(5) *Slope.* Ramps shall have the least slope practicable and shall not exceed 1:4 when deployed to ground level. If the height of the vehicle floor from which the ramp is deployed is 3 inches (75 mm) or less above a 6 inch (150 mm) curb, a maximum slope of 1:4 is permitted; if the height of the vehicle floor from which the ramp is deployed is 6 inches (150 mm) or less, but greater than 3 inches (75 mm), above a 6 inch (150 mm) curb, a maximum slope of 1:6 is permitted; if the height of the vehicle floor from which the ramp is deployed is 9 inches (225 mm) or less, but greater than 6 inches (150 mm), above a 6 inch curb, a maximum slope of 1:8 is permitted; if the height of the vehicle floor from which the ramp is deployed is greater than 9 inches (225 mm) above a 6 inch (150 mm) curb, a slope of 1:12 shall be achieved. Folding or telescoping ramps are permitted provided they meet all structural requirements of this section.

(6) *Attachment.* When in use for boarding or alighting, the ramp shall be firmly attached to the vehicle so that it is not subject to displacement when loading or unloading a heavy power mobility aid and that no gap between vehicle and ramp exceeds ⅝ inch (16 mm).

(7) *Stowage.* A compartment, securement system, or other appropriate method shall be provided to ensure that stowed ramps, including portable ramps stowed in the passenger area, do not impinge on a passenger's wheelchair or mobility aid or pose any hazard to passengers in the event of a sudden stop or maneuver.

(8) *Handrails.* If provided, handrails shall allow persons with disabilities to grasp them from outside the vehicle while starting to board, and to continue to use them throughout the boarding process, and shall have the top between 30 inches (760 mm) above the ramp surface. The handrails shall be capable of withstanding a force of 100 pounds (445 N) concentrated at any point on the handrail without permanent deformation of the rail or its supporting structure. The handrail shall have a cross-sectional diameter between 1¼ inches (32 mm) and 1½ inches (38 mm) or shall provide an equivalent grasping surface, and have eased edges with corner radii of not less than ⅛ inch (3.5 mm). Handrails shall not interfere with wheelchair or mobility aid maneuverability when entering or leaving the vehicle.

(d) *Securement devices*—(1) *Design load.* Securement systems, and their attachments to vehicles, shall restrain a force in the forward longitudinal direction of up to 2,000 pounds (8,880 N) per securement leg or clamping mechanism and a minimum of 4,000 pounds (17,760 N) for each mobility aid.

(2) *Location and size.* The securement system shall be placed as near to the accessible entrance as practicable and shall have a clear floor area of 30 inches (760 mm) by 48 inches (1220 mm). Such space shall adjoin, and may overlap, an access path. Not more than 6 inches (150 mm) of the required clear floor space may be accommodated for footrests under another seat, modesty panel, or other fixed element provided there is a minimum of 9 inches (230 mm) from the floor to the lowest part of the seat overhanging the space. Securement areas may have fold-down seats to accommodate other passengers when a wheelchair or mobility aid is not occupying the area, provided the seats, when folded up, do not obstruct the clear floor space required. (See Figure 2 to this part.)

(3) *Mobility aids accommodated.* The securement system shall secure common wheelchairs and mobility aids and shall either be automatic or easily attached by a person familiar with the system and mobility aid and having average dexterity.

(4) *Orientation.* At least one securement device or system required by paragraph (a) of this section shall secure the wheelchair or mobility aid facing toward the front of the vehicle. Additional securement devices or systems shall secure the wheelchair or mobility aid facing forward or rearward. Where the wheelchair or mobility aid is

secured facing the rear of the vehicle, a padded barrier shall be provided. The padded barrier shall extend from a height of 38 inches (965 mm) from the vehicle floor to a height of 56 inches (1420 mm) from the vehicle floor with a width of 18 inches (455 mm), laterally centered immediately in back of the seated individual. Such barriers need not be solid provided equivalent protection is afforded.

(5) *Movement.* When the wheelchair or mobility aid is secured in accordance with manufacturer's instructions, the securement system shall limit the movement of an occupied wheelchair or mobility aid to no more than 2 inches (50 mm) in any direction under normal vehicle operating conditions.

(6) *Stowage.* When not being used for securement, or when the securement area can be used by standees, the securement system shall not interfere with passenger movement, shall not present any hazardous condition, shall be reasonably protected from vandalism, and shall be readily accessed when needed for use.

(7) *Seat belt and shoulder harness.* For each wheelchair or mobility aid securement device provided, a passenger seat belt and shoulder harness, complying with all applicable provisions of the Federal Motor Vehicle Safety Standards (49 CFR part 571), shall also be provided for use by wheelchair or mobility aid users. Such seat belts and shoulder harnesses shall not be used in lieu of a device which secures the wheelchair or mobility aid itself.

5. Section ____.161 is added to subpart G to read as follows:

§ ____.161 Moveable aisle armrests.

A minimum of 50% of aisle seats, including all moveable or removable seats at wheelchair or mobility aide securement locations, shall have an armrest on the aisle side which can be raised, removed, or retracted to permit easy entry or exit.

6. A heading is added at the end of part ____ preceding the figures to read as follows:

Figures to Part ____

7. Figures 1 and 2 are revised to read as follows:

BILLING CODE 4910–62–P

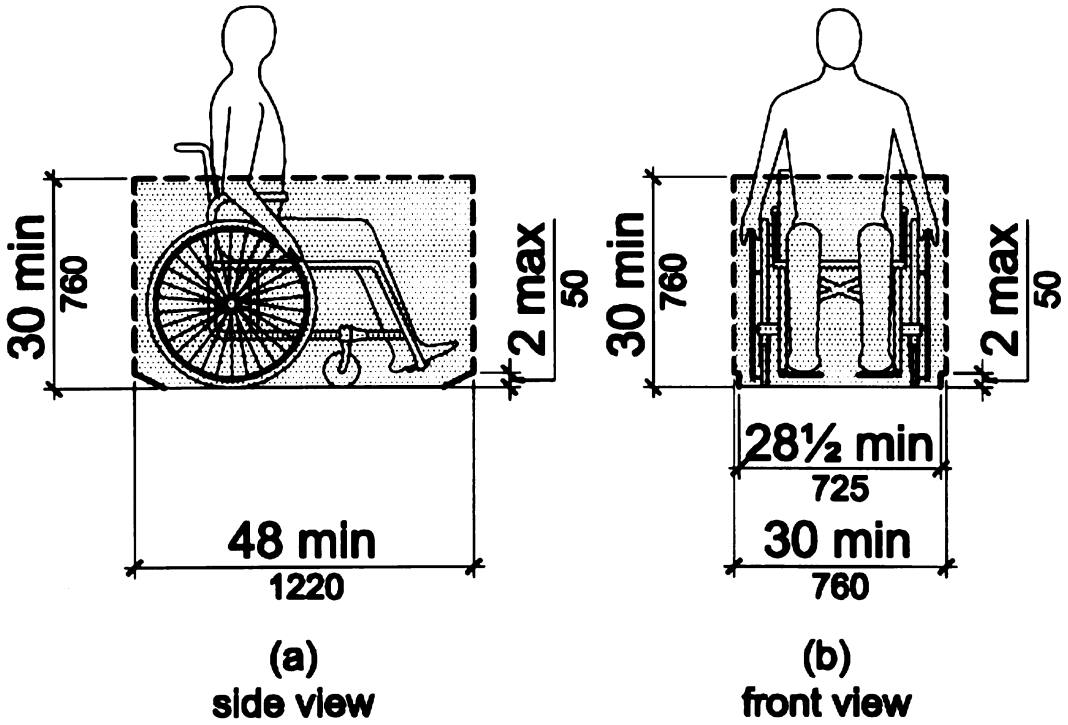

Figure 1
Wheelchair or Mobility Aid Envelope

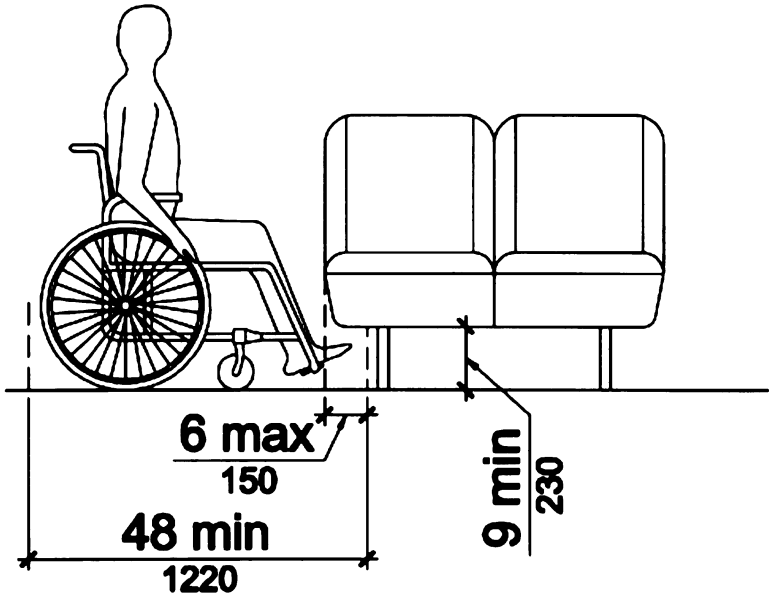

Figure 2
Toe Clearance Under a Fixed Element

BILLING CODE 4910–62–C

8. Appendix to Part ____ is amended by adding a new section VI to read as follows:

Appendix to Part ____

* * * * *

VI. Over-the-Road Buses

A. Door Width

Achieving a 30 inch wide front door on an over-the-road bus is considered not feasible if doing so would necessitate reduction of the bus approach angle, relocating the front axle rearward, or increasing the bus overall length.

B. Restrooms

The following is provided to assist manufacturers and designers to create restrooms which can be used by people with disabilities. These specifications are derived from requirements for rail vehicles and represent compromises between space needed for use and constraints imposed by vehicle dimensions. As a result, some persons with disabilities cannot use a restroom which meets these specifications and operators who do provide such restrooms should provide passengers with disabilities sufficient advance information about design so that those passengers can assess their ability to use them. Designers should provide additional space beyond these minimum specifications whenever possible.

(1) If an accessible restroom is provided, it should be designed so as to allow a person using a wheelchair or mobility aid to enter and use such restroom as specified in paragraphs (1)(a) through (e) of section VI.B of this appendix.

(a) The minimum clear floor area should be 35 inches (890 mm) by 60 inches (1525 mm). Permanently installed fixtures may overlap this area a maximum of 6 inches (150 mm), if the lowest portion of the fixture is a minimum of 9 inches (230 mm) above the floor, and may overlap a maximum of 19 inches (485 mm), if the lowest portion of the fixture is a minimum of 29 inches (740 mm) above the floor, provided such fixtures do not interfere with access to the water closet. Fold-down or retractable seats or shelves may overlap the clear floor space at a lower height provided they can be easily folded up or moved out of the way.

(b) The height of the water closet should be 17 inches (430 mm) to 19 inches (485 mm) measured to the top of the toilet seat. Seats should not be sprung to return to a lifted position.

(c) A grab bar at least 24 inches (610 mm) long should be mounted behind the water closet, and a horizontal grab bar at least 40 inches (1015 mm) long should be mounted on at least one side wall, with one end not more than 12 inches (305 mm) from the back wall, at a height between 33 inches (840 mm) and 36 inches (915 mm) above the floor.

(d) Faucets and flush controls should be operable with one hand and should not require tight grasping, pinching, or twisting of the wrist. The force required to activate controls should be no greater than 5 lbs (22.2 N). Controls for flush valves should be mounted no more than 44 inches (1120 mm) above the floor.

(e) Doorways on the end of the enclosure, opposite the water closet, should have a minimum clear opening width of 32 inches (815 mm). Door latches and hardware should be operable with one hand and should not require tight grasping, pinching, or twisting of the wrist.

(2) Accessible restrooms should be in close proximity to at least one seating location for persons using mobility aids and should be connected to such a space by an unobstructed path having a minimum width of 32 inches (815 mm).

C. Visibility Through a Window

Care should be taken so that the lift does not obscure the vision of the person occupying the securement position.

Adoption of Final Common Rule

The agency specific proposals to adopt the final common rule, which appears at the end of the common preamble, are set forth below.

Architectural and Transportation Barriers Compliance Board

36 CFR Part 1192

List of Subjects in 36 CFR Part 1192

Buses, Civil rights, Individuals with disabilities, Mass transportation, Railroads, Transportation.

Authority and Issuance

For the reasons set forth in the common preamble, part 1192 of title 36 of the Code of Federal Regulations is amended as follows:

PART 1192—AMERICANS WITH DISABILITIES ACT (ADA) ACCESSIBILITY GUIDELINES FOR TRANSPORTATION VEHICLES

1. The authority citation for 36 CFR part 1192 is revised to read as follows:

Authority: 42 U.S.C. 12204.

§ 1192.31 [Amended]

2. Section 1192.31 is amended by revising paragraph (c) to read as set forth at the end of the common preamble.

§ 1192.153 [Amended]

3. Section 1192.153 is amended by revising paragraph (c) and by adding paragraph (d) to read as set forth at the end of the common preamble.

§ 1192.157 [Amended]

4. Section 1192.157 is amended by revising paragraph (b) to read as set forth at the end of the common preamble.

§ 1192.159 [Revised]

5. Section 1192.159 is revised to read as set forth at the end of the common preamble.

§ 1192.161 [Added]

6. Section 1192.161 is added to subpart G to read as set forth at the end of the common preamble.

PART 1192 [AMENDED]

7. A heading is added at the end of part 1192 preceding the figures to read as set forth at the end of the common preamble.

8. Figures 1 and 2 are revised to read as set forth at the end of the common preamble.

Appendix to Part 1192 [Amended]

9. The appendix to Part 1192 is amended by adding section VI to read as set forth at the end of the common preamble.

Authorized by vote of the Access Board on July 15 and September 9, 1998.

Thurman M. Davis, Sr.,

Chair, Architectural and Transportation Barriers Compliance Board.

DEPARTMENT OF TRANSPORTATION

Office of the Secretary

49 CFR Part 38

List of Subjects in 49 CFR Part 38

Buses, Civil rights, Individuals with disabilities, Mass transportation, Railroads, Transportation.

Authority and Issuance

For the reasons set forth in the common preamble, part 38 of title 49 of the Code of Federal Regulations is amended as follows:

PART 38—AMERICANS WITH DISABILITIES ACT (ADA) ACCESSIBILITY SPECIFICATIONS FOR TRANSPORTATION VEHICLES

1. The authority citation for 49 CFR part 38 is revised to read as follows:

Authority: 42 U.S.C. 12101–12213; 49 U.S.C. 322.

§ 38.31 [Amended]

2. Section 38.31 is amended by revising paragraph (c) to read as set forth at the end of the common preamble.

§ 38.153 [Amended]

3. Section 38.153 is amended by revising paragraph (c) and by adding paragraph (d) to read as set forth at the end of the common preamble.

§ 38.157 [Amended]

4. Section 38.157 is amended by revising paragraph (b) to read as set forth at the end of the common preamble.

§ 38.159 [Revised]

5. Section 38.159 is revised to read as set forth at the end of the common preamble.

§ 38.161 [Added]

6. Section 38.161 is added to subpart G to read as set forth at the end of the common preamble.

PART 38 [AMENDED]

7. The existing heading preceding the figures is removed and a new heading is added at the end of part 38 preceding the figures to read as set forth at the end of the common preamble.

8. Figures 1 and 2 are revised to read as set forth at the end of the common preamble.

9. The appendix to Part 38 is amended by adding section VI to read as set forth at the end of the common preamble.

Dated: September 17, 1998.

Rodney E. Slater,

Secretary of Transportation.

[FR Doc. 98–25420 Filed 9–24–98; 2:15 pm]

BILLING CODE 8150–01–P, 4910–62–P

federal register

Monday
September 28, 1998

Part IV

Environmental Protection Agency

40 CFR Part 73

Acid Rain Program: 1998 Reallocation of Allowances; Final Rule

ENVIRONMENTAL PROTECTION AGENCY

40 CFR Part 73

[FRL –6164–1]

RIN 2060–AG86

Acid Rain Program: 1998 Reallocation of Allowances

AGENCY: Environmental Protection Agency (EPA).

ACTION: Final rule.

SUMMARY: Title IV of the Clean Air Act, as amended by the Clean Air Act Amendments of 1990, (''the Act'') authorizes the Environmental Protection Agency (''EPA'' or ''Agency'') to establish the Acid Rain Program. The purpose of the Acid Rain Program is to reduce significantly emissions of sulfur dioxide and nitrogen oxides from electric generating plants in order to reduce the adverse health and ecological impacts of acidic deposition (or acid rain) resulting from such emissions. On March 23, 1993, the Agency promulgated a final rule (''1993 rule'') allocating allowances to utility units. That rule provided the methodology for revising the allocation of allowances for utility units in 1998, as required by Title IV. On December 27, 1996, the Agency proposed changes (''1996 proposal'') to unadjusted allowances for certain units. These changes were proposed to respond to litigation over the Agency's interpretation of section 405(c) of the Act, to correct documented Agency errors in making the allocations, and to incorporate more recent information on whether or not certain new units met requirements pertaining to their construction or commencement of commercial operation. On January 7, 1998, the Agency proposed (''1998 proposal'') to revise allowance allocations using the methodology in the 1993 rule. Today's rule implements the revision methodology in the 1993 rule, based on the 1998 proposal, and incorporates final changes to unadjusted allowances based on the 1996 proposal.

DATES: This rule is effective October 28, 1998.

ADDRESSES: *Docket.* Docket No. A–97–24, containing supporting information used to develop the rule is available for public inspection and copying from 8:00 a.m. to 5:30 p.m., Monday through Friday, excluding legal holidays, at EPA's Air Docket Section (6102), Waterside Mall, Room M1500, 1st Floor, 401 M Street S.W., Washington, D.C. 20460. Information on the allowance revisions in the 1996 proposal, which are reflected in this rule, is in Docket No. A–95–56. A reasonable fee may be charged for copying.

FOR FURTHER INFORMATION CONTACT: Kathy Barylski at (202) 564–9074 or Dwight Alpern at (202) 564–9151, Acid Rain Division (6204J), U.S. Environmental Protection Agency, 401 M Street S.W., Washington, D.C. 20460; or the Acid Rain Hotline at (202) 564–9620. Electronic copies of this rulemaking and technical support documents can be accessed through the Acid Rain Division website at www.epa.gov/acidrain. These documents are also available in the Docket listed above.

SUPPLEMENTARY INFORMATION:

Judicial Review

Under section 307(b)(1) of the Act, judicial review of this rule is available only by filing a petition for review in the U.S. Court of Appeals for the District of Columbia Circuit within 60 days of today's publication of these final rule revisions. Under section 307(b)(2) of the Act, the requirements that are the subject of today's document may not be challenged in civil or criminal proceedings brought by the EPA to enforce these requirements.

I. Affected Entities

II. Background

III. Part 73: Allowances

A. Method for Revision
B. Units under Section 405(i)(2)
C. Surrender of Allowances and Return and Distribution of Allowance Auction Proceeds
D. Revision of the Repowering Reserve
E. Treatment of Allocations to Certain Units under Table B
F. Revised Tables
G. Miscellaneous

IV. National Allowance Data Base

V. Administrative Requirements

A. Executive Order 12866
B. Unfunded Mandates Act, Executive Orders 12875 and 13084
C. Paperwork Reduction Act
D. Regulatory Flexibility
E. Children's Health Protection
F. National Technology Transfer and Advancement Act
G. Submission to Congress and the General Accounting Office

I. Affected Entities

Entities potentially regulated by this action are fossil-fuel fired boilers or turbines that serve generators producing electricity for sale. Regulated categories and entities include:

Category	Examples of regulated entities
Industry	Electric service providers.

This table is not intended to be exhaustive, but rather provides a guide for readers regarding entities likely to be regulated by this action. This table lists the types of entities that EPA is now aware could potentially be regulated by this action. Other types of entities not listed in the table could also be regulated. To determine whether your facility is regulated by this action, you should carefully examine the applicability criteria in § 72.6 and the exemptions in §§ 72.7, 72.8 and 72.14 of title 40 of the Code of Federal Regulations. If you have questions regarding the applicability of this action to a particular entity, consult the persons listed in the preceding **FOR FURTHER INFORMATION CONTACT** section.

II. Background

The overall goal of the Acid Rain Program is to achieve significant environmental benefits through reductions in emissions of sulfur dioxide (SO_2) and nitrogen oxides (NO_X), the primary precursors of acid rain. To achieve this goal at the lowest cost to society, the program employs both traditional and innovative, market-based approaches for controlling air pollution. In addition, the program encourages energy efficiency and promotes pollution prevention.

Title IV of the Clean Air Act sets as a primary goal the reduction of annual SO_2 emissions by 10 million tons below 1980 levels. To achieve these SO_2 emissions reductions, the law requires a two-phase tightening of restrictions placed on fossil fuel-fired power plants. Phase I began in 1995 and affected 110 mostly coal-burning electric utility plants located in 21 eastern and midwestern states. Phase II, beginning in 2000, tightens the annual emissions limits imposed on the large, higher emitting plants regulated in Phase I and also sets restrictions on other smaller or cleaner plants fired by coal, oil, or gas. Title IV also requires certain coal-fired units to reduce their emissions of NO_X to a level achievable through installation of applicable NO_X reduction technology. (*See* 40 CFR part 76.)

The centerpiece of the Acid Rain Program is a unique trading system in which allowances (each authorizing the emission of up to one ton of SO_2) may be bought and sold at prices determined by the free market. Most existing utility units are allocated allowances based on formulas specified in the Act. Affected

utility units are required to limit SO_2 emissions to the number of allowances they hold, but because allowances are transferrable, utilities may meet their emissions control requirements in the most cost-effective manner.

This rule concerns the allocation of allowances for Phase II of the program. Phase II allowances were allocated by the 1993 rule (58 FR 15634, March 23, 1993). However, section 403(a)(1) of the Act requires EPA to publish a revised statement of allowance allocations no later than June 1, 1998. That revision must account for units eligible for allowances under section 405(g)(4) (units commencing operation from 1992 through 1995), section 405(i)(2) (units that reduce their emissions rates), and section 409 (units with approved repowering extensions). The 1993 rule established the methodology for the 1998 revision of allowance allocations, which is codified at 40 CFR § 73.11. This rulemaking implements the revision methodology.

III. Part 73: Allowances

A. Method for Revision

In order to facilitate consideration of the many issues, EPA has chosen to prepare the 1998 revision of allowance allocations in a staged approach. The 1996 proposal (61 FR 68349) was the first stage and included deletion of certain unaffected units from Table 2 of § 73.10, changes in unadjusted allowances of certain units, and deletion of units from and addition of units to Table 3 of § 73.10. The comment period ran from December 27, 1996 through February 10, 1997. The issues raised in the 1996 proposal are discussed primarily in this subsection and subsections B and C below, regarding units under section 405(i)(2) of the Act and surrender of allowances and return and distribution of allowance auction proceeds.

The second stage was the 1998 proposal (63 FR 0714). EPA proposed to follow the 1993 reallocation methodology set forth in the existing §§ 73.11 and 73.12 and apply it to the data in NADB version 2.2, which is discussed below. The technical support document explaining in detail the application of the 1998 reallocation methodology is included in the docket. Docket Item A–97–24 IV-A–02, *Technical Documentation for the 1998 Reallocation of Allowances* (hereinafter, ''Technical Documentation''). The comment period ran from January 7, 1998 through March 9, 1998. The issues raised in the 1998 proposal are discussed in subsections B, C, D, and E below, regarding units under section 405(i)(2) of the Act, surrender of allowances and return and distribution of allowance auction proceeds, the repowering reserve, and units listed under Table B of section 405(g)(2) of the Act. Also, as discussed below, the regulatory tables allocating allowances are consolidated into a single, simplified table.

Changes proposed in the first stage (the 1996 proposal) and the second stage (the 1998 proposal) (including the revised allowance allocations resulting from the application of the 1993 reallocation methodology) are finalized in today's action as one final rule, the last stage of the 1998 reallocations. In the 1996 proposal, EPA proposed to revise unadjusted allowances for certain units, to include certain units on the original allocation tables, and to delete some units from the original tables. *See* 61 FR 68340, 68355–362. The 1996 proposal included rule language that would implement these allowance-related revisions by amending specific entries in the original allowance tables (Tables 2 and 3 of § 73.10). These proposed revisions were supported by all commenters that addressed them during the comment period on the 1996 proposal. The proposal to revise the number of unadjusted basic allowances for Rodemacher unit 2 was made final in § 73.10(b)(3) on October 24, 1997. All the other proposed revisions were left to be addressed in today's final rule. 62 FR 55460, 55471 and 55486, October 24, 1997.

However, unlike the 1996 proposal which would have amended the original Tables 2 and 3 of § 73.10, the 1998 proposal would consolidate those tables into one new Table 2 and republish the entire table. Comments on the 1998 proposal supported consolidation and republishing Table 2. EPA is herein adopting that approach and is, for the reasons stated in the 1996 proposal, including in the new table all the allowance-related revisions proposed in 1996. Consequently, the proposed rule language from the 1996 proposal amending entries in the original Tables 2 and 3 is unnecessary and not adopted in today's rule. Further, because Rodemacher unit 2's revised unadjusted basic allowances that were finalized on October 24, 1997 are incorporated in the new Table 2, separate language adopted in the October 1997 rule is no longer necessary and is removed by today's rule. EPA emphasizes that Rodemacher unit 2 retains its revised unadjusted basic allowances which are reflected in the new Table 2 (see the Technical Documentation for details), rather than through a special provision amending the original Table 2.

B. Units Under Section 405(i)(2)

A few units may be eligible for a special allocation method based on eligibility requirements (which include, *inter alia*, a maximum level for the unit's actual emission rate) under section 405(i)(2). In the 1993 rule, EPA preliminarily determined that six units may be eligible and listed those units and resulting allowances in Table 4 of § 73.10(d). Further, EPA required, in § 73.19, that the actual 1997 emission rate be used to determine eligibility for section 405(i)(2) allowances.

In the 1996 proposal, EPA proposed to modify § 73.19 to use 1996 actual SO_2 emissions rate data as reported by the unit's continuous emissions monitoring system (CEMS) under part 75, rather than 1997 emissions data collected by the Energy Information Administration (EIA), to determine whether the units are eligible. In a comment on the 1996 proposal, the owner of one of the affected plants requested that the actual emission rate as of January 1, 2000 be used for determining eligibility and that, if the unit did not qualify, its additional allowances be rescinded and not reallocated. Because the comment raised a significant new option, the 1998 proposal reopened the issue of which calendar year emission rate EPA should use for the determination of eligibility and whether EPA should reallocate any unallocated allowances reserved for allocation under section 405(i)(2) to other utility units after the 1998 rulemaking.

1. Calendar Year Emission Rate

In section 405(i)(2)(B) of the Act, one criterion for eligibility is that the ''actual emissions rate is less than 1.2 lbs/mmBtu as of January 1, 2000.'' In the 1992 allowance allocation proposal (57 FR 29940, 29956, July 7, 1992), EPA concluded that the statutory phrase ''as of January 1, 2000'' meant that the calendar year 1999 emission rate should be used. However, in the 1992 proposal, EPA also discussed a perceived discrepancy between the use of the 1999 emission rate under section 405(i)(2)(B) and the mandate under section 403(a)(1) that allowance allocations be finalized no later than June 1, 1998. In the 1993 rule (58 FR 15710), EPA decided to use calendar year 1997 emission rates because 1997 would be the latest year of emissions data prior to the required final allocation in 1998.

In the 1998 proposal, EPA requested comment on three options for which calendar year of emissions rate data to use: (1) 1997, as in the 1993 rule; (2) 1999, as requested in a comment on the 1996 proposal; or (3) the first calendar

year, from 1996 up to 1999, when the unit's emissions are less than the required 1.2 lb/mmBtu rate. For all options, emissions data would be that reported using the CEMS under 40 CFR part 75.

Five comments were received on this issue. Two recommended using calendar year 1997. Three recommended option three above, the first year from 1996 through 1999 that the emissions rate is less than 1.2 lb/mmBtu. One comment also recommended that the final rule reflect the understanding that once a unit achieves an emission rate below 1.2 lb/mmBtu, it will be eligible for section 405(i)(2) allowances and no further demonstrations of eligibility will need to be made.

EPA believes that the option of using the first calendar year, from 1996 through 1999, is the best option. In contrast to the other options, this option provides an incentive to units potentially eligible for allowances under section 405(i)(2) to achieve an emission rate of less than 1.2 lb/mmBtu as soon as possible while allowing the full statutory timeframe to achieve such a rate. Further, as discussed below, Table 2 of § 73.10(b) shows the alternate allowance allocations for such units if they qualify or if they fail to qualify for section 405(i)(2) allowances. EPA maintains that this approach reasonably squares section 405(i)(2) with the requirement that EPA finalize allowance allocations in 1998. Allowances calculated for units potentially eligible under section 405(i)(2) will be held in the Allowance Tracking System and will not be available for use or transfer until the units are determined to be eligible for the allowances. If a unit becomes eligible during 1996 through 1999 for such allowances, the allowances will be made available for use or transfer. EPA review of annual CEMS data is generally completed by May following the calendar year of that data. Thus, EPA believes that the allowances could be made available by June following the year for which the eligible unit first has an emission rate of less than 1.2 lb/mmBtu. Also, as requested by the commenter, EPA is clarifying that once the unit achieves an emission rate of less than 1.2 lb/mmBtu, that unit will not be required to make further demonstrations of eligibility.

2. Unallocated Allowances

EPA also sought comment regarding whether any unallocated allowances reserved for allocation under section 405(i)(2) should be reallocated to other utility units after the 1998 rulemaking. EPA proposed that any allowances reserved for allocation under section 405(i)(2) that are not actually allocated based on 1996 through 1999 emissions should not be utilized or otherwise reallocated to other utility units. One commenter believed that this option fulfills the statutory requirements for finalized allowance allocations in 1998 and for using emissions data as of January 1, 2000. Also, the commenter pointed out that section 403(a)(1) does not require EPA to allocate exactly 8.9 million basic allowances, but no more than 8.9 million allowances. As the commenter emphasized, the allocation under section 405(i)(2) is no more than 5000 allowances, or only 0.05 percent of the unadjusted basic allowances. In the 1998 proposal, EPA noted that the administrative burden of reallocating the allowances would be considerable, due to the need to develop allowance software and to recalculate all basic allowances and refinalize Table 2 of § 73.10(b).

A number of other comments were received in this issue. One commenter agreed that reallocation was overly burdensome and not mandated in the statute. Another considered reallocation to be compelled by law but suggested that selling any remaining allowances at the annual auction (and distributing the proceeds on a pro rata basis to the utility units) would be sufficient. Another commenter recommended allocating any remaining allowances to affected ''industrial units'' that have not received allowance allocations.[1]

EPA has further analyzed section 405(i)(2) and determined that there will, in fact, be no unallocated allowances under section 405(i)(2). Thus, the question of whether or how to reallocate them is moot. Section 405(i)(2) limits the number of allowances available under the section to 5000. The only situation in which there could be unallocated allowances under section 405(i)(2) would be if the total number of allowances for which all units eligible under section 405(i)(2) qualified was less than 5000. Two units (Anclote 1 and 2) are eligible for section 405(i)(2) allowances, based on 1997 CEMS data, and would qualify for more than 5000 allowances if there were no limit on section 405(i)(2) allowances.[2] *See* Docket Item A–97–24 IV–C–01 (letter explaining basis for concluding that Anclote 1 and 2 qualify for section 405(i)(2) allowances). Thus, even if no other units qualify for section 405(i)(2) allowances, all 5000 section 405(i)(2) allowances will still be allocated and there will be no allowances remaining to reallocate or auction.

3. Allocations in Table 2

The allowance allocations for all six potentially eligible units in Table 2 will reflect section 405(i)(2) allowances calculated on the assumption that all six units will in fact be eligible for section 405(i)(2) allowances. Each unit is allocated its proportionate share of the available section 405(i)(2) allowances. Anclote units 1 and 2 have already been determined to be eligible for allowances under section 405(i)(2). As noted above, until units are determined to be eligible for allowance allocations under section 405(i)(2), their additional allowances from this section will be held in the Allowance Tracking System and will not be available for transfer. If the Monroe units are not eligible for section 405(i)(2) allowances as of January 1, 2000, additional 405(i)(2) allowances will be available to Anclote and are shown in footnote 4 of Table 2. Monroe's allowance allocations without additional allowances from section 405(i)(2) are also shown in footnote 4 of Table 2.

Footnote 4 of Table 2 of § 73.10 of the 1998 proposal did not properly reflect the effect of ineligibility by some but not all six units. The methodology used by EPA to calculate the allowances (provided in Appendix C of the Technical Documentation) correctly reflects the effect of ineligibility of units. In today's final rule, EPA is correcting footnote 4 of Table 2 to be consistent with this methodology.

C. Surrender of Allowances and Return and Distribution of Allowance Auction Proceeds

As required under section 416 of the Act and subpart E of part 73, EPA has facilitated the auction of allowances since 1993. Phase I and Phase II allowances are deducted as shown in Tables 1 and 2 of 40 CFR 73.10. Phase II deductions are calculated as a fixed percentage of each unit's unadjusted basic allowances, so the total number of allowances reserved equals 250,000. Each unit's designated representative then receives a portion of the proceeds from the auction based on the number of allowances deducted.

The 1996 proposal changed the unadjusted basic allowances for a few units, deleted many units from Tables 2 and 3 of § 73.10, and added a few units

[1] This comment is also addressed in section IV of this preamble.

[2] Anclote 1 would qualify for 4038 allowances under section 405(i)(2), and Anclote 2 would qualify for 4400 allowances, if allowances under section 405(i)(2) were not limited to 5000. In addition to the allowances for Anclote 1 and 2, Detroit Edison's Monroe 1 would be eligible for 571 allowances, Monroe 2 for 1423, Monroe 3 for 1280, and Monroe 4 for 2676.

to the Tables. The 1996 proposal stated that the designated representative of each unit to be deleted that has received an allowance allocation must surrender the allowances to the Agency and must return any proceeds received from the auction. The 1996 proposal also provided that the Agency would, in a future action, explain how the returned proceeds would be redistributed. No comments were received on the issues of the allowance surrender and return and redistribution of proceeds in the 1996 proposal.

The 1998 proposal clarified how proceeds from the auction would be distributed. In the 1998 proposal, the Agency considered the following objectives: minimization of the number of allowances and proceeds to be surrendered; minimization of any disruption to the Allowance Tracking System; and fair distribution of proceeds. The Agency recognized that five auctions had already taken place and proceeds had been distributed and that providing a complete redistribution of proceeds based on the 1996 proposal would be extremely burdensome to the Agency while providing a minimal benefit to any unit. Therefore, the Agency rejected the option of a complete redistribution of auction proceeds. However, the Agency found that providing no redistribution would be unfair for the few affected units that had their unadjusted basic allowance allocation changed or were found for the first time to be eligible to receive allocations, in the 1996 proposal.[3] Moreover, EPA explained that, as provided in the 1996 proposal, all units deleted from the tables of affected units must surrender any allowances and return any proceeds received. Very few of the units deleted had designated representatives and so were not able to transfer any allowances or receive any proceeds.

The Agency's 1998 proposal provided, for all auctions completed before the finalization of this rulemaking (including the 1998 auction) that: (1) units deleted from Table 2 of § 73.10, and units deleted from Table 3 and not added to Table 2, would surrender any allowances allocated and return any proceeds received; (2) affected units that had changes to their unadjusted basic allowance allocation would receive proceeds based on the changed allocation; and (3) the proceeds for all other units would not be changed. To implement this, the 1998 proposal provided a column in Table 2 listing the number of allowances each unit has provided for each auction taking place from 1993 through 1998 (with modifications from the original Tables 2 and 3 for the 17 units listed in footnote 3 above and for units deleted from Tables 2 or 3). References in proposed § 73.27 to allowances deducted for auctions before June 1, 1998 cited this new column. Five comments were received on this issue in the 1998 proposal. One commenter thought the proposal was fair. However, another stated that the method results in some proceeds from auctions from 1993 through 1998 being retained by the Agency, contrary to law. Two options were posed in comments regarding how remaining proceeds should be dealt with. One option would be for the Agency to redistribute those proceeds on a pro rata basis, although the method for such redistribution need not be as rigorous as a full redistribution. The other option would allow the Agency to dedicate the funds for educational and research activities related to emissions trading. While this second option is innovative, the Agency has decided not to dedicate the funds to education and research because of the lack of express Agency authority to use auction proceeds in this way.

EPA continues to believe, for the reasons stated in the 1996 proposal, that the allowance surrender and return of proceeds are necessary. However, EPA concludes that a simple pro rata redistribution of the proceeds from the allowances meets the requirements of the Act and is not overly burdensome. To fairly redistribute all remaining proceeds, EPA will use values in Column D of new, final Table 2 (1993–98 Purchase Year Reserve Deduction), which were included in the 1998 proposal, to determine each unit's pro rata share of the remaining funds. This methodology is set forth in revised § 73.27(b)(4). Each unit's designated representative will receive one check for all five years of additional auction proceeds.

Also, as explained in the proposal, existing paragraphs (b)(4) and (c)(4) of § 73.27 are unnecessary because allowances from calendar years 2010 and thereafter are not auctioned before 2003. No comments were received concerning the elimination of the paragraphs, which is implemented in today's action.

Finally, today's final rule requires in § 73.10(b)(3) the surrender of allowances and return of proceeds. In order to make clear which specific units are subject to this requirement, the paragraph includes a new table of the units, the number of allowances to be surrendered, and the value of proceeds to be returned. This table replaces the general provisions in the 1996 proposal (§ 73.10(b)(5) and (c)(3)) which required allowance surrender and return of proceeds without naming the units.

Today's final rule also requires completion of the allowance surrender and return of proceeds no later than 60 days after the effective date of this final rule.

D. Revision of the Repowering Reserve

Finalization of the allowance allocations is also dependent upon a reasonably accurate calculation of the number of allowances allocated for units with Phase II repowering extensions under section 409 of the Act. *See* 42 U.S.C. 7651 and 40 CFR 72.44. For the 1993 rule, EPA estimated that a set-aside of up to 500,000 allowances could be needed for repowering extensions. EPA based this number on an estimate of 10 GW of capacity being repowered. To create the set-aside, EPA withheld 50,000 allowances for each year from 2000 through 2009 from Phase II units' basic allowance allocations. 58 FR 15642. In the 1998 proposal, the Agency maintained a set aside of 500,000 allowances for repowering but stated that it would reduce the set-aside in the final rule to the amount necessary to implement all activated approved repowering plans. Today's action, therefore, reduces the reserve to 27,124 allowances.

One commenter pointed out that the 1998 proposal modified the method of calculating repowering allowances in § 73.21. EPA has reviewed the provision and agrees that the Agency inadvertently changed the method of calculating allowances, as opposed to merely correcting a reference. The 1993 rule (at § 73.21) provided that a unit's repowering allowances equal the number of allowances calculated under section 409(c) less the unit's adjusted basic allowances calculated under § 73.11. The commenter correctly noted that the 1998 proposal, which modified § 73.21 to remove reference § 73.11 and to refer instead to proposed Table 2 Column C, had the effect of increasing the repowering reserve. Proposed Table 2 Column C actually reflects a different and generally lower value than adjusted basic allowances; using the lower value in Table 2 Column C increases the calculated repowering allowances and, thus, increases the repowering reserve. However, the commenter recommended that a unit's repowering allowances equal the number of allowances under

[3] A total of 17 units are in this category, as explained in the 1996 proposal. Nine units have changes due to resolution of litigation. Three units have changes due to data errors by the Agency. Four units were found to be eligible for allocations. One unit, Twin Oak 2, as discussed below, is eligible only for allocations under section 405(g)(2).

section 409(c) less the unit's unadjusted basic allowances. While this would result in a smaller repowering reserve, it is not consistent with the 1993 rule.

As stated in the 1998 proposal, EPA is using the method of calculation from the 1993 rule. To implement that method in today's final rule, EPA is including, in place of the reference to § 73.11, a table listing the units with activated repowering plans and the estimated maximum number of adjusted basic allowances for which they qualify. *See* Technical Documentation, Appendix A.

Of the 16 petitions for repowering that were filed prior to the 1998 proposal, only two plans have been activated, representing 11 units. Using the calculation method from the 1993 rule, the maximum number of allowances needed for the repowering reserve is 27,124 allowances. *See* Docket Item A–97–24 IV–B–01 (explaining calculation of maximum number of repowering allowances). While EPA is estimating the units' maximum repowering allowances in order to estimate more accurately the number of allowances to reserve for repowering, these estimates are not final determinations of the allowances to be allocated to specific units. The final determinations will be made in case-by-case proceedings on each repowering extension plan, and the actual allocations may differ from the estimates. The allowances for this reserve are provided by deducting one-tenth of the reserve from unit allowance allocations for each year from 2000 through 2009. Because this reserve is much smaller than that proposed, most units are allocated more allowances in today's final Table 2, for years 2000 through 2009 than in the 1998 proposal. Note that, because repowering allowances have not been allocated, the reserve is set at the maximum that may be needed to implement the two activated plans. If fewer repowering allowances are allocated than provided in the reserve, EPA will use the allowance forfeiture and reallocation provisions at § 73.21(c) to reallocate any remaining allowances.

Because the reserve is not evenly divisible over the ten years, EPA has had to consider the best method of setting aside allowances for the reserve. If EPA were to set aside a smaller number of allowances than will be needed for the reserve (2712 each year for ten years) and create four additional allowances to complete the reserve, those four allowances would be in excess of the 8.9 million cap. As an alternative, EPA could set aside more allowances annually (2713) and provide a method whereby the excess six allowances (27130 minus 27124) would be equitably distributed. EPA believes the second approach better reflects the intent of title IV. As mentioned above, any allowances remaining in the repowering reserve will be distributed by the allowance forfeiture formula in the repowering regulations.

However, as with setting the reserve, using the existing allowance forfeiture equation at § 73.21(c)(2), if the number of allowances to be forfeited is not evenly divisible by ten, will result in allowances remaining after forfeiture. EPA has reviewed the existing rule and has determined that it is not necessary to spread forfeited allowances across ten years. To create the repowering reserve, allowances were taken from ten years' allowance accounts. However, all allowances in the reserve were renumbered to have a use date of 2000. Therefore, EPA does not consider it necessary to renumber again any forfeited allowances for use years other than 2000. This change also makes it unnecessary to address situations where the number of forfeited allowances is not divisible by ten.

In addition, EPA has determined that it is necessary to clarify that the allowances to be reallocated are only those allowances from the repowering reserve. Under section 405(a)(2) only repowering allowances for 2000 are set aside (i.e., are put in the reserve) from unit accounts. Allowances for 2001 through 2003 are above the allowance cap. Therefore, only allowances forfeited in 2000 will need to be reallocated to unit accounts.

The repowering allowance forfeiture and reallocation provisions at § 73.21(c) are revised to reflect these changes.

E. Treatment of Allocations to Certain Units Under Table B

As explained in the 1998 proposal, most units receive Phase II allowance allocations based on various formulae specified in the Act. However, eleven units are specified in Table B of section 405(g)(2) to receive a fixed number of basic allowances. As provided in the 1993 rule, the owner or operator of any of these units would receive the Table B allowances unless it elected to receive allowances under another section of the Act for which the unit is eligible. 57 FR 29955. Only three units (Clover 1 and 2 and Twin Oak 1) elected to receive allowances under another section (in all three cases, section 405(g)(4)) if they were eligible. Clover 1 and 2 demonstrated eligibility for allowances under section 405(g)(4) and are provided their allowance allocations in Table 2. The 1996 proposal stated that Twin Oak 1 did not commence operation in time to be eligible for section 405(g)(4) and, so, would receive allowances under section 405(g)(2). As provided in the 1993 rule, all other units listed in Table B of section 405(g)(2) would receive allowances listed in Table B as unadjusted basic allowances. No comments were received concerning section 405(g)(2), and for the reasons stated in the proposal, these units are allocated allowances as proposed, except for adjustments to reflect the reduced repowering reserve, discussed in section III.D. of this preamble.

F. Revised Tables

The 1993 final allocation of allowances included three allowance tables—Table 2 listing most affected units, Table 3 listing units expected to be eligible under section 405(g)(4), and Table 4 listing units expected to be eligible under section 405(i)(2). Tables 3 and 4 in the 1993 rule were provided to assist unit owners in identifying the appropriate units for which additional information was required under the rule.

As noted above, for the 1998 reallocation of allowances, EPA proposed in the 1998 proposal to consolidate the tables and to include in Table 2 only the information necessary for the operation of the program. To provide for distribution of proceeds from the allowance auction and sale, EPA proposed that the table include the special allowance reserve values for 2000 and 2010. Also, the Agency proposed that the table list the repowering reserve values in case any repowering allowances are subsequently forfeited due to failure of the repowering project under § 72.44(g) or due to overstatement of the repowering reserve. Final allocations for 2000 and 2010 were listed. Additional information is provided in the Technical Documentation. Also, as noted above, the proposed table provided a column listing the reserve deductions for the auctions that took place from 1993 through 1998.

Two comments were received, both supporting consolidation and streamlining of the tables. EPA has adopted that approach here. One commenter also noted that two footnotes in the proposed tables contained technical errors. The commenter is correct, and the footnotes have been corrected for the final rule. In addition, consistent with the approach in the proposal, a reference to Table 3 in § 73.21(c) has been eliminated.

G. Miscellaneous

EPA proposed a number of modifications and corrections to the allowance rules to eliminate sections that are no longer necessary and to correct references. The proposed modifications and corrections were described in the ''Miscellaneous'' section of the preamble to the 1998 proposal. No comments were received on these issues, and the Agency has adopted the proposed changes in this final rule.

Aside from the foregoing corrections, one commenter noted that several proposed provisions continued to refer to the direct sales program, which was eliminated by the Agency in 1996 (*see* 61 FR 28761, June 6, 1996). The Agency has reviewed the 1998 proposal and 40 CFR part 73 and found references to the direct sales program in §§ 73.27(a)(2), 73.27(b) (2), (3) and (5), 73.27(c) (2), (3) and (5), and § 73.70(b). In today's final rule, EPA is eliminating these last references to the direct sales program, as requested by the commenter. Also, § 73.27(a)(2), establishing the auction reserve, is corrected to reflect that the 50,000 allowances formerly in the Direct Sale Subaccount are now incorporated into the Auction Subaccount, making the annual Auction Subaccount total 250,000 allowances.

IV. National Allowance DataBase

Some changes have been made to the National Allowance Data Base (NADB) since issuance of the March 23, 1993 notice of availability of the NADB (58 FR 15720, March 23, 1993). The database used to calculate allowances herein is NADB version 2.2 and is available from the sources listed in the **FOR FURTHER INFORMATION CONTACT** section above.

As stated in the 1998 proposal, NADB version 2.2 includes new data and data corrections discussed in the 1996 proposal. These data and corrections are adopted for the reasons stated in the 1996 proposal. Consistent with the 1993 rule and the 1996 proposal, EPA has not made any other corrections based on alleged errors or any new requests for data changes, except for changes in nonsubstantive identifying information (e.g., boiler identifiers).

Only one comment was received on the 1998 proposal concerning the NADB. The commenter requested EPA to add information on two units (George F. Wheaton Units 1 and 2, which serve generators that provide electricity to the owner's manufacturing plant and are required to make available electricity for sale to certain utilities) to the NADB for purposes of allocating allowances to the units. The commenter suggested that the two units are affected utility units under the Acid Rain Program. According to the commenter, EPA has recognized that ''industrial units,'' such as the commenter's units, should have received allowance allocations. The only ''industrial units'' specifically identified by the commenter as warranting allowance allocations were its own units.

EPA previously rejected, in a final rulemaking notice issued October 24, 1997, a request by the commenter that allowances be allocated to ''industrial units.'' In today's rulemaking, EPA is not reconsidering its rejection of that claim, which the commenter repeated here. Moreover, EPA here rejects, for two reasons, the new claim that information on the commenter's units be added to the NADB for allowance allocation. First, EPA previously decided that no allowances should be allocated to the units because the commenter failed to submit a timely claim (with supporting information) for allowances. A new, late submission obviously cannot cure this deficiency. Second, the information in the commenters' late submission is deficient on its face.

In the prior rulemaking, this commenter made the same claim that ''industrial units'' that do not qualify for an exemption from the Acid Rain Program should be allocated allowances.[4] *Compare* 62 FR 55466 and Docket Item A–97–24 II–D–08, Comments of Zinc Corporation of America at 6–7 (March 9, 1998). In the October 24, 1997 notice, EPA rejected that claim. *Id.* As stated in the October 24, 1997 notice, the commenter's claim that allowances should be allocated to ''industrial units'' ''ignores the fact that EPA has previously specified deadlines by which parties claiming an erroneous failure to allocate allowances to a unit were required to submit such claims and necessary supporting information to EPA.'' 62 FR 55466.

Since the commenter has now, for the first time, submitted information on its units for the NADB, EPA is summarizing here the notices that established the deadlines and data requirements for NADB submissions. In a July 1991 notice, EPA stated that it would allocate allowances based on information in the NADB, a version (NADB version 2.0) of which was made available for public review. EPA also explained what information on a unit and supporting data and documentation had to be submitted to EPA in order to add information to the NADB for purposes of allocating allowances to the unit. 56 FR 33278, 33283 (1991). A major requirement was that any additional information had to be ''well-documented.'' *Id.* For example, the owner or operator of a unit had to submit information on the unit's 1985 SO_2 emissions and, if that value was based on emissions monitoring, the underlying monitoring data or independent emissions inventory. If that value was calculated based on the fuels burned in 1985, the ''equation used, percent sulfur in fuel, ash retention of fuel, and any other data used'' had to be provided. 56 FR 33284. Similarly, the other data elements needed for allocating allowances (i.e., 1985 SO_2 emission limit, generator summer net dependable capacity, 1985–87 average annual total heat input) had to be submitted with supporting documentation. *Id.* (listed as data elements 16, 20, and 23).[5] Further, EPA noted that ''[u]nits eligible for allowances will not be allocated allowances if the final database does not include the information necessary to calculate such allowances.'' 56 FR 33283.

In a July 1992 notice, EPA provided for public review of NADB version 2.1, as well as a list (referred to as the ''Adjunct Data File'') of units of ''nontraditional utilities'' that were not in NADB version 2.1 and that included the commenter's units (albeit listed under the commenter's predecessor-company, St. Joseph Minerals Corporation). EPA indicated that the units in the Adjunct Data File might or might not be affected units and that, in any event, it lacked sufficient information on which to base any allowance allocations for the listed

[4] In fact, in its March 9, 1998 comments in the instant proceeding, the commenter incorporated by reference its February 10, 1997 comments submitted in the prior rulemaking where EPA established an exemption from most Acid Rain Program requirements for industrial-utility units. The February 10, 1997 comments are fully addressed in the preamble of the final rule in the prior proceeding. See 62 FR 55460, 55463–66 (1997). To the extent that portions of either set of comments address issues concerning the industrial-utility units exemption or the applicability of the Acid Rain Program to ''industrial units'' or the commenter's units, those portions (e.g., the entire section I of the February 10, 1997 comments) are outside the scope of, and so are not addressed, in this rulemaking.

[5] If the commenter's units had qualified for allowances, EPA would have calculated the annual number of basic allowances (for 2000 and thereafter) for each unit, under section 405(d)(2) of the Act, as the unit's 1985–1987 average total heat input times the lesser of the unit's 1985 SO_2 emission rate or 1985 SO_2 emission limit. Annual bonus allowances (for 2000 through 2009) would have been calculated, under section 405(d)(3)(B) of the Act, for each unit using generator summer net dependable capacity and the lesser of the unit's 1985 SO_2 emission rate or 1985 SO_2 emission limit.

units. *Id.* Further, EPA gave notice that if ''the data elements required for determining allowance allocations'' were not provided within the comment period (i.e., by September 8, 1992) for ''a unit that may be affected now or in the future'', the unit would not be allocated allowances. *Id.*

Finally, in a March 1993 notice, EPA stated that those units in the Adjunct Data File that were affected units and for which the necessary data had been submitted were being included in the NADB (version 2.11) and would be allocated the appropriate number of allowances. 58 FR 15720, 15727 (1993). Believing that it had corrected all timely identified errors in the NADB and resulting allocations, EPA issued a second March 1993 notice stating that any unit not allocated allowances in the notice ''but meeting the applicability requirements [for the Acid Rain Program] * * * will not receive allowance allocations [under the allowance allocation regulations for the Acid Rain Program] * * *'' 58 FR 15634, 15641 (1993). Consequently, EPA stated in the 1998 proposal that, except for the issues discussed in the 1996 proposal, EPA would not consider any issues that were addressed in 1992 and 1993 concerning the NADB or ''any issues that could have been raised in connection with NADB versions 2.0 and 2.1.'' 63 FR 718.

As stated in the October 24, 1997 notice, neither the commenter (Zinc Corporation of America) nor its predecessor-company submitted any information or supporting data and documentation concerning the units by the September 8, 1992 submission deadline. 62 FR 55466. On March 9, 1998, on the instant proceeding, the commenter submitted, for the first time, information on, *inter alia,* the unit's 1985 SO_2 emissions, 1985 SO_2 emission limit, generator summer net dependable capacity, and 1985–87 average annual total heat input. The fact that the submission is over five years late is alone sufficient basis for rejecting the submission. *See* 62 FR 55466 (explaining basis for September 8, 1992 submission deadline) In addition, the submission is substantively deficient on its face because the submission included only values for these elements and none of the supporting data or documentation required by the July 1991 and July 1992 notices. For example, the commenter listed the 1985 SO_2 emissions but provided neither monitoring data nor a formula and data for calculating emissions.[6] Similarly, the SO_2 emission limit, generator capacity, and heat input were not documented, whether through a State Implementation Plan or permit, State regulatory records, or other records. *Compare* Comments of Zinc Corporation of America, Exhibit A (March 9, 1998) and 56 FR 33284.

EPA notes that, while the commenter suggests in its comments that the Acid Rain Program is applicable to its units, EPA has not made a determination of whether the units are affected units or whether the exemption for industrial-utility units (under § 72.14) applies to the units. As stated in the October 24, 1997 notice, assuming *arguendo* that the units are affected units without any applicable exemption, the units will be treated like any unit that has not been allocated allowances and is or becomes an affected unit, i.e., no allowances will be allocated, and the units must obtain allowances through the allowance market. 62 FR 55466.

EPA's approach of imposing deadlines and substantive requirements for the submission of information and data for allowance allocation and rejecting submissions when the deadline or the substantive requirements are not met has been upheld by the courts. *See Texas Municipal Power Agency* v. *EPA,* 89 F3d. 858, 870 (D.C. Cir. 1996) (upholding EPA's discretion to specify the information that must be submitted, and the submission deadline, for allowance allocations and to determine how to handle a submission that did not meet these requirements). In the instant proceeding, the commenter's only submission, which was made over five years after the deadline, lacked any of the required supporting data and documentation.[7] Under these circumstances, EPA's rejection of the submission is reasonable.[8] *See id.* at 873 (upholding EPA's refusal to allocate allowances where the owners of units failed to submit necessary information ''until well after the deadlines'' set by EPA even though the information was available).

V. Administrative Requirements

A. Executive Order 12866

Under Executive Order 12866, 58 FR 51735 (October 4, 1993), the Administrator must determine whether the regulatory action is ''significant'' and therefore subject to Office of Management and Budget (OMB) review and the requirements of the Executive Order. The Order defines ''significant regulatory action'' as one that is likely to result in a rule that may:

(1) Have an annual effect on the economy of $100 million or more or adversely affect in a material way the economy, a sector of the economy, productivity, competition, jobs, the environment, public health or safety, or State, local, or tribal governments or communities;

(2) Create a serious inconsistency or otherwise interfere with an action taken or planned by another agency;

(3) Materially alter the budgetary impact of entitlements, grants, user fees, or loan programs or the rights and obligations of recipients thereof; or

(4) Raise novel legal or policy issues arising out of legal mandates, the President's priorities, or the principles set forth in the Executive Order.

Pursuant to the terms of Executive Order 12866, OMB has determined that this rule is not a ''significant regulatory action.''

B. Unfunded Mandates Act, Executive Order 12875 and 13084

Section 202 of the Unfunded Mandates Reform Act of 1995 (''UMRA'') requires that the Agency prepare a budgetary impact statement before promulgating a rule that includes a federal mandate that may result in expenditure by State, local, and tribal governments, in aggregate, or by the private sector, of $100 million or more in any one year. Section 203 requires the Agency to establish a plan for obtaining input from and informing, educating, and advising any small governments that may be significantly or uniquely affected by the rule.

Under section 205 of the UMRA, the Agency must identify and consider a reasonable number of regulatory alternatives before promulgating a rule for which a budgetary impact statement must be prepared. The Agency must select from those alternatives the least costly, most cost-effective, or least burdensome alternative that achieves the objectives of the rule, unless the Agency explains why this alternative is not selected or the selection of this alternative is inconsistent with law.

[6] The commenter does not state clearly whether the emissions data provided in its comments were from continuous emissions monitors or were calculated. In either case, supporting documentation was required.

[7] In contrast, in *Texas Municipal,* one petitioner provided information, but no supporting data, by the submission deadline, and EPA therefore used some of the information plus other, verifiable information to calculate allowances for the petitioner's units. 89 F3d. 869.

[8] The commenter has never indicated that the information concerning its 1985 emissions, 1985 emission limit, capacity, or 1985–87 heat input were not available in 1992. In light of the historical nature of the emission and heat input information and since capacity of a unit does not generally change, EPA maintains that all this information probably was available and could have been submitted prior to the deadline.

Under Executive Order 12875, EPA may not issue a regulation that is not required by statute and creates a mandate on State, local, or tribal governments unless the Federal government providees the funds necessary to cover such mandates or consults with representatives of affected State, local or tribal governments before promulgation. Executive Order 13084 establishes similar requirements regarding regulations the significantly or uniquely affect Indian tribal governments.

Because this rule is estimated to result in the expenditure by State, local, and tribal governments or the private sector of less than $100 million in any one year, the Agency has not prepared a budgetary impact statement under UMRA. Today's rule does not create a mandate for State, local or tribal governments and does not significantly or uniquely affect communities of tribal governments. The rule does not impose any enforceable duties on these entities. Accordingly, the requirements of section 1(a) of Executive Order 12875 and section 3(b) of Executive Order 13084 do not apply to this rule.

The revisions to part 73 will not have a significant effect on regulated entities or State permitting authorities. Since sections 403(a) and 405(a)(3) of the Act set a nationwide cap on annual allowance allocations, any reduction of allowances would result in a small increase to the annual allocations for other units that receive allocations. As discussed in the preamble for the 1996 proposal, the revisions explained in the 1996 proposal and incorporated in today's final rule, do not have a significant adverse impact. 61 FR 68366. The other revisions in today's rule (i.e., the revised qualification requirements for allocations under section 405(i)(2), the redistribution of auction proceeds, and reduced repowering reserve) will also not have a significant impact and, in general, result in increased allocations and proceeds receipts for most units.

C. Paperwork Reduction Act

This action revising the allowance allocations rule will not impose any new information collection burden. OMB has previously approved the information collection requirements contained in the allowance rules, 40 CFR part 73, under the provisions of the Paperwork Reduction Act, 44 U.S.C. 3501, *et seq. See* EPA ICR Number 1633.10; OMB Control Number 2060.0258.

Burden means the total time, effort, or financial resources expended by persons to generate, maintain, retain, or disclose or provide information to or for a Federal agency. This includes the time needed to review instructions; develop, acquire, install, and utilize technology and systems for the purposes of collecting, validating, and verifying information, processing and maintaining information, and disclosing and providing information; adjust the existing ways to comply with any previously applicable instructions and requirements; train personnel to be able to respond to a collection of information; search data sources; complete and review the collection of information; and transmit or otherwise disclose the information.

Copies of the previously approved ICR may be obtained from Director, Regulatory Information Division; EPA; 401 M. Street S.W. (mail code 2137); Washington, D.C. 20460 or by calling (202) 260–2740. Include the ICR and/or OMB number in any correspondence.

D. Regulatory Flexibility

The Regulatory Flexibility Act (RFA) generally requires an agency to conduct a regulatory flexibility analysis of any rule subject to notice and comment rulemaking requirements unless the agency certifies that the rule will not have a significant economic impact on a substantial number of small entities. Small entities include small businesses, small not-for-profit enterprises, and small governmental jurisdictions.

In the preamble of the January 11, 1993 core rules for the Acid Rain Program, the Administrator certified that the rules would not have a significant, adverse impact on small entities. 58 FR 3590, 3649. Today's revisions do not add any requirements that would burden small entities. Moreover, as explained above in this preamble and the 1996 proposal (61 FR 68367), the effect of the 1998 allowance adjustments on owners and operators of the units is not significant. Most units gain allowances. The only units losing allowances are: those deemed unaffected units and, therefore, not subject to the requirements of the Acid Rain Program; those that have requested to receive fewer basic allowances in order to receive bonus allowances; and those that have been determined to be ineligible for certain allocations, based on information supplied by the utilities. Thus, the 1998 allowance revisions take allowances only from units when the units are not eligible to receive them or when the unit's owner or operator prefers an alternative allocation. For these reasons, EPA has determined that this rule will not have a significant, economic impact on a substantial number of small entities.

E. Children's Health Protection

This final rule is not subject to E.O. 13045, entitled Protection of Children from Environmental Health Risks and Safety Risks (62 FR 19885, April 23, 1997), because it does not involve decisions on environmental health risks or safety risks that may disproportionately affect children.

F. National Technology Transfer and Advancement Act

Section 12(d) of the National Technology Transfer and Advancement Act of 1995 (''NTTAA''), Pub. L. No. 104–113, 15 U.S.C. 272 note, directs EPA to use voluntary consensus standards in its regulatory activities unless to do so would be inconsistent with applicable law or otherwise impractical. Voluntary consensus standards are technical standards (e.g., materials specification, test methods, sampling procedures, business practices, etc.) that are developed or adopted by voluntary consensus standards bodies. The NTTAA requires EPA to provide Congress, through OMB, explanations when the Agency decides not to use available and applicable voluntary consensus standards.

This final rule does not involve any technical standards that would require Agency consideration of voluntary consensus standards pursuant to section 12(d) of the NTTAA.

G. Submission to Congress and to the General Accounting Office

The Congressional Review Act, 5 U.S.C. 801, *et seq.*, as added by the Small Business Regulatory Enforcement Fairness Act of 1996, generally provides that before a rule may take effect, the agency promulgating the rule must submit a rule report, which includes a copy of the rule, to each House of the Congress to the Comptroller General of the United States. EPA will submit a report containing this action and any other required information to the U.S. Senate, the U.S. House of Representatives, and the Comptroller General of the General Accounting Office prior to publication of this document in the **Federal Register**. This action is not a ''major rule'' as defined in 5 U.S.C. 804(2).

List of Subjects in 40 CFR Part 73

Environmental protection, Acid rain, Air pollution control, Electric utilities, Reporting and recordkeeping requirements, Sulfur dioxide.

Dated: September 15, 1998.

Carol M. Browner,

Administrator.

For the reasons set forth in the preamble, 40 CFR part 73 is amended as set forth below.

PART 73—[AMENDED]

1. The authority citation for part 73 continues to read as follows:

Authority: 42 U.S.C. 7601 and 7651, *et seq.*

2. Section 73.10 is amended by:

a. In paragraph (b)(1) revising the words ''Table 2 Column E'' to read ''Table 2 Column C''; and removing the words '', except that units listed in both Table 2 and Table 4 will be allocated allowances as specified in Table 4 Column C, multiplied by .9011, reduced by 1.3185 times Table 2 Column B, and increased by Table 2 Columns C and D'';

b. In paragraph (b)(2) revising the words ''Table 2 Column I'' to read ''Table 2 Column F''; and removing the words '', except that units listed in both Table 2 and Table 4 will be allocated allowances as specified in Table 4 Column F, multiplied by .8987, reduced by Table 2 Column G, and increased by Table 2 Column H'';

c. Removing paragraphs (c) and (d) (including Tables 3 and 4); and

d. Revising Table 2 of paragraph (b) and paragraph (b)(3) to read as follows:

§ 73.10 Initial allocations for phase I and phase II.

* * * * *

(b) * * *

* * * * *

BILLING CODE 6560–50–U

Table 2 - Phase II Allowance Allocations

State	Plant Name	Boiler1	Allowances for Years 2000-2009				Years 2010 and Beyond	
			(A) Auction Reserve Deduction	(B) Repower-ing Deduction	(C)2 Total Annual Phase II	(D) 1993-1998 Auction Deduction	(E) Auction Reserve Deduction	(F)3 Total Annual Phase II
AL	Barry	1	113	1	3881	112	112	3890
AL	Barry	2	124	1	4291	124	124	4299
AL	Barry	3	256	3	8808	255	255	8827
AL	Barry	4	292	3	10048	291	291	10069
AL	Barry	5	721	9	24827	718	720	24878
AL	Charles R Lowman	1	34	0	1853	34	34	1184
AL	Charles R Lowman	2	204	2	7024	203	203	7038
AL	Charles R Lowman	3	171	2	5893	171	171	5906
AL	Chickasaw	110	3	0	111	3	3	111
AL	Colbert	1	165	2	5852	165	165	5863
AL	Colbert	2	186	2	6600	186	186	6613
AL	Colbert	3	188	2	6639	187	187	6653
AL	Colbert	4	188	2	6644	187	187	6659
AL	Colbert	5	453	5	16028	452	452	16060
AL	E C Gaston	1	220	2	7803	220	220	7818
AL	E C Gaston	2	226	2	7994	225	226	8009
AL	E C Gaston	3	223	2	7894	222	223	7910
AL	E C Gaston	4	235	3	8310	234	234	8328
AL	E C Gaston	5	730	9	25796	728	729	25848
AL	Gadsden	1	57	1	1956	57	57	1961
AL	Gadsden	2	59	1	2023	59	59	2027
AL	Gorgas	10	651	8	22435	649	650	22483
AL	Gorgas	5	36	0	1756	36	36	1251
AL	Gorgas	6	65	1	3035	64	65	2232
AL	Gorgas	7	72	1	3138	72	72	2500
AL	Gorgas	8	136	1	4758	136	136	4707
AL	Gorgas	9	135	1	4746	134	134	4653
AL	Greene County	1	246	3	8485	246	246	8502
AL	Greene County	2	230	2	7921	229	229	7938
AL	James H Miller Jr	1	351	4	14213	350	350	12122
AL	James H Miller Jr	2	515	7	17762	514	514	17800
AL	James H Miller Jr	3	505	5	17417	504	504	17453
AL	James H Miller Jr	4	233	3	8046	233	233	8063
AL	McIntosh-CAES	**1	27	0	938	27	27	939
AL	McWilliams	**4	0	0	0	0	0	0
AL	Widows Creek	1	70	1	3339	70	70	2417
AL	Widows Creek	2	61	1	3211	61	61	2118
AL	Widows Creek	3	71	1	3355	71	71	2457
AL	Widows Creek	4	78	1	3453	78	78	2686
AL	Widows Creek	5	85	1	3564	85	85	2946
AL	Widows Creek	6	66	1	3278	66	66	2280
AL	Widows Creek	7	161	2	7803	161	161	5573
AL	Widows Creek	8	153	2	7458	153	153	5290
AZ	Agua Fria	1	0	0	54	0	1	34
AZ	Agua Fria	2	0	0	65	0	1	39

Table 2 - Phase II Allowance Allocations

State	Plant Name	Boiler1	Allowances for Years 2000-2009				Years 2010 and Beyond	
			(A) Auction Reserve Deduction	(B) Repower-ing Deduction	(C)2 Total Annual Phase II	(D) 1993-1998 Auction Deduction	(E) Auction Reserve Deduction	(F)3 Total Annual Phase II
AZ	Agua Fria	3	0	0	77	0	2	67
AZ	Apache Station	1	10	0	331	10	10	332
AZ	Apache Station	2	41	0	1609	41	41	1420
AZ	Apache Station	3	82	1	3010	82	82	2836
AZ	Cholla	**5	0	0	0	0	0	0
AZ	Cholla	1	59	1	2222	59	59	2034
AZ	Cholla	2	147	2	5441	146	146	5067
AZ	Cholla	3	141	2	5145	140	140	4858
AZ	Cholla	4	225	2	8332	225	225	7784
AZ	Coronado	U1B	151	2	5731	150	150	5199
AZ	Coronado	U2B	158	2	5901	158	158	5465
AZ	De Moss Petrie	4	0	0	0	0	0	0
AZ	Gila Bend	**GT1	0	0	0	0	0	0
AZ	Gila Bend	**GT2	0	0	0	0	0	0
AZ	Gila Bend	**GT3	0	0	0	0	0	0
AZ	Gila Bend	**GT4	0	0	0	0	0	0
AZ	Irvington	1	0	0	16	0	0	14
AZ	Irvington	2	0	0	28	0	1	40
AZ	Irvington	3	0	0	0	0	0	2
AZ	Irvington	4	81	1	2853	81	81	2805
AZ	Kyrene	K-1	0	0	7	0	0	7
AZ	Kyrene	K-2	0	0	18	0	0	16
AZ	Navajo	1	723	9	26211	721	722	24949
AZ	Navajo	2	676	8	24254	674	676	23354
AZ	Navajo	3	686	8	25034	684	686	23693
AZ	Ocotillo	1	0	0	56	0	1	40
AZ	Ocotillo	2	3	0	132	3	4	129
AZ	Saguaro	1	5	0	204	5	5	189
AZ	Saguaro	2	0	0	25	0	1	22
AZ	Springerville	1	177	2	6564	176	176	6099
AZ	Springerville	2	167	2	5754	166	167	5765
AZ	Springerville	3	0	0	0	0	0	0
AZ	West Phoenix	4	0	0	11	0	0	9
AZ	West Phoenix	6	0	0	22	0	0	15
AZ	Yuma Axis	1	0	0	42	0	1	40
AR	Carl Bailey	01	0	0	10	0	0	8
AR	Cecil Lynch	1	0	0	0	0	0	0
AR	Cecil Lynch	2	0	0	0	0	0	0
AR	Cecil Lynch	3	0	0	3	0	0	0
AR	Flint Creek	1	421	5	15187	420	421	14556
AR	Hamilton Moses	1	0	0	0	0	0	0
AR	Hamilton Moses	2	0	0	0	0	0	0
AR	Harvey Couch	1	0	0	7	0	0	3
AR	Harvey Couch	2	0	0	112	0	3	113
AR	Independence	1	496	5	18150	494	495	17123

Table 2 - Phase II Allowance Allocations

State	Plant Name	Boiler1	Allowances for Years 2000-2009				Years 2010 and Beyond	
			(A) Auction Reserve Deduction	(B) Repower-ing Deduction	(C)2 Total Annual Phase II	(D) 1993-1998 Auction Deduction	(E) Auction Reserve Deduction	(F)3 Total Annual Phase II
AR	Independence	2	496	5	18396	495	495	17142
AR	Lake Catherine	1	0	0	0	0	0	0
AR	Lake Catherine	2	0	0	0	0	0	0
AR	Lake Catherine	3	0	0	8	0	0	6
AR	Lake Catherine	4	3	0	156	3	10	337
AR	McClellan	01	0	0	15	0	0	13
AR	Robert E Ritchie	1	0	0	53	0	2	67
AR	Robert E Ritchie	2	62	1	2147	62	62	2138
AR	Thomas Fitzhugh	1	0	0	1	0	0	1
AR	White Bluff	1	582	7	20933	581	581	20116
AR	White Bluff	2	668	8	23892	666	667	23059
CA	Alamitos	1	78	1	2774	78	78	2703
CA	Alamitos	2	0	0	105	0	0	17
CA	Alamitos	3	0	0	290	0	2	81
CA	Alamitos	4	16	0	819	16	16	541
CA	Alamitos	5	112	1	4226	112	112	3866
CA	Alamitos	6	27	0	1484	27	27	936
CA	Avon	1	0	0	17	0	0	14
CA	Avon	2	0	0	0	0	0	14
CA	Avon	3	0	0	0	0	0	14
CA	Broadway	B1	4	0	127	4	4	124
CA	Broadway	B2	4	0	164	4	4	155
CA	Broadway	B3	0	0	74	0	2	71
CA	Contra Costa	1	0	0	125	1	0	16
CA	Contra Costa	10	115	1	4285	115	115	3978
CA	Contra Costa	2	0	0	2	0	0	23
CA	Contra Costa	3	0	0	0	0	0	20
CA	Contra Costa	4	0	0	0	0	0	15
CA	Contra Costa	5	0	0	0	0	0	16
CA	Contra Costa	6	0	0	0	0	0	13
CA	Contra Costa	7	0	0	28	0	1	28
CA	Contra Costa	8	0	0	53	0	1	40
CA	Contra Costa	9	1	0	356	0	9	303
CA	Cool Water	1	0	0	10	0	0	11
CA	Cool Water	2	0	0	6	0	0	8
CA	El Centro	3	17	0	614	17	17	579
CA	El Centro	4	16	0	586	16	16	560
CA	El Segundo	1	10	0	440	10	10	357
CA	El Segundo	2	0	0	90	0	2	62
CA	El Segundo	3	1	0	182	1	5	171
CA	El Segundo	4	2	0	370	2	10	363
CA	Encina	1	13	0	491	13	13	446
CA	Encina	2	30	0	1131	30	30	1042
CA	Encina	3	20	0	737	20	20	680
CA	Encina	4	53	1	1945	52	52	1816

Table 2 - Phase II Allowance Allocations

State	Plant Name	Boiler1	Allowances for Years 2000-2009				Years 2010 and Beyond	
			(A) Auction Reserve Deduction	(B) Repower-ing Deduction	(C)2 Total Annual Phase II	(D) 1993-1998 Auction Deduction	(E) Auction Reserve Deduction	(F)3 Total Annual Phase II
CA	Encina	5	69	1	2494	69	69	2399
CA	Etiwanda	1	3	0	117	3	3	94
CA	Etiwanda	2	0	0	29	0	1	17
CA	Etiwanda	3	34	0	1372	34	34	1169
CA	Etiwanda	4	1	0	261	1	8	271
CA	Glenarm	16	0	0	0	1	0	0
CA	Glenarm	17	0	0	0	2	0	0
CA	Grayson	4	3	0	102	2	3	87
CA	Grayson	5	1	0	36	3	1	42
CA	Harbor Gen Station	**10A	20	0	699	20	20	700
CA	Harbor Gen Station	**10B	20	0	699	20	20	700
CA	Harbor Gen Station	1	2	0	68	0	2	61
CA	Harbor Gen Station	2	3	0	121	0	3	107
CA	Harbor Gen Station	3	3	0	94	0	2	86
CA	Harbor Gen Station	4	3	0	104	0	3	98
CA	Harbor Gen Station	5	4	0	171	0	4	154
CA	Haynes Gen Station	1	17	0	681	17	17	571
CA	Haynes Gen Station	2	9	0	338	9	9	328
CA	Haynes Gen Station	3	33	0	1244	33	33	1131
CA	Haynes Gen Station	4	25	0	1002	25	25	851
CA	Haynes Gen Station	5	35	0	1401	35	35	1205
CA	Haynes Gen Station	6	37	0	1527	37	37	1270
CA	Highgrove	1	0	0	4	0	0	3
CA	Highgrove	2	0	0	1	0	0	0
CA	Highgrove	3	0	0	1	0	0	1
CA	Highgrove	4	0	0	3	0	0	3
CA	Humboldt Bay	1	10	0	358	10	10	341
CA	Humboldt Bay	2	0	0	24	0	1	26
CA	Hunters Point	3	0	0	76	0	1	47
CA	Hunters Point	4	0	0	5	0	1	48
CA	Hunters Point	5	0	0	74	0	1	42
CA	Hunters Point	6	0	0	1	0	1	37
CA	Hunters Point	7	0	0	192	0	5	170
CA	Huntington Beach	1	33	0	1325	33	33	1153
CA	Huntington Beach	2	28	0	1134	28	28	970
CA	Huntington Beach	3	1	0	161	1	2	62
CA	Huntington Beach	4	1	0	176	1	2	76
CA	Kern	1	0	0	3	0	0	2
CA	Kern	2	0	0	0	0	0	3
CA	Kern	3	0	0	13	0	0	3
CA	Kern	4	0	0	0	0	0	3
CA	Magnolia	M4	1	0	37	1	1	33
CA	Mandalay	1	34	0	1379	33	33	1159
CA	Mandalay	2	32	0	1291	31	31	1090
CA	Martinez	1	0	0	1	0	0	1

Table 2 - Phase II Allowance Allocations

State	Plant Name	Boiler1	Allowances for Years 2000-2009				Years 2010 and Beyond	
			(A) Auction Reserve Deduction	(B) Repower-ing Deduction	(C)2 Total Annual Phase II	(D) 1993-1998 Auction Deduction	(E) Auction Reserve Deduction	(F)3 Total Annual Phase II
CA	Martinez	2	0	0	1	0	0	1
CA	Martinez	3	0	0	1	0	0	1
CA	Morro Bay	1	41	0	1561	41	41	1410
CA	Morro Bay	2	0	0	139	0	3	98
CA	Morro Bay	3	101	1	3821	101	101	3496
CA	Morro Bay	4	83	1	3052	83	83	2884
CA	Moss Landing	1	0	0	122	0	0	17
CA	Moss Landing	2	0	0	0	0	0	15
CA	Moss Landing	3	0	0	0	0	0	19
CA	Moss Landing	4	0	0	0	0	0	21
CA	Moss Landing	5	0	0	0	0	0	21
CA	Moss Landing	6	0	0	0	0	0	14
CA	Moss Landing	6-1	235	3	8921	235	235	8125
CA	Moss Landing	7	0	0	79	0	1	52
CA	Moss Landing	7-1	2	0	976	2	20	694
CA	Moss Landing	8	13	0	466	13	13	435
CA	Oleum	1	4	0	146	4	4	122
CA	Oleum	2	4	0	138	4	4	138
CA	Oleum	3	8	0	244	8	8	242
CA	Oleum	4	2	0	102	2	2	102
CA	Oleum	5	6	0	174	6	6	174
CA	Oleum	6	6	0	204	6	6	204
CA	Olive	01	3	0	133	3	3	121
CA	Olive	02	0	0	25	0	1	47
CA	Ormond Beach	1	110	1	4519	109	109	3785
CA	Ormond Beach	2	118	1	4585	118	118	4092
CA	Pittsburg	1	43	0	1641	43	43	1494
CA	Pittsburg	2	36	0	1350	35	36	1228
CA	Pittsburg	3	42	0	1586	42	42	1443
CA	Pittsburg	4	42	0	1581	42	42	1452
CA	Pittsburg	5	0	0	285	0	8	288
CA	Pittsburg	6	104	1	3753	103	103	3578
CA	Pittsburg	7	1	0	740	1	18	625
CA	Potrero	3-1	0	0	321	0	8	266
CA	Redondo Beach	11	0	0	36	0	0	4
CA	Redondo Beach	12	0	0	0	0	0	2
CA	Redondo Beach	13	0	0	0	1	0	4
CA	Redondo Beach	14	0	0	0	1	0	4
CA	Redondo Beach	15	0	0	0	0	0	3
CA	Redondo Beach	16	0	0	0	0	0	5
CA	Redondo Beach	17	0	0	0	0	0	6
CA	Redondo Beach	5	0	0	80	0	4	126
CA	Redondo Beach	6	0	0	105	0	3	103
CA	Redondo Beach	7	1	0	554	0	14	483
CA	Redondo Beach	8	1	0	597	0	14	496

Table 2 - Phase II Allowance Allocations

State	Plant Name	Boiler1	Allowances for Years 2000-2009				Years 2010 and Beyond	
			(A) Auction Reserve Deduction	(B) Repower-ing Deduction	(C)2 Total Annual Phase II	(D) 1993-1998 Auction Deduction	(E) Auction Reserve Deduction	(F)3 Total Annual Phase II
CA	San Bernardino	1	3	0	118	3	3	105
CA	San Bernardino	2	0	0	17	0	1	19
CA	Scattergood Gen Sta	1	19	0	752	19	19	641
CA	Scattergood Gen Sta	2	17	0	658	17	17	571
CA	Scattergood Gen Sta	3	0	0	262	0	7	250
CA	Silver Gate	1	0	0	0	0	0	0
CA	Silver Gate	2	0	0	0	0	0	0
CA	Silver Gate	3	0	0	0	0	0	0
CA	Silver Gate	4	0	0	0	0	0	0
CA	Silver Gate	5	0	0	0	0	0	0
CA	Silver Gate	6	0	0	0	0	0	0
CA	South Bay	1	67	1	2491	66	67	2303
CA	South Bay	2	49	1	1774	49	49	1683
CA	South Bay	3	59	1	2176	58	59	2024
CA	South Bay	4	16	0	603	16	16	554
CA	Valley Gen Station	1	3	0	122	3	3	101
CA	Valley Gen Station	2	3	0	141	3	3	120
CA	Valley Gen Station	3	11	0	389	11	11	389
CA	Valley Gen Station	4	9	0	351	9	9	295
CO	Arapahoe	1	6	0	221	6	6	208
CO	Arapahoe	2	7	0	247	7	7	229
CO	Arapahoe	3	5	0	181	5	5	172
CO	Arapahoe	4	53	1	1926	53	53	1829
CO	Cameo	2	25	0	904	25	25	852
CO	Cherokee	1	59	1	2137	59	59	2035
CO	Cherokee	2	79	1	2837	79	79	2722
CO	Cherokee	3	103	1	3760	103	103	3562
CO	Cherokee	4	206	2	7533	206	206	7132
CO	Comanche	1	213	2	7696	213	213	7363
CO	Comanche	2	187	2	6912	186	186	6450
CO	Craig	C1	222	2	8216	222	222	7678
CO	Craig	C2	213	2	7843	212	213	7352
CO	Craig	C3	62	1	2601	62	62	2149
CO	Hayden	H1	167	2	6061	167	167	5776
CO	Hayden	H2	255	3	9227	254	255	8810
CO	Martin Drake	5	32	0	1149	31	31	1089
CO	Martin Drake	6	55	1	2029	55	55	1911
CO	Martin Drake	7	88	1	3218	88	88	3043
CO	Nucla	1	33	0	1122	33	33	1124
CO	Pawnee	**2	0	0	0	0	0	0
CO	Pawnee	1	398	4	14439	397	398	13761
CO	Rawhide	101	39	0	1800	39	39	1352
CO	Ray D Nixon	**NA1	0	0	0	0	0	0
CO	Ray D Nixon	1	122	1	4476	122	122	4217
CO	Valmont	14	0	0	4	0	0	0

Table 2 - Phase II Allowance Allocations

State	Plant Name	Boiler1	Allowances for Years 2000-2009				Years 2010 and Beyond	
			(A) Auction Reserve Deduction	(B) Repower-ing Deduction	(C)2 Total Annual Phase II	(D) 1993-1998 Auction Deduction	(E) Auction Reserve Deduction	(F)3 Total Annual Phase II
CO	Valmont	21	0	0	20	0	0	20
CO	Valmont	24	0	0	0	0	0	0
CO	Valmont	5	86	1	3136	86	86	2983
CO	Zuni	1	10	0	340	10	10	341
CO	Zuni	2	0	0	0	0	0	6
CO	Zuni	3	0	0	5	0	0	9
CT	Bridgeport Harbor	BHB1	60	1	2078	60	60	2082
CT	Bridgeport Harbor	BHB2	137	1	4726	137	137	4735
CT	Bridgeport Harbor	BHB3	333	4	11477	332	332	11501
CT	Devon	3	28	0	980	28	28	981
CT	Devon	4A	5	0	170	5	5	171
CT	Devon	4B	5	0	171	5	5	172
CT	Devon	5A	4	0	155	4	4	156
CT	Devon	5B	4	0	155	4	4	156
CT	Devon	6	26	0	898	26	26	899
CT	Devon	7	81	1	2807	81	81	2813
CT	Devon	8	87	1	3002	87	87	3008
CT	English	EB13	3	0	114	3	3	113
CT	English	EB14	5	0	157	5	5	157
CT	Middletown	1	13	0	461	13	13	462
CT	Middletown	2	39	0	1328	38	38	1332
CT	Middletown	3	97	1	3338	97	97	3345
CT	Middletown	4	69	1	2389	69	69	2393
CT	Montville	5	35	0	1208	35	35	1210
CT	Montville	6	165	2	5673	164	164	5686
CT	New Haven Harbor	NHB1	379	4	13066	378	378	13092
CT	Norwalk Harbor	1	149	2	5139	149	149	5150
CT	Norwalk Harbor	2	158	2	5456	158	158	5467
DE	Edge Moor	3	103	1	3557	103	103	3564
DE	Edge Moor	4	183	2	6293	182	182	6307
DE	Edge Moor	5	187	2	6461	187	187	6473
DE	Hay Road	**3	5	0	158	5	5	158
DE	Indian River	1	87	1	2997	87	87	3002
DE	Indian River	2	92	1	3181	92	92	3188
DE	Indian River	3	158	2	5439	157	158	5451
DE	Indian River	4	389	4	13410	388	388	13438
DE	McKee Run	3	54	1	2584	53	53	1850
DE	Van Sant	**11	4	0	138	4	4	138
DC	Benning	15	15	0	517	15	15	518
DC	Benning	16	25	0	856	25	25	857
FL	Anclote (4)	1	298	3	13022	297	298	10297
FL	Anclote (4)	2	315	3	12950	314	315	10894
FL	Arvah B Hopkins	1	1	0	81	1	2	85
FL	Arvah B Hopkins	2	160	2	5522	160	160	5532
FL	Avon Park	2	14	0	495	14	14	495

Table 2 - Phase II Allowance Allocations

State	Plant Name	Boiler1	Allowances for Years 2000-2009				Years 2010 and Beyond	
			(A) Auction Reserve Deduction	(B) Repower-ing Deduction	(C)2 Total Annual Phase II	(D) 1993-1998 Auction Deduction	(E) Auction Reserve Deduction	(F)3 Total Annual Phase II
FL	Big Bend	BB01	352	4	12132	351	351	12156
FL	Big Bend	BB02	354	4	12196	353	353	12221
FL	Big Bend	BB03	332	4	11444	331	331	11468
FL	Big Bend	BB04	255	3	8780	254	254	8799
FL	C D McIntosh Jr	1	26	0	907	26	26	908
FL	C D McIntosh Jr	2	30	0	1029	30	30	1031
FL	C D McIntosh Jr	3	288	3	9928	287	288	9948
FL	Cape Canaveral	PCC1	123	1	4224	122	122	4232
FL	Cape Canaveral	PCC2	144	2	4961	143	144	4969
FL	Combined Cycle 1	32432	2	0	60	2	2	60
FL	Crist	1	1	0	35	1	1	35
FL	Crist	2	0	0	3	0	0	3
FL	Crist	3	0	0	4	0	0	4
FL	Crist	4	72	1	2467	71	71	2473
FL	Crist	5	70	1	2430	70	70	2435
FL	Crist	6	244	3	8396	243	243	8413
FL	Crist	7	363	4	12522	362	363	12545
FL	Crystal River	1	360	4	12425	359	360	12449
FL	Crystal River	2	415	4	14291	413	414	14320
FL	Crystal River	4	686	8	23651	684	686	23697
FL	Crystal River	5	734	9	25248	732	732	25301
FL	CT	**1	0	0	0	0	0	0
FL	CT	**2	0	0	0	0	0	0
FL	CT	**3	0	0	0	0	0	0
FL	CT	**4	0	0	0	0	0	0
FL	Cutler	PCU5	0	0	0	0	0	4
FL	Cutler	PCU6	0	0	0	0	0	9
FL	Debary	**10	20	0	705	20	20	706
FL	Debary	**7	20	0	705	20	20	706
FL	Debary	**8	20	0	705	20	20	706
FL	Debary	**9	20	0	705	20	20	706
FL	Deerhaven	**NA2	0	0	0	0	0	0
FL	Deerhaven	B1	1	0	98	1	3	114
FL	Deerhaven	B2	240	3	8268	239	239	8286
FL	Deerhaven	CT3	0	0	0	0	0	0
FL	F J Gannon	GB01	97	1	3842	97	97	3358
FL	F J Gannon	GB02	120	1	4425	120	120	4148
FL	F J Gannon	GB03	164	2	5664	164	164	5675
FL	F J Gannon	GB04	179	2	6223	179	179	6185
FL	F J Gannon	GB05	190	2	6537	189	189	6551
FL	F J Gannon	GB06	292	3	10081	292	292	10101
FL	Fort Myers	PFM1	93	1	3188	92	92	3194
FL	Fort Myers	PFM2	274	3	9457	273	274	9475
FL	G E Turner	2	2	0	543	2	2	82
FL	G E Turner	3	21	0	718	21	21	720

Table 2 - Phase II Allowance Allocations

State	Plant Name	Boiler1	Allowances for Years 2000-2009				Years 2010 and Beyond	
			(A) Auction Reserve Deduction	(B) Repower-ing Deduction	(C)2 Total Annual Phase II	(D) 1993-1998 Auction Deduction	(E) Auction Reserve Deduction	(F)3 Total Annual Phase II
FL	G E Turner	4	18	0	611	18	18	611
FL	Henry D King	7	2	0	63	2	2	65
FL	Henry D King	8	0	0	26	0	1	34
FL	Higgins	1	12	0	423	12	12	423
FL	Higgins	2	14	0	475	14	14	475
FL	Higgins	3	13	0	969	13	13	434
FL	Hookers Point	HB01	4	0	177	4	4	177
FL	Hookers Point	HB02	5	0	207	5	5	205
FL	Hookers Point	HB03	13	0	469	13	13	468
FL	Hookers Point	HB04	20	0	701	20	20	702
FL	Hookers Point	HB05	36	0	1253	36	36	1252
FL	Hookers Point	HB06	14	0	478	14	14	478
FL	Indian River	**C	0	0	0	0	0	0
FL	Indian River	**D	19	0	639	18	18	640
FL	Indian River	1	35	0	1192	34	34	1194
FL	Indian River	2	46	0	1569	45	45	1572
FL	Indian River	3	106	1	3646	105	106	3652
FL	Intercession City	**10	20	0	705	20	20	706
FL	Intercession City	**7	20	0	705	20	20	706
FL	Intercession City	**8	20	0	705	20	20	706
FL	Intercession City	**9	20	0	705	20	20	706
FL	J D Kennedy	10	57	1	1975	57	57	1980
FL	J D Kennedy	8	6	0	196	6	6	196
FL	J D Kennedy	9	16	0	553	16	16	553
FL	J R Kelly	JRK8	1	0	58	1	2	67
FL	Lansing Smith	1	188	2	6476	187	188	6489
FL	Lansing Smith	2	221	2	7601	220	220	7616
FL	Larsen Memorial	**8	19	0	665	19	19	666
FL	Larsen Memorial	**9	0	0	0	0	0	0
FL	Larsen Memorial	7	9	0	307	9	9	308
FL	Lauderdale	4GT1	28	0	948	27	27	950
FL	Lauderdale	4GT2	28	0	948	27	27	950
FL	Lauderdale	5GT1	28	0	948	27	27	950
FL	Lauderdale	5GT2	28	0	948	27	27	950
FL	Manatee	PMT1	400	4	13773	398	399	13799
FL	Manatee	PMT2	368	4	12697	367	368	12716
FL	Martin	HRSG3A	37	0	1275	37	37	1277
FL	Martin	HRSG3B	37	0	1275	37	37	1277
FL	Martin	HRSG4A	37	0	1275	37	37	1277
FL	Martin	HRSG4B	37	0	1275	37	37	1277
FL	Martin	PMR1	148	2	5092	147	147	5102
FL	Martin	PMR2	175	2	6039	175	175	6049
FL	NA 1 -- 7238	**1	0	0	0	0	0	0
FL	Northside	1	142	2	6222	141	142	4897
FL	Northside	2	30	0	6268	30	30	1048

Table 2 - Phase II Allowance Allocations

State	Plant Name	Boiler1	Allowances for Years 2000-2009				Years 2010 and Beyond	
			(A) Auction Reserve Deduction	(B) Repower-ing Deduction	(C)2 Total Annual Phase II	(D) 1993-1998 Auction Deduction	(E) Auction Reserve Deduction	(F)3 Total Annual Phase II
FL	Northside	3	193	2	11124	192	192	6658
FL	P L Bartow	1	71	1	2805	71	71	2455
FL	P L Bartow	2	70	1	2961	70	70	2431
FL	P L Bartow	3	157	2	5428	157	157	5439
FL	Port Everglades	PPE1	68	1	2339	68	68	2343
FL	Port Everglades	PPE2	70	1	2413	70	70	2417
FL	Port Everglades	PPE3	171	2	5880	170	170	5891
FL	Port Everglades	PPE4	173	2	5962	172	173	5973
FL	Putnam	HRSG1	48	1	1643	48	48	1647
FL	Putnam	HRSG1	48	1	1643	48	48	1647
FL	Putnam	HRSG2	45	0	1568	45	45	1570
FL	Putnam	HRSG2	45	0	1568	45	45	1570
FL	Riviera	PRV2	3	0	94	3	3	94
FL	Riviera	PRV3	104	1	3573	103	103	3580
FL	Riviera	PRV4	103	1	3545	102	103	3551
FL	S O Purdom	7	13	0	443	13	13	444
FL	Sanford	PSN3	31	0	1085	31	31	1087
FL	Sanford	PSN4	96	1	8614	96	96	3323
FL	Sanford	PSN5	93	1	3221	93	93	3220
FL	Scholz	1	57	1	1958	57	57	1963
FL	Scholz	2	59	1	2050	59	59	2054
FL	Seminole	1	533	7	18381	532	532	18420
FL	Seminole	2	533	7	18381	532	532	18420
FL	Southside	1	27	0	930	27	27	932
FL	Southside	2	28	0	963	28	28	964
FL	Southside	3	7	0	227	7	7	227
FL	Southside	4	18	0	616	18	18	617
FL	Southside	5	53	1	1810	52	52	1815
FL	St Johns River Pwr	1	336	4	11582	335	335	11605
FL	St Johns River Pwr	2	330	4	11370	329	329	11395
FL	Stanton Energy	1	328	4	11290	327	327	11314
FL	Stanton Energy	2	0	0	0	0	0	0
FL	Stock Island	1	75	1	2571	74	74	2578
FL	Stock Island D1	**NA1	3	0	100	3	3	100
FL	Stock Island D2	**NA2	3	0	100	3	3	100
FL	Suwannee River	1	7	0	254	7	7	255
FL	Suwannee River	2	7	0	253	7	7	253
FL	Suwannee River	3	19	0	649	19	19	649
FL	Tom G Smith	S-3	0	0	9	0	0	11
FL	Tom G Smith	S-4	2	0	80	2	2	80
FL	Turkey Point	PTP1	170	2	5868	170	170	5879
FL	Turkey Point	PTP2	172	2	5911	171	171	5924
FL	Vero Beach Munic	**5	9	0	317	9	9	318
FL	Vero Beach Munic	3	9	0	315	9	9	316
FL	Vero Beach Munic	4	2	0	107	2	3	116

Table 2 - Phase II Allowance Allocations

State	Plant Name	Boiler1	Allowances for Years 2000-2009				Years 2010 and Beyond	
			(A) Auction Reserve Deduction	(B) Repower-ing Deduction	(C)2 Total Annual Phase II	(D) 1993-1998 Auction Deduction	(E) Auction Reserve Deduction	(F)3 Total Annual Phase II
GA	Arkwright	1	37	0	1449	37	37	1291
GA	Arkwright	2	39	0	1470	39	39	1354
GA	Arkwright	3	45	0	1539	45	45	1542
GA	Arkwright	4	36	0	1255	36	36	1257
GA	Atkinson	A1A	0	0	2	0	0	2
GA	Atkinson	A1B	0	0	2	0	0	2
GA	Atkinson	A2	0	0	4	0	0	4
GA	Atkinson	A3	0	0	6	0	0	5
GA	Atkinson	A4	0	0	5	0	0	5
GA	Bowen	1BLR	667	8	23609	665	667	23656
GA	Bowen	2BLR	686	8	24280	684	686	24329
GA	Bowen	3BLR	875	10	30932	873	874	30994
GA	Bowen	4BLR	875	10	30924	873	873	30987
GA	Hammond	1	107	1	3785	107	107	3793
GA	Hammond	2	112	1	3974	112	112	3981
GA	Hammond	3	109	1	3841	108	108	3850
GA	Hammond	4	459	5	16227	457	458	16260
GA	Harllee Branch	1	286	3	9856	285	285	9876
GA	Harllee Branch	2	338	4	11657	337	338	11681
GA	Harllee Branch	3	465	5	16039	464	464	16072
GA	Harllee Branch	4	462	5	15916	461	461	15949
GA	Jack McDonough	MB1	243	3	8581	242	242	8599
GA	Jack McDonough	MB2	251	3	8882	250	251	8900
GA	Kraft	1	44	0	1530	44	44	1533
GA	Kraft	2	42	0	1510	42	42	1466
GA	Kraft	3	86	1	2963	86	86	2968
GA	Kraft	4	13	0	436	13	13	437
GA	McIntosh	1	161	2	5554	161	161	5565
GA	McManus	1	3	0	844	3	3	89
GA	McManus	2	6	0	1279	6	6	198
GA	Mitchell	3	158	2	5461	158	158	5472
GA	Riverside	12	0	0	5	0	0	5
GA	Scherer	1	611	8	21075	610	610	21121
GA	Scherer	2	616	8	21224	614	615	21270
GA	Scherer	3	617	8	21258	615	616	21304
GA	Scherer	4	616	8	21234	614	615	21280
GA	Wansley	1	863	10	30507	861	862	30567
GA	Wansley	2	798	10	28201	796	797	28259
GA	Yates	Y1BR	88	1	3106	88	88	3113
GA	Yates	Y2BR	86	1	3035	86	86	3041
GA	Yates	Y3BR	85	1	2997	84	85	3003
GA	Yates	Y4BR	109	1	3842	108	108	3851
GA	Yates	Y5BR	115	1	4055	114	114	4063
GA	Yates	Y6BR	302	3	10675	301	301	10696
GA	Yates	Y7BR	297	3	10499	296	296	10521

Table 2 - Phase II Allowance Allocations

State	Plant Name	Boiler1	Allowances for Years 2000-2009				Years 2010 and Beyond	
			(A) Auction Reserve Deduction	(B) Repower-ing Deduction	(C)2 Total Annual Phase II	(D) 1993-1998 Auction Deduction	(E) Auction Reserve Deduction	(F)3 Total Annual Phase II
IL	Baldwin	1	512	7	18109	510	511	18146
IL	Baldwin	2	541	7	19147	540	540	19186
IL	Baldwin	3	518	7	18343	517	518	18380
IL	Coffeen	01	144	2	5083	143	143	5094
IL	Coffeen	02	434	5	15376	433	434	15406
IL	Collins	1	38	0	1327	38	38	1329
IL	Collins	2	33	0	1133	33	33	1135
IL	Collins	3	58	1	2000	58	58	2004
IL	Collins	4	47	1	1632	47	47	1636
IL	Collins	5	52	1	1809	52	52	1812
IL	Crawford	7	105	1	7235	104	105	3617
IL	Crawford	8	162	2	9848	162	162	5602
IL	Dallman	31	40	0	1385	40	40	1388
IL	Dallman	32	45	0	1568	45	45	1570
IL	Dallman	33	151	2	5197	150	151	5208
IL	Duck Creek	1	325	4	11197	324	324	11220
IL	E D Edwards	1	70	1	2898	70	70	2414
IL	E D Edwards	2	196	2	6914	195	195	6760
IL	E D Edwards	3	251	3	9122	250	250	8663
IL	Fisk	19	104	1	10031	104	104	3602
IL	Grand Tower	07	7	0	248	7	7	248
IL	Grand Tower	08	7	0	235	7	7	236
IL	Grand Tower	09	72	1	2546	72	72	2551
IL	Havana	1	0	0	35	0	0	35
IL	Havana	2	0	0	45	0	0	45
IL	Havana	3	0	0	35	0	0	35
IL	Havana	4	0	0	35	0	0	35
IL	Havana	5	0	0	35	0	0	35
IL	Havana	6	0	0	35	0	0	35
IL	Havana	7	0	0	35	0	0	35
IL	Havana	8	0	0	35	0	0	35
IL	Havana	9	195	2	8803	194	195	6731
IL	Hennepin	1	59	1	2017	58	58	2023
IL	Hennepin	2	224	2	7938	224	224	7953
IL	Hutsonville	05	64	1	2222	64	64	2227
IL	Hutsonville	06	67	1	2301	67	67	2306
IL	Joliet 29	71	169	2	7578	169	169	5837
IL	Joliet 29	72	138	1	6176	137	138	4757
IL	Joliet 29	81	158	2	7294	158	158	5471
IL	Joliet 29	82	164	2	7556	164	164	5668
IL	Joliet 9	5	170	2	8674	170	170	5886
IL	Joppa Steam	1	153	2	5286	153	153	5297
IL	Joppa Steam	2	131	1	4522	131	131	4530
IL	Joppa Steam	3	149	2	5151	149	149	5162
IL	Joppa Steam	4	138	2	4771	138	138	4781

Table 2 - Phase II Allowance Allocations

State	Plant Name	Boiler1	Allowances for Years 2000-2009				Years 2010 and Beyond	
			(A) Auction Reserve Deduction	(B) Repower-ing Deduction	(C)2 Total Annual Phase II	(D) 1993-1998 Auction Deduction	(E) Auction Reserve Deduction	(F)3 Total Annual Phase II
IL	Joppa Steam	5	139	2	4793	139	139	4803
IL	Joppa Steam	6	129	1	4459	129	129	4467
IL	Kincaid	1	384	4	13592	383	383	13620
IL	Kincaid	2	423	5	14977	422	423	15006
IL	Lakeside	7	74	1	2553	74	18	633
IL	Lakeside	8	42	0	1446	42	9	326
IL	Marion	1	60	1	2079	60	14	468
IL	Marion	2	62	1	2129	62	14	479
IL	Marion	3	67	1	2309	67	15	520
IL	Marion	4	198	2	6839	198	198	6853
IL	Meredosia	01	9	0	298	9	9	299
IL	Meredosia	02	9	0	322	9	9	322
IL	Meredosia	03	8	0	280	8	8	281
IL	Meredosia	04	7	0	255	7	7	255
IL	Meredosia	05	169	2	5989	169	169	6000
IL	Meredosia	06	1	0	46	1	1	46
IL	Newton	1	453	5	15620	452	452	15652
IL	Newton	2	404	4	13928	403	403	13956
IL	Powerton	51	244	3	10701	244	244	8443
IL	Powerton	52	241	3	10571	241	241	8341
IL	Powerton	61	248	3	10513	248	248	8580
IL	Powerton	62	250	3	10596	250	250	8647
IL	R S Wallace	10	5	0	2432	5	5	177
IL	R S Wallace	9	2	0	901	2	2	61
IL	Venice	1	0	0	5	0	0	5
IL	Venice	2	0	0	2	0	0	2
IL	Venice	3	0	0	17	0	0	17
IL	Venice	4	0	0	14	0	0	14
IL	Venice	5	0	0	10	0	0	10
IL	Venice	6	0	0	10	0	0	10
IL	Venice	7	0	0	2	0	0	2
IL	Venice	8	0	0	2	0	0	2
IL	Vermillion	1	82	1	2834	82	82	2840
IL	Vermillion	2	108	1	3830	108	108	3837
IL	Waukegan	17	43	0	3104	182	43	1501
IL	Waukegan	7	183	2	8212	145	183	6314
IL	Waukegan	8	145	2	7838	43	145	5005
IL	Will County	1	74	1	5321	74	74	2554
IL	Will County	2	73	1	4849	72	72	2505
IL	Will County	3	150	2	6993	150	150	5197
IL	Will County	4	264	3	13801	264	264	9133
IL	Wood River	1	0	0	3	0	0	3
IL	Wood River	2	0	0	3	0	0	3
IL	Wood River	3	0	0	3	0	0	3
IL	Wood River	4	51	1	2258	51	51	1761

Table 2 - Phase II Allowance Allocations

State	Plant Name	Boiler1	Allowances for Years 2000-2009				Years 2010 and Beyond	
			(A) Auction Reserve Deduction	(B) Repower-ing Deduction	(C)2 Total Annual Phase II	(D) 1993-1998 Auction Deduction	(E) Auction Reserve Deduction	(F)3 Total Annual Phase II
IL	Wood River	5	275	3	9478	274	274	9498
IN	A B Brown	**4	19	0	639	18	18	640
IN	A B Brown	1	155	2	5356	155	155	5368
IN	A B Brown	2	131	1	4529	131	131	4538
IN	Bailly	7	136	1	4811	136	136	4819
IN	Bailly	8	194	2	6869	194	194	6882
IN	Breed	1	225	2	7975	225	225	7990
IN	Cayuga	1	407	4	14386	405	406	14415
IN	Cayuga	2	416	5	14710	415	415	14740
IN	Cayuga	4	0	0	0	0	0	0
IN	Cayuga	5	0	0	0	0	0	0
IN	Cayuga	6	0	0	0	0	0	0
IN	Clifty Creek	1	246	3	8462	245	245	8480
IN	Clifty Creek	2	241	3	8321	241	241	8338
IN	Clifty Creek	3	249	3	8570	248	248	8589
IN	Clifty Creek	4	245	3	8431	244	244	8449
IN	Clifty Creek	5	236	3	8129	235	235	8146
IN	Clifty Creek	6	248	3	8557	248	248	8574
IN	Dean H Mitchell	11	35	0	2658	35	35	1225
IN	Dean H Mitchell	4	43	0	3116	43	43	1473
IN	Dean H Mitchell	5	54	1	3017	54	54	1860
IN	Dean H Mitchell	6	48	1	2969	48	48	1672
IN	Edwardsport	6-1	0	0	0	0	0	0
IN	Edwardsport	7-1	10	0	347	10	10	348
IN	Edwardsport	7-2	10	0	354	10	10	355
IN	Edwardsport	8-1	11	0	375	11	11	375
IN	Elmer W Stout	1	0	0	0	0	0	0
IN	Elmer W Stout	2	0	0	0	0	0	0
IN	Elmer W Stout	3	0	0	0	0	0	0
IN	Elmer W Stout	4	0	0	0	0	0	0
IN	Elmer W Stout	5	0	0	0	0	0	0
IN	Elmer W Stout	6	0	0	0	0	0	0
IN	Elmer W Stout	7	0	0	0	0	0	0
IN	Elmer W Stout	8	0	0	0	0	0	0
IN	Elmer W Stout	9	0	0	1	0	0	1
IN	Elmer W Stout	10	0	0	2	0	0	2
IN	Elmer W Stout	50	47	1	1673	47	47	1677
IN	Elmer W Stout	60	58	1	2057	58	58	2061
IN	Elmer W Stout	70	288	3	10177	287	287	10198
IN	F B Culley	1	24	0	827	24	24	828
IN	F B Culley	2	50	1	1758	50	50	1762
IN	F B Culley	3	207	2	7316	206	206	7332
IN	Frank E Ratts	1SG1	102	1	3592	101	101	3600
IN	Frank E Ratts	2SG1	103	1	3659	103	103	3666
IN	Gibson	1	492	5	17415	491	491	17449

Table 2 - Phase II Allowance Allocations

State	Plant Name	Boiler1	Allowances for Years 2000-2009				Years 2010 and Beyond	
			(A) Auction Reserve Deduction	(B) Repower-ing Deduction	(C)2 Total Annual Phase II	(D) 1993-1998 Auction Deduction	(E) Auction Reserve Deduction	(F)3 Total Annual Phase II
IN	Gibson	2	500	5	17678	498	499	17713
IN	Gibson	3	500	5	17709	499	500	17743
IN	Gibson	4	491	5	17384	490	490	17419
IN	Gibson	5	527	7	18180	526	527	18217
IN	H T Pritchard	1	0	0	0	0	0	0
IN	H T Pritchard	2	0	0	1	0	0	1
IN	H T Pritchard	3	7	0	240	7	7	240
IN	H T Pritchard	4	15	0	533	15	15	534
IN	H T Pritchard	5	17	0	596	17	17	597
IN	H T Pritchard	6	70	1	2487	70	70	2492
IN	Merom	1SG1	433	5	14920	432	432	14951
IN	Merom	2SG1	430	5	14818	429	429	14850
IN	Michigan City	12	284	3	10049	283	283	10069
IN	Michigan City	4	26	0	909	26	26	912
IN	Michigan City	5	29	0	1010	29	29	1012
IN	Michigan City	6	30	0	1019	30	30	1021
IN	NA 1 -- 7221	**1	0	0	0	0	0	0
IN	NA 1 -- 7221	**3	0	0	0	0	0	0
IN	NA 1 -- 7221	**4	0	0	0	0	0	0
IN	Noblesville	1	2	0	66	2	2	66
IN	Noblesville	2	2	0	54	2	2	54
IN	Noblesville	3	1	0	40	1	1	40
IN	Petersburg	1	200	2	7086	200	200	7100
IN	Petersburg	2	395	4	13961	393	394	13988
IN	Petersburg	3	490	5	16881	488	489	16916
IN	Petersburg	4	469	5	16150	467	468	16183
IN	R Gallagher	1	82	1	2908	82	82	2914
IN	R Gallagher	2	89	1	3137	88	89	3144
IN	R Gallagher	3	80	1	2814	79	79	2821
IN	R Gallagher	4	83	1	2932	83	83	2938
IN	R M Schahfer	14	141	2	10355	141	141	4868
IN	R M Schahfer	15	129	1	10692	129	129	4461
IN	R M Schahfer	17	151	2	5222	151	151	5233
IN	R M Schahfer	18	151	2	5187	150	150	5199
IN	Rockport	MB1	958	11	32992	956	957	33061
IN	Rockport	MB2	958	11	32992	956	957	33061
IN	State Line	3	100	1	4725	100	100	3452
IN	State Line	4	175	2	6922	174	174	6033
IN	Tanners Creek	U1	59	1	2775	59	59	2037
IN	Tanners Creek	U2	62	1	2797	62	62	2138
IN	Tanners Creek	U3	66	1	4079	66	66	2287
IN	Tanners Creek	U4	302	3	10702	302	302	10722
IN	Wabash River	1	49	1	1722	49	49	1726
IN	Wabash River	2	39	0	1392	39	39	1394
IN	Wabash River	3	46	0	1616	46	46	1619

Table 2 - Phase II Allowance Allocations

State	Plant Name	Boiler1	Allowances for Years 2000-2009				Years 2010 and Beyond	
			(A) Auction Reserve Deduction	(B) Repower-ing Deduction	(C)2 Total Annual Phase II	(D) 1993-1998 Auction Deduction	(E) Auction Reserve Deduction	(F)3 Total Annual Phase II
IN	Wabash River	4	44	0	1532	44	44	1534
IN	Wabash River	5	45	0	1582	45	45	1584
IN	Wabash River	6	150	2	5293	149	149	5304
IN	Warrick	4	297	3	10506	296	296	10527
IN	Whitewater Valley	1	65	1	2236	65	65	2241
IN	Whitewater Valley	2	194	2	6693	194	194	6706
IA	Ames	7	12	0	403	12	12	403
IA	Ames	8	53	1	1833	53	53	1837
IA	Burlington	1	130	1	4498	130	130	4507
IA	Council Bluffs	1	19	0	1110	19	19	653
IA	Council Bluffs	2	27	0	1651	27	27	928
IA	Council Bluffs	3	463	5	15951	462	462	15985
IA	Des Moines	**5	0	0	0	0	0	0
IA	Des Moines	10	5	0	163	5	5	164
IA	Des Moines	11	7	0	244	7	7	245
IA	Dubuque	1	32	0	1120	32	32	1122
IA	Dubuque	5	9	0	305	9	9	306
IA	Earl F Wisdom	1	11	0	379	11	11	380
IA	Fair Station	2	162	2	5573	161	161	5585
IA	George Neal North	1	67	1	2309	67	67	2314
IA	George Neal North	2	128	1	9081	127	127	4405
IA	George Neal North	3	248	3	12293	247	247	8556
IA	George Neal South	4	439	5	15139	438	438	15171
IA	Graettinger	2	0	0	10	0	0	10
IA	Grinnell	**2	6	0	189	6	6	190
IA	Lansing	3	14	0	478	14	14	479
IA	Lansing	4	126	1	4628	125	126	4344
IA	Lime Creek	**1	7	0	255	7	7	255
IA	Lime Creek	**2	7	0	255	7	7	255
IA	Louisa	101	452	5	15588	451	451	15620
IA	Maynard Station	1	1	0	31	1	1	31
IA	Milton Knapp	2	168	2	5793	168	168	5805
IA	Muscatine	8	39	0	1362	39	39	1364
IA	Muscatine	9	59	1	2026	59	59	2030
IA	NA 1 – 7230	**2	0	0	0	0	0	0
IA	Ottumwa	1	554	7	19088	552	553	19127
IA	Pella	6	22	0	757	22	22	758
IA	Pella	7	28	0	978	28	28	979
IA	Pella	8	1	0	68	1	1	27
IA	Prairie Creek	3	21	0	725	21	21	727
IA	Prairie Creek	4	100	1	3433	99	99	3440
IA	Riverside	9	51	1	1744	50	51	1748
IA	Sixth Street	1	24	0	814	24	24	815
IA	Sixth Street	2	6	0	177	6	6	177
IA	Sixth Street	3	6	0	154	6	6	154

Table 2 - Phase II Allowance Allocations

State	Plant Name	Boiler1	Allowances for Years 2000-2009				Years 2010 and Beyond	
			(A) Auction Reserve Deduction	(B) Repower-ing Deduction	(C)2 Total Annual Phase II	(D) 1993-1998 Auction Deduction	(E) Auction Reserve Deduction	(F)3 Total Annual Phase II
IA	Sixth Street	4	1	0	77	1	1	77
IA	Sixth Street	5	10	0	308	10	10	308
IA	Streeter Station	7	16	0	554	16	16	555
IA	Sutherland	1	6	0	199	6	6	200
IA	Sutherland	2	11	0	376	11	11	376
IA	Sutherland	3	64	1	2190	63	63	2196
KS	Arthur Mullergren	3	0	0	1	0	0	1
KS	Cimarron River	1	0	0	12	0	0	11
KS	Coffeyville	4	0	0	11	0	0	10
KS	East 12th Street	4	0	0	10	0	0	8
KS	Garden City	S-2	0	0	0	0	0	0
KS	Gordon Evans	1	0	0	64	0	2	56
KS	Gordon Evans	2	0	0	25	0	1	21
KS	Holcomb	SGU1	116	1	4010	116	116	4018
KS	Hutchinson	1	0	0	0	0	0	0
KS	Hutchinson	2	0	0	0	0	0	0
KS	Hutchinson	3	0	0	0	0	0	0
KS	Hutchinson	4	0	0	18	0	0	16
KS	Jeffery Energy Ctr	1	496	5	17108	495	495	17143
KS	Jeffery Energy Ctr	2	525	7	18080	523	524	18118
KS	Jeffery Energy Ctr	3	598	7	20628	597	597	20672
KS	Judson Large	4	0	0	39	0	1	34
KS	Kaw	1	23	0	787	23	23	789
KS	Kaw	2	18	0	619	18	18	620
KS	Kaw	3	15	0	516	15	15	517
KS	Kingman	**9	1	0	51	1	1	51
KS	LaCygne	1	417	5	17941	416	416	14405
KS	LaCygne	2	437	5	15056	436	436	15087
KS	Lawrence	2	0	0	2	0	0	2
KS	Lawrence	3	18	0	2148	18	18	625
KS	Lawrence	4	27	0	1819	27	27	948
KS	Lawrence	5	109	1	5376	108	108	3752
KS	McPherson 2	1	0	0	1	0	0	1
KS	Mulvane	**7	0	0	5	0	0	5
KS	Mulvane	**8	0	0	5	0	0	5
KS	Murray Gill	1	0	0	1	0	0	1
KS	Murray Gill	2	0	0	5	0	0	5
KS	Murray Gill	3	0	0	50	0	1	44
KS	Murray Gill	4	0	0	62	0	2	54
KS	Nearman Creek	N1	201	2	6928	200	201	6942
KS	Neosho	7	0	0	13	0	0	13
KS	Quindaro	1	59	1	2031	59	59	2035
KS	Quindaro	2	60	1	2078	60	60	2082
KS	Riverton	39	30	0	1039	30	30	1041
KS	Riverton	40	51	1	1763	51	51	1766

Table 2 - Phase II Allowance Allocations

State	Plant Name	Boiler1	Allowances for Years 2000-2009				Years 2010 and Beyond	
			(A) Auction Reserve Deduction	(B) Repower-ing Deduction	(C)2 Total Annual Phase II	(D) 1993-1998 Auction Deduction	(E) Auction Reserve Deduction	(F)3 Total Annual Phase II
KS	Russell	**11	1	0	31	1	1	31
KS	Russell	**12	1	0	30	1	1	30
KS	Tecumseh	10	43	0	3916	42	43	1470
KS	Tecumseh	9	27	0	2256	27	27	921
KS	Wamego	7	0	0	0	0	0	0
KY	Big Sandy	BSU1	186	2	6428	186	186	6441
KY	Big Sandy	BSU2	538	7	19711	537	537	18584
KY	Cane Run	**12	0	0	0	0	0	0
KY	Cane Run	**13	0	0	0	0	0	0
KY	Cane Run	3	1	0	39	1	1	39
KY	Cane Run	4	79	1	4521	79	79	2726
KY	Cane Run	5	125	1	4340	125	125	4330
KY	Cane Run	6	157	2	5498	157	157	5436
KY	Coleman	C1	137	1	4853	137	137	4862
KY	Coleman	C2	156	2	5534	156	156	5545
KY	Coleman	C3	150	2	5322	150	150	5332
KY	Cooper	1	91	1	3209	90	91	3216
KY	Cooper	2	187	2	6606	186	186	6619
KY	D B Wilson	W1	362	4	12461	361	361	12487
KY	Dale	3	49	1	1983	49	49	1693
KY	Dale	4	41	0	1847	40	40	1400
KY	E W Brown	1	87	1	3065	86	86	3071
KY	E W Brown	2	164	2	5805	164	164	5817
KY	E W Brown	3	318	3	11251	317	317	11273
KY	East Bend	2	531	7	18315	530	530	18354
KY	Elmer Smith	1	79	1	2804	79	79	2810
KY	Elmer Smith	2	176	2	6211	175	175	6224
KY	Ghent	1	346	4	12248	345	346	12272
KY	Ghent	2	291	3	12734	290	290	10038
KY	Ghent	3	405	4	13956	404	404	13985
KY	Ghent	4	398	4	13713	397	397	13742
KY	Green River	1	0	0	130	0	0	2
KY	Green River	2	0	0	851	0	0	16
KY	Green River	3	0	0	744	0	0	13
KY	Green River	4	82	1	2825	82	82	2830
KY	Green River	5	95	1	3371	95	95	3377
KY	H L Spurlock	1	278	3	9821	277	277	9841
KY	H L Spurlock	2	481	5	16586	480	480	16621
KY	Henderson 1	6	24	0	810	23	23	812
KY	HMP&L Station 2	H1	163	2	5756	162	162	5769
KY	HMP&L Station 2	H2	168	2	5934	167	167	5946
KY	Mill Creek	1	223	2	8080	222	222	7696
KY	Mill Creek	2	227	2	8140	227	227	7855
KY	Mill Creek	3	319	3	10979	318	318	11001
KY	Mill Creek	4	395	4	13618	394	394	13645

Table 2 - Phase II Allowance Allocations

State	Plant Name	Boiler1	Allowances for Years 2000-2009				Years 2010 and Beyond	
			(A) Auction Reserve Deduction	(B) Repower-ing Deduction	(C)2 Total Annual Phase II	(D) 1993-1998 Auction Deduction	(E) Auction Reserve Deduction	(F)3 Total Annual Phase II
KY	NA 1 -- 7220	**3	0	0	0	0	0	0
KY	NA 1 -- 7220	**4	0	0	0	0	0	0
KY	NA 1 -- 7220	**5	0	0	0	0	0	0
KY	Paradise	1	314	3	10818	313	313	10841
KY	Paradise	2	357	4	12300	356	356	12326
KY	Paradise	3	722	9	25504	720	721	25556
KY	Pineville	3	12	0	914	12	12	424
KY	R D Green	G1	154	2	5292	153	153	5303
KY	R D Green	G2	185	2	6376	184	185	6389
KY	Robert Reid	R1	27	0	942	27	27	944
KY	Shawnee	1	76	1	3643	76	76	2622
KY	Shawnee	10	138	2	4893	138	138	4903
KY	Shawnee	2	78	1	3672	78	78	2702
KY	Shawnee	3	88	1	3707	88	88	3043
KY	Shawnee	4	88	1	3593	87	87	3025
KY	Shawnee	5	86	1	3825	85	85	2954
KY	Shawnee	6	94	1	3711	94	94	3242
KY	Shawnee	7	104	1	3639	103	104	3581
KY	Shawnee	8	99	1	3570	99	99	3427
KY	Shawnee	9	106	1	3665	106	106	3672
KY	Trimble County	1	279	3	9631	279	279	9651
KY	Tyrone	1	0	0	0	0	0	0
KY	Tyrone	2	0	0	0	0	0	0
KY	Tyrone	3	0	0	0	0	0	0
KY	Tyrone	4	0	0	0	0	0	0
KY	Tyrone	5	20	0	1713	20	20	675
LA	A B Paterson	3	0	0	7	0	0	4
LA	A B Paterson	4	0	0	8	0	0	6
LA	Arsenal Hill	5A	0	0	30	0	1	18
LA	Big Cajun 1	1B1	0	0	27	0	1	37
LA	Big Cajun 1	1B2	0	0	27	0	1	34
LA	Big Cajun 2	2B1	415	4	14864	414	414	14322
LA	Big Cajun 2	2B2	409	4	14636	408	409	14142
LA	Big Cajun 2	2B3	408	4	14653	407	408	14106
LA	Coughlin	6	0	0	46	0	1	34
LA	Coughlin	7	0	0	128	0	4	139
LA	D G Hunter	3	0	0	0	0	0	9
LA	D G Hunter	4	0	0	32	0	1	24
LA	Doc Bonin	1	0	0	12	0	0	17
LA	Doc Bonin	2	0	0	24	0	1	30
LA	Doc Bonin	3	0	0	45	0	3	89
LA	Dolet Hills	1	595	7	20494	593	593	20535
LA	Houma	15	0	0	10	0	0	14
LA	Houma	16	0	0	14	0	1	28
LA	Lieberman	3	0	0	86	0	2	85

Table 2 - Phase II Allowance Allocations

State	Plant Name	Boiler1	Allowances for Years 2000-2009				Years 2010 and Beyond	
			(A) Auction Reserve Deduction	(B) Repower-ing Deduction	(C)2 Total Annual Phase II	(D) 1993-1998 Auction Deduction	(E) Auction Reserve Deduction	(F)3 Total Annual Phase II
LA	Lieberman	4	0	0	72	0	2	63
LA	Little Gypsy	1	1	0	245	1	6	223
LA	Little Gypsy	2	2	0	378	2	10	351
LA	Little Gypsy	3	3	0	543	3	14	473
LA	Louisiana 1	1A	0	0	116	0	0	17
LA	Louisiana 1	2A	0	0	2	0	0	17
LA	Louisiana 1	3A	0	0	2	0	0	17
LA	Louisiana 2	10	0	0	0	0	0	0
LA	Louisiana 2	11	0	0	0	0	0	0
LA	Louisiana 2	12	0	0	0	0	0	0
LA	Michoud	1	0	0	71	0	2	83
LA	Michoud	2	0	0	106	0	4	138
LA	Michoud	3	1	0	491	1	13	467
LA	Monroe	11	0	0	13	0	0	12
LA	Monroe	12	0	0	45	0	1	38
LA	Morgan City	4	0	0	5	0	0	5
LA	Natchitoches	10	0	0	0	0	0	0
LA	Ninemile Point	1	1	0	62	1	2	65
LA	Ninemile Point	2	1	0	112	1	3	103
LA	Ninemile Point	3	1	0	96	1	3	86
LA	Ninemile Point	4	3	0	691	3	18	611
LA	Ninemile Point	5	4	0	930	4	23	811
LA	Opelousas	10	0	0	1	0	0	1
LA	R S Nelson	3	0	0	39	0	1	26
LA	R S Nelson	4	0	0	123	0	8	279
LA	R S Nelson	6	541	7	19562	540	540	18701
LA	Rodemacher	1	86	1	3248	86	86	2975
LA	Rodemacher	2	527	7	18902	526	526	18212
LA	Ruston	2	0	0	4	0	0	6
LA	Ruston	3	0	0	5	0	1	22
LA	Sterlington	10	1	0	174	1	5	156
LA	Sterlington	7AB	0	0	72	0	2	72
LA	Teche	2	0	0	27	0	1	22
LA	Teche	3	0	0	446	0	11	368
LA	Waterford 1 & 2	1	124	1	4553	123	123	4269
LA	Waterford 1 & 2	2	96	1	3534	96	96	3313
LA	Willow Glen	1	0	0	99	0	3	87
LA	Willow Glen	2	0	0	26	0	1	20
LA	Willow Glen	3	0	0	93	0	1	32
LA	Willow Glen	4	0	0	291	0	9	295
LA	Willow Glen	5	1	0	458	1	13	437
ME	Graham Station	5	10	0	344	10	10	344
ME	Mason Steam	3	0	0	2	0	0	2
ME	Mason Steam	4	0	0	1	0	0	1
ME	Mason Steam	5	0	0	1	0	0	1

Table 2 - Phase II Allowance Allocations

State	Plant Name	Boiler1	Allowances for Years 2000-2009				Years 2010 and Beyond	
			(A) Auction Reserve Deduction	(B) Repower-ing Deduction	(C)2 Total Annual Phase II	(D) 1993-1998 Auction Deduction	(E) Auction Reserve Deduction	(F)3 Total Annual Phase II
ME	William F Wyman	1	14	0	1159	13	13	467
ME	William F Wyman	2	16	0	1161	16	16	549
ME	William F Wyman	3	78	1	2945	78	78	2693
ME	William F Wyman	4	182	2	6272	181	182	6284
MD	Brandon Shores	1	537	7	18503	535	536	18542
MD	Brandon Shores	2	226	2	7793	225	226	7808
MD	C P Crane	1	126	1	4348	126	126	4356
MD	C P Crane	2	117	1	4042	117	117	4049
MD	Chalk Point	**GT3	21	0	707	20	20	709
MD	Chalk Point	**GT4	21	0	707	20	20	709
MD	Chalk Point	**GT5	26	0	894	26	26	896
MD	Chalk Point	**GT6	26	0	894	26	26	896
MD	Chalk Point	1	267	3	9199	266	266	9218
MD	Chalk Point	2	296	3	10216	296	296	10236
MD	Chalk Point	3	151	2	12501	151	151	5229
MD	Chalk Point	4	75	1	2599	75	75	2605
MD	Dickerson	1	170	2	5846	169	169	5859
MD	Dickerson	2	160	2	5498	159	159	5510
MD	Dickerson	3	170	2	5844	169	169	5856
MD	Dickerson	CW1	0	0	0	0	0	0
MD	Dickerson	GT2	31	0	1082	31	31	1084
MD	Dickerson	GT3	31	0	1082	31	31	1084
MD	Dickerson	HCT3	0	0	0	0	0	0
MD	Dickerson	HCT4	0	0	0	0	0	0
MD	Easton 2	**25	0	0	0	0	0	0
MD	Easton 2	**26	0	0	0	0	0	0
MD	Easton 2	**27	0	0	0	0	0	0
MD	Gould Street	3	24	0	821	24	24	823
MD	Herbert A Wagner	1	37	0	1291	37	37	1293
MD	Herbert A Wagner	2	38	0	1299	38	38	1301
MD	Herbert A Wagner	3	243	3	8378	242	243	8395
MD	Herbert A Wagner	4	44	0	1520	44	44	1523
MD	Morgantown	1	491	5	16927	490	490	16962
MD	Morgantown	2	469	5	16184	468	469	16216
MD	Nanticoke	**ST1	0	0	0	0	0	0
MD	Perryman	**51	0	0	0	0	0	0
MD	Perryman	**52	0	0	0	0	0	0
MD	Perryman	**61	0	0	0	0	0	0
MD	Perryman	**62	0	0	0	0	0	0
MD	R P Smith	11	66	1	2313	66	66	2272
MD	R P Smith	9	8	0	634	8	8	281
MD	Riverside	1	5	0	189	5	5	190
MD	Riverside	2	5	0	171	5	5	172
MD	Riverside	3	10	0	354	10	10	354
MD	Riverside	4	13	0	455	13	13	456

Table 2 - Phase II Allowance Allocations

State	Plant Name	Boiler1	Allowances for Years 2000-2009				Years 2010 and Beyond	
			(A) Auction Reserve Deduction	(B) Repower-ing Deduction	(C)2 Total Annual Phase II	(D) 1993-1998 Auction Deduction	(E) Auction Reserve Deduction	(F)3 Total Annual Phase II
MD	Riverside	5	9	0	294	9	9	295
MD	Vienna	8	53	1	3644	53	53	1819
MD	Westport	3	5	0	186	5	5	187
MD	Westport	4	8	0	258	7	7	259
MA	Brayton Point	1	246	3	8478	245	246	8496
MA	Brayton Point	2	258	3	8908	258	258	8926
MA	Brayton Point	3	540	7	18618	539	539	18658
MA	Brayton Point	4	336	4	12135	336	336	11621
MA	Canal	1	357	4	13231	356	356	12327
MA	Canal	2	522	6	17993	521	521	18031
MA	Cannon Street	3	1†	0	374	11	11	374
MA	Cleary Flood	8	4	0	143	4	4	143
MA	Cleary Flood	9	46	0	2679	46	46	1577
MA	Kendall Square	1	5	0	199	5	5	198
MA	Kendall Square	2	6	0	208	5	5	208
MA	Kendall Square	3	12	0	421	12	12	422
MA	Mount Tom	1	163	2	5609	162	162	5622
MA	Mystic	4	76	1	2606	75	75	2612
MA	Mystic	5	90	1	3091	89	90	3098
MA	Mystic	6	89	1	3075	89	89	3081
MA	Mystic	7	500	5	17239	499	499	17274
MA	New Boston	1	179	2	6156	178	178	6169
MA	New Boston	2	183	2	6322	183	183	6335
MA	Salem Harbor	1	97	1	3338	97	97	3345
MA	Salem Harbor	2	99	1	3407	99	99	3414
MA	Salem Harbor	3	158	2	5459	158	158	5470
MA	Salem Harbor	4	357	4	12567	356	357	12346
MA	Somerset	1	0	0	0	0	0	0
MA	Somerset	2	0	0	0	0	0	0
MA	Somerset	3	0	0	0	0	0	0
MA	Somerset	4	0	0	0	0	0	0
MA	Somerset	5	0	0	0	0	0	0
MA	Somerset	6	0	0	0	0	0	0
MA	Somerset	7	80	1	2764	80	80	2770
MA	Somerset	8	116	1	3984	115	115	3993
MA	Waters River	**2	7	0	247	7	7	247
MA	West Springfield	1	11	0	378	11	11	379
MA	West Springfield	2	10	0	356	10	10	356
MA	West Springfield	3	87	1	3011	87	87	3017
MI	491 E. 48th Street	**7	9	0	298	9	9	299
MI	491 E. 48th Street	**8	9	0	298	9	9	299
MI	B C Cobb	1	13	0	1142	13	13	442
MI	B C Cobb	2	14	0	1229	13	14	475
MI	B C Cobb	3	13	0	1223	13	13	473
MI	B C Cobb	4	133	1	4572	132	132	4582

Table 2 - Phase II Allowance Allocations

State	Plant Name	Boiler1	Allowances for Years 2000-2009				Years 2010 and Beyond	
			(A) Auction Reserve Deduction	(B) Repower-ing Deduction	(C)2 Total Annual Phase II	(D) 1993-1998 Auction Deduction	(E) Auction Reserve Deduction	(F)3 Total Annual Phase II
MI	B C Cobb	5	136	1	4694	136	136	4702
MI	Belle River	1	537	6	18499	535	536	18536
MI	Belle River	2	544	6	18763	543	543	18801
MI	Conners Creek	15	17	0	4285	17	17	589
MI	Conners Creek	16	17	0	4279	17	17	581
MI	Conners Creek	17	15	0	4034	15	15	554
MI	Conners Creek	18	13	0	3353	13	13	450
MI	Dan E Karn	1	227	2	7809	226	226	7825
MI	Dan E Karn	2	248	3	8564	248	248	8582
MI	Dan E Karn	3	30	0	1020	30	30	1023
MI	Dan E Karn	4	27	0	948	27	27	949
MI	Delray	10	0	0	14	0	0	14
MI	Delray	12	0	0	14	0	0	12
MI	Delray	7	0	0	0	0	0	0
MI	Delray	8	0	0	12	0	0	12
MI	Delray	9	0	0	0	0	0	0
MI	Eckert Station	1	34	0	1298	34	34	1176
MI	Eckert Station	2	35	0	1354	35	35	1225
MI	Eckert Station	3	32	0	1327	32	32	1116
MI	Eckert Station	4	64	1	2222	64	64	2227
MI	Eckert Station	5	77	1	2665	77	77	2670
MI	Eckert Station	6	68	1	2342	68	68	2347
MI	Ednicott Generating	1	53	1	1809	52	52	1814
MI	Erickson	1	193	2	6644	192	192	6659
MI	Greenwood	1	16	0	539	16	16	541
MI	Harbor Beach	1	41	0	3520	41	41	1427
MI	J B Sims	3	43	0	1484	43	43	1487
MI	J C Weadock	7	138	1	4744	137	137	4754
MI	J C Weadock	8	136	1	4690	136	136	4699
MI	J H Campbell	1	235	3	8095	234	234	8113
MI	J H Campbell	2	281	3	9682	280	280	9702
MI	J H Campbell	3	798	10	27471	796	797	27529
MI	J R Whiting	1	99	1	3411	99	99	3418
MI	J R Whiting	2	101	1	3493	101	101	3500
MI	J R Whiting	3	130	1	4467	129	129	4477
MI	James De Young	5	30	0	1048	30	30	1050
MI	Marysville	10	13	0	1261	13	13	432
MI	Marysville	11	13	0	1315	13	13	450
MI	Marysville	12	11	0	1061	11	11	363
MI	Marysville	9	16	0	1637	16	16	560
MI	Mistersky	5	7	0	257	7	7	257
MI	Mistersky	6	13	0	437	13	13	438
MI	Mistersky	7	14	0	485	14	14	487
MI	Monroe (4)	1	692	9	23830	690	691	23882
MI	Monroe (4)	2	719	9	24731	716	717	24785

Table 2 - Phase II Allowance Allocations

State	Plant Name	Boiler1	Allowances for Years 2000-2009				Years 2010 and Beyond	
			(A) Auction Reserve Deduction	(B) Repower-ing Deduction	(C)2 Total Annual Phase II	(D) 1993-1998 Auction Deduction	(E) Auction Reserve Deduction	(F)3 Total Annual Phase II
MI	Monroe (4)	3	672	8	23151	670	672	23200
MI	Monroe (4)	4	739	9	25424	737	737	25478
MI	Presque Isle	2	7	0	637	7	7	246
MI	Presque Isle	3	55	1	1906	55	55	1910
MI	Presque Isle	4	48	1	1676	48	48	1673
MI	Presque Isle	5	85	1	2933	85	85	2938
MI	Presque Isle	6	85	1	2940	85	85	2946
MI	Presque Isle	7	63	1	2215	63	63	2173
MI	Presque Isle	8	59	1	2191	59	59	2050
MI	Presque Isle	9	44	0	2346	44	44	1511
MI	River Rouge	1	2	0	79	2	2	79
MI	River Rouge	2	180	2	6321	179	179	6203
MI	River Rouge	3	264	3	9100	263	264	9118
MI	Shiras	3	15	0	500	14	14	502
MI	St Clair	1	106	1	3665	106	106	3672
MI	St Clair	2	103	1	3542	103	103	3549
MI	St Clair	3	102	1	3524	102	102	3530
MI	St Clair	4	98	1	3395	98	98	3402
MI	St Clair	5	0	0	0	0	0	0
MI	St Clair	6	213	2	7340	212	213	7355
MI	St Clair	7	390	4	13455	389	390	13482
MI	Trenton Channel	16	67	0	3292	66	66	2297
MI	Trenton Channel	17	16	0	767	16	16	534
MI	Trenton Channel	18	72	0	3563	72	72	2485
MI	Trenton Channel	19	14	0	698	14	14	488
MI	Trenton Channel	9A	421	5	14502	420	420	14532
MI	Wyandotte	5	15	0	960	15	15	549
MI	Wyandotte	7	15	0	953	15	15	545
MN	Allen S King	1	453	5	15623	452	452	15655
MN	Black Dog	1	10	0	1914	10	10	331
MN	Black Dog	2	13	0	3683	13	13	458
MN	Black Dog	3	29	0	2275	29	29	989
MN	Black Dog	4	62	1	4055	62	62	2130
MN	Clay Boswell	1	36	0	1827	36	36	1248
MN	Clay Boswell	2	34	0	1800	34	34	1188
MN	Clay Boswell	3	286	3	9863	285	286	9882
MN	Clay Boswell	4	299	3	10321	299	299	10342
MN	Fox Lake	3	31	0	2069	31	31	1068
MN	High Bridge	3	23	0	2118	23	23	795
MN	High Bridge	4	18	0	1458	18	18	614
MN	High Bridge	5	31	0	2194	31	31	1087
MN	High Bridge	6	54	1	1851	54	54	1855
MN	Hoot Lake	2	9	0	1242	9	9	310
MN	Hoot Lake	3	31	0	1978	31	31	1078
MN	M L Hibbard	3	1	0	987	1	1	30

Table 2 - Phase II Allowance Allocations

State	Plant Name	Boiler1	Allowances for Years 2000-2009				Years 2010 and Beyond	
			(A) Auction Reserve Deduction	(B) Repower-ing Deduction	(C)2 Total Annual Phase II	(D) 1993-1998 Auction Deduction	(E) Auction Reserve Deduction	(F)3 Total Annual Phase II
MN	M L Hibbard	4	0	0	1094	0	0	10
MN	Minnesota Valley	4	2	0	938	2	2	62
MN	Northeast Station	NEPP	31	0	1052	30	30	1055
MN	Riverside	6	7	0	3076	7	7	227
MN	Riverside	7	3	0	1339	3	3	90
MN	Riverside	8	109	1	5067	109	109	3779
MN	Sherburne County	1	380	4	13087	379	379	13115
MN	Sherburne County	2	382	4	13180	381	382	13206
MN	Sherburne County	3	376	4	12952	375	375	12979
MN	Silver Lake	4	91	1	3132	91	91	3138
MN	Syl Laskin	1	9	0	1692	9	9	321
MN	Syl Laskin	2	4	0	1649	4	4	139
MS	Baxter Wilson	1	1	0	360	1	9	321
MS	Baxter Wilson	2	103	1	3563	103	103	3570
MS	Delta	1	0	0	26	0	1	24
MS	Delta	2	1	0	50	1	1	48
MS	Gerald Andrus	1	95	1	3281	95	95	3287
MS	Jack Watson	1	5	0	172	5	5	173
MS	Jack Watson	2	5	0	180	5	5	181
MS	Jack Watson	3	8	0	273	8	8	273
MS	Jack Watson	4	218	2	7523	218	218	7537
MS	Jack Watson	5	447	5	15410	446	446	15442
MS	Moselle	**4	0	0	0	0	0	0
MS	Moselle	**5	0	0	0	0	0	0
MS	Moselle	**6	0	0	0	0	0	0
MS	Moselle	**7	0	0	0	0	0	0
MS	Moselle	1	0	0	35	0	1	33
MS	Moselle	2	1	0	76	1	2	70
MS	Moselle	3	0	0	42	0	1	38
MS	Natchez	1	0	0	2	0	0	3
MS	R D Morrow	1	139	2	4798	139	139	4808
MS	R D Morrow	2	152	2	5252	152	152	5263
MS	Rex Brown	1A	0	0	6	0	0	5
MS	Rex Brown	1B	0	0	6	0	0	5
MS	Rex Brown	3	0	0	41	0	1	37
MS	Rex Brown	4	0	0	159	0	4	139
MS	Sweatt	1	2	0	78	2	2	78
MS	Sweatt	2	3	0	86	2	2	86
MS	Victor J Daniel Jr	1	287	3	11225	286	287	9916
MS	Victor J Daniel Jr	2	414	4	14273	413	413	14303
MO	Asbury	1	197	2	6973	196	197	6986
MO	Blue Valley	3	135	1	4669	135	135	4678
MO	Chamois	2	158	2	5455	158	158	5466
MO	Columbia	6	26	0	903	26	26	905
MO	Columbia	7	105	1	3630	104	104	3639

Table 2 - Phase II Allowance Allocations

State	Plant Name	Boiler1	Allowances for Years 2000-2009				Years 2010 and Beyond	
			(A) Auction Reserve Deduction	(B) Repower-ing Deduction	(C)2 Total Annual Phase II	(D) 1993-1998 Auction Deduction	(E) Auction Reserve Deduction	(F)3 Total Annual Phase II
MO	Columbia	8	3	0	125	3	3	125
MO	Combustion Turbine 1	**1	0	0	0	0	0	0
MO	Combustion Turbine 1	**NA4	0	0	0	0	0	0
MO	Combustion Turbine 1	**NA5	0	0	0	0	0	0
MO	Combustion Turbine 1	**NA6	0	0	0	0	0	0
MO	Combustion Turbine 2	**2	0	0	0	0	0	0
MO	Combustion Turbine 3	**3	0	0	0	0	0	0
MO	Hawthorn	5	356	4	12769	355	356	12309
MO	Iatan	**2	0	0	0	0	0	0
MO	Iatan	1	470	5	16203	469	469	16236
MO	James River	**GT2	18	0	604	18	18	605
MO	James River	3	96	1	3326	96	20	681
MO	James River	4	173	2	5973	173	36	1253
MO	James River	5	60	1	2132	60	60	2136
MO	Jim Hill	**1	0	0	0	0	0	0
MO	Labadie	1	496	5	17548	495	495	17583
MO	Labadie	2	462	5	16358	461	461	16391
MO	Labadie	3	494	5	17482	493	493	17516
MO	Labadie	4	440	5	15579	439	439	15611
MO	Lake Road	6	18	0	605	18	18	606
MO	Meramec	1	30	0	2745	30	30	1029
MO	Meramec	2	32	0	2778	32	32	1105
MO	Meramec	3	68	1	6057	68	68	2362
MO	Meramec	4	74	1	7174	74	74	2554
MO	Montrose	1	90	1	3188	90	90	3194
MO	Montrose	2	100	1	3534	100	100	3541
MO	Montrose	3	123	1	4348	123	123	4356
MO	NA1 – 7223	**1	0	0	0	0	0	0
MO	NA 1 – 7223	**2	0	0	0	0	0	0
MO	NA 1 – 7223	**3	0	0	0	0	0	0
MO	NA 1 – 7226	**1	0	0	0	0	0	0
MO	New Madrid	1	344	4	12174	343	343	12198
MO	New Madrid	2	396	4	14005	395	395	14033
MO	RG 1 & 2	**1	0	0	0	0	0	0
MO	RG 1 & 2	**2	0	0	0	0	0	0
MO	Rush Island	1	402	4	14956	401	402	13900
MO	Rush Island	2	449	5	15647	448	449	15518
MO	Sibley	1	15	0	519	15	15	520
MO	Sibley	2	18	0	638	18	18	639
MO	Sibley	3	216	2	7632	215	215	7648
MO	Sikeston	1	197	2	6789	196	197	6802
MO	Sioux	1	306	3	10820	305	305	10842
MO	Sioux	2	268	3	9489	267	268	9507
MO	Southwest	1	119	1	4183	119	119	4127
MO	Thomas Hill	MB1	125	1	4420	125	125	4429

Table 2 - Phase II Allowance Allocations

State	Plant Name	Boiler1	Allowances for Years 2000-2009				Years 2010 and Beyond	
			(A) Auction Reserve Deduction	(B) Repower-ing Deduction	(C)2 Total Annual Phase II	(D) 1993-1998 Auction Deduction	(E) Auction Reserve Deduction	(F)3 Total Annual Phase II
MO	Thomas Hill	MB2	210	2	7430	209	210	7444
MO	Thomas Hill	MB3	529	6	18251	528	529	18288
MT	Colstrip	1	213	2	7857	213	213	7372
MT	Colstrip	2	213	2	7868	212	212	7349
MT	Colstrip	3	106	1	4404	106	106	3678
MT	Colstrip	4	85	1	2916	84	84	2923
MT	Frank Bird	1	0	0	0	0	0	0
MT	J E Corette	2	141	2	5060	141	141	4884
MT	Lewis & Clark	B1	41	0	1444	41	41	1403
NE	Bluffs	4	1	0	18	1	1	18
NE	C W Burdick	B-3	0	0	0	0	0	0
NE	Canaday	1	18	0	627	18	18	628
NE	Gerald Gentleman	1	259	3	10802	259	259	8960
NE	Gerald Gentleman	2	510	6	17566	508	509	17603
NE	Gerald T Whelan	1	68	1	2334	68	68	2338
NE	Harold Kramer	1	0	0	38	0	0	3
NE	Harold Kramer	2	0	0	40	0	0	3
NE	Harold Kramer	3	5	0	1052	5	5	168
NE	Harold Kramer	4	6	0	2079	6	6	198
NE	Lon Wright	8	34	0	2044	34	34	1184
NE	NA 1 -- 7019	**NA1	0	0	0	0	0	0
NE	Nebraska City	1	383	4	13190	382	382	13217
NE	North Omaha	1	30	0	2388	30	30	1045
NE	North Omaha	2	47	1	3286	47	47	1614
NE	North Omaha	3	55	1	3207	55	55	1900
NE	North Omaha	4	73	1	3848	73	73	2515
NE	North Omaha	5	88	1	4646	88	88	3043
NE	Platte	1	85	1	2926	85	85	2932
NE	Sheldon	1	23	0	2168	23	23	792
NE	Sheldon	2	24	0	2280	24	24	846
NV	Clark	1	0	0	20	0	1	22
NV	Clark	2	8	0	273	8	8	261
NV	Clark	3	0	0	18	0	0	16
NV	Fort Churchill	1	10	0	371	10	10	356
NV	Fort Churchill	2	16	0	577	16	16	544
NV	Harry Allen	**1	0	0	0	0	0	0
NV	Harry Allen	**2	0	0	0	0	0	0
NV	Harry Allen	**3	0	0	0	0	0	0
NV	Harry Allen	**4	0	0	0	0	0	0
NV	Harry Allen	**GT1	0	0	0	0	0	0
NV	Harry Allen	**GT2	0	0	0	0	0	0
NV	Harry Allen	**GT3	0	0	0	0	0	0
NV	Harry Allen	**GT4	0	0	0	0	0	0
NV	Mohave	1	759	9	26651	757	757	26165
NV	Mohave	2	756	9	26547	753	754	26059

Table 2 - Phase II Allowance Allocations

State	Plant Name	Boiler1	Allowances for Years 2000-2009				Years 2010 and Beyond	
			(A) Auction Reserve Deduction	(B) Repower-ing Deduction	(C)2 Total Annual Phase II	(D) 1993-1998 Auction Deduction	(E) Auction Reserve Deduction	(F)3 Total Annual Phase II
NV	North Valmy	1	190	2	6958	190	190	6569
NV	North Valmy	2	115	1	4261	115	115	3966
NV	Reid Gardner	1	57	1	2172	57	57	1985
NV	Reid Gardner	2	59	1	2201	59	59	2025
NV	Reid Gardner	3	57	1	2124	57	57	1968
NV	Reid Gardner	4	68	1	2813	68	68	2342
NV	Sunrise	1	1	0	50	1	2	52
NV	Tracy	1	0	0	15	0	0	14
NV	Tracy	2	1	0	46	1	1	42
NV	Tracy	3	9	0	314	9	9	304
NH	Merrimack	1	124	1	4287	124	124	4296
NH	Merrimack	2	268	3	9239	267	268	9257
NH	Newington	1	307	3	11660	306	307	10613
NH	Schiller	4	42	0	1514	42	42	1440
NH	Schiller	5	38	0	1457	38	38	1298
NH	Schiller	6	48	1	1642	48	48	1646
NJ	B L England	1	111	1	3810	110	110	3818
NJ	B L England	2	143	2	4929	143	143	4939
NJ	B L England	3	70	1	2419	70	70	2424
NJ	Bergen	1	57	1	1977	57	57	1981
NJ	Bergen	2	59	1	2043	59	59	2047
NJ	Burlington	7	16	0	561	16	16	562
NJ	Deepwater	1	34	0	1164	34	34	1166
NJ	Deepwater	3	0	0	11	0	0	11
NJ	Deepwater	4	2	0	59	2	2	58
NJ	Deepwater	5	0	0	5	0	0	5
NJ	Deepwater	6	2	0	59	2	2	58
NJ	Deepwater	8	80	1	2743	79	79	2751
NJ	Deepwater	9	53	1	1813	52	53	1817
NJ	Gilbert	01	2	0	60	2	2	60
NJ	Gilbert	02	2	0	37	2	2	37
NJ	Gilbert	03	20	0	700	20	20	701
NJ	Gilbert	04	17	0	600	17	17	601
NJ	Gilbert	05	17	0	596	17	17	597
NJ	Gilbert	06	17	0	593	17	17	594
NJ	Gilbert	07	18	0	605	18	18	606
NJ	Hudson	1	35	0	1197	35	35	1199
NJ	Hudson	2	440	5	15967	439	440	15209
NJ	Kearny	7	4	0	145	4	4	146
NJ	Kearny	8	4	0	153	4	4	154
NJ	Linden	11	28	0	968	28	28	970
NJ	Linden	12	19	0	665	19	19	666
NJ	Linden	13	25	0	877	25	25	879
NJ	Linden	2	19	0	644	19	19	645
NJ	Linden	4	12	0	423	12	12	423

Table 2 - Phase II Allowance Allocations								
			Allowances for Years 2000-2009				Years 2010 and Beyond	
State	Plant Name	Boiler1	(A) Auction Reserve Deduction	(B) Repower-ing Deduction	(C)2 Total Annual Phase II	(D) 1993-1998 Auction Deduction	(E) Auction Reserve Deduction	(F)3 Total Annual Phase II
NJ	Mercer	1	221	2	7681	220	220	7616
NJ	Mercer	2	203	2	7437	202	203	7006
NJ	Sayreville	02	0	0	2	0	0	2
NJ	Sayreville	03	0	0	2	0	0	2
NJ	Sayreville	05	0	0	41	0	0	41
NJ	Sayreville	06	0	0	39	0	0	39
NJ	Sayreville	07	22	0	766	22	22	767
NJ	Sayreville	08	26	0	892	26	26	893
NJ	Sewaren	1	3	0	117	3	3	117
NJ	Sewaren	2	10	0	340	10	10	341
NJ	Sewaren	3	7	0	254	7	7	255
NJ	Sewaren	4	17	0	574	17	17	575
NJ	Sewaren	5	0	0	0	0	0	0
NJ	Werner	04	6	0	194	6	6	195
NM	Cunningham	121B	0	0	42	0	1	44
NM	Cunningham	122B	0	0	269	0	6	203
NM	Escalante	1	42	0	1874	42	42	1466
NM	Four Corners	1	96	1	3592	96	96	3323
NM	Four Corners	2	96	1	3588	96	96	3323
NM	Four Corners	3	120	1	4477	120	120	4162
NM	Four Corners	4	344	4	12503	343	343	11881
NM	Four Corners	5	356	4	13271	355	356	12305
NM	Maddox	051B	0	0	170	0	4	122
NM	North Lovington	S2	0	0	0	0	0	0
NM	Person	3	0	0	0	0	0	0
NM	Person	4	0	0	0	0	0	0
NM	Reeves	1	0	0	4	0	0	6
NM	Reeves	2	0	0	7	0	0	5
NM	Reeves	3	3	0	104	3	3	101
NM	Rio Grande	6	0	0	3	0	0	5
NM	Rio Grande	7	0	0	1	0	0	1
NM	Rio Grande	8	0	0	80	0	2	62
NM	San Juan	1	214	2	7939	213	213	7384
NM	San Juan	2	157	2	5920	156	156	5410
NM	San Juan	3	376	4	13874	375	376	13002
NM	San Juan	4	353	4	13043	352	353	12200
NY	59TH Street	110	2	0	64	2	2	64
NY	74TH Street	120	13	0	447	13	13	448
NY	74TH Street	121	13	0	449	13	13	450
NY	74TH Street	122	13	0	447	13	13	448
NY	Albany	1	52	1	1800	52	52	1803
NY	Albany	2	45	0	1556	45	45	1558
NY	Albany	3	46	1	1592	46	46	1597
NY	Albany	4	49	1	1686	49	49	1690
NY	Arthur Kill	20	43	0	1478	43	43	1480

Table 2 - Phase II Allowance Allocations

State	Plant Name	Boiler1	Allowances for Years 2000-2009				Years 2010 and Beyond	
			(A) Auction Reserve Deduction	(B) Repower-ing Deduction	(C)2 Total Annual Phase II	(D) 1993-1998 Auction Deduction	(E) Auction Reserve Deduction	(F)3 Total Annual Phase II
NY	Arthur Kill	30	69	1	2366	68	69	2371
NY	Astoria	10	35	0	1216	35	35	1218
NY	Astoria	20	45	0	1554	45	45	1556
NY	Astoria	30	88	1	3023	87	88	3029
NY	Astoria	40	69	1	2375	69	69	2380
NY	Astoria	50	78	1	2699	78	78	2705
NY	Bowline Point	1	123	1	4239	123	123	4247
NY	Bowline Point	2	123	1	4240	123	123	4248
NY	C R Huntley	63	71	1	2656	71	71	2465
NY	C R Huntley	64	76	1	2663	76	76	2624
NY	C R Huntley	65	78	1	2692	78	78	2697
NY	C R Huntley	66	79	1	2728	79	79	2733
NY	C R Huntley	67	168	2	5773	167	167	5785
NY	C R Huntley	68	156	2	5379	156	156	5390
NY	Charles Poletti	001	187	2	6436	186	186	6450
NY	Danskammer	1	28	0	948	27	27	950
NY	Danskammer	2	27	0	920	27	27	921
NY	Danskammer	3	91	1	3128	91	91	3134
NY	Danskammer	4	175	2	6028	174	175	6041
NY	Dunkirk	1	82	1	2842	82	82	2848
NY	Dunkirk	2	94	1	3228	93	93	3235
NY	Dunkirk	3	153	2	5290	153	153	5300
NY	Dunkirk	4	171	2	5904	171	171	5916
NY	E F Barrett	10	69	1	2371	69	69	2375
NY	E F Barrett	20	68	1	2336	68	68	2341
NY	East River	50	41	0	1396	40	40	1400
NY	East River	60	41	0	1430	41	41	1432
NY	East River	70	30	0	1033	30	30	1035
NY	Far Rockaway	40	14	0	469	14	14	470
NY	Glenwood	40	27	0	939	27	27	940
NY	Glenwood	50	26	0	903	26	26	905
NY	Goudey	11	23	0	792	23	23	793
NY	Goudey	12	23	0	780	23	23	782
NY	Goudey	13	95	1	3287	95	95	3293
NY	Greenidge	4	28	0	982	28	28	983
NY	Greenidge	5	28	0	980	28	28	981
NY	Greenidge	6	92	1	3184	92	92	3190
NY	Hickling	1	21	0	725	20	20	709
NY	Hickling	2	21	0	725	20	20	709
NY	Hickling	3	25	0	895	25	25	849
NY	Hickling	4	26	0	933	26	26	885
NY	Jennison	1	17	0	650	17	17	600
NY	Jennison	2	18	0	676	18	18	624
NY	Jennison	3	18	0	724	18	18	626
NY	Jennison	4	18	0	724	18	18	626

Table 2 - Phase II Allowance Allocations

State	Plant Name	Boiler1	Allowances for Years 2000-2009				Years 2010 and Beyond	
			(A) Auction Reserve Deduction	(B) Repower-ing Deduction	(C)2 Total Annual Phase II	(D) 1993-1998 Auction Deduction	(E) Auction Reserve Deduction	(F)3 Total Annual Phase II
NY	Kintigh	1	403	4	13885	402	402	13913
NY	Lovett	3	7	0	225	7	7	226
NY	Lovett	4	133	1	4568	132	132	4578
NY	Lovett	5	145	2	4986	144	144	4997
NY	Milliken	1	143	2	4926	143	143	4936
NY	Milliken	2	151	2	5213	151	151	5224
NY	Northport	1	241	3	8320	241	241	8337
NY	Northport	2	294	3	10127	293	293	10147
NY	Northport	3	323	4	11118	322	322	11142
NY	Northport	4	168	2	5792	168	168	5803
NY	Oswego	1	0	0	0	0	0	0
NY	Oswego	2	0	0	0	0	0	0
NY	Oswego	3	3	0	90	3	3	90
NY	Oswego	4	12	0	398	12	12	398
NY	Oswego	5	241	3	17239	240	241	8327
NY	Oswego	6	139	2	4806	139	139	4816
NY	Port Jefferson	1	14	0	475	14	14	476
NY	Port Jefferson	2	14	0	498	14	14	499
NY	Port Jefferson	3	128	1	4396	127	127	4405
NY	Port Jefferson	4	150	2	5179	150	150	5190
NY	Ravenswood	10	92	1	3164	92	92	3170
NY	Ravenswood	20	78	1	2677	77	78	2682
NY	Ravenswood	30	145	2	4990	144	145	5000
NY	Rochester 3	12	66	1	2268	66	66	2273
NY	Rochester 3	3	0	0	2	0	0	2
NY	Rochester 3	7	2	0	201	2	2	62
NY	Rochester 3	8	0	0	0	0	0	0
NY	Rochester 7	1	32	0	1093	32	32	1095
NY	Rochester 7	2	47	1	1625	47	47	1629
NY	Rochester 7	3	46	0	1586	46	46	1589
NY	Rochester 7	4	64	1	2212	64	64	2217
NY	Roseton	1	421	5	15579	420	420	14532
NY	Roseton	2	375	4	14908	374	375	12962
NY	S A Carlson	10	19	0	673	19	19	674
NY	S A Carlson	11	13	0	424	19	13	426
NY	S A Carlson	12	37	0	1276	13	37	1278
NY	S A Carlson	9	19	0	664	36	19	666
NY	Waterside	41	7	0	252	7	7	253
NY	Waterside	42	7	0	247	7	7	248
NY	Waterside	51	13	0	416	13	13	416
NY	Waterside	52	13	0	417	12	12	418
NY	Waterside	61	12	0	431	12	12	431
NY	Waterside	62	14	0	507	14	14	507
NY	Waterside	80	33	0	1128	33	33	1129
NY	Waterside	90	35	0	1234	35	35	1236

Table 2 - Phase II Allowance Allocations

State	Plant Name	Boiler1	Allowances for Years 2000-2009				Years 2010 and Beyond	
			(A) Auction Reserve Deduction	(B) Repower-ing Deduction	(C)2 Total Annual Phase II	(D) 1993-1998 Auction Deduction	(E) Auction Reserve Deduction	(F)3 Total Annual Phase II
NC	Asheville	1	192	2	6620	192	192	6633
NC	Asheville	2	153	2	5259	152	152	5271
NC	Belews Creek	1	898	11	30900	895	896	30966
NC	Belews Creek	2	945	11	32549	943	944	32616
NC	Buck	5	0	0	1031	0	0	2
NC	Buck	6	0	0	589	0	0	1
NC	Buck	7	10	0	1058	10	10	344
NC	Buck	8	17	0	2322	17	17	602
NC	Buck	9	53	1	2870	53	53	1818
NC	Cape Fear	3	0	0	599	0	0	0
NC	Cape Fear	4	0	0	599	0	0	0
NC	Cape Fear	5	84	1	3381	84	84	2895
NC	Cape Fear	6	86	1	3912	86	86	2961
NC	Cliffside	1	0	0	898	0	0	1
NC	Cliffside	2	0	0	872	0	0	1
NC	Cliffside	3	1	0	1291	1	1	21
NC	Cliffside	4	1	0	1305	1	1	17
NC	Cliffside	5	343	4	14036	342	343	11861
NC	Dan River	1	11	0	1909	11	11	363
NC	Dan River	2	10	0	2779	10	10	334
NC	Dan River	3	17	0	2792	17	17	597
NC	G G Allen	1	1	0	2427	1	1	31
NC	G G Allen	2	1	0	2813	1	1	34
NC	G G Allen	3	130	1	6120	130	130	4491
NC	G G Allen	4	93	1	5743	93	93	3207
NC	G G Allen	5	113	1	5970	112	112	3886
NC	L V Sutton	1	21	0	2051	21	21	722
NC	L V Sutton	2	35	0	2270	34	34	1193
NC	L V Sutton	3	148	2	8296	148	148	5111
NC	Lee	1	19	0	1636	19	19	649
NC	Lee	2	24	0	1685	24	24	831
NC	Lee	3	141	2	5762	140	140	4855
NC	Marshall	1	209	2	8763	208	208	7211
NC	Marshall	2	236	3	9262	235	235	8146
NC	Marshall	3	432	5	15859	431	431	14914
NC	Marshall	4	387	4	15132	386	387	13373
NC	Mayo	1A	371	4	12781	370	370	12807
NC	Mayo	1B	371	4	12781	370	370	12807
NC	Riverbend	10	34	0	2626	39	34	1174
NC	Riverbend	7	39	0	2152	36	39	1349
NC	Riverbend	8	36	0	2113	10	36	1245
NC	Riverbend	9	10	0	2267	34	10	356
NC	Roxboro	1	322	3	11085	321	321	11108
NC	Roxboro	2	570	6	19636	568	569	19676
NC	Roxboro	3A	258	3	9093	257	257	8902

Table 2 - Phase II Allowance Allocations

State	Plant Name	Boiler1	Allowances for Years 2000-2009				Years 2010 and Beyond	
			(A) Auction Reserve Deduction	(B) Repower-ing Deduction	(C)2 Total Annual Phase II	(D) 1993-1998 Auction Deduction	(E) Auction Reserve Deduction	(F)3 Total Annual Phase II
NC	Roxboro	3B	258	3	9093	257	257	8902
NC	Roxboro	4A	302	3	10404	301	301	10425
NC	Roxboro	4B	302	3	10404	301	301	10425
NC	W H Weatherspoon	1	14	0	1122	13	14	467
NC	W H Weatherspoon	2	14	0	1125	14	14	473
NC	W H Weatherspoon	3	27	0	1626	27	27	937
ND	Antelope Valley	B1	346	4	11943	346	346	11968
ND	Antelope Valley	B2	323	4	11127	322	322	11151
ND	Coal Creek	1	676	8	23302	674	676	23350
ND	Coal Creek	2	615	8	21179	613	613	21226
ND	Coyote	B1	469	5	16177	468	468	16210
ND	Leland Olds	1	264	3	9102	263	264	9120
ND	Leland Olds	2	767	9	26392	765	765	26448
ND	Milton R Young	B1	376	4	12947	375	375	12973
ND	Milton R Young	B2	461	5	15880	459	460	15913
ND	R M Heskett	B2	93	1	3201	93	93	3207
ND	Stanton	1	216	2	7445	215	216	7460
ND	Stanton	10	39	0	1334	39	39	1337
OH	Acme	11	0	0	7	0	0	7
OH	Acme	13	0	0	1846	0	0	9
OH	Acme	14	0	0	2519	0	0	14
OH	Acme	15	0	0	3365	0	0	19
OH	Acme	16	59	1	2420	59	59	2030
OH	Acme	9	0	0	1	0	0	1
OH	Acme	91	23	0	2012	22	23	778
OH	Acme	92	20	0	1800	20	20	696
OH	Ashtabula	10	53	0	1795	52	52	1801
OH	Ashtabula	11	54	0	1890	54	54	1894
OH	Ashtabula	7	204	2	7218	203	204	7231
OH	Ashtabula	8	67	0	2337	67	67	2340
OH	Ashtabula	9	58	0	1990	58	58	1995
OH	Avon Lake	10	65	1	2253	65	65	2258
OH	Avon Lake	11	142	2	5023	142	142	5034
OH	Avon Lake	12	429	5	15194	428	429	15225
OH	Avon Lake	9	74	1	2566	74	74	2572
OH	Bay Shore	1	137	1	4718	136	137	4726
OH	Bay Shore	2	130	1	4494	130	130	4503
OH	Bay Shore	3	124	1	4276	124	124	4284
OH	Bay Shore	4	204	2	7036	204	204	7050
OH	Cardinal	1	418	5	14773	416	417	14803
OH	Cardinal	2	467	5	16521	466	466	16554
OH	Cardinal	3	485	5	17296	484	484	16747
OH	Cardinal/Tidd	**1	21	0	714	21	21	715
OH	Conesville	1	51	1	1813	51	51	1817
OH	Conesville	2	60	1	2109	59	60	2114

Table 2 - Phase II Allowance Allocations

State	Plant Name	Boiler1	Allowances for Years 2000-2009				Years 2010 and Beyond	
			(A) Auction Reserve Deduction	(B) Repower-ing Deduction	(C)2 Total Annual Phase II	(D) 1993-1998 Auction Deduction	(E) Auction Reserve Deduction	(F)3 Total Annual Phase II
OH	Conesville	3	67	1	2369	67	67	2373
OH	Conesville	4	594	6	21025	593	593	21067
OH	Conesville	5	208	2	9023	207	208	7179
OH	Conesville	6	230	2	9392	230	230	7951
OH	Dover	**6	4	0	153	4	4	154
OH	Eastlake	1	95	1	3365	95	95	3371
OH	Eastlake	2	105	1	3724	105	105	3732
OH	Eastlake	3	122	1	4318	122	122	4327
OH	Eastlake	4	177	2	6256	176	176	6269
OH	Eastlake	5	469	5	16600	468	468	16633
OH	Edgewater	11	25	0	878	25	12	422
OH	Edgewater	12	27	0	947	27	13	455
OH	Edgewater	13	62	1	2178	61	61	2183
OH	Gen J M Gavin	1	964	11	34088	962	963	34158
OH	Gen J M Gavin	2	982	12	34726	980	981	34797
OH	Gorge	25	43	0	1498	43	21	720
OH	Gorge	26	49	1	1676	49	23	807
OH	Hamilton	9	34	0	1665	34	34	1162
OH	J M Stuart	1	569	6	19626	568	568	19666
OH	J M Stuart	2	540	6	18605	538	539	18643
OH	J M Stuart	3	535	6	18448	534	534	18486
OH	J M Stuart	4	566	6	19497	564	565	19537
OH	Killen Station	2	491	5	16923	490	490	16958
OH	Kyger Creek	1	235	3	8097	234	235	8114
OH	Kyger Creek	2	226	2	7795	226	226	7810
OH	Kyger Creek	3	218	2	7522	218	218	7536
OH	Kyger Creek	4	228	2	7858	227	228	7873
OH	Kyger Creek	5	228	2	7872	228	228	7887
OH	Lake Road	6	0	0	1340	0	0	0
OH	Lake Shore	18	145	2	6031	145	145	5014
OH	Lake Shore	91	1	0	47	1	1	47
OH	Lake Shore	92	2	0	84	2	2	84
OH	Lake Shore	93	2	0	65	2	2	65
OH	Lake Shore	94	3	0	107	3	3	107
OH	Miami Fort	5-1	4	0	144	4	4	143
OH	Miami Fort	5-2	4	0	144	4	4	143
OH	Miami Fort	6	139	2	4906	138	138	4917
OH	Miami Fort	7	469	5	16602	468	468	16635
OH	Miami Fort	8	529	6	18227	527	528	18264
OH	Muskingum River	1	181	2	6412	181	181	6425
OH	Muskingum River	2	173	2	6106	172	172	6119
OH	Muskingum River	3	170	2	6016	170	170	6027
OH	Muskingum River	4	143	2	5078	143	143	5088
OH	Muskingum River	5	493	5	17445	492	492	17479
OH	Niles	1	85	1	2994	84	84	3000

Table 2 - Phase II Allowance Allocations

State	Plant Name	Boiler1	Allowances for Years 2000-2009				Years 2010 and Beyond	
			(A) Auction Reserve Deduction	(B) Repower-ing Deduction	(C)2 Total Annual Phase II	(D) 1993-1998 Auction Deduction	(E) Auction Reserve Deduction	(F)3 Total Annual Phase II
OH	Niles	2	111	1	3923	111	111	3930
OH	O H Hutchings	H-1	11	0	1736	11	11	398
OH	O H Hutchings	H-2	9	0	1671	9	9	309
OH	O H Hutchings	H-3	17	0	1603	17	17	585
OH	O H Hutchings	H-4	19	0	1623	19	19	641
OH	O H Hutchings	H-5	15	0	1630	15	15	514
OH	O H Hutchings	H-6	11	0	1660	11	11	371
OH	Picway	9	60	1	2127	60	60	2131
OH	Poston	1	23	0	787	23	23	789
OH	Poston	2	21	0	731	21	21	733
OH	Poston	3	28	0	957	28	28	958
OH	R E Burger	1	36	0	1233	36	17	593
OH	R E Burger	2	35	0	1206	35	17	579
OH	R E Burger	3	36	0	1246	36	17	599
OH	R E Burger	4	37	0	1275	37	18	613
OH	R E Burger	5	38	0	1327	37	37	1331
OH	R E Burger	6	37	0	1325	37	37	1327
OH	R E Burger	7	131	1	4647	131	131	4656
OH	R E Burger	8	151	2	5359	151	151	5370
OH	Refuse & Coal	001	12	0	426	12	12	426
OH	Refuse & Coal	002	12	0	381	12	12	381
OH	Refuse & Coal	003	12	0	402	12	12	402
OH	Refuse & Coal	004	12	0	438	12	12	441
OH	Refuse & Coal	005	12	0	375	12	12	375
OH	Refuse & Coal	006	12	0	366	12	12	363
OH	Richard H Gorsuch	1	178	2	6150	178	178	6162
OH	Richard H Gorsuch	2	146	2	5062	146	146	5072
OH	Richard H Gorsuch	3	200	2	6878	198	200	6892
OH	Richard H Gorsuch	4	40	0	1404	40	40	1404
OH	Toronto	10	97	0	3343	97	47	1608
OH	Toronto	11	105	0	3612	105	49	1738
OH	Toronto	9	54	0	1873	54	26	900
OH	W H Sammis	1	181	2	6237	180	181	6250
OH	W H Sammis	2	159	2	5470	158	158	5482
OH	W H Sammis	3	181	2	6236	180	181	6249
OH	W H Sammis	4	160	2	5527	160	160	5538
OH	W H Sammis	5	294	3	10419	294	294	10439
OH	W H Sammis	6	564	6	19947	562	563	19987
OH	W H Sammis	7	527	6	18633	525	526	18670
OH	W H Zimmer	1	468	5	16149	467	468	16181
OH	Walter C Beckjord	1	14	0	1834	14	14	472
OH	Walter C Beckjord	2	21	0	1859	21	21	711
OH	Walter C Beckjord	3	31	0	2530	31	31	1077
OH	Walter C Beckjord	4	62	1	3261	62	62	2141
OH	Walter C Beckjord	5	109	1	3857	109	109	3864

Table 2 - Phase II Allowance Allocations

State	Plant Name	Boiler1	Allowances for Years 2000-2009				Years 2010 and Beyond	
			(A) Auction Reserve Deduction	(B) Repower-ing Deduction	(C)2 Total Annual Phase II	(D) 1993-1998 Auction Deduction	(E) Auction Reserve Deduction	(F)3 Total Annual Phase II
OH	Walter C Beckjord	6	280	3	9922	280	280	9942
OH	Woodsdale	**GT1	9	0	294	9	9	295
OH	Woodsdale	**GT10	0	0	0	0	0	0
OH	Woodsdale	**GT11	0	0	0	0	0	0
OH	Woodsdale	**GT12	0	0	0	0	0	0
OH	Woodsdale	**GT2	9	0	294	9	9	295
OH	Woodsdale	**GT3	9	0	294	9	9	295
OH	Woodsdale	**GT4	9	0	294	9	9	295
OH	Woodsdale	**GT5	9	0	294	9	9	295
OH	Woodsdale	**GT6	9	0	294	9	9	295
OH	Woodsdale	**GT7	0	0	0	0	0	0
OH	Woodsdale	**GT8	0	0	0	0	0	0
OH	Woodsdale	**GT9	0	0	0	0	0	0
OK	Anadarko	3	0	0	0	0	0	1
OK	Arbuckle	ARB	0	0	45	0	1	50
OK	Comanche	7251	0	0	333	0	4	144
OK	Comanche	7252	0	0	2	0	4	144
OK	Conoco	**1	6	0	222	6	6	222
OK	Conoco	**2	6	0	222	6	6	222
OK	GRDA	1	405	4	14638	403	404	13973
OK	GRDA	2	242	3	8393	242	242	8372
OK	Horseshoe Lake	6	0	0	173	0	5	160
OK	Horseshoe Lake	7	0	0	231	0	6	207
OK	Horseshoe Lake	8	0	0	313	0	10	358
OK	Hugo	1	332	4	11873	331	332	11475
OK	Mooreland	1	0	0	0	0	0	1
OK	Mooreland	2	0	0	44	0	2	57
OK	Mooreland	3	0	0	7	0	0	17
OK	Muskogee	3	0	0	141	0	4	137
OK	Muskogee	4	257	3	9308	256	257	8880
OK	Muskogee	5	227	2	8275	226	226	7835
OK	Muskogee	6	403	4	14421	402	403	13931
OK	Mustang	1	0	0	32	0	1	26
OK	Mustang	2	0	0	26	0	1	25
OK	Mustang	3	0	0	1	0	2	81
OK	Mustang	4	0	0	163	0	6	191
OK	NA 1 – 5030	**1	0	0	0	0	0	0
OK	NA 1 – 5030	**2	0	0	0	0	0	0
OK	NA 1 – 5030	**3	0	0	0	0	0	0
OK	Northeastern	3301	48	1	1741	48	48	1646
OK	Northeastern	3302	161	2	5933	161	161	5578
OK	Northeastern	3313	384	4	13829	383	383	13249
OK	Northeastern	3314	415	5	14879	414	414	14337
OK	Ponca	2	0	0	0	0	0	0
OK	Riverside	1501	0	0	519	0	12	417

Table 2 - Phase II Allowance Allocations

State	Plant Name	Boiler1	Allowances for Years 2000-2009				Years 2010 and Beyond	
			(A) Auction Reserve Deduction	(B) Repower-ing Deduction	(C)2 Total Annual Phase II	(D) 1993-1998 Auction Deduction	(E) Auction Reserve Deduction	(F)3 Total Annual Phase II
OK	Riverside	1502	0	0	285	0	10	335
OK	Seminole	1	0	0	412	0	11	383
OK	Seminole	2	0	0	453	0	12	432
OK	Seminole	3	1	0	494	1	15	505
OK	Sooner	1	288	3	10468	287	287	9938
OK	Sooner	2	274	3	9976	273	273	9451
OK	Southwestern	8002	0	0	15	0	1	17
OK	Southwestern	8003	0	0	164	0	5	165
OK	Southwestern	801N	0	0	3	0	0	5
OK	Southwestern	801S	0	0	0	0	0	3
OK	Tulsa	1402	0	0	98	0	1	45
OK	Tulsa	1403	0	0	4	0	0	3
OK	Tulsa	1404	0	0	58	0	2	64
OR	Boardman	1SG	388	4	13373	387	387	13401
PA	Armstrong	1	176	2	6213	175	175	6226
PA	Armstrong	2	188	2	6652	188	188	6665
PA	Bruce Mansfield	1	369	4	12713	368	368	12740
PA	Bruce Mansfield	2	408	4	14065	407	407	14094
PA	Bruce Mansfield	3	420	5	14468	419	419	14498
PA	Brunner Island	1	338	4	11968	337	338	11992
PA	Brunner Island	2	379	4	13410	378	378	13437
PA	Brunner Island	3	656	8	23201	654	655	23250
PA	Cheswick	1	477	5	16886	476	476	16919
PA	Conemaugh	1	734	9	25929	732	733	25982
PA	Conemaugh	2	813	10	28742	811	812	28800
PA	Cromby	1	64	1	2202	64	64	2207
PA	Cromby	2	61	1	2109	61	61	2114
PA	Delaware	71	22	0	743	22	22	745
PA	Delaware	81	16	0	537	16	16	538
PA	Eddystone	1	74	1	2844	74	74	2560
PA	Eddystone	2	73	1	3004	72	72	2504
PA	Eddystone	3	55	1	1894	55	55	1899
PA	Eddystone	4	58	1	2010	58	58	2015
PA	Elrama	1	21	0	1650	21	21	711
PA	Elrama	2	19	0	1616	19	19	662
PA	Elrama	3	44	0	1568	44	44	1528
PA	Elrama	4	75	1	2579	75	75	2584
PA	F R Phillips	1	3	0	663	3	3	145
PA	F R Phillips	2	3	0	504	3	3	110
PA	F R Phillips	3	8	0	1165	8	8	253
PA	F R Phillips	4	7	0	1112	7	7	242
PA	F R Phillips	5	7	0	1131	7	7	247
PA	F R Phillips	6	32	0	2022	32	32	1109
PA	Front Street	10	36	0	1176	36	36	1176
PA	Front Street	7	9	0	294	9	9	295

Table 2 - Phase II Allowance Allocations

State	Plant Name	Boiler1	Allowances for Years 2000-2009				Years 2010 and Beyond	
			(A) Auction Reserve Deduction	(B) Repower-ing Deduction	(C)2 Total Annual Phase II	(D) 1993-1998 Auction Deduction	(E) Auction Reserve Deduction	(F)3 Total Annual Phase II
PA	Front Street	8	9	0	294	9	9	295
PA	Front Street	9	36	0	1176	36	36	1176
PA	Hatfield's Ferry	1	461	5	16308	460	460	16340
PA	Hatfield's Ferry	2	455	5	16089	453	454	16122
PA	Hatfield's Ferry	3	491	5	17360	489	490	17394
PA	Holtwood	17	104	1	3570	103	103	3578
PA	Homer City	1	515	6	17753	514	514	17790
PA	Homer City	2	447	5	16309	446	446	15441
PA	Homer City	3	802	10	27619	800	801	27676
PA	Hunlock Power	6	65	1	2256	65	65	2261
PA	Keystone	1	819	10	28209	817	818	28267
PA	Keystone	2	872	10	30035	870	871	30098
PA	Martins Creek	1	154	2	5455	154	154	5467
PA	Martins Creek	2	156	2	5526	156	156	5538
PA	Martins Creek	3	382	4	13179	381	382	13205
PA	Martins Creek	4	352	4	12123	351	351	12148
PA	Mitchell	1	0	0	0	0	0	0
PA	Mitchell	2	0	0	1	0	0	1
PA	Mitchell	3	0	0	0	0	0	0
PA	Mitchell	33	90	1	3528	90	90	3103
PA	Montour	1	696	9	24182	693	695	24018
PA	Montour	2	717	9	24671	714	716	24723
PA	New Castle	1	37	0	1292	37	18	621
PA	New Castle	2	41	0	1439	41	20	692
PA	New Castle	3	82	1	2842	82	82	2848
PA	New Castle	4	75	1	2816	75	75	2607
PA	New Castle	5	131	1	4513	131	131	4522
PA	Portland	1	72	1	2559	72	72	2565
PA	Portland	2	125	1	4412	124	124	4421
PA	Schuykill	1	17	0	572	17	17	573
PA	Seward	12	32	0	1096	32	32	1098
PA	Seward	14	32	0	1096	32	32	1098
PA	Seward	15	145	2	5000	145	145	5010
PA	Shawville	1	125	1	4429	125	125	4437
PA	Shawville	2	126	1	4455	126	126	4463
PA	Shawville	3	173	2	6109	172	172	6122
PA	Shawville	4	171	2	6068	171	171	6081
PA	Springdale	77	0	0	0	0	0	0
PA	Springdale	88	0	0	0	0	0	0
PA	Sunbury	1A	52	0	1818	52	52	1822
PA	Sunbury	1B	52	0	1817	52	52	1821
PA	Sunbury	2A	52	0	1818	52	52	1822
PA	Sunbury	2B	52	0	1818	52	52	1822
PA	Sunbury	3	115	1	4028	115	115	4036
PA	Sunbury	4	148	2	5248	148	148	5259

Table 2 - Phase II Allowance Allocations

State	Plant Name	Boiler1	Allowances for Years 2000-2009				Years 2010 and Beyond	
			(A) Auction Reserve Deduction	(B) Repower-ing Deduction	(C)2 Total Annual Phase II	(D) 1993-1998 Auction Deduction	(E) Auction Reserve Deduction	(F)3 Total Annual Phase II
PA	Titus	1	55	1	2149	55	55	1901
PA	Titus	2	63	1	2271	63	63	2179
PA	Titus	3	58	1	2194	58	58	1994
PA	Warren	1	21	0	720	21	21	721
PA	Warren	2	21	0	720	21	21	721
PA	Warren	3	21	0	740	21	21	741
PA	Warren	4	21	0	740	21	21	741
PA	Williamsburg	11	27	0	935	27	27	936
RI	Manchester Street	12	14	0	512	14	14	485
RI	Manchester Street	6	19	0	693	19	19	657
RI	Manchester Street	7	13	0	458	13	13	435
RI	South Street	121	30	0	1086	30	30	1048
RI	South Street	122	28	0	946	28	28	950
SC	Canadys Steam	CAN1	85	1	3247	85	85	2937
SC	Canadys Steam	CAN2	67	1	2978	67	67	2309
SC	Canadys Steam	CAN3	90	1	4222	90	90	3105
SC	Cope Station	COP1	76	1	2615	76	76	2620
SC	Cross	1	162	2	5601	162	162	5612
SC	Cross	2	259	3	8938	259	259	8956
SC	Dolphus M Grainger	1	90	1	3113	90	90	3119
SC	Dolphus M Grainger	2	8	0	277	8	8	277
SC	H B Robinson	1	84	1	3814	84	84	2908
SC	Hagood	HAG1	0	0	3	0	0	3
SC	Hagood	HAG2	0	0	451	0	0	2
SC	Hagood	HAG3	0	0	787	0	0	6
SC	Hagood	HAG4	28	0	948	27	27	951
SC	Jefferies	1	0	0	0	0	0	0
SC	Jefferies	2	0	0	1	0	0	1
SC	Jefferies	3	98	1	3885	98	98	3378
SC	Jefferies	4	91	1	3742	91	91	3155
SC	McMeekin	MCM1	118	1	4079	118	118	4087
SC	McMeekin	MCM2	117	1	4037	117	117	4045
SC	NA 1 – 7106	**GT1	0	0	0	0	0	0
SC	Urquhart	URQ1	64	1	2194	64	64	2199
SC	Urquhart	URQ2	49	1	1926	49	49	1685
SC	Urquhart	URQ3	84	1	2913	84	84	2919
SC	W S Lee	1	26	0	2133	26	26	900
SC	W S Lee	2	33	0	2277	33	33	1132
SC	W S Lee	3	51	1	3443	51	51	1773
SC	Wateree	WAT1	282	3	9714	281	281	9735
SC	Wateree	WAT2	261	3	9267	261	261	9022
SC	Williams	WIL1	459	5	15816	458	458	15849
SC	Winyah	1	220	2	7572	219	219	7588
SC	Winyah	2	148	2	6232	148	148	5128
SC	Winyah	3	73	1	3609	72	73	2508

Table 2 - Phase II Allowance Allocations

State	Plant Name	Boiler1	Allowances for Years 2000-2009				Years 2010 and Beyond	
			(A) Auction Reserve Deduction	(B) Repower-ing Deduction	(C)2 Total Annual Phase II	(D) 1993-1998 Auction Deduction	(E) Auction Reserve Deduction	(F)3 Total Annual Phase II
SC	Winyah	4	99	1	3426	99	99	3433
SD	Angus Anson Site	2	25	0	851	25	25	853
SD	Angus Anson Site	3	30	0	1020	30	30	1022
SD	Big Stone	1	376	4	13711	375	375	12973
SD	Huron	**2A	2	0	80	2	2	80
SD	Huron	**2B	3	0	103	3	3	103
SD	Pathfinder	11	0	0	11	0	0	11
SD	Pathfinder	12	0	0	2	0	0	2
SD	Pathfinder	13	0	0	2	0	0	2
TN	Allen	1	187	2	6606	186	186	6619
TN	Allen	2	204	2	7229	204	204	7243
TN	Allen	3	191	2	6754	190	191	6767
TN	Bull Run	1	727	9	25038	725	726	25090
TN	Cumberland	1	1057	12	37374	1054	1055	37451
TN	Cumberland	2	1156	14	40882	1153	1154	40967
TN	Gallatin	1	215	2	7603	214	214	7618
TN	Gallatin	2	211	2	7462	210	211	7476
TN	Gallatin	3	244	3	8632	243	244	8649
TN	Gallatin	4	259	3	9165	258	259	9183
TN	John Sevier	1	184	2	6359	184	184	6372
TN	John Sevier	2	184	2	6356	184	184	6369
TN	John Sevier	3	189	2	6517	189	189	6531
TN	John Sevier	4	193	2	6667	193	193	6680
TN	Johnsonville	1	95	1	3357	95	95	3364
TN	Johnsonville	10	92	1	3255	92	92	3262
TN	Johnsonville	2	98	1	3464	98	98	3471
TN	Johnsonville	3	102	1	3627	102	102	3633
TN	Johnsonville	4	97	1	3442	97	97	3449
TN	Johnsonville	5	100	1	3552	100	100	3558
TN	Johnsonville	6	96	1	3403	96	96	3410
TN	Johnsonville	7	109	1	3870	109	109	3878
TN	Johnsonville	8	106	1	3752	106	106	3759
TN	Johnsonville	9	86	1	3051	86	86	3057
TN	Kingston	1	120	1	4151	120	120	4158
TN	Kingston	2	115	1	3991	115	115	3966
TN	Kingston	3	138	1	4750	137	138	4760
TN	Kingston	4	146	2	5039	146	146	5050
TN	Kingston	5	180	2	6192	179	179	6206
TN	Kingston	6	184	2	6345	184	184	6358
TN	Kingston	7	179	2	6187	179	179	6200
TN	Kingston	8	168	2	5782	167	167	5794
TN	Kingston	9	186	2	6403	185	185	6417
TN	Watts Bar	A	0	0	0	0	0	0
TN	Watts Bar	B	0	0	0	0	0	0
TN	Watts Bar	C	0	0	0	0	0	0

Table 2 - Phase II Allowance Allocations

State	Plant Name	Boiler1	Allowances for Years 2000-2009				Years 2010 and Beyond	
			(A) Auction Reserve Deduction	(B) Repower-ing Deduction	(C)2 Total Annual Phase II	(D) 1993-1998 Auction Deduction	(E) Auction Reserve Deduction	(F)3 Total Annual Phase II
TN	Watts Bar	D	0	0	0	0	0	0
TX	Barney M Davis	1	1	0	496	1	12	412
TX	Barney M Davis	2	1	0	398	1	11	384
TX	Big Brown	1	584	6	20979	582	583	20161
TX	Big Brown	2	558	6	19872	557	557	19286
TX	Bryan	6	0	0	19	0	1	22
TX	C E Newman	BW5	0	0	3	0	0	4
TX	Cedar Bayou	CBY1	0	0	814	0	20	702
TX	Cedar Bayou	CBY2	0	0	921	0	25	857
TX	Cedar Bayou	CBY3	0	0	725	0	20	707
TX	Coleto Creek	**2	0	0	0	0	0	0
TX	Coleto Creek	1	400	4	14717	399	399	13807
TX	Collin	1	1	0	92	1	3	94
TX	Concho	7	0	0	11	0	0	13
TX	Dallas	3	0	0	27	0	1	23
TX	Dallas	9	0	0	26	0	1	25
TX	Dansby	1	1	0	94	1	3	106
TX	Decker Creek	1	0	0	128	0	4	150
TX	Decker Creek	2	0	0	195	0	5	181
TX	Decordova	1	1	0	1018	1	25	881
TX	Deepwater	DWP9	0	0	28	0	1	37
TX	E S Joslin	1	0	0	260	0	6	210
TX	Eagle Mountain	1	0	0	52	0	1	43
TX	Eagle Mountain	2	1	0	140	1	3	116
TX	Eagle Mountain	3	0	0	100	0	3	109
TX	Forest Grove	**1	0	0	0	0	0	0
TX	Fort Phantom	1	0	0	126	0	4	129
TX	Fort Phantom	2	1	0	187	1	6	192
TX	Generic Station	**1	0	0	0	0	0	0
TX	Generic Station	**2	0	0	0	0	0	0
TX	Gibbons Creek	1	403	4	14410	401	402	13904
TX	Graham	1	0	0	235	0	6	194
TX	Graham	2	1	0	496	1	12	406
TX	Greens Bayou	GBY1	0	0	1	0	0	3
TX	Greens Bayou	GBY2	0	0	2	0	0	3
TX	Greens Bayou	GBY3	0	0	15	0	0	6
TX	Greens Bayou	GBY4	0	0	19	0	0	8
TX	Greens Bayou	GBY5	1	0	352	1	9	308
TX	Handley	1A	0	0	7	0	0	3
TX	Handley	1B	0	0	0	0	0	3
TX	Handley	2	0	0	21	0	0	15
TX	Handley	3	1	0	423	1	11	393
TX	Handley	4	0	0	118	0	3	112
TX	Handley	5	1	0	136	1	4	127
TX	Harrington Station	061B	223	2	8232	223	223	7711

Table 2 - Phase II Allowance Allocations

State	Plant Name	Boiler1	Allowances for Years 2000-2009				Years 2010 and Beyond	
			(A) Auction Reserve Deduction	(B) Repower-ing Deduction	(C)2 Total Annual Phase II	(D) 1993-1998 Auction Deduction	(E) Auction Reserve Deduction	(F)3 Total Annual Phase II
TX	Harrington Station	062B	237	3	8718	237	237	8197
TX	Harrington Station	063B	253	3	9266	252	253	8741
TX	Hiram Clarke	HOC1	0	0	0	0	0	0
TX	Hiram Clarke	HOC2	0	0	0	0	0	0
TX	Hiram Clarke	HOC3	0	0	3	0	0	2
TX	Hiram Clarke	HOC4	0	0	2	0	0	1
TX	Holly Ave	1	0	0	59	0	2	71
TX	Holly Ave	2	0	0	71	0	2	76
TX	Holly Street	1	0	0	49	0	0	17
TX	Holly Street	2	0	0	31	0	1	18
TX	Holly Street	3	0	0	68	0	2	66
TX	Holly Street	4	0	0	43	0	2	82
TX	J K Spruce	**2	0	0	0	0	0	0
TX	J K Spruce	BLR1	194	2	6690	194	194	6703
TX	J L Bates	1	0	0	48	0	1	46
TX	J L Bates	2	0	0	124	0	3	101
TX	J T Deely	1	364	4	13132	363	363	12571
TX	J T Deely	2	380	4	13701	379	379	13113
TX	Jones Station	151B	0	0	125	0	2	74
TX	Jones Station	152B	0	0	93	0	2	67
TX	Knox Lee	2	0	0	0	0	0	0
TX	Knox Lee	3	0	0	5	0	0	2
TX	Knox Lee	4	0	0	29	0	0	13
TX	Knox Lee	5	0	0	251	0	4	149
TX	La Palma	7	0	0	178	0	4	153
TX	Lake Creek	1	0	0	39	0	1	29
TX	Lake Creek	2	0	0	191	0	4	141
TX	Lake Hubbard	1	1	0	170	1	6	201
TX	Lake Hubbard	2	2	0	604	2	17	578
TX	Laredo	1	0	0	15	0	0	16
TX	Laredo	2	0	0	14	0	0	14
TX	Laredo	3	0	0	85	0	3	116
TX	Leon Creek	3	0	0	2	0	0	2
TX	Leon Creek	4	0	0	10	0	0	8
TX	Lewis Creek	1	0	0	317	0	8	263
TX	Lewis Creek	2	0	0	271	0	7	257
TX	Limesetone	LIM1	687	8	23779	685	687	23725
TX	Limesetone	LIM2	411	4	14154	409	410	14182
TX	Lon C Hill	1	0	0	9	0	0	7
TX	Lon C Hill	2	0	0	10	0	0	7
TX	Lon C Hill	3	0	0	179	0	3	91
TX	Lon C Hill	4	0	0	197	0	7	238
TX	Lone Star	1	0	0	0	0	0	10
TX	Malakoff	**1	45	0	1539	45	45	1542
TX	Malakoff	**2	0	0	0	0	0	0

Table 2 - Phase II Allowance Allocations

State	Plant Name	Boiler1	Allowances for Years 2000-2009				Years 2010 and Beyond	
			(A) Auction Reserve Deduction	(B) Repower-ing Deduction	(C)2 Total Annual Phase II	(D) 1993-1998 Auction Deduction	(E) Auction Reserve Deduction	(F)3 Total Annual Phase II
TX	Martin Lake	1	933	11	33220	931	932	32202
TX	Martin Lake	2	905	11	32255	903	903	31222
TX	Martin Lake	3	940	11	33425	937	938	32429
TX	Mission Road	3	0	0	3	0	0	8
TX	Monticello	1	659	8	23633	657	659	22760
TX	Monticello	2	639	8	22930	637	638	22061
TX	Monticello	3	987	12	35220	984	985	34043
TX	Morgan Creek	3	0	0	8	0	0	6
TX	Morgan Creek	4	0	0	72	0	2	56
TX	Morgan Creek	5	0	0	154	0	5	164
TX	Morgan Creek	6	6	0	836	6	22	777
TX	Mountain Creek	2	0	0	4	0	0	3
TX	Mountain Creek	3A	0	0	11	0	0	5
TX	Mountain Creek	3B	0	0	2	0	0	5
TX	Mountain Creek	6	1	0	63	1	2	74
TX	Mountain Creek	7	0	0	62	0	2	58
TX	Mountain Creek	8	1	0	527	1	15	535
TX	NA 1 -- 7219	**1	0	0	0	0	0	0
TX	NA 1 -- 7219	**2	0	0	0	0	0	0
TX	NA 2 -- 4274	**NA1	0	0	0	0	0	0
TX	Neches	11	0	0	0	0	0	0
TX	Neches	13	0	0	0	0	0	0
TX	Neches	15	0	0	0	0	0	0
TX	Neches	18	0	0	0	0	0	0
TX	Newman	1	0	0	14	0	1	18
TX	Newman	2	0	0	29	0	1	41
TX	Newman	3	0	0	88	0	3	94
TX	Newman	HRSG1	0	0	99	0	4	138
TX	Nichols Station	141B	0	0	77	0	2	82
TX	Nichols Station	142B	0	0	86	0	2	76
TX	Nichols Station	143B	0	0	50	0	1	31
TX	North Lake	1	1	0	131	1	4	129
TX	North Lake	2	1	0	150	1	4	141
TX	North Lake	3	2	0	294	2	7	255
TX	North Main	4	0	0	42	0	1	35
TX	North Texas	3	0	0	13	0	0	8
TX	Nueces Bay	5	0	0	1	0	0	1
TX	Nueces Bay	6	0	0	140	0	3	114
TX	Nueces Bay	7	0	0	496	0	12	431
TX	O W Sommers	1	2	0	478	2	14	477
TX	O W Sommers	2	0	0	188	0	9	322
TX	Oak Creek	1	0	0	106	0	3	107
TX	Oklaunion	1	228	2	7857	227	228	7872
TX	P H Robinson	PHR1	0	0	645	0	13	435
TX	P H Robinson	PHR2	0	0	494	0	14	491

Table 2 - Phase II Allowance Allocations

State	Plant Name	Boiler1	Allowances for Years 2000-2009				Years 2010 and Beyond	
			(A) Auction Reserve Deduction	(B) Repower-ing Deduction	(C)2 Total Annual Phase II	(D) 1993-1998 Auction Deduction	(E) Auction Reserve Deduction	(F)3 Total Annual Phase II
TX	P H Robinson	PHR3	0	0	685	0	15	506
TX	P H Robinson	PHR4	0	0	796	0	18	620
TX	Paint Creek	1	0	0	11	0	0	10
TX	Paint Creek	2	0	0	11	0	0	11
TX	Paint Creek	3	1	0	28	1	2	53
TX	Paint Creek	4	0	0	105	0	3	103
TX	Parkdale	1	0	0	34	0	1	36
TX	Parkdale	2	0	0	62	0	2	66
TX	Parkdale	3	1	0	61	1	2	76
TX	Permian Basin	5	0	0	103	0	3	105
TX	Permian Basin	6	8	0	804	8	24	828
TX	Pirkey	1	574	6	20526	572	573	19809
TX	Plant X	111B	0	0	0	0	0	0
TX	Plant X	112B	0	0	2	0	0	1
TX	Plant X	113B	0	0	89	0	1	30
TX	Plant X	114B	0	0	0	0	0	3
TX	Powerlane Plant	2	13	0	459	13	14	467
TX	Powerlane Plant	3	1	0	37	1	1	38
TX	R W Miller	**4	25	0	851	25	25	853
TX	R W Miller	**5	25	0	851	25	25	853
TX	R W Miller	1	0	0	55	0	2	54
TX	R W Miller	2	0	0	98	0	3	98
TX	R W Miller	3	0	0	218	0	5	181
TX	Ray Olinger	BW2	0	0	60	0	2	52
TX	Ray Olinger	BW3	0	0	79	0	2	86
TX	Ray Olinger	CE1	0	0	42	0	1	33
TX	Rio Pecos	5	0	0	64	0	2	69
TX	Rio Pecos	6	0	0	179	0	5	172
TX	River Crest	1	1	0	61	1	2	70
TX	Sabine	1	0	0	152	0	6	204
TX	Sabine	2	0	0	164	0	6	197
TX	Sabine	3	0	0	576	0	15	503
TX	Sabine	4	0	0	504	0	18	626
TX	Sabine	5	0	0	323	0	11	392
TX	Sam Bertron	SRB1	0	0	57	0	1	49
TX	Sam Bertron	SRB2	0	0	18	0	1	33
TX	Sam Bertron	SRB3	0	0	120	0	3	90
TX	Sam Bertron	SRB4	0	0	79	0	2	79
TX	Sam Seymour	1	437	5	15905	436	436	15087
TX	Sam Seymour	2	476	5	17391	475	475	16435
TX	Sam Seymour	3	304	3	10491	304	304	10513
TX	San Angelo	2	0	0	161	0	5	164
TX	San Miguel	SM-1	482	5	17211	481	481	16651
TX	Sandow	4	722	9	25689	719	721	24915
TX	Seaholm	9	0	0	4	0	0	3

Table 2 - Phase II Allowance Allocations

State	Plant Name	Boiler1	Allowances for Years 2000-2009				Years 2010 and Beyond	
			(A) Auction Reserve Deduction	(B) Repower-ing Deduction	(C)2 Total Annual Phase II	(D) 1993-1998 Auction Deduction	(E) Auction Reserve Deduction	(F)3 Total Annual Phase II
TX	Sim Gideon	1	0	0	47	0	1	51
TX	Sim Gideon	2	0	0	56	0	2	58
TX	Sim Gideon	3	0	0	277	0	9	321
TX	Spencer	4	0	0	19	0	1	17
TX	Spencer	5	0	0	23	0	1	22
TX	Stryker Creek	1	0	0	170	0	4	138
TX	Stryker Creek	2	1	0	525	1	16	563
TX	T C Fergusen	1	0	0	253	0	7	254
TX	T H Wharton	THW1	0	0	7	0	0	5
TX	T H Wharton	THW2	0	0	97	0	2	82
TX	TNP One	U1	62	1	2122	61	61	2127
TX	TNP One	U2	102	1	3499	101	101	3507
TX	Tolk Station	171B	407	4	14777	406	406	14057
TX	Tolk Station	172B	403	4	14440	402	402	13925
TX	Tradinghouse	1	0	0	593	0	15	516
TX	Tradinghouse	2	1	0	995	1	26	903
TX	Trinidad	7	0	0	6	0	0	4
TX	Trinidad	8	0	0	1	0	0	3
TX	Trinidad	9	0	0	135	0	3	115
TX	Twin Oak	1	232	3	8012	232	232	8028
TX	Twin Oak	2	45	0	1540	45	45	1542
TX	V H Braunig	1	0	0	78	0	4	122
TX	V H Braunig	2	0	0	121	0	4	140
TX	V H Braunig	3	0	0	416	0	11	392
TX	Valley	1	0	0	77	0	3	97
TX	Valley	2	1	0	518	1	16	540
TX	Valley	3	0	0	124	0	4	129
TX	Victoria	5	0	0	6	0	0	6
TX	Victoria	6	0	0	8	0	0	4
TX	Victoria	7	0	0	110	0	3	102
TX	Victoria	8	0	0	238	0	6	224
TX	W A Parish	WAP1	0	0	57	0	1	51
TX	W A Parish	WAP2	0	0	56	0	1	45
TX	W A Parish	WAP3	0	0	245	0	5	158
TX	W A Parish	WAP4	0	0	558	0	15	511
TX	W A Parish	WAP5	634	8	22870	632	632	21881
TX	W A Parish	WAP6	573	6	20755	572	572	19803
TX	W A Parish	WAP7	416	5	15137	415	415	14365
TX	W A Parish	WAP8	186	2	7285	185	186	6421
TX	W B Tuttle	1	0	0	2	0	0	3
TX	W B Tuttle	2	0	0	19	0	1	17
TX	W B Tuttle	3	0	0	11	0	0	14
TX	W B Tuttle	4	0	0	48	0	2	52
TX	Webster	WEB1	0	0	14	0	0	5
TX	Webster	WEB2	0	0	17	0	0	7

Table 2 - Phase II Allowance Allocations

State	Plant Name	Boiler1	Allowances for Years 2000-2009				Years 2010 and Beyond	
			(A) Auction Reserve Deduction	(B) Repower-ing Deduction	(C)2 Total Annual Phase II	(D) 1993-1998 Auction Deduction	(E) Auction Reserve Deduction	(F)3 Total Annual Phase II
TX	Webster	WEB3	0	0	343	0	9	320
TX	Welsh	1	370	4	13325	369	369	12772
TX	Welsh	2	357	4	12842	356	356	12334
TX	Welsh	3	420	5	15215	419	420	14517
TX	Willkes	1	0	0	30	0	2	58
TX	Willkes	2	0	0	118	0	3	93
TX	Willkes	3	0	0	129	0	2	74
UH	Bonanza	1-1	255	3	10782	255	255	8818
UH	Carbon	1	55	1	1912	55	55	1917
UH	Carbon	2	72	1	2498	72	72	2503
UH	Gadsby	1	1	0	24	1	1	24
UH	Gadsby	2	12	0	1690	12	12	408
UH	Gadsby	3	44	0	2265	44	44	1520
UH	Hale	1	0	0	1	0	0	1
UH	Hunter (Emery)	1	216	2	7452	216	216	7466
UH	Hunter (Emery)	2	231	3	7957	230	230	7974
UH	Hunter (Emery)	3	326	4	11250	326	326	11273
UH	Huntington	1	230	2	7923	229	229	7940
UH	Huntington	2	283	3	9750	282	282	9771
UH	Intermountain	1SGA	83	1	2874	83	83	2880
UH	Intermountain	2SGA	84	1	2894	84	84	2900
VT	J C McNeil	1	1	0	104	1	1	38
VA	Bremo Power Station	3	51	1	2028	51	51	1768
VA	Bremo Power Station	4	150	2	5158	149	149	5170
VA	Chesapeake	1	22	0	2117	22	22	764
VA	Chesapeake	2	29	0	2210	29	29	1000
VA	Chesapeake	3	132	1	4559	132	132	4567
VA	Chesapeake	4	170	2	5870	169	169	5861
VA	Chesterfield	**8A	40	0	1387	40	40	1390
VA	Chesterfield	3	54	1	2560	54	54	1856
VA	Chesterfield	4	135	1	4669	135	135	4678
VA	Chesterfield	5	266	3	9163	265	265	9182
VA	Chesterfield	6	477	5	17134	476	476	16470
VA	Clinch River	1	154	2	5346	153	153	5302
VA	Clinch River	2	177	2	6111	177	177	6123
VA	Clinch River	3	164	2	5649	163	164	5661
VA	Clover	1	85	1	2937	85	85	2943
VA	Clover	2	85	1	2937	85	85	2943
VA	East Chandler	**2	0	0	0	0	0	0
VA	Glen Lyn	51	24	0	1152	24	24	815
VA	Glen Lyn	52	23	0	1113	23	23	787
VA	Glen Lyn	6	152	2	5533	152	152	5251
VA	Possum Point	1	0	0	0	0	0	0
VA	Possum Point	2	0	0	0	0	0	0
VA	Possum Point	3	65	1	2646	65	65	2253

Table 2 - Phase II Allowance Allocations

State	Plant Name	Boiler1	Allowances for Years 2000-2009				Years 2010 and Beyond	
			(A) Auction Reserve Deduction	(B) Repower-ing Deduction	(C)2 Total Annual Phase II	(D) 1993-1998 Auction Deduction	(E) Auction Reserve Deduction	(F)3 Total Annual Phase II
VA	Possum Point	4	195	2	6723	194	195	6736
VA	Possum Point	5	126	1	4335	125	126	4343
VA	Potomac River	1	48	1	2333	48	48	1650
VA	Potomac River	2	49	1	2308	48	48	1677
VA	Potomac River	3	80	1	2755	80	80	2761
VA	Potomac River	4	88	1	3036	88	88	3043
VA	Potomac River	5	84	1	2912	84	84	2918
VA	Yorktown	1	135	1	4670	135	135	4679
VA	Yorktown	2	130	1	4673	130	130	4503
VA	Yorktown	3	183	2	6303	182	183	6316
WA	Centralia	BW21	553	6	19070	552	552	19108
WA	Centralia	BW22	590	6	20331	588	589	20373
WA	Shuffleton	1	0	0	0	0	0	0
WA	Shuffleton	2	0	0	0	0	0	0
WA	Shuffleton	3	0	0	0	0	0	0
WV	Albright	1	57	1	1973	57	57	1978
WV	Albright	2	60	1	2053	59	59	2058
WV	Albright	3	130	1	4597	130	130	4606
WV	Fort Martin	1	507	5	17930	505	506	17965
WV	Fort Martin	2	502	5	17762	501	501	17797
WV	Harrison	1	592	6	20960	591	591	21002
WV	Harrison	2	562	6	19896	561	561	19936
WV	Harrison	3	506	5	17893	504	505	17928
WV	John E Amos	1	655	8	22581	653	654	22630
WV	John E Amos	2	752	9	25890	750	751	25944
WV	John E Amos	3	1205	14	41498	1202	1203	41584
WV	Kammer	1	228	2	8080	228	228	8095
WV	Kammer	2	237	3	8387	236	237	8404
WV	Kammer	3	212	2	7497	211	211	7512
WV	Kanawha River	1	115	1	4461	115	115	3981
WV	Kanawha River	2	103	1	4290	102	102	3545
WV	Mitchell	1	536	6	18957	534	535	18995
WV	Mitchell	2	554	6	19616	553	553	19656
WV	Mountaineer (1301)	1	1023	12	35211	1020	1021	35285
WV	Mt Storm	1	533	6	18849	531	532	18887
WV	Mt Storm	2	500	5	17683	498	499	17718
WV	Mt Storm	3	517	6	18290	516	516	18327
WV	Phil Sporn	11	70	1	3129	70	70	2434
WV	Phil Sporn	21	59	1	2964	59	59	2048
WV	Phil Sporn	31	85	1	3312	85	85	2932
WV	Phil Sporn	41	67	1	3052	66	67	2302
WV	Phil Sporn	51	305	3	10614	304	304	10519
WV	Pleasants	1	511	6	17597	509	510	17633
WV	Pleasants	2	586	6	20188	584	585	20229
WV	Rivesville	7	20	0	1237	20	20	696

Table 2 - Phase II Allowance Allocations

State	Plant Name	Boiler1	Allowances for Years 2000-2009				Years 2010 and Beyond	
			(A) Auction Reserve Deduction	(B) Repower-ing Deduction	(C)2 Total Annual Phase II	(D) 1993-1998 Auction Deduction	(E) Auction Reserve Deduction	(F)3 Total Annual Phase II
WV	Rivesville	8	60	1	2528	60	60	2086
WV	Willow Island	1	28	0	1496	28	28	961
WV	Willow Island	2	117	1	4683	116	116	4029
WI	Alma	B4	35	0	1193	34	35	1194
WI	Alma	B5	55	1	1905	55	55	1910
WI	Bay Front	1	14	0	1046	14	14	512
WI	Bay Front	2	16	0	529	16	16	530
WI	Bay Front	3	0	0	0	0	0	0
WI	Bay Front	4	0	0	33	0	0	16
WI	Bay Front	5	4	0	281	4	4	135
WI	Blount Street	11	0	0	1	0	0	1
WI	Blount Street	3	0	0	6	0	0	6
WI	Blount Street	5	0	0	7	0	0	7
WI	Blount Street	6	0	0	7	0	0	7
WI	Blount Street	7	3	0	1476	3	3	101
WI	Blount Street	8	12	0	1130	12	12	415
WI	Blount Street	9	16	0	1183	16	16	555
WI	Columbia	1	449	5	15479	448	448	15512
WI	Columbia	2	254	3	8755	253	254	8772
WI	Combustion Turbine	**2	0	0	0	0	0	0
WI	Commerce	25	0	0	4	0	0	4
WI	Concord	**1	4	0	126	4	4	126
WI	Concord	**2	4	0	126	4	4	126
WI	Concord	**3	4	0	126	4	4	126
WI	Concord	**4	4	0	126	4	4	126
WI	Edgewater	3	36	0	1237	36	36	1239
WI	Edgewater	4	302	3	10393	301	301	10415
WI	Edgewater	5	332	4	11455	331	332	11479
WI	Genoa	1	233	3	8016	232	232	8034
WI	J P Madgett	B1	209	2	7434	208	209	7219
WI	Manitowoc	6	18	0	672	18	18	672
WI	Manitowoc	7	24	0	814	24	24	813
WI	Manitowoc	8	7	0	238	7	7	238
WI	NA 1 -- 7205	**1	0	0	0	0	0	0
WI	NA 1 -- 7205	**2	0	0	0	0	0	0
WI	NA 1 -- 7205	**3	0	0	0	0	0	0
WI	NA3	**1	0	0	0	0	0	0
WI	NA4	**1	0	0	0	0	0	0
WI	Nelson Dewey	1	73	1	2523	73	73	2528
WI	Nelson Dewey	2	81	1	2807	81	81	2813
WI	North Oak Creek	1	61	1	2118	61	61	2122
WI	North Oak Creek	2	60	1	2080	60	60	2084
WI	North Oak Creek	3	62	1	2129	62	62	2133
WI	North Oak Creek	4	72	1	2481	72	72	2487
WI	Paris	**1	4	0	124	4	4	124

Table 2 - Phase II Allowance Allocations

State	Plant Name	Boiler1	Allowances for Years 2000-2009				Years 2010 and Beyond	
			(A) Auction Reserve Deduction	(B) Repower-ing Deduction	(C)2 Total Annual Phase II	(D) 1993-1998 Auction Deduction	(E) Auction Reserve Deduction	(F)3 Total Annual Phase II
WI	Paris	**2	4	0	124	4	4	124
WI	Paris	**3	4	0	124	4	4	124
WI	Paris	**4	4	0	124	4	4	124
WI	Pleasant Prairie	1	342	4	11798	341	342	11822
WI	Pleasant Prairie	2	484	5	16675	482	483	16709
WI	Port Washington	1	15	0	529	15	15	530
WI	Port Washington	2	30	0	1031	30	30	1033
WI	Port Washington	3	25	0	858	25	25	860
WI	Port Washington	4	23	0	804	23	23	806
WI	Port Washington	5	31	0	1061	31	31	1063
WI	Pulliam	3	4	0	140	4	4	139
WI	Pulliam	4	6	0	208	6	6	209
WI	Pulliam	5	18	0	607	18	18	608
WI	Pulliam	6	23	0	791	23	23	792
WI	Pulliam	7	59	1	2035	59	59	2039
WI	Pulliam	8	91	1	3152	91	91	3159
WI	Rock River	1	45	0	1560	45	45	1562
WI	Rock River	2	43	0	1482	43	43	1484
WI	South Fond du Lac	**CT1	19	0	639	18	18	640
WI	South Fond du Lac	**CT2	1	0	39	1	1	39
WI	South Fond du Lac	**CT3	1	0	39	1	1	39
WI	South Fond du Lac	**CT4	0	0	0	0	0	0
WI	South Oak Creek	5	113	1	3884	112	113	3892
WI	South Oak Creek	6	141	2	4859	141	141	4870
WI	South Oak Creek	7	189	2	6502	188	188	6516
WI	South Oak Creek	8	185	2	6390	185	185	6402
WI	Stoneman	B1	6	0	177	6	6	176
WI	Stoneman	B2	6	0	223	6	6	224
WI	Valley	1	45	0	1805	45	45	1570
WI	Valley	2	46	0	1824	46	46	1586
WI	Valley	3	42	0	1954	42	42	1453
WI	Valley	4	41	0	1900	41	41	1414
WI	West Marinette	**33	22	0	765	22	22	766
WI	Weston	1	22	0	762	22	22	764
WI	Weston	2	53	1	1809	52	52	1813
WI	Weston	3	281	3	9701	281	281	9721
WY	Dave Johnston	BW41	131	1	4705	130	131	4519
WY	Dave Johnston	BW42	127	1	4571	127	127	4396
WY	Dave Johnston	BW43	246	3	8827	246	246	8513
WY	Dave Johnston	BW44	185	2	6802	184	184	6381
WY	Jim Bridger	BW71	583	6	20907	581	582	20134
WY	Jim Bridger	BW72	571	6	20464	569	570	19712
WY	Jim Bridger	BW73	547	6	19584	545	546	18876
WY	Jim Bridger	BW74	96	1	4064	96	96	3329
WY	Laramie River	1	122	1	5112	122	122	4228

Table 2 - Phase II Allowance Allocations

State	Plant Name	Boiler1	Allowances for Years 2000-2009				Years 2010 and Beyond	
			(A) Auction Reserve Deduction	(B) Repower-ing Deduction	(C)2 Total Annual Phase II	(D) 1993-1998 Auction Deduction	(E) Auction Reserve Deduction	(F)3 Total Annual Phase II
WY	Laramie River	2	104	1	4302	104	104	3590
WY	Laramie River	3	93	1	3822	93	93	3208
WY	Naughton	1	144	2	5201	144	144	4972
WY	Naughton	2	185	2	6741	185	185	6400
WY	Naughton	3	141	2	5214	141	141	4879
WY	Wyodak	BW91	513	6	18311	512	512	17731

Footnotes:

1 "**" in the boiler identifier denotes a planned unit or a unit for which the boiler number is unavailable.

2 Column (C) is calculated as follows: Adjusted basic allowances for 2000 (not shown) - Column A - Column B - Conservation/Renewable reserve deduction (not shown) + Additional basic (section 405(a)(3)) (not shown) + Total bonus (not shown)

3 Column (F) is calculated as follows: Adjusted basic allowances for 2010 (not shown) - Column E + Additional basic (section 405(a)(3)) (not shown)

4 The allowances shown in this table assume that these units fully qualify for section 405(i)(2). If Monroe units 1 through 4 do not qualify, instead of the allowances listed above, Anclote units 1 and 2 and Monroe units 1 through 4 will receive the following allocations:

Plant	Boiler	Column A	Column B	Col. C	Column D	Column E	Column F
Anclote	1	323	4	13887	297	323	11165
Anclote	2	343	4	13892	314	342	11839
Monroe	1	686	8	23660	690	686	23708
Monroe	2	707	8	24298	716	705	24350
Monroe	3	660	8	22763	670	660	22810
Monroe	4	716	9	24608	737	714	24664

BILLING CODE: 6560–50–C

(3) The owner of each unit listed in the following table shall surrender, for each allowance listed in Column A or B of such table, an allowance of the same or earlier compliance use date and shall return to the Administrator any proceeds received from allowances withheld from the unit, as listed in Column C of such table. The allowances shall be surrendered and the proceeds shall be returned by December 28, 1998.

State	Plant name	Unit	Allowances for 2000 through 2009 column (A)	Allowances for 2010 and thereafter column (B)	Proceeds
CA	El Centro	2	285	272	$2749.48
CO	Valmont	11	4	0	0
FL	Lauderdale	PFL4	776	781	7904.74
FL	Lauderdale	PFL5	796	802	7904.74
LA	R S Nelson	1	30	34	0
LA	R S Nelson	2	33	32	0
MD	R P Smith	9	0	56	687.37
NM	Maddox	**3	85	85	687.37
SD	Mobile	**2	17	17	0
VA	Chesterfield	**8B	409	411	4124.21
WI	Blount Street	7	0	13	343.68
WI	Blount Street	8	0	294	3093.16
WI	Blount Street	9	0	355	3436.84

§ 73.11 [Removed and Reserved]

3. Section 73.11 is removed and reserved.

§ 73.12 [Removed and Reserved]

4. Paragraph (b) of § 73.12 is removed and reserved.

§ 73.13 [Amended]

5. Paragraph (b) of § 73.13 is amended by revising the words ''§§ 73.16, 73.18,'' to read ''§§ 73.18,''.

§ 73.16 [Removed and Reserved]

6. Section 73.16 is removed and reserved.

7. Section 73.19 is amended by revising paragraph (a)(5) and removing and reserving paragraph (b) to read as follows:

§ 73.19 Certain units with declining SO_2 rates.

(a) * * *

(5) Its actual SO_2 emission rate is less than 1.2 lb/mmBtu in any one calendar year from 1996 through 1999, as reported under part 75 of this chapter;

* * * * *

8. Section 73.21 is amended by:

a. In paragraph (a) revising the words ''§ 73.11'' to read ''§ 73.10(b)''; and revising the words ''=Unit's Year 2000 Adjusted Basic Allowances as calculated at § 73.11(a)(3)'' to read ''are as listed in the following table'' and adding a table as set forth below:

b. In paragraph (b) revising the words ''§ 73.11(a) and (b)'' to read ''§ 73.10(b)'';

c. In paragraph (c)(1) revising the words ''=Unit's Year 2000 Adjusted Basic Allowances as calculated at § 73.11(a)(3)'' to read ''are as listed in the table in paragraph (a) of this section.''; and

d. Revising paragraph (c)(2) to read as follows:

§ 73.21 Phase II repowering allowances.

(a) * * *

Unit	Year 2000 adjusted basic allowances
RE Burger 1	1273
RE Burger 2	1245
RE Burger 3	1286
RE Burger 4	1316
RE Burger 5	1336
RE Burger 6	1332
New Castle 1	1334
New Castle 2	1485
New Castle 3	2935
New Castle 4	2686
New Castle 5	5481

(c)(2) The Administrator will reallocate any allowances forfeited in paragraph (c)(1) of this section with a compliance use date of 2000 or any allowances remaining in the repowering reserve to all Table 2 units' years 2000 through 2009 subaccounts in the following manner:

$$\text{Reallocation} = \text{Forfeited Repowering Allowances} \times \frac{\text{Unit's Deductions at Table 2 Column B}}{27124}$$

9. Section 73.27 is amended by removing paragraph (a)(3) and revising paragraphs (a)(2), (b)(2) through (5), and (c)(2) through (5) to read as follows:

§ 73.27 Special allowance reserve.

(a) Establishment of reserve. * * *

(2) The Administrator will allocate 250,000 allowances annually for calendar year 2000 and each year thereafter to the Auction Subaccount of the Special Allowance Reserve.

(b) Distribution of proceeds. * * *

(2) Until June 1, 1998, monetary proceeds from the auctions of allowances from the Special Allowance Reserve (under subpart E of this part) for use in calendar years 2000 through 2009 will be distributed to the designated representative of each unit listed in Table 2 according to the following equation:

$$\text{Units Proceeds} = \left[\frac{\text{Unit's Deduction Table 2 Column D}}{250{,}000}\right] \times \text{Total Proceeds}$$

(3) On or after June 1, 1998, monetary proceeds from the auctions of allowances from the Special Allowance Reserve (under subpart E of this part) for use in calendar years 2000 through 2009 will be distributed to the designated representative of each unit listed in Table 2 according to the following equation:

$$\text{Unit Proceeds} = \left\lfloor \frac{\text{Unit's Deduction at Table 2 Column A}}{250{,}000} \right\rfloor \times \text{Total Proceeds}$$

(4) Monetary proceeds from the auctions of allowances from the Special Allowance Reserve (under subpart E of this part) from years of purchase from 1993 through 1998, remaining in the U.S. Treasury as a result of the surrender of allowances and return of proceeds under § 73.10(b)(3), will be distributed to the designated representative of each unit listed in Table 2 according to the following equation:

$$\text{Unit Proceeds} = \left\lfloor \frac{\text{Unit's Deduction at Table 2 Column D}}{250{,}000} \right\rfloor \times \text{Remaining Proceeds}$$

(5) Monetary proceeds from the auctions of allowances from the Special Allowance Reserve (under subpart E of this part) for use in calendar years 2010 and thereafter will be distributed to the designated representative of each unit listed in Table 2 according to the following equation:

$$\text{Unit Proceeds} = \left\lfloor \frac{\text{Unit's Deduction at Table 2 Column E}}{250{,}000} \right\rfloor \times \text{Total Proceeds}$$

(c) * * *

(2) Until June 1, 1998, allowances, for use in calendar years 2000 through 2009, remaining in the Special Allowance Reserve at the end of each year, following that year's auction (under subpart E of this part), will be reallocated to the unit's Allowance Tracking System account according to the following equation:

$$\text{Unit Allowances} = \left\lfloor \frac{\text{Unit's Deduction at Table 2 Column D}}{250{,}000} \right\rfloor \times \text{Allowances Remaining}$$

(3) On or after June 1, 1998, allowances, for use in calendar years 2000 through 2009, remaining in the Special Allowance Reserve at the end of each year, following that year's auction (under subpart E of this part), will be reallocated to the unit's Allowance Tracking System account according to the following equation:

$$\text{Unit Allowances} = \left\lfloor \frac{\text{Unit's Deduction at Table 2 Column A}}{250{,}000} \right\rfloor \times \text{Allowances Remaining}$$

(4) [Reserved]

(5) Allowances, for use in calendar years 2010 and thereafter, remaining in the Special Allowance Reserve at the end of each year, following that year's auction (under subpart E of this part), will be reallocated to the unit's Allowance Tracking System account according to the following equation:

$$\text{Unit Allowances} = \left\lfloor \frac{\text{Unit's Deduction at Table 2 Column E}}{250{,}000} \right\rfloor \times \text{Allowances Remaining}$$

* * * * *

10. Paragraph (b) of § 73.70 is revised to read as follows:

§ 73.70 Auctions.

* * * * *

(b) *Timing of the auctions.* The spot auction and the advance auction will be held on the same day, selected each year by the Administrator, but no later than March 31 of each year. The Administrator will conduct one spot auction and one advance auction in each calendar year.

* * * * *

[FR Doc. 98–25317 Filed 9–25–98; 8:45 am]

BILLING CODE 6560–50–U

federal register

Monday
September 28, 1998

Part V

Department of Transportation

Federal Aviation Administration

14 CFR 91

Airspace and Flight Operations Requirements for the Kodak Albuquerque International Balloon Fiesta; Albuquerque, NM; Final Rule

DEPARTMENT OF TRANSPORTATION

Federal Aviation Administration

14 CFR Part 91

[Docket No. 29279; SFAR No. 83]

RIN 2120–AG61

Airspace and Flight Operations Requirements for the Kodak Albuquerque International Balloon Fiesta; Albuquerque, NM

AGENCY: Federal Aviation Administration (FAA), DOT.

ACTION: Final rule.

SUMMARY: This action establishes a temporary flight restriction (TFR) area for the period of October 3 through October 11, 1998, for the upcoming Kodak Albuquerque International Balloon Fiesta (KAIBF). This TFR is necessary to manage aircraft operating in the vicinity of the KAIBF, and to prevent unsafe congestion of aircraft that are sightseeing over and around the Balloon Fiesta.

DATES: Effective Date: October 3, 1998 This rule expires October 12, 1998.

FOR FURTHER INFORMATION CONTACT: Terry Brown, Airspace and Rules Division, ATA–400, Office of Air Traffic Airspace Management, Federal Aviation Administration, 800 Independence Avenue, SW., Washington, DC 20591; telephone (202) 267–8783.

SUPPLEMENTARY INFORMATION:

Availability of Final Rules

An electronic copy of this document may be downloaded, using a modem and suitable communications software, from the FAA regulations section of the Fedworld electronic bulletin board service (telephone: 703–321–3339), *the Government Printing Office's* electronic bulletin board service (telephone: 703–321–1661), or the FAA's Aviation Rulemaking Advisory Committee Bulletin Board service (telephone: 800–322–2722 or 202–267–5948).

Internet users may reach the FAA's web page at http://www.faa.gov.avr/arm/nprm/nprm.htm or the *Government Printing Office's webpage at http://www.access.gpo.gov/nara.html for access to recently published rulemaking documents.*

Any person may obtain a copy of this final rule by submitting a request to the Federal Aviation Administration, Office of Rulemaking, ARM–1, 800 Independence Avenue, SW., Washington, DC 20591, or by calling (202) 267–9680. Communications must identify the amendment number or docket number of this final rule.

Persons interested in being placed on the mailing list for future Notices of Rulemaking and Final Rules should request from the above office a copy of Advisory Circular No. 11–2A, Notice of Rulemaking Distribution System, that describes the application procedure.

Small Entity Inquiries

The Small Business Regulatory Enforcement Fairness Act of 1996 (SBREFA) requires the FAA to report inquiries from small entities concerning information on, and advice about, compliance with statutes and regulations within the FAA's jurisdiction, including interpretation and application of the law to specific sets of facts supplied by a small entity.

If you are a small entity and have a question, contact your local FAA official. If you do not know how to contact your local FAA official, you may contact Charlene Brown, Program Analyst Staff, Office of Rulemaking, ARM–27, Federal Aviation Administration, 800 Independence Avenue, SW, Washington, DC 20591, 1–888–551–1594. Internet users can find additional information on SBREFA in the ''Quick Jump'' section of the FAA's web page at http://www.faa.gov and may send electronic inquiries to the following Internet address: 9–AWA–SBREFA@faa.dot.gov.

Background

The KAIBF will be held on October 3 through October 11, 1998, at a site 9 miles north of Albuquerque International Sunport, In Albuquerque, NM.

This SFAR establishes a TFR area to provide for the safety of persons and property in the air and on the ground during the KAIBF. The TFR area will restrict aircraft operations in a specified location; however, access to this area may be allowed with the appropriate air traffic control (ATC) authorization from the Albuquerque International Sunport Airport Traffic Control Tower (ATCT). ATC will retain the ability to manage aircraft through the TFR area in accordance with established ATC procedures.

Specifically, the TFR area will be 9 miles north of the Albuquerque International Sunport ATCT and just west of Interstate Highway 25 (I–25). The TRF area will be centered on the Albuquerque Very High Frequency Omnidirectional Range/Tactical Air Navigation (VORTAC) 038° radial 14 distance measuring equipment (DME) fix. The area will encompass a 4 nautical mile (NM) radius, extending from the surface up to but not including 8,000 feet mean sea level (MSL). The TFR area will be in effect between the hours of 0530 Mountain Daylight Time (MDT) and 1200 MDT, and from 1600 MDT until 2200 MDT on October 3 through October 11, 1998. Unauthorized aircraft will be required to remain clear of this area during these times.

The location, dimensions, and effective times of the TFR area will be published and disseminated via the Notice to Airmen (NOTAM) system.

Exceptions

This SFAR contains provisions to provide flexible, efficient management and control of air traffic. ATC will have the authority to give priority to, or exclude from the requirements of the special regulation, flight operations dealing with or containing essential military, medical emergency, rescue, law enforcement, Presidential, and heads of state.

Notice to Airmen Information

Time-critical aeronautical information that is of a temporary nature, or is not sufficiently known in advance to permit publication on aeronautical charts or in other operational publications, receives immediate dissemination via the NOTAM system. All domestic operators planning flight to the KAIBF will need to pay particular attention to NOTAM D and Flight Data Center (FDC) NOTAM information.

NOTAM D contains information on airports, runways, navigational aids, radar services, and other information essential to flight. An FDC NOTAM contains information that is regulatory in nature, such as amendments to aeronautical charts and restrictions to flight. FDC NOTAM and NOTAM D information will also be provided to international operators in the form of International NOTAMs. NOTAMs are distributed through the National Communications Center in Kansas City, MO, for transmission to all air traffic facilities having telecommunications access.

Pilots and operators will need to consult the monthly NOTAM Domestic/International publication. This publication contains NOTAM FDC and D NOTAMs. Special information, including graphics, will be published in the biweekly publication in advance of the KAIBF. For more detailed information concerning the NOTAM system, refer to the Aeronautical Information Manual ''Preflight.'' section.

Other U.S. Laws and Regulations

Aircraft operators should clearly understand that the SFAR is in addition to other laws and regulations of the U.S. The SFAR will not waive or supersede

any U.S. statute or obligation. When operating within the jurisdictional limits of the U.S., operators of foreign aircraft must conform to all applicable requirements of U.S. Federal, State, and local governments. In particular, aircraft operators planning flights into the U.S. must be aware of and conform to the rules and regulations established by the:

1. U.S. Department of Transportation regarding flights entering the U.S.;
2. U.S. Customs Service, Immigration and other authorities regarding customs, immigrations, health, firearms, and imports/exports;
3. U.S. FAA regarding flight in or into U.S. airspace. This includes compliance with Parts 91, 121 and 135 of Title 14 of the Code of Federal Regulations regarding operations into or within the U.S. through air defense identification zones, and compliance with general flight rules; and,
4. Airport management authorities regarding use of airports and airport facilities.

Discussion of Comments

A notice for proposed rulemaking (NPRM) was published in the **Federal Register** on July 15, 1998 (63 FR 38236). No comments were received regarding this proposal. Except for minor editorial changes, this amendment is being adopted as proposed in the NPRM.

Effective Date

The effective date of this rule is October 3, 1998, which coincides with the start of the KAIBF. The SFAR contains aeronautical information concerning the location, date and times that the special flight restrictions are in effect. In order for pilots and other affected entities that conduct operations in this area to be made aware immediately of the upcoming flight restrictions, the FAA finds that good cause exists pursuant to 5 U.S.C. 553(d), for making this amendment effective in less than 30 days to provide for the safety of persons and property in the air and on the ground during the KAIBF.

Environmental Effects

This action establishes a TFR area for safety purposes and curtails or limits certain aircraft operations within a designated area on defined dates and times. Additionally, this action is temporary in nature and effective only for the dates and times necessary to provide for the management of air traffic operations and the protection of participants and spectators on the ground. ATC will retain the ability to direct aircraft through the restricted area in accordance with normal traffic flows. The FAA believes the establishment of a TFR area will have minimal impact on ATC operations.

Further, this action reduces aircraft activity in the vicinity of the KAIBF by restricting aircraft operations. There will be fewer aircraft operations in the vicinity of the KAIBF than will occur if the TFR area were not in place, and noise levels associated with that greater aircraft activity will also be reduced. Additionally, aircraft avoiding the TFR area will not be routed over any particular area. This action will not, therefore, result in any long-term action that will routinely route aircraft over noise-sensitive areas. For the reasons stated above, the FAA concludes that this rule will not significantly affect the quality of the human environment.

Paperwork Reduction Act

In accordance with the Paperwork Reduction Act of 1995 (44 U.S.C. 3507(d)), there are no requirements for information collection associated with this final rule.

International Compatibility

The FAA has reviewed corresponding International Civil Aviation Organization international standards and recommended practices and Joint Aviation Airworthiness Authorities regulations, where they exist, and has identified no differences in this amendment and the foreign regulations.

Regulatory Evaluation Summary

Changes to Federal regulations must undergo several economic analyses. First, Executive Order 12866 directs that each Federal agency shall propose or adopt a regulation only upon a reasoned determination that the benefits of the intended regulation justify its costs. Second, the Regulatory Flexibility Act of 1980 requires agencies to analyze the economic effect of regulatory changes on small entities. Third, the Office of Management and Budget directs agencies to assess the effect of regulatory changes on international trade. In conducting these analyses, the FAA has determined that this rule is not ''a significant regulatory action'' as defined in the Executive Order and the Department of Transportation Regulatory Policies and Procedures. This rule will not have a significant impact on a substantial number of small entities and will not constitute a barrier to international trade.

This regulatory evaluation examined the costs and benefits of the proposed SFAR applicable for the period October 3 through October 11, 1998. The SFAR establishes a TFR area for the upcoming KAIBF to be held in Albuquerque, NM. Since the impact of the proposed change are relatively minor, this economic summary constitutes the analysis and no regulatory evaluation will be placed in the docket.

The benefits of the TFR airspace will primarily be a lowered risk of midair collisions between aircraft and balloons due to increased positive control of TFR airspace. While benefits cannot be quantified, the FAA believes the benefits are commensurate with the small costs attributed to the temporary inconvenience of the flight restrictions for operators near the TFR area.

Regulatory Flexibility Determination

The Regulatory Flexibility Act of 1980 establishes ''as a principle of regulatory insurance that agencies shall endeavor, consistent with the objective of the rule and of applicable statues, to fit regulatory and informational requirements to the scale of the business, organizations, and governmental jurisdictions subject to regulation.'' To achieve that principle, the Act requires agencies to solicit and consider flexibility regulatory proposals and to explain the rational for their actions. The Act covers a wide-range of small entities, including small businesses, not-for-profit organizations and small governmental jurisdictions.

Agencies must perform a review to determine whether a proposed or final rule will have a significant economic impact on a substantial number of small entities. If the determination is that it will, the agency must prepare a regulatory flexibility analysis (RFA) as described in the Act.

However, if an agency determines that a proposed or final rule is not expected to have a significant economic impact on a substantial number of small entities, section 605(b) of the 1980 Act provides that the head of the agency may so certify and an RFA is not required. The certification must include a statement providing the factual basis for this determination, and the reasoning should be clear.

The major economic impact, in this case, will be the inconvenience of circumnavigation to operators who may want to operate in the area of the TFR. An aircraft operator could avoid the restricted airspace by flying over it or by circumnavigating the restricted airspace. Because the possibility of such occurrences is for a limited time and the restricted areas are limited in size, the FAA believes that any circumnavigation costs will be negligible.

The FAA conducted the required review of this proposal and determined that it would not have a significant economic impact on a substantial number of small entities. As previously

stated, the major economic impact would be the inconvenience of circumnavigation to operators who may want to operate in the area of the TFR. Because the possibility of such occurrences is for a limited time and the restricted area is limited in size, the FAA believes that any costs would be negligible.

Accordingly, pursuant to the Regulatory Flexibility Act, 5 U.S.C. 605(b), the FAA certifies that this rule will not have a significant impact on a substantial number of small entities. The FAA solicits comments from affected entities with respect to this finding and determination.

International Trade Impact Analysis

The provisions of this rule will have no impact on trade for U.S. firms doing business in foreign countries and for foreign firms doing business in the United States.

Federalism Implications

The regulations herein will not have substantial direct effects on the states, on the relationship between the national government and the states, or on the distribution of power and responsibilities among the various levels of government. Therefore, in accordance with Executive Order 12612, it is determined that this rule will not have sufficient federalism implications to warrant the preparation of a Federalism Assessment.

Unfunded Mandates Reform Act

Title II of the Unfunded Mandates Reform Act of 1995 (the Act), enacted as Pub. L. 104–4 on March 22, 1995, requires each Federal agency, to the extent permitted by law, to prepare a written assessment of the effects of any Federal mandate in a proposed or final agency rule that may result in the expenditure by State, local, and tribal governments, in the aggregate, or by the private sector, of $100 million or more (adjusted annually for inflation) in any one year. Section 204(a) of the Act, 2 U.S.C. 1534(a), requires the Federal agency to develop an effective process to permit timely input by elected officers (or their designees) of State, local, and tribal governments on a ''significant intergovernmental mandate.'' A ''significant intergovernmental mandate'' under the Act is any provision in a Federal agency regulation that will impose an enforceable duty upon State, local, and tribal governments, in the aggregate, of $100 million (adjusted annually for inflation) in any one year. Section 203 of the Act, 2 U.S.C. 1533, which supplements section 204(a), provides that before establishing any regulatory requirements that might significantly or uniquely affect small governments, the agency shall have developed a plan that, among other things, provides for notice to potentially affected small governments, if any, and for a meaningful and timely opportunity to provide input in the development of regulatory proposals.

This rule does not contain a Federal intergovernmental or private sector mandate that exceeds $100 million a year.

List of Subjects in 14 CFR Part 91

Air traffic control, Aircraft, Airports, Aviation safety.

The Amendment

In consideration of the foregoing, the Federal Aviation Administration amends part 91 of Title 14, Code of Federal Regulations (14 CFR part 91) as follows:

PART 91—GENERAL OPERATING AND FLIGHT RULES

1. The authority citation for part 91 continues to read as follows:

Authority: 49 USC 106(g), 1155, 40103, 40113, 40120, 44101, 44111, 44701, 44709, 44711, 44712, 44715, 44716, 44717, 44722, 46306, 46315, 46316, 46504, 46506–46507, 47122, 47508, 47528–47531, articles 12 and 29 of the Convention on International Civil Aviation (61 stat. 1180).

2. Amend part 91 by adding Special Federal Aviation Regulation No. 83 to read as follows:

SFAR 83—Airspace and Flight Operations Requirements for the 1998 Kodak Albuquerque International Balloon Fiesta; Albuquerque, NM

1. *General.* (a) Each person shall be familiar with all NOTAMs issued pursuant to this SFAR and all other available information concerning that operation before conducting any operation into or out of an airport or area specified in this SFAR or in NOTAMs pursuant to this SFAR. In addition, each person operating an international flight that will enter the U.S. shall be familiar with any international NOTAMs issued pursuant to this SFAR. NOTAMs are available for inspection at operating FAA air traffic facilities and regional air traffic division offices.

(b) Notwithstanding any provision of the Title 14, Code of Federal Regulations, no person may operate an aircraft contrary to any restriction procedure specified in this SFAR or by the Administrator, or through a NOTAM issued pursuant to this SFAR.

(c) As conditions warrant, the Administrator is authorized to—

(1) Restrict, prohibit, or permit IFR/VFR operations in the temporary flight restricted area designated in this SFAR or in a NOTAM issued pursuant to this SFAR;

(2) Give priority to or exclude the following flights from provisions of this SFAR and NOTAMs issued pursuant to this SFAR:

(i) Essential military.

(ii) Medical and rescue.

(iii) Presidential and Vice Presidential.

(iv) Flights carrying visiting heads of state.

(v) Law enforcement and security.

(vi) Flights authorized by the Director, Air Traffic Service.

(d) For security purposes, the Administrator may issue NOTAMs during the effective period of this SFAR to cancel or modify provisions of this SFAR and NOTAMs issued pursuant to this SFAR if such action is consistent with the safe and efficient use of airspace and the safety and security of persons and property on the ground as affected by air traffic.

2. *Temporary Flight Restriction.* At the following location, flight is restricted during the indicated dates and times: That airspace within a 4 NM radius centered on the Albuquerque VORTAC 038 radial 14 DME fix from the surface up to but not including 8,000 feet MSL unless otherwise authorized by Albuquerque ATCT.

3. *Dates and Times of Designation.* (a) October 3 through October 11, 1998, from 0530 MDT until 1200 MDT.

(b) October 3 through October 11, 1998, from 1600 MDT until 2200 MDT.

4. *Expiration.* This Special Federal Aviation Regulation expires on October 12, 1998.

Issued in Washington, DC, on September 23, 1998.

Jane F. Garvey,

Administrator.

[FR Doc. 98–25848 Filed 9–23–98; 4:58 pm]

BILLING CODE 4910–13–M

federal register

Monday
September 28, 1998

Part VI

Department of Labor

Employment and Training Administration

Job Training Partnership Act: Indian and Native American Employment and Training Programs; Solicitation for Grant Application: Final Grantee Designation Procedures for Program Year 1999; Notice

DEPARTMENT OF LABOR

Employment and Training Administration

Job Training Partnership Act: Indian and Native American Employment and Training Programs; Solicitation for Grant Application: Final Grantee Designation Procedures for Program Year 1999

AGENCY: Employment and Training Administration, Department of Labor.

ACTION: Notice of final designation procedures for grantees.

SUMMARY: This document contains the procedures by which the Department of Labor (DOL) will designate potential grantees to receive a one-year grant for Indian and Native American Employment and Training Programs under the Job Training Partnership Act (JTPA). Grantees participating in the Pub. L. 102–477 Demonstration Project are exempted from competition. The designations will be for JTPA Program Year (PY) 1999 (July 1, 1999 through June 30, 2000). This notice provides the information prospective grant applicants need to submit appropriate requests for designation.

DATES: Final Notices of Intent must be postmarked (U.S. Postal Service) no later than January 1, 1999.

ADDRESS: Send an original and two copies of the Final Notices of Intent to Ms. Anna Goddard, Director, Office of National Programs, Room N-4641 FPB ATTN: MIS Desk, U.S. Department of Labor, 200 Constitution Avenue, N.W., Washington, D.C. 20210.

SUPPLEMENTARY INFORMATION: Because these designation procedures involve only the final 12-month period authorized under the Job Training Partnership Act (JTPA) (July 1, 1999—June 30, 2000), the Department of Labor (DOL) has sought to minimize disruption by applying the waiver of competition provisions of section 401(l) of JTPA. JTPA section 401 grantees who are presently operating under Pub. L. 102–477, The Indian Employment, Training, and Related Services Demonstration Act of 1992, must submit a Final Notice of Intent for redesignation under this procedure in order to maintain their service area designation and eligibility for funds under this title. They are, however, exempt from competition for the current service areas covered in their ''477 Plans'', assuming all other designation requirements continue to be met.

Job Training Partnership Act: Indian and Native American Programs; Final Designation Procedures for Program Year 1999

Table of Contents

Introduction: Scope and Purpose of Notice
I. General Designation Principles
II. Waiver Provision
III Final Notice of Intent
IV. Preferential Hierarchy for Determining Designations
V. Use of Panel Review Procedure
VI. Notification of Designation/Nondesignation
VII. Special Designation Situations
VIII. Designation Process Glossary

Introduction: Scope and Purpose of Notice

Section 401 of the Job Training Partnership Act (JTPA) authorize programs to serve the employment and training needs of Indians and Native Americans.

Requirements for these programs are set forth in the Act, and in the JTPA section 401 regulations at 20 CFR part 632. The specific organization eligibility and application requirements for designation are set forth at 20 CFR 632.10 and 632.11. Pursuant to these requirements, the Department of Labor (DOL) selects entities for funding under section 401. It designates such entities as potential Native American section 401 grantees which will be awarded grant funds contingent upon all other grant award requirements being met. This notice describes how DOL will designate potential grantees who may apply for grants for Program Year 1999.

The Final Notice of Intent (see Part III, below) is mandatory for all applicants. Any organization interested in being designated as a Native American section 401 grantee should be aware of and comply with the procedures in these parts.

The amount of JTPA section 401 funds to be awarded to designated Native American section 401 grantees is determined under procedures described at 20 CFR 632.171 and not through this designation process. The JTPA grant application process is described at 20 CFR 632.18 through 632.20.

I. General Designation Principles

Based on JTPA and applicable regulations, the following general principles are intrinsic to the designation process:

(1) All applicants for designation shall comply with the requirements found at 20 CFR part 632, subpart B, regardless of their apparent standing in the preferential hierarchy (see Part IV, Preferential Hierarchy For Determining Designations, below). The basic eligibility, application and designation requirements are found in 20 CFR part 632, subpart B.

(2) The nature of this program is such that Indians and Native Americans are entitled to program services and are best served by a responsible organization directly representing them and designated pursuant to the applicable regulations. The JTPA and the governing regulations give clear preference to Native American-controlled organizations. That preference is the basis for the steps which will be followed in designating grantees.

(3) A State or Federally-recognized tribe, band or group *on its reservation* is given absolute preference over any other organization if it has the capability to administer the program and meets all regulatory requirements. This preference generally applies only to the area within the reservation boundaries. With regard to eligibility, every attempt, consistent with law and regulation, will be made to qualify newly Federally-recognized tribes. However, pursuant to 20 CFR 632.171 and Sec. 162(a) of JTPA, Census data are still necessary to determine funding amounts.

In the event that such a tribe, band or group (including an Alaskan Native entity) is not designated to serve its reservation or geographic service area, the DOL will consult with the governing body of such entities when designating alternative service deliverers, as provided at 20 CFR 632.10(e). Such consultation may be accomplished in writing, in person, or by telephone, as time and circumstances permit. When it is necessary to select alternative service deliverers, the Grant Officer will continue to utilize input and recommendations from the Division of Indian and Native American Programs (DINAP).

(4) In designating Native American section 401 grantees for off-reservation areas not awarded to Federally-recognized tribes, DOL will provide preference to Indian and Native American-controlled organizations as described in 20 CFR 632.10(f) and as further clarified in Part VIII (1) *Indian or Native American-Controlled Organization* of this notice. As noted in (3) above, when vacancies occur, the Grant Officer will continue to utilize input and recommendations from DINAP when designating alternative service deliverers.

(5) Incumbent and non-incumbent applicants seeking additional areas must submit evidence of significant support from other employment and training or other social services organizations within the communities (geographic service areas) which they are currently

serving or requesting to serve. DOL will give particular weight to support from Native American-controlled organizations, but support from other (i.e., State and local) agencies/organizations will also be accepted. See Part III, Final Notice of Intent, below, for more details.

(6) The Grant Officer will make the designations using a two-part process:

(a) Those applicants described in Part IV (1) of the Preferential Hierarchy For Determining Designations will be designated on a noncompetitive basis *if* all pre-award clearances, responsibility reviews, and regulatory requirements are met.

(b) All applicants described in Part IV, (2), (3), and (4) of the Preferential Hierarchy For Determining Designations, which have not been granted waivers, will be *considered on a competitive basis* for such areas, and all information submitted with the Final Notice of Intent or in response to a request from the Grant Officer, as well as pre-award clearances, responsibility reviews, and all regulatory requirements will be considered in the competitive process.

(7) Special employment and training services for Indian and Native American people have been provided through an established service delivery network for the past 24 years under the authority of JTPA section 401 and its predecessor, section 302 of the repealed Comprehensive Employment and Training Act (CETA). The DOL intends to exercise its designation authority to preserve the continuity of such services and to prevent the undue fragmentation of existing geographic service areas. Consistent with the present regulations and other provisions of this notice, this will include preference for those Native American organizations with an existing capability to deliver employment and training services within an established geographic service area. Such preference will be determined through input and recommendations from the Chief of DOL's Division of Indian and Native American Programs (DINAP) and the Director of DOL's Office of National Programs (ONP), and through the use of the rating system described in this Notice. Unless a non-incumbent applicant in the same preferential hierarchy as an incumbent applicant grantee can demonstrate that it is significantly superior overall to the incumbent, the incumbent will be designated, if it otherwise meets all of the requirements for redesignation.

(8) In preparing applications for designation, applicants should bear in mind that the purpose of the JTPA, as amended, is ''to establish programs to prepare youth and adults facing serious barriers to employment for participation in the labor force by providing job training and other services that will result in increased employment and earnings, increased education and occupational skills, and decreased welfare dependency, thereby improving the quality of the work force and enhancing the productivity and competitiveness of the Nation.''

After making the initial waiver determinations, DOL's first step in the designation process is to determine which areas have more than one potential applicant for designation. This should be accomplished by January 8, 1999. For those areas for which no waiver has been granted, each such organization will be notified as soon as possible of the potential for competition, and will be apprised of the identity of the other organization(s) applying for that area. Such notification will instruct all potential competitors to submit full Notice(s) of Intent by the required postmark deadline of January 31, 1999 (see Part III, Final Notice of Intent, below).

It is DOL policy that, to the extent that compliance with the regulations permits, a geographic service area and the applicant which will operate a section 401 program in that area are to be determined by the Native American community to be served by the program. Applicants in competition should take special care with the material submitted to supplement their Final Notices of Intent to ensure that they are complete and fully responsive to all matters covered by the preferential hierarchy and rating systems discussed in this notice.

(9) Although tribes and organizations participating in the employment and training demonstration project under Pub. L. 102–477 qualify for exemption from designation competition under Sec. 401(l) of JTPA, they still must submit a Final Notice of Intent (see Section III, below) to continue to receive funds under the JTPA.

II. Waiver Provision

JTPA section 401(l) states:

> ''The competition for grants under this section shall be conducted every 2 years, except that if a recipient of such a grant has performed satisfactorily under the terms of the existing grant agreement, the Secretary may waive the requirement for such competition on receipt from the recipient of a satisfactory 2-year program plan for the succeeding 2-year grant period.''

Because of the impending expiration of JTPA, the Department is exercising this waiver authority for PY 1999. All incumbent grantees who have performed ''satisfactorily'', both programmatically and administratively, under their present grant may receive a waiver for the PY 1999 designation period. The responsibility review criteria at 20 CFR 632.11(d) of the current regulations serve as the baseline instrument to determine ''satisfactory'' performance, although other factors may be involved.

Unlike the designation procedures for PY's 1995–96, incumbent grantees will not have to request a waiver for PY 1999. The Department will determine those grantees which qualify for a waiver, and will publish this list in the **Federal Register** by November 15, 1998. Incumbent grantees, including tribes serving areas outside their reservations, which are not granted waivers will be subject to the competitive process published in this solicitation.

Incumbent grantees receiving a waiver will be required to submit only an SF–424 for their currently-designated service area(s) postmarked by January 1, 1999.

Non-incumbent applicants who qualify for Preferential Hierarchy Status 1 may apply by January 1, 1999 for and be designated to serve their Hierarchy 1 service area(s), providing these applicants are otherwise fundable.

Tribes and organizations participating in the employment and training demonstration project under Pub. L. 102–477 are automatically granted waivers, unless they have outstanding and serious unresolved issues with the Department which affect their continued JTPA designation.

III. Final Notice of Intent

Even though a waiver may be granted, all applicants must submit an original and two copies of a Final Notice of Intent (FNOI) (which may, in some instances as noted above, be only an SF–424, properly completed and signed), postmarked (by the U.S. Postal Service) not later than January 1, 1999, consistent with the regulations at 20 CFR 632.11. Final Notices of Intent may also be delivered in person not later than the close of business on the first business day of the designation year.

Final Notices of Intent are to be sent to the Chief, Division of Indian and Native American Programs (DINAP), at the address cited above.

Final Notice of Intent Contents: (As Outlined at 20 CFR 632.11)

- A completed and signed SF–424, ''Application for Federal Assistance'';
- An indication of the applicant's legal status, including articles of incorporation or consortium agreement as appropriate;

• A clear indication of the territory being applied for, by State(s), counties, and/or reservation(s);

If the Grant Officer determines that there is competition for all or part of a given service area, the following information may also be required of competing entities:

• Evidence of community support from Native American-controlled organizations, State agencies, or individuals in a position to speak to the employment and training competence of the entity; and

• Other information relating to capability, such as service plans and previous experience which the applicant feels will strengthen its case, including information on any unresolved or outstanding administrative problems.

Exclusive of charts or graphs and letters of support, the additional information submitted to augment the Notice of Intent in a situation involving competition should not exceed *75* pages of double-space unreduced type.

Incumbent and non-incumbent State and Federally-recognized tribes need not submit evidence of community support regarding their own reservations. However, such entities are required to provide such evidence for any area which they wish to serve beyond their reservation boundaries, or their Congressionally-mandated or Federally-established service areas.

As stated above, if no competition exists, the regulations permit current grantees requesting their existing geographic service areas to submit only an SF–424 in lieu of a complete application, including those grantees currently participating in the demonstration under Pub. L. 102–477 who are exempt from designation cycle competition. If competition is determined to exist, current grantees, other than tribes, bands or groups (including Alaskan Native entities) requesting their existing areas, will be instructed to submit a ''full'' Final Notice of Intent, which will include the supplementary information outlined above. If a waiver has been granted an incumbent, no further information is necessary, beyond the submission of the SF–424. Tribes, bands or groups (including Alaskan Native entities) will be asked to submit a full Final Notice of Intent if they intend to serve areas beyond their reservation boundaries.

Any organization applying by January 1, 1999, for non-contiguous geographic service areas shall prepare a separate, complete Final Notice of Intent (including the above-referenced supplementary information relating to community support and capability) for each such area unless currently designated and granted a waiver for such area(s).

It is DOL's policy that no information affecting the panel review process will be solicited or accepted past the regulatory postmarked or hand-delivered deadlines of January 1 or January 31 (see Part V, Use of Panel Review Procedure, below). All information provided before these deadlines must be in writing.

This policy does not preclude the Grant Officer from requesting additional information independent of the panel review process.

IV. Preferential Hierarchy for Determining Designation

In cases in which only one organization is applying for a clearly identified geographic service area and the organization meets the requirements at 20 CFR 632.10(b) and 632.11(d), DOL shall designate the applying organization as the grantee for the area. In cases in which two or more organizations apply for the same area (in whole or in part) and a waiver has not been granted the incumbent, and the incumbent is otherwise fundable, DOL will utilize the order of designation preference described in the hierarchy below. The higher-ranking organization will be designated, assuming all other requirements are met. The preferential hierarchy is:

(1) Indian tribes, bands or groups on Federal or State reservations for their reservation, or their Congressionally-mandated or Federally-established service area; Oklahoma Indians only as specified in Part VII, Special Designation Situations, below; and Alaskan Native entities only specified in Part VII, Special Designation Situations, below.

(2) Native American-controlled, community-based organizations as defined in Part VIII (1) of the glossary in this notice, with significant support from other Native American-controlled organizations within the service community. This includes tribes applying for geographic service areas other than their own reservations.

When a non-incumbent can demonstrate in its application, by verifiable information, that it is potentially significantly superior overall to the incumbent, and the incumbent has not been granted a waiver, a formal competitive process will be utilized which may include a panel review. Such potential will be determined by the consideration of such factors as the following: completeness of the application and quality of the contents; documentation of relevant experience; Native American-controlled organizational support; understanding of area training and employment needs and approach to addressing such needs; and the capability of the incumbent. If there is no incumbent, new applicants qualified for this category would compete against each other.

(3) Organizations (private nonprofit or units of State or local governments) having significant Native American control, such as a governing body or administration chaired or headed by a Native American and having a majority membership of Native Americans.

(4) Non-Native American-controlled organizations. In the event such an organization is designated, it must develop a Native American advisory process as a condition for the award of a grant.

The Chief, DINAP, will make determinations regarding hierarchy, geographic service areas, eligibility of new applicants and the timeliness of submissions. He may convene a task force to assist in making such determinations. The role of the task force is that of a technical advisory body.

The Chief, DINAP, will ultimately advise the Grant Officer in reference to which position an organization holds in the designation hierarchy. Within the regulatory time constraints of the designated process, the Chief, DINAP, will utilize whatever information is available.

The applying organization must supply sufficient information to permit the determination to be made. Organizations must indicate the category which they assume is appropriate and must adequately support that assertion.

V. Use of Panel Review Procedure

A formal competitive process may be utilized under the following circumstances:

(1) The Chief, DINAP, advises that a new applicant qualified for the second category of the hierarchy appears to be potentially significantly superior overall to an incumbent Native American-controlled, community-based organization (which has not been granted a waiver) with significant local Native American community support.

(2) The Chief, DINAP, advises that more than one new applicant is qualified for the second category of the hierarchy, and the incumbent grantee has not reapplied for designation.

(3) The Chief, DINAP, advises that two or more organizations have equal status in the third or fourth categories of the hierarchy, when there are no

applicants qualified for the first and second categories.

When competition occurs, the Grant Officer may convene a review panel of Federal Officials to score the information submitted with the Final Notice of Intent. The purpose of the panel is to evaluate an organization's capability, *based on its application*, to serve the area in question. The panel will be provided only the information described at 20 CFR 632.11 and submitted with the ''full'' Final Notice of Intent by the deadline of January 31, 1999. The panel will not give weight to undocumented assertions. Any information must be supported by adequate and verifiable documentation, e.g., supporting references must contain the name of the contact person, an address and telephone number.

The factors listed below will be considered in evaluating the capability of the applicant. In providing additional information to supplement the Final Notice of Intent, the applicant should organize his documentation of capability to correspond with these factors.

(1) Operational Capability—40 points. (20 CFR 632.10 and 632.11)

(a) Previous experience in successfully operating an employment and training program serving Indians and Native Americans of a scope comparable to that which the organization would operate if designated—20 points.

(b) Previous experience in operating other human resources development programs serving Indians or Native Americans or coordinating employment and training services with such programs—10 points.

(c) Ability to maintain continuity of services to Indian or Native American participants with those previously provided under JTPA—10 points.

(2) Identification of the training and employment problems and needs in the requested area and approach to addressing such problems and needs—20 points. (20 CFR 632.2)

(3) Planning Process—20 points. (20 CFR 632.11)

(a) Private sector involvement—10 points.

(b) Community support as defined in Part VIII (1), Designation Process Glossary, and documentation as provided in Part I (5), General Designation Principles—10 points.

(4) Administrative Capability—20 points. (20 CFR 632.11)

(a) Previous experience in administering public funds under DOL or similar administrative requirements—15 points.

(b) Experience of senior management staff to be responsible for a DOL grant—5 points.

VI. Notification of Designation/Nondesignation

The Grant Officer will make the final designation decision giving consideration to the following factors: The review panel's recommendation, in those instances where a panel is convened; input from DINAP, the Office of National Programs, the DOL Employment and Training Administration's Office of Grant and Contracts Management and Office of Management Services, and the DOL Office of the Inspector General; and any other available information regarding the organization's financial and operational capability, and responsibility. The Grant Officer will make decisions by March 1, 1999, and will provide them to all applicants as follows:

(1) *Designation Letter.* The designation letter signed by the Grant Officer will serve as official notice of an organization's designation. The letter will include the geographic service area for which the designation is made. It should be noted that the Grant Officer is not required to adhere to the geographical service area requested in the Final Notice of Intent. The Grant Officer may make the designation applicable to all of the area requested, a portion of the area requested, or if acceptable to the designee, more than the area requested.

(2) *Conditional Designation Letter.* Conditional designations will include the nature of the conditions, the actions required to be finally designated and the time frame for such actions to be accomplished.

(3) *Nondesignation Letter.* Any organization not designated, in whole or in part, for a geographic service area requested will be notified formally of the NONDESIGNATION and given the basic reasons for the determination. An applicant for designation which is refused such designation, in whole or in part, may file a Petition for Reconsideration in accordance with 20 CFR 632.13, and subsequently, may appeal the NONDESIGNATION to an administrative law judge under the provisions of 20 CFR part 636.

If an area is not designated for service through the foregoing process, alternative arrangements for service will be made in accordance with 20 CFR 632.12.

VII. Special Designation Situations

(1) *Alaskan Native Entities.* DOL has established geographic service areas for Alaskan Native employment and training based on the following: (a) The boundaries of the regions defined in the Alaskan Native Claims Settlement Act (ANCSA); (b) the boundaries of major subregional areas where the primary provider of human resource development related services is an Indian Reorganization Act (IRA)-recognized tribal council; and (c) the boundaries of the one Federal reservation in the State. Within these established geographic service areas, DOL will designate the primary Alaskan Native-controlled human resource development services provider or an entity formally designated by such provider. In the past, these entities have been regional nonprofit corporations, IRA-recognized tribal councils, and the tribal government of the Metlakatla Indian Community. DOL intends to follow these principles in designating Native American grantees in Alaska for Program Year 1999.

(2) *Oklahoma Indians.* DOL has established a service delivery system for Indian employment and training programs in Oklahoma based on a preference for Oklahoma Indians to serve portions of the State. Generally, geographic service areas have been designated geographically as countywide areas. In cases in which a significant portion of the land area of an individual county lies within the traditional jurisdiction(s) of more than one tribal government, the service area has been subdivided to a certain extent on the basis of tribal identification information contained in the most recent Federal Decennial Census of Population. Wherever possible, arrangements mutually satisfactory to grantees in adjoining or overlapping geographic service areas have been honored by DOL. DOL intends to follow these principles in designating Native American grantees in Oklahoma for Program Year 1999, to preserve continuity and prevent unnecessary fragmentation.

VIII. Designation Process Glossary

In order to ensure that all interested parties have the same understanding of the process, the following definitions are provided:

(1) *Indian or Native American-Controlled Organization.* This is defined as any organization with a governing board, more than 50 percent of whose members are Indians or Native Americans. Such an organization can be a tribal government, Native Alaskan or Native Hawaiian entity, consortium, or public or private nonprofit agency. For the purpose of hierarchy determinations, the governing board

must have decision-making authority for the section 401 program.

(2) *Service Area.* This is defined as the geographic area described as States, counties, and/or reservations for which a designation is made. In some cases, it will also show the specific population to be served. The service area is defined by the Grant Officer in the formal designation letter. Grantees must ensure that all eligible population members have equitable access to employment and training services within the service area.

(3) *Community Support.* This is evidence of active participation and/or endorsement from employment and training and/or related public service organizations within the geographic service area for which designation is requested. Priority will be given to Indian or Native American-controlled organizations within the geographic service area for which designation is requested, although applicants are not precluded from submitting attestations of support from individuals, the business community, State and local government offices, and community organizations that are not Indian or Native American-controlled. All such endorsements submitted as ''community support'' should address the employment and training/social services capability of the organization. Other support, such as that concerning cultural or social functions, would not meet DOL's definitional criteria for community support.

Signed at Washington, D.C., this 22nd day of September, 1998.

Anna W. Goddard,

Director, Office of National Programs.

E. Fred Tello,

Grant Officer, Office of Grants and Contracts Management, Division of Acquisition and Assistance.

[FR Doc. 98–25843 Filed 9–25–98; 8:45 am]

BILLING CODE 4510–30–P

Reader Aids

Federal Register

Vol. 63, No. 187

Monday, September 28, 1998

CUSTOMER SERVICE AND INFORMATION

Federal Register/Code of Federal Regulations

General Information, indexes and other finding aids	**202–523–5227**
Laws	**523–5227**
Presidential Documents	
Executive orders and proclamations	**523–5227**
The United States Government Manual	**523–5227**
Other Services	
Electronic and on-line services (voice)	**523–4534**
Privacy Act Compilation	**523–3187**
Public Laws Update Service (numbers, dates, etc.)	**523–6641**
TTY for the deaf-and-hard-of-hearing	**523–5229**

ELECTRONIC RESEARCH

World Wide Web

Full text of the daily Federal Register, CFR and other publications:

http://www.access.gpo.gov/nara

Federal Register information and research tools, including Public Inspection List, indexes, and links to GPO Access:

http://www.nara.gov/fedreg

E-mail

PENS (Public Law Electronic Notification Service) is an E-mail service that delivers information about recently enacted Public Laws. To subscribe, send E-mail to

listproc@lucky.fed.gov

with the text message:

subscribe publaws-l <firstname> <lastname>

Use listproc@lucky.fed.gov only to subscribe or unsubscribe to PENS. We cannot respond to specific inquiries at that address.

Reference questions. Send questions and comments about the Federal Register system to:

info@fedreg.nara.gov

The Federal Register staff cannot interpret specific documents or regulations.

FEDERAL REGISTER PAGES AND DATES, SEPTEMBER

46385–46628 1
46629–46860 2
46861–47126 3
47127–47418 4
47419–48080 8
48081–48416 9
48417–48570 10
48571–48994 11
48995–49262 14
49263–49410 15
49411–49652 16
49653–49818 17
49819–50126 18
50127–50460 21
50461–50742 22
50743–50964 23
50965–51268 24
51269–51510 25
51511–51776 28

CFR PARTS AFFECTED DURING SEPTEMBER

At the end of each month, the Office of the Federal Register publishes separately a List of CFR Sections Affected (LSA), which lists parts and sections affected by documents published since the revision date of each title.

3 CFR

Proclamations:
7118 49261
7119 49263
7120 49411
7121 49813
7122 49817
7123 50449
7124 50459
7125 50739
7126 50743

Executive Orders:
5327 (See Bureau of Land Management notice) 46803
12843 (See EO 13101) 49643
12845 (See EO 13101) 49643
12856 (See EO 13101) 49643
12865 (See Notice of September 23, 1998) 51509
12873 (Revoked by EO 13101) 49643
12902 (See EO 13101) 49643
12969 (See EO 13101) 49643
13031 (See EO 13101) 49643
13069 (See Notice of September 23, 1998) 51509
13098 (See Notice of September 23, 1998) 51509
13101 49643

Administrative Orders:

Presidential Determinations:
No. 98–34 of September 9, 1998 50453
No. 98–35 of September 11, 1998 50455
Notice of September 23, 1998 51509

5 CFR

Proposed Rules:
2424 48130

7 CFR

52 50745
301 ..... 47127, 50747
319 ..... 50100, 50747
354 50100
406 50965
457 ..... 50752, 50965
905 ..... 46629, 51511
916 50461
917 50461
920 46861
924 46631
927 46633
953 46635
955 51269
981 48995
1106 46866
1160 46637
1306 46385

Proposed Rules:
319 46403
400 46703
457 46706
905 46708
956 50802
1079 49042
1150 50178
1160 50540
1220 47200
1726 49503
1755 ..... 49504, 51018
1980 51462

8 CFR

3 51518
286 51271

Proposed Rules:
3 ..... 47205, 49043
104 46511
236 47205
240 47205
241 47205

9 CFR

1 47128
3 47128
51 47419
93 49819
381 48958

Proposed Rules:
78 49670
201 48450
381 48961
441 48961

10 CFR

20 50127
30 50465
50 50465
73 49413
430 48038
711 48060

Proposed Rules:
2 48644
36 49298
50 50815
51 48644
60 47440
70 51545
72 49046
73 49505

76 49301
140 50815
430 ....48451, 51304

11 CFR

Proposed Rules:
102 48452
103 48452
106 48452

12 CFR

3 ....46518, 48571
208 ....46518, 48571
225 ....46518, 48571
325 ....46518, 48571
563 51272
563f 51272
567 ....46518, 48571
574 51272
611 49265
615 49265
620 49265
627 49265

Proposed Rules:
404 48452
545 49874
560 49874
561 51305
611 49305
620 49305
701 49164
1780 51031

13 CFR

121 46640
123 ....46643, 46644
125 46640

14 CFR

39 ....46645, 46647, 46868, 46870, 46872, 46873, 46875, 46876, 46878, 47091, 47423, 48417, 48418, 48421, 48422, 48423, 48425, 48571, 48573, 48997, 49265, 49267, 49269, 49272, 49273, 49275, 49278, 49280, 49414, 49416, 49418, 49420, 49421, 49423, 49653, 49654, 49656, 49657, 49659, 49661, 49819, 50129, 50130, 50132, 50134, 50135, 50138, 50482, 50484, 50485, 50487, 50490, 50492, 50493, 50495, 50498, 50500, 50501, 50503, 50505, 50506, 50508, 50511, 50512, 50514, 50753, 50755, 50979, 50981, 50983, 50986, 50990, 51275, 51277, 51279, 51281, 51520, 51525
71 ....46511, 46880, 47091, 47151, 47152, 47153, 47155, 48081, 48427, 48575, 49281, 49282, 49283, 49284, 50139, 50140, 50142, 50992, 51282
73 46648
91 51768
95 46650
97 ....48998, 48999, 49001
107 51204
108 51204

Proposed Rules:
21 46834
27 46834
29 46834
39 ....46711, 46712, 46714, 46924, 46925, 46927, 46932, 46934, 47440, 47443, 47445, 47447, 48138, 48140, 48141, 48653, 48655, 49048, 49050, 49307, 49309, 49673, 49675, 49677, 49679, 49877, 49879, 49881, 50174, 50540, 51045, 51545
71 ....46936, 48143, 49052, 51306
91 ....46834, 51048
119 51048
121 51048
125 51048
135 51048

15 CFR

14 47155
280 51525
303 49666
732 50516
734 50516
736 49425
740 50516
742 50516
743 50516
748 50516
750 50516
752 50516
770 50516
772 50516
774 50516

Proposed Rules:
295 51307

17 CFR

1 ....49955, 51124
240 ....46881, 50622

Proposed Rules:
1 49883
3 51048
17 49883
18 49883
30 51051
34 49681
35 49681
150 49883
201 46716
240 47209

18 CFR

Proposed Rules:
161 51547
250 51547
284 51547
292 51310
385 51312
1301 47448

19 CFR

4 51283
10 51291
18 51283
122 51283
123 51283
127 51283
133 51296
148 51283
178 ....51283, 51291
192 51283

21 CFR

2 51297
3 48576
5 ....48576, 51299
10 ....48576, 50757
16 48576
25 48576
50 48576
56 48576
58 48576
71 48576
73 51299
101 48428
175 51527
178 49284
179 46388
200 48576
201 48576
207 48576
210 48576
211 48576
310 48576
312 48576
314 48576
358 46389
369 48576
429 48576
430 48576
431 48576
432 48576
433 48576
436 48576
440 48576
441 48576
442 48576
443 48576
444 48576
446 48576
448 48576
449 48576
450 48576
452 48576
453 48576
455 48576
460 48576
520 ....46652, 51300
522 ....46652, 49002
556 49002
558 ....46389, 48576
800 48576
801 50660
812 48576
884 48428

Proposed Rules:
2 51322
3 46718
5 46718
10 ....46718, 50815
20 46718
207 46718
310 46718
312 46718
316 46718
600 46718
601 46718
607 46718
610 46718
640 46718
660 46718
1300 49506
1310 49506

22 CFR

41 48577
42 48577

Proposed Rules:
201 49682

23 CFR

1225 46881
1340 46389

24 CFR

5 ....46566, 46582
50 48988
200 46582
207 46566
236 46582
266 ....46566, 46582
320 51250
401 ....48926, 50527
402 ....48926, 50527
570 48437
880 ....46566, 46582
881 46566
882 46566
883 46566
884 46566
886 ....46566, 46582
888 51224
891 46566
901 46596
902 46596
965 46566
982 46582
983 46566
985 48548
1005 48988

26 CFR

1 ....47172, 50143, 50757

Proposed Rules:
1 ....46937, 47214, 47455, 48144, 48148, 48154, 50816
31 50819

27 CFR

Proposed Rules:
4 49883
9 48658

28 CFR

0 51518
16 51300
33 50759
92 50145

29 CFR

406 46887
408 46887
1910 50712
2520 48372
4044 49285

Proposed Rules:
2510 50542
2520 48376
2560 48390

30 CFR

21 47118
24 47118
75 ....47118, 50993
250 48578
253 48578
904 49427
917 47091
934 49430

Proposed Rules:
26 47120
29 47120
57 47120
70 47123
71 47123
75 47120
90 47123
707 46951
874 46951

904 48661
920 50176
934 50177
938 51324

31 CFR

103 50147
208 51494
357 50159

32 CFR

199 48439
234 49003

33 CFR

100 ....47425, 48578, 49004, 50160
117 ....47174, 47426, 47427, 49286, 49287, 49883, 51300
165 ....46652, 46888, 46889, 46890, 46891, 47428, 49883

Proposed Rules:

100 50179
117 ....48453, 50821
165 47455

34 CFR

Proposed Rules:

674 49798
682 49798

36 CFR

242 46394
1192 51694

Proposed Rules:

1 49312
3 49312
1001 50024
1002 50024
1003 50024
1004 50024
1005 50024
1006 50024
1007 50024
1008 50024
1009 50024

37 CFR

1 ....47891, 48448
2 48081
3 48081
253 49823

Proposed Rules:

201 47215

38 CFR

3 50993
17 48100

Proposed Rules:

1 48455
2 48455

39 CFR

241 46654

Proposed Rules:

111 46719
501 4628
502 ....46719, 46728
3001 ....46732, 47456

40 CFR

Ch. I 48792
9 ....48806, 48819, 50280
52 ....46658, 46659, 46662, 46664, 46892, 46894, 47174, 47179, 47429, 47431, 47434, 48106, 49005, 49434, 49436, 50762, 50764, 50766
59 ....48806, 48819, 48849
60 ....49382, 49442, 50162, 50163
62 47436
63 ....46526, 49455, 50280
69 49459
70 50769
73 51706
80 49459
136 50388
141 47098
142 48076
143 47098
180 ....48109, 48113, 48116, 48579, 48586, 48594, 48597, 48607, 49466, 49469, 49472, 49479, 49837, 50773, 50784, 51302
185 48597
264 49384
265 49384
268 ....48124, 51254
271 ....49852, 50528, 50531, 51254
281 51528
300 ....48448, 49855, 51529, 51530
439 50388
721 48157
745 46668

Proposed Rules:

51 46952
52 ....46732, 46733, 46942, 47217, 47217, 47458, 47459, 49053, 49056, 49058, 49517, 50180, 50823, 50824, 51325
60 50824
62 47459
63 48890
80 49317
86 ....48464, 48664
135 48078
141 47115
143 47115
180 48664
271 ....49884, 50545
300 49321
442 50545
721 ....48127, 49518
745 46734

41 CFR

301 47438

42 CFR

1000 46676
1001 46676
1002 46676
1005 46676

Proposed Rules:

5 46538
51c 46538
405 50545
409 47552
410 ....47552, 50545
411 47552
412 47552
413 ....47552, 50545
414 50545
415 50545
419 47552
424 50545
485 50545
489 47552
498 47552
1001 46736
1002 46736
1003 ....46736, 47552

43 CFR

2560 51303

Proposed Rules:

414 50183

44 CFR

64 ....49288, 51531
65 ....49860, 49867
67 49862

Proposed Rules:

67 49884

45 CFR

670 50164

Proposed Rules:

284 50837
286 50848
287 50848
1207 46954
1208 46963
1209 46972
1355 50058
1356 50058
1700 51533
2551 46954
2552 46963
2553 46972

46 CFR

502 50534
503 50534
510 50534
514 50534
540 50534
572 50534
585 50534
587 50534
588 50534

Proposed Rules:

197 50848
249 ....47217, 49161, 50849

47 CFR

Ch. I 47460
1 ....47438, 48615, 50791
2 50538
21 49870
24 50791
54 48634
69 ....48634, 49869
73 ....48615, 49291, 49487, 49667, 49870, 50995
74 48615
78 49870
80 49870
90 49291

Proposed Rules:

15 ....50184, 50185
18 50547
61 49520
63 49520
69 49520
73 ....46978, 46979, 49323, 49682, 49683, 49684
97 49059

48 CFR

246 47439
1504 46898
1542 46898
1552 46898

Proposed Rules:

1 51642
5 51642
6 51642
9 51642
12 51642
13 51642
14 51642
15 51642
16 48416
17 51642
25 51642
52 51642
232 47460
252 47460
1509 49530
1552 49530

49 CFR

37 51670
38 51694
172 48566
173 48566
174 48566
175 48566
176 48566
177 48566
195 46692
213 ....49382, 51638
571 ....46899, 50995
593 51534
1002 46394
1182 46394
1187 36394
1188 46394

Proposed Rules:

171 46844
172 46844
173 46844
178 46844
229 48294
230 51404
231 48294
232 48294
240 50626
571 49891
572 ....46979, 49981
585 49958
587 49958
595 ....49958, 51547

50 CFR

17 ....46900, 48634, 49006, 49022, 51005
20 ....36399, 50170
32 46910
100 46394
226 46693
227 49035
285 ....48641, 49296, 49668, 49873
660 46701
679 ....47461, 48634, 49296, 49668, 50170, 50801, 51303

Proposed Rules:
17 .....48162, 48165, 48166, 49062, 49063, 49065, 49539, 50187, 50547, 50850, 51329
227.....50187
229.....48670
622.....47461
648 .....47218, 48167, 48168, 48465
679 .....46993, 47218, 49540, 49892

REMINDERS

The items in this list were editorially compiled as an aid to Federal Register users. Inclusion or exclusion from this list has no legal significance.

RULES GOING INTO EFFECT SEPTEMBER 28, 1998

AGRICULTURE DEPARTMENT

Agricultural Marketing Service

Onions (Vidalia) grown in—
Georgia; published 9-25-98

COMMERCE DEPARTMENT

National Institute of Standards and Technology

Fastener Quality Act; implementation; published 9-28-98

COMMERCE DEPARTMENT

National Oceanic and Atmospheric Administration

Fishery conservation and management:
Northeastern United States fisheries—
Atlantic sea scallop; published 9-29-98

COMMODITY FUTURES TRADING COMMISSION

Commodity Exchange Act:
Futures commission merchants and introducing brokers; minimum financial requirements maintenance; published 8-27-98

DEFENSE DEPARTMENT

Vocational rehabilitation and education:
Veterans education—
Education benefits election; published 8-27-98

ENVIRONMENTAL PROTECTION AGENCY

Air programs; approval and promulgation; State plans for designated facilities and pollutants:
Colorado; published 7-29-98

Air quality implementation plans; approval and promulgation; various States:
Missouri; published 8-27-98

Superfund program:
National oil and hazardous substances contingency plan—
National priorities list update; published 9-28-98
National priorities list update; published 9-28-98

Toxic substances:
Significant new uses—
2-substituted benzotriazole, etc.; published 8-28-98

FEDERAL COMMUNICATIONS COMMISSION

Common carrier services:
Local telephone company facilities; expanded interconnection; published 8-28-98

Radio services, special:
Private land mobile services—
Vehicle monitoring systems; published 7-30-98

Radio stations; table of assignments:
Florida; published 8-24-98
New York; published 8-20-98
Virginia; published 8-24-98

HEALTH AND HUMAN SERVICES DEPARTMENT

Food and Drug Administration

Food additives:
Adhesive coatings and components—
2-hydroxy-1-[4-(2-hydroxyethoxy)phenyl]-2-methyl-1-propanone; published 9-28-98

HOUSING AND URBAN DEVELOPMENT DEPARTMENT

Public and Indian housing:
Replacement housing factor in modernization funding; published 8-28-98

LIBRARIES AND INFORMATION SCIENCE, NATIONAL COMMISSION

National Commission on Libraries and Information Science

Organization, functions, and authority delegations:
Technical amendments; published 9-28-98

TRANSPORTATION DEPARTMENT

Coast Guard

Vocational rehabilitation and education:
Veterans education—
Education benefits election; published 8-27-98

TRANSPORTATION DEPARTMENT

Federal Aviation Administration

Airworthiness directives:
CFM International; published 9-11-98
Textron Lycoming; published 9-11-98

TRANSPORTATION DEPARTMENT

National Highway Traffic Safety Administration

Motor vehicle safety standards:
Nonconforming vehicles—
Importation eligibility; determinations; list; published 9-28-98

TREASURY DEPARTMENT

Fiscal Service

Federal claims collection:
Collection of delinquent nontax debt owed to Federal Government; tax refund and administrative offset programs merged; published 8-28-98
Past-due support; collection by administrative offset; published 8-28-98

VETERANS AFFAIRS DEPARTMENT

Vocational rehabilitation and education:
Veterans education—
Education benefits election; published 8-27-98

COMMENTS DUE NEXT WEEK

AGRICULTURE DEPARTMENT

Agricultural Marketing Service

Dairy promotion and research order; comments due by 10-5-98; published 9-21-98

Nectarines and peaches grown in—
California; comments due by 10-7-98; published 9-22-98

Oranges, grapefruit, tangerines, and tangelos grown in—
Florida; comments due by 10-8-98; published 9-28-98

AGRICULTURE DEPARTMENT

Animal and Plant Health Inspection Service

Exportation and importation of animals and animal products:
Harry S Truman Animal Import Center; closure; comments due by 10-9-98; published 8-10-98

COMMERCE DEPARTMENT

Census Bureau

Foreign trade statistics:
Shipper's export declaration; exporters' and forwarding agents' responsibilities for providing and reporting information, etc.; clarification; comments due by 10-5-98; published 8-6-98

COMMERCE DEPARTMENT

National Oceanic and Atmospheric Administration

Fishery conservation and management:
Alaska; fisheries of Exclusive Economic Zone—
Groundfish observer program; comments due by 10-8-98; published 9-8-98
Western Alaska community development quota program; comments due by 10-5-98; published 8-5-98
Northeastern United States fisheries—
Scallop; comments due by 10-9-98; published 9-9-98

Marine mammals:
Incidental taking—
North Atlantic Energy Service Corp.; power plant operations; harbor seals; comments due by 10-9-98; published 8-25-98

COMMODITY FUTURES TRADING COMMISSION

Foreign futures and options transactions:
Foreign boards of trade; computer terminals placement in United States; concept release; comments due by 10-7-98; published 9-24-98

ENERGY DEPARTMENT

Federal Energy Regulatory Commission

Investigations:
Complaint procedures; comments due by 10-5-98; published 8-6-98

ENVIRONMENTAL PROTECTION AGENCY

Air pollutants, hazardous; national emission standards:
Ferroalloys production; comments due by 10-5-98; published 8-4-98

Air programs:
Ambient air quality standards, national—
Regional haze standards for class I Federal areas (large national parks and wilderness areas); visibility

protection program; data availability; comments due by 10-5-98; published 9-3-98

Air programs; approval and promulgation; State plans for designated facilities and pollutants:

Virginia; comments due by 10-8-98; published 9-8-98

Air quality implementation plans; approval and promulgation; various States:

California; comments due by 10-5-98; published 9-3-98

Illinois; comments due by 10-8-98; published 9-8-98

Kentucky; comments due by 10-5-98; published 9-3-98

Louisiana; comments due by 10-8-98; published 9-8-98

Maryland; comments due by 10-5-98; published 9-4-98

Armed Forces vessels; uniform national discharge standards; comments due by 10-9-98; published 8-25-98

Pesticides; tolerances in food, animal feeds, and raw agricultural commodities:

Flutolanil; comments due by 10-6-98; published 8-7-98

Toxic substances:

Significant new uses—

Phenol, 2,4-dimethyl-6-(1-methylpentadecyl), etc.; comments due by 10-9-98; published 9-9-98

FEDERAL COMMUNICATIONS COMMISSION

Radio stations; table of assignments:

North Carolina; comments due by 10-5-98; published 8-20-98

Washington; comments due by 10-5-98; published 8-20-98

Wyoming; comments due by 10-5-98; published 8-20-98

GOVERNMENT ETHICS OFFICE

Standards of ethical conduct for executive branch employees; comments due by 10-5-98; published 8-4-98

HEALTH AND HUMAN SERVICES DEPARTMENT

Food and Drug Administration

Food for human consumption:

Food labeling—

Health claims (9 documents); comment period reopening; comments due by 10-8-98; published 9-10-98

HEALTH AND HUMAN SERVICES DEPARTMENT

Health Care Financing Administration

Medicaid:

Personal Responsibility and Work Opportunity Reconciliation Act of 1996; implementation—

Unemployed parent; definition revision; comments due by 10-6-98; published 8-7-98

INTERIOR DEPARTMENT

Fish and Wildlife Service

Endangered and threatened species:

Bull trout; Coastal-Puget Sound, Jarbridge River, and St. Mary-Belly River populations; comments due by 10-8-98; published 6-10-98

Keck's checker-mallow; comments due by 10-5-98; published 8-19-98

JUSTICE DEPARTMENT

Immigration and Naturalization Service

Immigration:

Aliens—

Public benefits; eligibility verification; comments due by 10-5-98; published 8-4-98

LABOR DEPARTMENT

Mine Safety and Health Administration

Coal mine safety and health:

Underground coal mines—

Diesel particulate matter exposure of miners; comments due by 10-9-98; published 8-5-98

NATIONAL AERONAUTICS AND SPACE ADMINISTRATION

Acquisition regulations:

Reportable item; definition; comments due by 10-9-98; published 8-13-98

NATIONAL CREDIT UNION ADMINISTRATION

Credit unions:

Organization and operations—

Purchase of member's principal residence; assumption of member's long-term residential real estate loan by nonmember; comments due by 10-5-98; published 8-6-98

Real estate loan purchases; purchase, sale, and pledge of eligible obligations; requirements; comments due by 10-5-98; published 8-6-98

NUCLEAR REGULATORY COMMISSION

Independent storage of spent nuclear fuel and high-level radioactive waste; licensing requirements:

Holders of and applicants for certificates of compliance and their contractors and subcontractors; expanded applicability; comments due by 10-6-98; published 7-23-98

PERSONNEL MANAGEMENT OFFICE

Employment:

District of Columbia Corrections Department; displaced employees; priority consideration program; comments due by 10-5-98; published 8-4-98

SOCIAL SECURITY ADMINISTRATION

Supplemental security income:

Personal Responsibility and Work Opportunity Reconciliation Act of 1996; implementation—

Benefits application effective date; comments due by 10-9-98; published 8-10-98

TENNESSEE VALLEY AUTHORITY

Freedom of Information Act; implementation; comments due by 10-8-98; published 9-8-98

TRANSPORTATION DEPARTMENT

Coast Guard

Anchorage regulations:

New York; comments due by 10-8-98; published 7-10-98

TRANSPORTATION DEPARTMENT

Federal Aviation Administration

Airworthiness directives:

de Havilland; comments due by 10-5-98; published 9-3-98

Boeing; comments due by 10-6-98; published 8-7-98

British Aerospace; comments due by 10-8-98; published 9-8-98

Burkhart GROB Luft-und Raumfahrt GmbH; comments due by 10-6-98; published 9-2-98

Cessna; comments due by 10-6-98; published 8-7-98

de Havilland; comments due by 10-5-98; published 7-7-98

Dornier; comments due by 10-5-98; published 9-3-98

Empresa Brasileira de Aeronautica S.A.; comments due by 10-5-98; published 9-3-98

Learjet; comments due by 10-6-98; published 8-7-98

Lockheed; comments due by 10-5-98; published 8-19-98

Class B airspace; comments due by 10-5-98; published 8-5-98

Class E airspace; comments due by 10-5-98; published 9-4-98

TRANSPORTATION DEPARTMENT

Federal Highway Administration

Motor carrier safety standards:

Vehicles designed or used to transport more than eight passengers, including driver, for compensation; commercial motor vehicle definition; comments due by 10-5-98; published 8-5-98

TRANSPORTATION DEPARTMENT

National Highway Traffic Safety Administration

Consumer information:

Uniform tire quality grading standards; comments due by 10-5-98; published 8-4-98

Motor vehicle safety standards:

Lamps, reflective devices, and associated equipment—

Light emitting diodes and miniature halogen bulbs; comments due by 10-9-98; published 8-3-98

CFR CHECKLIST

This checklist, prepared by the Office of the Federal Register, is published weekly. It is arranged in the order of CFR titles, stock numbers, prices, and revision dates.

An asterisk (*) precedes each entry that has been issued since last week and which is now available for sale at the Government Printing Office.

A checklist of current CFR volumes comprising a complete CFR set, also appears in the latest issue of the LSA (List of CFR Sections Affected), which is revised monthly.

The CFR is available free on-line through the Government Printing Office's GPO Access Service at http://www.access.gpo.gov/nara/cfr/index.html. For information about GPO Access call the GPO User Support Team at 1-888-293-6498 (toll free) or 202-512-1530.

The annual rate for subscription to all revised paper volumes is $951.00 domestic, $237.75 additional for foreign mailing.

Mail orders to the Superintendent of Documents, Attn: New Orders, P.O. Box 371954, Pittsburgh, PA 15250–7954. All orders must be accompanied by remittance (check, money order, GPO Deposit Account, VISA, Master Card, or Discover). Charge orders may be telephoned to the GPO Order Desk, Monday through Friday, at **(202) 512–1800** from 8:00 a.m. to 4:00 p.m. eastern time, or FAX your charge orders to **(202) 512-2250**.

Title	Stock Number	Price	Revision Date
1, 2 (2 Reserved)	(869–034–00001–1)	5.00	[5] Jan. 1, 1998
3 (1997 Compilation and Parts 100 and 101)	(869–034–00002–9)	19.00	[1] Jan. 1, 1998
4	(869–034–00003–7)	7.00	[5] Jan. 1, 1998
5 Parts:			
1–699	(869–034–00004–5)	35.00	Jan. 1, 1998
700–1199	(869–034–00005–3)	26.00	Jan. 1, 1998
1200–End, 6 (6 Reserved)	(869–034–00006–1)	39.00	Jan. 1, 1998
7 Parts:			
1–26	(869–034–00007–0)	24.00	Jan. 1, 1998
27–52	(869–034–00008–8)	30.00	Jan. 1, 1998
53–209	(869–034–00009–6)	20.00	Jan. 1, 1998
210–299	(869–034–00010–0)	44.00	Jan. 1, 1998
300–399	(869–034–00011–8)	24.00	Jan. 1, 1998
400–699	(869–034–00012–6)	33.00	Jan. 1, 1998
700–899	(869–034–00013–4)	30.00	Jan. 1, 1998
900–999	(869–034–00014–2)	39.00	Jan. 1, 1998
1000–1199	(869–034–00015–1)	44.00	Jan. 1, 1998
1200–1599	(869–034–00016–9)	34.00	Jan. 1, 1998
1600–1899	(869–034–00017–7)	58.00	Jan. 1, 1998
1900–1939	(869–034–00018–5)	18.00	Jan. 1, 1998
1940–1949	(869–034–00019–3)	33.00	Jan. 1, 1998
1950–1999	(869–034–00020–7)	40.00	Jan. 1, 1998
2000–End	(869–034–00021–5)	24.00	Jan. 1, 1998
8	(869–034–00022–3)	33.00	Jan. 1, 1998
9 Parts:			
1–199	(869–034–00023–1)	40.00	Jan. 1, 1998
200–End	(869–034–00024–0)	33.00	Jan. 1, 1998
10 Parts:			
0–50	(869–034–00025–8)	39.00	Jan. 1, 1998
51–199	(869–034–00026–6)	32.00	Jan. 1, 1998
200–499	(869–034–00027–4)	31.00	Jan. 1, 1998
500–End	(869–034–00028–2)	43.00	Jan. 1, 1998
11	(869–034–00029–1)	19.00	Jan. 1, 1998
12 Parts:			
1–199	(869–034–00030–4)	17.00	Jan. 1, 1998
200–219	(869–034–00031–2)	21.00	Jan. 1, 1998
220–299	(869–034–00032–1)	39.00	Jan. 1, 1998
300–499	(869–034–00033–9)	23.00	Jan. 1, 1998
500–599	(869–034–00034–7)	24.00	Jan. 1, 1998
600–End	(869–034–00035–5)	44.00	Jan. 1, 1998
13	(869–034–00036–3)	23.00	Jan. 1, 1998
14 Parts:			
1–59	(869–034–00037–1)	47.00	Jan. 1, 1998
60–139	(869–034–00038–0)	40.00	Jan. 1, 1998
140–199	(869–034–00039–8)	16.00	Jan. 1, 1998
200–1199	(869–034–00040–1)	29.00	Jan. 1, 1998
1200–End	(869–034–00041–0)	23.00	Jan. 1, 1998
15 Parts:			
0–299	(869–034–00042–8)	22.00	Jan. 1, 1998
300–799	(869–034–00043–6)	33.00	Jan. 1, 1998
800–End	(869–034–00044–4)	23.00	Jan. 1, 1998
16 Parts:			
0–999	(869–034–00045–2)	30.00	Jan. 1, 1998
1000–End	(869–034–00046–1)	33.00	Jan. 1, 1998
17 Parts:			
1–199	(869–034–00048–7)	27.00	Apr. 1, 1998
200–239	(869–034–00049–5)	32.00	Apr. 1, 1998
240–End	(869–034–00050–9)	40.00	Apr. 1, 1998
18 Parts:			
1–399	(869–034–00051–7)	45.00	Apr. 1, 1998
400–End	(869–034–00052–5)	13.00	Apr. 1, 1998
19 Parts:			
1–140	(869–034–00053–3)	34.00	Apr. 1, 1998
141–199	(869–034–00054–1)	33.00	Apr. 1, 1998
200–End	(869–034–00055–0)	15.00	Apr. 1, 1998
20 Parts:			
1–399	(869–034–00056–8)	29.00	Apr. 1, 1998
400–499	(869–034–00057–6)	28.00	Apr. 1, 1998
500–End	(869–034–00058–4)	44.00	Apr. 1, 1998
21 Parts:			
1–99	(869–034–00059–2)	21.00	Apr. 1, 1998
100–169	(869–034–00060–6)	27.00	Apr. 1, 1998
170–199	(869–034–00061–4)	28.00	Apr. 1, 1998
200–299	(869–034–00062–2)	9.00	Apr. 1, 1998
300–499	(869–034–00063–1)	50.00	Apr. 1, 1998
500–599	(869–034–00064–9)	28.00	Apr. 1, 1998
600–799	(869–034–00065–7)	9.00	Apr. 1, 1998
800–1299	(869–034–00066–5)	32.00	Apr. 1, 1998
1300–End	(869–034–00067–3)	12.00	Apr. 1, 1998
22 Parts:			
1–299	(869–034–00068–1)	41.00	Apr. 1, 1998
300–End	(869–034–00069–0)	31.00	Apr. 1, 1998
23	(869–034–00070–3)	25.00	Apr. 1, 1998
24 Parts:			
0–199	(869–034–00071–1)	32.00	Apr. 1, 1998
200–499	(869–034–00072–0)	28.00	Apr. 1, 1998
500–699	(869–034–00073–8)	17.00	Apr. 1, 1998
700–1699	(869–034–00074–6)	45.00	Apr. 1, 1998
1700–End	(869–034–00075–4)	17.00	Apr. 1, 1998
25	(869–034–00076–2)	42.00	Apr. 1, 1998
26 Parts:			
§§ 1.0-1–1.60	(869–034–00077–1)	26.00	Apr. 1, 1998
§§ 1.61–1.169	(869–034–00078–9)	48.00	Apr. 1, 1998
§§ 1.170–1.300	(869–034–00079–7)	31.00	Apr. 1, 1998
§§ 1.301–1.400	(869–034–00080–1)	23.00	Apr. 1, 1998
§§ 1.401–1.440	(869–034–00081–9)	39.00	Apr. 1, 1998
§§ 1.441-1.500	(869-034-00082-7)	29.00	Apr. 1, 1998
§§ 1.501–1.640	(869–034–00083–5)	27.00	Apr. 1, 1998
§§ 1.641–1.850	(869–034–00084–3)	32.00	Apr. 1, 1998
§§ 1.851–1.907	(869–034–00085–1)	36.00	Apr. 1, 1998
§§ 1.908–1.1000	(869–034–00086–0)	35.00	Apr. 1, 1998
§§ 1.1001–1.1400	(869–034–00087–8)	38.00	Apr. 1, 1998
§§ 1.1401–End	(869–034–00088–6)	51.00	Apr. 1, 1998
2–29	(869–034–00089–4)	36.00	Apr. 1, 1998
30–39	(869–034–00090–8)	25.00	Apr. 1, 1998
40–49	(869–034–00091–6)	16.00	Apr. 1, 1998
50–299	(869–034–00092–4)	19.00	Apr. 1, 1998
300–499	(869–034–00093–2)	34.00	Apr. 1, 1998
500–599	(869–034–00094–1)	10.00	Apr. 1, 1998
600–End	(869–034–00095–9)	9.00	Apr. 1, 1998
27 Parts:			
*1–199	(869–034–00096–7)	49.00	Apr. 1, 1998

Title	Stock Number	Price	Revision Date
200–End	(869–034–00097–5)	17.00	[6] Apr. 1, 1997
28 Parts:			
0-42	(869–034–00098–3)	36.00	July 1, 1998
43-end	(869-032-00099-9)	30.00	July 1, 1997
29 Parts:			
0–99	(869–034–00100–9)	26.00	July 1, 1998
100–499	(869–034–00101–7)	12.00	July 1, 1998
500–899	(869–034–00102–5)	40.00	July 1, 1998
900–1899	(869–034–00103–3)	20.00	July 1, 1998
1900–1910 (§§ 1900 to 1910.999)	(869–032–00104–9)	43.00	July 1, 1997
1910 (§§ 1910.1000 to end)	(869–032–00105–7)	29.00	July 1, 1997
1911–1925	(869–032–00106–5)	19.00	July 1, 1997
*1926	(869–034–00107–6)	30.00	July 1, 1998
1927–End	(869–034–00108–4)	41.00	July 1, 1998
30 Parts:			
1–199	(869–034–00109–2)	33.00	July 1, 1998
*200–699	(869–034–00110–6)	29.00	July 1, 1998
700–End	(869–032–00111–1)	32.00	July 1, 1997
31 Parts:			
0–199	(869–034–00112–2)	20.00	July 1, 1998
200–End	(869–032–00113–8)	42.00	July 1, 1997
32 Parts:			
1–39, Vol. I		15.00	[2] July 1, 1984
1–39, Vol. II		19.00	[2] July 1, 1984
1–39, Vol. III		18.00	[2] July 1, 1984
1–190	(869–034–00114–9)	47.00	July 1, 1998
191–399	(869–032–00115–4)	51.00	July 1, 1997
*400–629	(869–034–00116–5)	33.00	July 1, 1998
630–699	(869–032–00117–1)	22.00	July 1, 1997
700–799	(869–032–00118–9)	28.00	July 1, 1997
800–End	(869–032–00119–7)	27.00	July 1, 1997
33 Parts:			
1–124	(869–032–00120–1)	27.00	July 1, 1997
125–199	(869–032–00121–9)	36.00	July 1, 1997
200–End	(869–034–00122–0)	30.00	July 1, 1998
34 Parts:			
1–299	(869–032–00123–5)	28.00	July 1, 1997
300–399	(869–032–00124–3)	27.00	July 1, 1997
400–End	(869–032–00125–1)	44.00	July 1, 1997
35	(869–032–00126–0)	15.00	July 1, 1997
36 Parts			
1–199	(869–034–00127–1)	20.00	July 1, 1998
200–299	(869–034–00128–9)	21.00	July 1, 1998
300–End	(869–032–00129–4)	34.00	July 1, 1997
37	(869–032–00130–8)	27.00	July 1, 1997
38 Parts:			
0–17	(869–034–00131–9)	34.00	July 1, 1998
18–End	(869–032–00132–4)	38.00	July 1, 1997
39	(869–034–00133–5)	23.00	July 1, 1998
40 Parts:			
1–49	(869–032–00134–1)	31.00	July 1, 1997
50–51	(869–032–00135–9)	23.00	July 1, 1997
52 (52.01–52.1018)	(869–032–00136–7)	27.00	July 1, 1997
52 (52.1019–End)	(869–034–00137–8)	33.00	July 1, 1998
53–59	(869–032–00138–3)	14.00	July 1, 1997
60	(869–032–00139–1)	52.00	July 1, 1997
61–62	(869–032–00140–5)	19.00	July 1, 1997
63–71	(869–032–00141–3)	57.00	July 1, 1997
64–71	(869–034–00142–4)	11.00	July 1, 1998
72–80	(869–032–00142–1)	35.00	July 1, 1997
81–85	(869–032–00143–0)	32.00	July 1, 1997
86	(869–032–00144–8)	50.00	July 1, 1997
87-135	(869–032–00145–6)	40.00	July 1, 1997
136–149	(869–032–00146–4)	35.00	July 1, 1997
150–189	(869–032–00147–2)	32.00	July 1, 1997
190–259	(869–032–00148–1)	22.00	July 1, 1997
260–265	(869–032–00149–9)	29.00	July 1, 1997
266–299	(869–032–00150–2)	24.00	July 1, 1997
300–399	(869–032–00151–1)	27.00	July 1, 1997
400–424	(869–032–00152–9)	33.00	[5] July 1, 1996
425–699	(869–032–00153–7)	40.00	July 1, 1997
700–789	(869–032–00154–5)	38.00	July 1, 1997
*790–End	(869–034–00156–4)	22.00	July 1, 1998
41 Chapters:			
1, 1–1 to 1–10		13.00	[3] July 1, 1984
1, 1–11 to Appendix, 2 (2 Reserved)		13.00	[3] July 1, 1984
3–6		14.00	[3] July 1, 1984
7		6.00	[3] July 1, 1984
8		4.50	[3] July 1, 1984
9		13.00	[3] July 1, 1984
10–17		9.50	[3] July 1, 1984
18, Vol. I, Parts 1–5		13.00	[3] July 1, 1984
18, Vol. II, Parts 6–19		13.00	[3] July 1, 1984
18, Vol. III, Parts 20–52		13.00	[3] July 1, 1984
19–100		13.00	[3] July 1, 1984
1–100	(869–034–00157–2)	13.00	July 1, 1998
101	(869–032–00157–0)	36.00	July 1, 1997
102–200	(869–034–00158–9)	15.00	July 1, 1998
201–End	(869–032–00159–6)	15.00	July 1, 1997
42 Parts:			
1–399	(869–032–00160–0)	32.00	Oct. 1, 1997
400–429	(869–032–00161–8)	35.00	Oct. 1, 1997
430–End	(869–032–00162–6)	50.00	Oct. 1, 1997
43 Parts:			
1–999	(869–032–00163–4)	31.00	Oct. 1, 1997
1000–end	(869–032–00164–2)	50.00	Oct. 1, 1997
44	(869–032–00165–1)	31.00	Oct. 1, 1997
45 Parts:			
1–199	(869–032–00166–9)	30.00	Oct. 1, 1997
200–499	(869–032–00167–7)	18.00	Oct. 1, 1997
500–1199	(869–032–00168–5)	29.00	Oct. 1, 1997
1200–End	(869–032–00169–3)	39.00	Oct. 1, 1997
46 Parts:			
1–40	(869–032–00170–7)	26.00	Oct. 1, 1997
41–69	(869–032–00171–5)	22.00	Oct. 1, 1997
70–89	(869–032–00172–3)	11.00	Oct. 1, 1997
90–139	(869–032–00173–1)	27.00	Oct. 1, 1997
140–155	(869–032–00174–0)	15.00	Oct. 1, 1997
156–165	(869–032–00175–8)	20.00	Oct. 1, 1997
166–199	(869–032–00176–6)	26.00	Oct. 1, 1997
200–499	(869–032–00177–4)	21.00	Oct. 1, 1997
500–End	(869–032–00178–2)	17.00	Oct. 1, 1997
47 Parts:			
0–19	(869–032–00179–1)	34.00	Oct. 1, 1997
20–39	(869–032–00180–4)	27.00	Oct. 1, 1997
40–69	(869–032–00181–2)	23.00	Oct. 1, 1997
70–79	(869–032–00182–1)	33.00	Oct. 1, 1997
80–End	(869–032–00183–9)	43.00	Oct. 1, 1997
48 Chapters:			
1 (Parts 1–51)	(869–032–00184–7)	53.00	Oct. 1, 1997
1 (Parts 52–99)	(869–032–00185–5)	29.00	Oct. 1, 1997
2 (Parts 201–299)	(869–032–00186–3)	35.00	Oct. 1, 1997
3–6	(869–032–00187–1)	29.00	Oct. 1, 1997
7–14	(869–032–00188–0)	32.00	Oct. 1, 1997
15–28	(869–032–00189–8)	33.00	Oct. 1, 1997
29–End	(869–032–00190–1)	25.00	Oct. 1, 1997
49 Parts:			
1–99	(869–032–00191–0)	31.00	Oct. 1, 1997
100–185	(869–032–00192–8)	50.00	Oct. 1, 1997
186–199	(869–032–00193–6)	11.00	Oct. 1, 1997
200–399	(869–032–00194–4)	43.00	Oct. 1, 1997
400–999	(869–032–00195–2)	49.00	Oct. 1, 1997
1000–1199	(869–032–00196–1)	19.00	Oct. 1, 1997
1200–End	(869–032–00197–9)	14.00	Oct. 1, 1997
50 Parts:			
1–199	(869–032–00198–7)	41.00	Oct. 1, 1997
200–599	(869–032–00199–5)	22.00	Oct. 1, 1997
600–End	(869–032–00200–2)	29.00	Oct. 1, 1997

Title	Stock Number	Price	Revision Date
CFR Index and Findings Aids	(869–034–00049–6)	46.00	Jan. 1, 1998
Complete 1998 CFR set		951.00	1998
Microfiche CFR Edition:			
Subscription (mailed as issued)		247.00	1998
Individual copies		1.00	1998
Complete set (one-time mailing)		247.00	1997
Complete set (one-time mailing)		264.00	1996

[1] Because Title 3 is an annual compilation, this volume and all previous volumes should be retained as a permanent reference source.

[2] The July 1, 1985 edition of 32 CFR Parts 1–189 contains a note only for Parts 1–39 inclusive. For the full text of the Defense Acquisition Regulations in Parts 1–39, consult the three CFR volumes issued as of July 1, 1984, containing those parts.

[3] The July 1, 1985 edition of 41 CFR Chapters 1–100 contains a note only for Chapters 1 to 49 inclusive. For the full text of procurement regulations in Chapters 1 to 49, consult the eleven CFR volumes issued as of July 1, 1984 containing those chapters.

[4] No amendments to this volume were promulgated during the period July 1, 1996 to June 30, 1997. The volume issued July 1, 1996, should be retained.

[5] No amendments to this volume were promulgated during the period January 1, 1997 through December 31, 1997. The CFR volume issued as of January 1, 1997 should be retained.

[6] No amendments to this volume were promulgated during the period April 1, 1997, through April 1, 1998. The CFR volume issued as of April 1, 1997, should be retained.