3–5–99
Vol. 64 No. 43
Pages 10555–10918

federal register

Friday
March 5, 1999

Briefings on how to use the Federal Register
For information on briefings in Washington, DC, see announcement on the inside cover of this issue.

The **FEDERAL REGISTER** is published daily, Monday through Friday, except official holidays, by the Office of the Federal Register, National Archives and Records Administration, Washington, DC 20408, under the Federal Register Act (44 U.S.C. Ch. 15) and the regulations of the Administrative Committee of the Federal Register (1 CFR Ch. I). The Superintendent of Documents, U.S. Government Printing Office, Washington, DC 20402 is the exclusive distributor of the official edition.

The **Federal Register** provides a uniform system for making available to the public regulations and legal notices issued by Federal agencies. These include Presidential proclamations and Executive Orders, Federal agency documents having general applicability and legal effect, documents required to be published by act of Congress, and other Federal agency documents of public interest.

Documents are on file for public inspection in the Office of the Federal Register the day before they are published, unless the issuing agency requests earlier filing. For a list of documents currently on file for public inspection, see http://www.nara.gov/fedreg.

The seal of the National Archives and Records Administration authenticates the Federal Register as the official serial publication established under the Federal Register Act. Under 44 U.S.C. 1507, the contents of the **Federal Register** shall be judicially noticed.

The **Federal Register** is published in paper and on 24x microfiche. It is also available online at no charge as one of the databases on GPO Access, a service of the U.S. Government Printing Office.

The online edition of the **Federal Register** is issued under the authority of the Administrative Committee of the Federal Register as the official legal equivalent of the paper and microfiche editions (44 U.S.C. 4101 and 1 CFR 5.10). It is updated by 6 a.m. each day the **Federal Register** is published and it includes both text and graphics from Volume 59, Number 1 (January 2, 1994) forward.

GPO Access users can choose to retrieve online **Federal Register** documents as TEXT (ASCII text, graphics omitted), PDF (Adobe Portable Document Format, including full text and all graphics), or SUMMARY (abbreviated text) files. Users should carefully check retrieved material to ensure that documents were properly downloaded.

On the World Wide Web, connect to the **Federal Register** at http://www.access.gpo.gov/nara. Those without World Wide Web access can also connect with a local WAIS client, by Telnet to swais.access.gpo.gov, or by dialing (202) 512-1661 with a computer and modem. When using Telnet or modem, type swais, then log in as guest with no password.

For more information about GPO Access, contact the GPO Access User Support Team by E-mail at gpoaccess@gpo.gov; by fax at (202) 512–1262; or call (202) 512–1530 or 1–888–293–6498 (toll free) between 7 a.m. and 5 p.m. Eastern time, Monday–Friday, except Federal holidays.

The annual subscription price for the **Federal Register** paper edition is $555, or $607 for a combined **Federal Register,** Federal Register Index and List of CFR Sections Affected (LSA) subscription; the microfiche edition of the **Federal Register** including the Federal Register Index and LSA is $220. Six month subscriptions are available for one-half the annual rate. The charge for individual copies in paper form is $8.00 for each issue, or $8.00 for each group of pages as actually bound; or $1.50 for each issue in microfiche form. All prices include regular domestic postage and handling. International customers please add 25% for foreign handling. Remit check or money order, made payable to the Superintendent of Documents, or charge to your GPO Deposit Account, VISA, MasterCard or Discover. Mail to: New Orders, Superintendent of Documents, P.O. Box 371954, Pittsburgh, PA 15250–7954.

There are no restrictions on the republication of material appearing in the **Federal Register.**

How To Cite This Publication: Use the volume number and the page number. Example: 64 FR 12345.

SUBSCRIPTIONS AND COPIES

PUBLIC	
Subscriptions:	
Paper or fiche	**202–512–1800**
Assistance with public subscriptions	**512–1806**
General online information	**202–512–1530; 1–888–293–6498**
Single copies/back copies:	
Paper or fiche	**512–1800**
Assistance with public single copies	**512–1803**
FEDERAL AGENCIES	
Subscriptions:	
Paper or fiche	**523–5243**
Assistance with Federal agency subscriptions	**523–5243**

FEDERAL REGISTER WORKSHOP

THE FEDERAL REGISTER: WHAT IT IS AND HOW TO USE IT

FOR: Any person who uses the Federal Register and Code of Federal Regulations.

WHO: Sponsored by the Office of the Federal Register.

WHAT: Free public briefings (approximately 3 hours) to present:

1. The regulatory process, with a focus on the Federal Register system and the public's role in the development regulations.
2. The relationship between the Federal Register and Code of Federal Regulations.
3. The important elements of typical Federal Register documents.
4. An introduction to the finding aids of the FR/CFR system.

WHY: To provide the public with access to information necessary to research Federal agency regulations which directly affect them. There will be no discussion of specific agency regulations.

WASHINGTON, DC

WHEN: March 23, 1999 at 9:00 am.

WHERE: Office of the Federal Register
Conference Room
800 North Capitol Street, NW.
Washington, DC
(3 blocks north of Union Station Metro)

RESERVATIONS: 202–523–4538

Printed on recycled paper.

Contents

Federal Register

Vol. 64, No. 43

Friday, March 5, 1999

Agriculture Department
See Forest Service
NOTICES
Agency information collection activities:
Submission for OMB review; comment request, 10617

Army Department
See Engineers Corps

Blind or Severely Disabled, Committee for Purchase From People Who Are
See Committee for Purchase From People Who Are Blind or Severely Disabled

Broadcasting Board of Governors
NOTICES
Meetings; Sunshine Act, 10621

Coast Guard
NOTICES
Meetings:
Great Lakes Regional Waterways Management Forum, 10733–10734

Commerce Department
See Export Administration Bureau
See International Trade Administration
See National Oceanic and Atmospheric Administration

Committee for Purchase From People Who Are Blind or Severely Disabled
NOTICES
Procurement list; additions and deletions, 10619–10621

Consumer Product Safety Commission
NOTICES
Settlement agreements:
Carter Brothers Manufacturing Co., Inc., 10649–10651

Corporation for National and Community Service
PROPOSED RULES
Privacy Act; implementation, 10871–10878
NOTICES
Privacy Act:
Systems of records, 10879–10893

Defense Department
See Engineers Corps

Drug Enforcement Administration
NOTICES
Applications, hearings, determinations, etc.:
Chiragene, Inc., 10724
Ganes Chemicals, Inc., 10724
Radian International LLC, 10725
Sigma Aldrich Research Biochemicals, Inc., 10725

Education Department
NOTICES
Agency information collection activities:
Submission for OMB review; comment request, 10652
Grants and cooperative agreements; availability, etc.:
Educational research and improvement—
National Research Institutes' Field-Initiated Studies Research Program, 10652–10653

Employment Standards Administration
NOTICES
Minimum wages for Federal and federally-assisted construction; general wage determination decisions, 10725–10726

Energy Department
See Federal Energy Regulatory Commission
NOTICES
Meetings:
Environmental Management Site-Specific Advisory Board—
Rocky Flats, CO, 10653–10654

Engineers Corps
NOTICES
Environmental statements; availability, etc.:
Jackson, Clarke County, AL; Tombigbee River public port facilities, 10651–10652

Environmental Protection Agency
RULES
Pesticides; tolerances in food, animal feeds, and raw agricultural commodities:
Oxirane, etc., 10567–10571
PROPOSED RULES
Air pollution control; new motor vehicles and engines:
Compression-ignition marine engines at or above 37 kilowatts, 10596
Superfund program:
Toxic chemical release reporting; community right-to-know—
Acetonitrile; petition denied, 10597–10604
Water programs:
Pollutants analysis test procedures; guidelines—
Mercury; measurement method, 10596–10597
NOTICES
Agency information collection activities:
Submission for OMB review; comment request, 10658–10661
Environmental statements; availability, etc.:
Agency statements—
Comment availability, 10661–10662
Weekly receipts, 10662
Meetings:
National Drinking Water Advisory Council, 10662
Risk Characterization Handbook and case studies; peer review workshop, 10662–10663

Executive Office of the President
See Management and Budget Office

Export Administration Bureau
RULES
Export licensing:
Commerce control list—
Wassenaar Arrangement List of Dual-Use Items; implementation; commerce control list revisions and reporting requirements, 10851–10869

Federal Aviation Administration
RULES
Airworthiness directives:
Boeing, 10557–10559
British Aerospace, 10555–10557
Raytheon, 10560–10561
Airworthiness standards:
Transport category airplanes—
High-lift device controls; gate requirements; correction, 10740
Class E airspace, 10562–10564
Class E airspace; correction, 10740
PROPOSED RULES
Airworthiness directives:
Boeing, 10578–10579
NOTICES
Meetings:
Aviation Rulemaking Advisory Committee, 10734
Passenger facility charges; applications, etc.:
Worcester Regional Airport, MA, 10734–10735

Federal Energy Regulatory Commission
NOTICES
Hydroelectric applications, 10656–10657
Applications, hearings, determinations, etc.:
Cabrillo Power I LLC et al., 10654
Canadian-Montana Pipe Line Corp.; correction, 10740
Lakewood Cogeneration L.P., 10654–10655
LG&E-Westmoreland Rensselaer, 10655
Minnesota Agri-Power, L.L.C., 10655
Mobile Energy Services Co., L.L.C., 10655–10656
Reliant Energy Gas Transmission Co.; correction, 10740
Sierra Pacific Power Co., 10656
Williams Gas Pipelines Central, Inc., 10656

Federal Highway Administration
NOTICES
Outdoor advertising control; Nevada Transportation Department application to change Highway Beautification Federal/State Agreement, 10735–10736
Reports and guidance documents; availability, etc.:
Highway Performance Monitoring System; strategic reassessment, 10736–10737

Federal Maritime Commission
NOTICES
Agreements filed, etc., 10663

Federal Reserve System
NOTICES
Banks and bank holding companies:
Change in bank control, 10663
Formations, acquisitions, and mergers, 10663–10664
Meetings:
Consumer Advisory Council, 10664

Fish and Wildlife Service
NOTICES
Endangered and threatened species:
Recovery plans—
Gila topminnow, 10716–10717
Endangered and threatened species permit applications, 10714–10716
Environmental statements; availability, etc.:
Incidental take permits—
Clatsop County, OR; northern spotted owl, 10717–10718

Forest Service
NOTICES
Environmental statements; notice of intent:
Allegheny National Forest, PA, 10618–10619
Meetings:
Klamath Provincial Advisory Committee, 10619

Health and Human Services Department
See Health Resources and Services Administration
See National Institutes of Health

Health Resources and Services Administration
NOTICES
National vaccine injury compensation program:
Health insurance policy; average cost revision, 10664–10665

Housing and Urban Development Department
NOTICES
Agency information collection activities:
Proposed collection; comment request, 10671–10672
Submission for OMB review; comment request, 10672–10673
Grants and cooperative agreements; availability, etc.:
Community development block grant program—
Multifamily housing owners; service coordinator program, 10911–10918
Facilities to assist homeless—
Excess and surplus Federal property, 10673–10714
Public and Indian housing—
Family Unification Program, 10903–10910

Interior Department
See Fish and Wildlife Service
See Land Management Bureau
See Reclamation Bureau
NOTICES
Watches and watch movements; allocation of duty-exemptions:
Virgin Islands, 10622–10623

International Development Cooperation Agency
See Overseas Private Investment Corporation

International Trade Administration
NOTICES
Antidumping:
Professional electric cutting tools from—
Japan, 10621
Committees; establishment, renewal, termination, etc.:
U.S.-China Housing Initiative; U.S.-China Residential Building Council, 10621–10622
Watches and watch movements; allocation of duty-exemptions:
Virgin Islands, 10622–10623

International Trade Commission
NOTICES
Import investigations:
Hot-rolled steel products from—
Brazil and Japan, 10723–10724
Russia, 10722–10723

Justice Department
See Drug Enforcement Administration

Labor Department
See Employment Standards Administration

Land Management Bureau
NOTICES
Closure of public lands:
Oregon, 10718–10719
Oil and gas leases:
New Mexico, 10719
Realty actions; sales, leases, etc.:
California, 10719
Recreation management restrictions, etc.:
San Miguel River Special Recreation Area, CO; commercial outfitting moratorium lifted, etc., 10720
Withdrawal and reservation of lands:
Wyoming, 10720–10721

Management and Budget Office
NOTICES
Government Paperwork Elimination Act; implementation:
Electronic documents, signatures, and record keeping; optional use and acceptance, 10895–10902

Medicare Payment Advisory Commission
NOTICES
Meetings, 10726

National Aeronautics and Space Administration
RULES
Acquisition regulations:
Canadian Commercial Corp. and small business innovation research Phase II contracts; submission of cost or pricing data for acquisitions; waiver, 10573
Earned value management system; application, 10573–10575
Mentor-protege program, 10571–10572
NOTICES
Agency information collection activities:
Submission for OMB review; comment request, 10726–10727

National Credit Union Administration
NOTICES
Agency information collection activities:
Submission for OMB review; comment request, 10727–10728

National Highway Traffic Safety Administration
RULES
Motor Vehicle Safety Standards:
Child restraint systems—
Standardized child restraint anchorage systems independent of seat belts, 10785–10850
PROPOSED RULES
Motor vehicle safety standards:
Bus emergency exits and window retention and release—
Wheelchair securement devices; anchorages, 10604–10611
NOTICES
Motor vehicle safety standards; exemption petitions, etc.:
Red River Manufacturing, Inc., 10737–10738

National Institutes of Health
NOTICES
Committees; establishment, renewal, termination, etc.:
Cancer Advisory Panel for Complementary and Alternative Medicine, 10665
Inventions, Government-owned; availability for licensing, 10665–10667
Meetings:
National Cancer Institute, 10667
National Institute of Child Health and Human Development, 10668
National Institute of General Medical Sciences, 10667–10669
National Institute of Neurological Disorders and Stroke, 10668
National Institute on Aging, 10669
National Institute on Alcohol Abuse and Alcoholism, 10669
Scientific Review Center, 10669–10671
Patent licenses; non-exclusive, exclusive, or partially exclusive:
American Home Products Corp., 10671

National Oceanic and Atmospheric Administration
RULES
Fishery conservation and management:
Tuna, Atlantic bluefin fisheries, 10576–10577
PROPOSED RULES
Fishery conservation and management:
Caribbean, Gulf, and South Atlantic fisheries—
Essential fish habitat, 10612–10613
Gulf of Mexico reef fish, 10613–10616
NOTICES
Grants and cooperative agreements; availability, etc.:
National Sea Grant College Program—
Aquatic nuisance species research and outreach and ballast water treatment and management methods, 10623–10628
Dean John A. Knauss Marine Policy Fellowship, 10628–10630
Industry Fellowship Program, 10636–10640
National Oyster Disease Research Program and Gulf Oyster Industry Program, 10630–10636
Technology transfer and development program, 10640–10644
Marine mammals:
Incidental taking; authorization letters, etc.—
U.S. Geological Survey; southern California offshore marine seismic-reflection data collection, 10644–10648
Permits:
Marine mammals, 10649

National Science Foundation
NOTICES
Meetings:
Engineering Education and Centers Special Emphasis Panel, 10728
Experimental and Integrative Activities Special Emphasis Panel, 10728

Nuclear Regulatory Commission
NOTICES
Applications, hearings, determinations, etc.:
Commonwealth Edison Co., 10728–10729
Entergy Operations, Inc., 10729

Office of Management and Budget
See Management and Budget Office

Overseas Private Investment Corporation
NOTICES
Agency information collection activities:
Proposed collection; comment request, 10721–10722

Public Health Service
See Health Resources and Services Administration
See National Institutes of Health

Railroad Retirement Board
NOTICES
Supplemental annuity program; determination of quarterly rate of excise tax, 10729

Reclamation Bureau
NOTICES
Meetings:
Trinity River Basin Fish and Wildlife Task Force, 10721

Research and Special Programs Administration
RULES
Hazardous materials:
Hazardous materials transportation—
Harmonization with UN recommendations, International Maritime Dangerous Goods Code, and International Civil Aviation Organization's technical instructions, 10741–10783

Securities and Exchange Commission
RULES
Securities:
Belgium; securities exemption for purposes of trading futures contracts, 10564–10567
PROPOSED RULES
Securities:
Subsidiary issuers and guarantors; financial statements and periodic reports, 10579–10596
NOTICES
Investment Company Act of 1940:
Deregistration applications—
Morgan Stanley Dean Witter Intermediate Term U.S. Treasury Trust et al., 10732–10733
Applications, hearings, determinations, etc.:
Public utility holding company filings, 10729–10730
Victory Portfolios et al., 10730–10732

State Department
NOTICES
Committees; establishment, renewal, termination, etc.:
Labor Diplomacy Advisory Committee, 10733

Transportation Department
See Coast Guard
See Federal Aviation Administration
See Federal Highway Administration
See National Highway Traffic Safety Administration
See Research and Special Programs Administration
NOTICES
Agency information collection activities:
Submission for OMB review; comment request, 10733

Treasury Department
NOTICES
Agency information collection activities:
Submission for OMB review; comment request, 10738

Veterans Affairs Department
NOTICES
Meetings:
Prosthetics and Special-Disabilities Programs Advisory Committee, 10738–10739

Separate Parts In This Issue

Part II
Department of Transportation, Research and Special Programs Administration, 10741–10783

Part III
Department of Transportation, National Highway Traffic Safety Administration, 10785–10850

Part IV
Department of Commerce, Bureau of Export Administration, 10851–10869

Part V
Corporation for National and Community Service, 10871–10893

Part VI
Office of Management and Budget, 10895–10902

Part VII
Department of Housing and Urban Development, 10903–10910

Part VIII
Department of Housing and Urban Development, 10911–10918

Reader Aids
Consult the Reader Aids section at the end of this issue for phone numbers, online resources, finding aids, reminders, and notice of recently enacted public laws.

CFR PARTS AFFECTED IN THIS ISSUE

A cumulative list of the parts affected this month can be found in the Reader Aids section at the end of this issue.

14 CFR
25 10740
39 (3 documents) 10555, 10557, 10560
71 (3 documents) 10562, 10563, 10740

Proposed Rules:
39 10578

15 CFR
774 10852

17 CFR
240 10564

Proposed Rules:
210 10579
228 10579
240 10579

40 CFR
180 10567

Proposed Rules:
94 10596
136 10596
372 10597

45 CFR

Proposed Rules:
1224 10872
2508 10872

48 CFR
1806 10571
1815 10573
1819 10571
1842 10573
1852 (2 documents) 10571, 10573

49 CFR
171 10742
172 10742
173 10742
174 10742
175 10742
176 10742
177 10742
178 10742
180 10742
571 10786
596 10786

Proposed Rules:
571 10604

50 CFR
285 10576

Proposed Rules:
622 (2 documents) 10612, 10613

Rules and Regulations

Federal Register
Vol. 64, No. 43
Friday, March 5, 1999

This section of the FEDERAL REGISTER contains regulatory documents having general applicability and legal effect, most of which are keyed to and codified in the Code of Federal Regulations, which is published under 50 titles pursuant to 44 U.S.C. 1510.

The Code of Federal Regulations is sold by the Superintendent of Documents. Prices of new books are listed in the first FEDERAL REGISTER issue of each week.

DEPARTMENT OF TRANSPORTATION

Federal Aviation Administration

14 CFR Part 39

[Docket No. 98–NM–27–AD; Amendment 39–11059; AD 99–05–11]

RIN 2120–AA64

Airworthiness Directives; British Aerospace Model BAC 1–11 200 and 400 Series Airplanes

AGENCY: Federal Aviation Administration, DOT.

ACTION: Final rule.

SUMMARY: This amendment supersedes an existing airworthiness directive (AD), applicable to all British Aerospace Model BAC 1–11 200 and 400 series airplanes, that currently requires repetitive visual inspections to detect cracks in the flight deck canopy area, and repair, if necessary; and repetitive detailed visual and eddy current inspections to detect cracks of the top sill members at station 82.5, and replacement of cracked parts with new parts, or repair of the top sill members. This amendment continues to require detailed visual and eddy current inspections to detect cracks of the top sill members at station 82.5. This amendment also adds a requirement for a one-time inspection to determine the type of fasteners installed in certain holes of the joint strap installation, and replacement of rivets with bolts, if necessary. This amendment is prompted by the issuance of mandatory continuing airworthiness information by a foreign civil airworthiness authority. The actions specified by this AD are intended to detect and correct cracking in the flight deck canopy area, which could result in reduced structural integrity of the flight deck frame and adjacent fuselage structure.

DATES: Effective April 9, 1999.

The incorporation by reference of certain publications listed in the regulations is approved by the Director of the Federal Register as of April 9, 1999.

The incorporation by reference of British Aerospace Alert Service Bulletin 53–A–PM5994, Issue 3, dated April 8, 1993, as listed in the regulations, was approved previously by the Director of the Federal Register as of April 22, 1996 (61 FR 11534, March 21, 1996).

ADDRESSES: The service information referenced in this AD may be obtained from British Aerospace, Service Support, Airbus Limited, P.O. Box 77, Bristol BS99 7AR, England. This information may be examined at the Federal Aviation Administration (FAA), Transport Airplane Directorate, Rules Docket, 1601 Lind Avenue, SW., Renton, Washington; or at the Office of the Federal Register, 800 North Capitol Street, NW., suite 700, Washington, DC.

FOR FURTHER INFORMATION CONTACT: Norman B. Martenson, Manager, International Branch, ANM–116, FAA, Transport Airplane Directorate, 1601 Lind Avenue, SW., Renton, Washington 98055–4056; telephone (425) 227–2110; fax (425) 227–1149.

SUPPLEMENTARY INFORMATION: A proposal to amend part 39 of the Federal Aviation Regulations (14 CFR part 39) by superseding AD 96–06–07, amendment 39–9544 (61 FR 11534, March 21, 1996), which is applicable to all British Aerospace Model BAC 1–11 200 and 400 series airplanes, was published in the **Federal Register** on January 6, 1999 (64 FR 785). The action proposed to continue to require detailed visual and eddy current inspections to detect cracks of the top sill members at station 82.5, and replacement of cracked parts with new parts, or repair of the top sill members. The action also proposed to add a requirement for a one-time inspection to determine the type of fasteners installed in certain holes of the joint strap installation, and replacement of rivets with bolts, if necessary.

Comments

Interested persons have been afforded an opportunity to participate in the making of this amendment. No comments were submitted in response to the proposal or the FAA's determination of the cost to the public.

Conclusion

The FAA has determined that air safety and the public interest require the adoption of the rule as proposed.

Cost Impact

There are approximately 42 airplanes of U.S. registry that will be affected by this AD.

The actions that are currently required by AD 96–06–07, and retained in this AD, take approximately 19 work hours per airplane to accomplish (including access and close), at an average labor rate of $60 per work hour. Based on these figures, the cost impact of the currently required actions on U.S. operators is estimated to be $47,880, or $1,140 per airplane, per inspection cycle.

The new inspection that is required in this AD action will take approximately 1 work hour per airplane to accomplish, at an average labor rate of $60 per work hour. Based on these figures, the cost impact of the new inspection required by this AD on U.S. operators is estimated to be $2,520, or $60 per airplane.

Should an operator be required to accomplish the necessary replacement of rivets with bolts, it will take approximately 3 work hours per airplane to accomplish the replacement, at an average labor rate of $60 per work hour. Based on these figures, the cost impact of any necessary replacement of rivets is estimated to be $180 per airplane.

The cost impact figures discussed above are based on assumptions that no operator has yet accomplished any of the requirements of this AD action, and that no operator would accomplish those actions in the future if this AD were not adopted.

Regulatory Impact

The regulations adopted herein will not have substantial direct effects on the States, on the relationship between the national government and the States, or on the distribution of power and responsibilities among the various levels of government. Therefore, in accordance with Executive Order 12612, it is determined that this final rule does not have sufficient federalism implications to warrant the preparation of a Federalism Assessment.

For the reasons discussed above, I certify that this action (1) is not a

''significant regulatory action'' under Executive Order 12866; (2) is not a ''significant rule'' under DOT Regulatory Policies and Procedures (44 FR 11034, February 26, 1979); and (3) will not have a significant economic impact, positive or negative, on a substantial number of small entities under the criteria of the Regulatory Flexibility Act. A final evaluation has been prepared for this action and it is contained in the Rules Docket. A copy of it may be obtained from the Rules Docket at the location provided under the caption **ADDRESSES.**

List of Subjects in 14 CFR Part 39

Air transportation, Aircraft, Aviation safety, Incorporation by reference, Safety.

Adoption of the Amendment

Accordingly, pursuant to the authority delegated to me by the Administrator, the Federal Aviation Administration amends part 39 of the Federal Aviation Regulations (14 CFR part 39) as follows:

PART 39—AIRWORTHINESS DIRECTIVES

1. The authority citation for part 39 continues to read as follows:

Authority: 49 U.S.C. 106(g), 40113, 44701.

§ 39.13 [Amended]

2. Section 39.13 is amended by removing amendment 39–9544 (61 FR 11534, March 21, 1996), and by adding a new airworthiness directive (AD), amendment 39–11059, to read as follows:

99–05–11 British Aerospace Airbus Limited (Formerly British Aerospace Commercial Aircraft Limited, British Aerospace Aircraft Group): Amendment 39–11059. Docket 98–NM–27–AD. Supersedes AD 96–06–07, Amendment 39–9544.

Applicability: All Model BAC 1–11 200 and 400 series airplanes, certificated in any category.

Note 1: This AD applies to each airplane identified in the preceding applicability provision, regardless of whether it has been modified, altered, or repaired in the area subject to the requirements of this AD. For airplanes that have been modified, altered, or repaired so that the performance of the requirements of this AD is affected, the owner/operator must request approval for an alternative method of compliance in accordance with paragraph (d) of this AD. The request should include an assessment of the effect of the modification, alteration, or repair on the unsafe condition addressed by this AD; and, if the unsafe condition has not been eliminated, the request should include specific proposed actions to address it.

Compliance: Required as indicated, unless accomplished previously.

To prevent reduced structural integrity of the flight deck frame and adjacent fuselage structure, accomplish the following:

(a) Perform a detailed visual inspection to detect cracks of the top sill joint strap at station 82.5, of the frame at station 113, and of the frame at station 160.5 (left-hand side only) between stringers 13 and 15; and an eddy current inspection to detect cracks of the top sill members at station 82.5. Perform these inspections in accordance with British Aerospace Alert Service Bulletin 53–A–PM5994, Issue 3, dated April 8, 1993; Issue 4, dated August 23, 1996; or Issue 5, dated April 18, 1997; at the time specified in paragraph (a)(1) or (a)(2) of this AD, as applicable. After the effective date of this AD, only Issue 5 shall be used.

(1) For airplanes operating at a maximum cabin differential pressure not exceeding 7.5 pounds per square inch (psi): Perform the inspections at the later of the times specified in paragraphs (a)(1)(i) and (a)(1)(ii) of this AD. Thereafter, repeat these inspections at intervals not to exceed 5,000 landings or 7,500 hours time-in-service, whichever occurs first.

(i) Prior to the accumulation of 20,000 total landings. Or

(ii) Within 1,200 landings or 12 months after April 22, 1996 (the effective date of AD 96–06–07, amendment 39–9544), whichever occurs later.

(2) For airplanes operating at a maximum cabin differential pressure greater than 7.5 psi, but not exceeding 8.2 psi, including those airplanes having incorporated British Aerospace Airbus Limited Modification PM3187: Perform the inspections at the later of the times specified in paragraphs (a)(2)(i) and (a)(2)(ii) of this AD. Thereafter, repeat these inspections at intervals not to exceed 3,500 landings or 5,250 hours time-in-service, whichever occurs first.

(i) Prior to the accumulation of 14,000 total landings. Or

(ii) Within 800 landings or 12 months after April 22, 1996, whichever occurs later.

Note 2: British Aerospace Airbus Limited Modification PM3187 increases the cabin differential pressure from the normal 7.5 psi to 8.2 psi. If Modification PM3187 has been incorporated on the airplane, that airplane is considered to be subject to the requirements of paragraph (a)(2) of this AD.

(b) Concurrent with the next detailed visual inspection performed after the effective date of this AD in accordance with paragraph (a) of this AD, perform a one-time visual inspection to determine the type of fasteners installed in the two hole locations specified in Figure 2 of British Aerospace Alert Service Bulletin 53–A–PM5994, Issue 5, dated April 18, 1997.

(1) If bolts are found installed in the two hole locations specified in Figure 2 of the alert service bulletin: Prior to further flight, remove the bolts and perform the eddy current inspection specified in paragraph (a) of this AD to detect cracking of the top sill members at station 82.5, in accordance with the alert service bulletin. Repeat the detailed visual and eddy current inspections thereafter as specified in paragraph (a)(1) or (a)(2) of this AD, as applicable; in accordance with the alert service bulletin.

(i) If no cracking is detected, prior to further flight, reinstall the bolts.

(ii) If any cracking is detected, prior to further flight, repair in accordance with paragraph (c) of this AD, and reinstall the bolts.

(2) If rivets are found installed in the two hole locations specified in Figure 2 of the alert service bulletin: Prior to further flight, remove the rivets, and perform the eddy current inspection specified in paragraph (a) of this AD to detect cracking of the top sill members at station 82.5, in accordance with the alert service bulletin. Repeat the detailed visual and eddy current inspections thereafter as specified in paragraph (a)(1) or (a)(2) of this AD, as applicable; in accordance with the alert service bulletin.

(i) If no cracking is detected, prior to further flight, oversize the holes specified in Figure 2 of the alert service bulletin, and install bolts in place of the rivets.

(ii) If any cracking is detected, prior to further flight, repair in accordance with paragraph (c) of this AD, oversize the holes specified in Figure 2 of the alert service bulletin, and install bolts in place of the rivets.

Note 3: As specified in British Aerospace Alert Service Bulletin 53–A–PM5994, Issue 4, dated August 23, 1996, and Issue 5, dated April 18, 1997, the procedures for the eddy current inspection necessitate removal of the bolts from the holes specified in Figure 2 of the alert service bulletin.

(c) If any crack is found during any inspection required by paragraph (a) or (b) of this AD, prior to further flight, accomplish the requirements of paragraph (c)(1), (c)(2), or (c)(3) of this AD, as applicable.

(1) For cracking of the joint strap, doubler, or angle at the sill joint at station 82.5: Replace the cracked part with a new part in accordance with British Aerospace Alert Service Bulletin 53–A–PM5994, Issue 3, dated April 8, 1993; Issue 4, dated August 23, 1996; or Issue 5, dated April 18, 1997. After the effective date of this AD, only Issue 5 shall be used.

(2) For cracking of the frame at station 113: Repair in accordance with a method approved by either the Manager, International Branch, ANM–116, FAA, Transport Airplane Directorate, or the Civil Aviation Authority (or its delegated agent).

(3) For cracking of the frame at station 160.5: Repair in accordance with the Structural Repair Manual, as specified in British Aerospace Alert Service Bulletin 53–A–PM5994, Issue 3, dated April 8, 1993; Issue 4, dated August 23, 1996; or Issue 5, dated April 18, 1997. After the effective date of this AD, only Issue 5 shall be used.

Alternative Methods of Compliance

(d) An alternative method of compliance or adjustment of the compliance time that provides an acceptable level of safety may be used if approved by the Manager, International Branch, ANM–116. Operators shall submit their requests through an appropriate FAA Principal Maintenance Inspector, who may add comments and then send it to the Manager, International Branch, ANM–116.

Note 4: Information concerning the existence of approved alternative methods of compliance with this AD, if any, may be obtained from the International Branch, ANM–116.

Special Flight Permits

(e) Special flight permits may be issued in accordance with sections 21.197 and 21.199 of the Federal Aviation Regulations (14 CFR 21.197 and 21.199) to operate the airplane to a location where the requirements of this AD can be accomplished.

Incorporation by Reference

(f) The inspections, removal, and replacement shall be done in accordance with British Aerospace Alert Service Bulletin 53–A–PM5994, Issue 3, dated April 8, 1993; British Aerospace Alert Service Bulletin 53–A–PM5994, Issue 4, dated August 23, 1996; or British Aerospace Alert Service Bulletin 53–A–PM5994, Issue 5, dated April 18, 1997.

(1) The incorporation by reference of British Aerospace Alert Service Bulletin 53–A–PM5994, Issue 4, dated August 23, 1996; and British Aerospace Alert Service Bulletin 53–A–PM5994, Issue 5, dated April 18, 1997, is approved by the Director of the Federal Register in accordance with 5 U.S.C. 552(a) and 1 CFR part 51.

(2) The incorporation by reference of British Aerospace Alert Service Bulletin 53–A–PM5994, Issue 3, dated April 8, 1993, as listed in the regulations, was approved previously by the Director of the Federal Register as of April 22, 1996 (61 FR 11534, March 21, 1996).

(3) Copies may be obtained from British Aerospace, Service Support, Airbus Limited, P.O. Box 77, Bristol BS99 7AR, England. Copies may be inspected at the FAA, Transport Airplane Directorate, 1601 Lind Avenue, SW., Renton, Washington; or at the Office of the Federal Register, 800 North Capitol Street, NW., suite 700, Washington, DC.

(g) This amendment becomes effective on April 9, 1999.

Issued in Renton, Washington, on February 23, 1999.

Darrell M. Pederson,

Acting Manager, Transport Airplane Directorate, Aircraft Certification Service.

[FR Doc. 99–5041 Filed 3–4–99; 8:45 am]

BILLING CODE 4910–13–P

DEPARTMENT OF TRANSPORTATION

Federal Aviation Administration

14 CFR Part 39

[Docket No. 96–NM–12–AD; Amendment 39–11058; AD 99–05–10]

RIN 2120–AA64

Airworthiness Directives; Boeing Model 757 Series Airplanes

AGENCY: Federal Aviation Administration, DOT.

ACTION: Final rule.

SUMMARY: This amendment adopts a new airworthiness directive (AD), applicable to certain Boeing Model 757 series airplanes, that requires revising the maintenance program to require verification that a certain shipping container and shipping sleeve assembly were used in shipping the ram air turbine (RAT) deployment actuator. This amendment also requires inspection of the identification plate on the RAT deployment actuator to determine the actuator serial numbers or a records check to determine such information; and repair or replacement of certain RAT deployment actuators, if necessary. This amendment is prompted by reports of certain RAT actuators that failed to deploy upon command due to interference in the actuator locking mechanism caused by damage incurred during shipping of the actuators. Failure of the RAT to deploy, specifically during a dual engine failure, would result in loss of hydraulic power and would adversely affect the continued safe flight and landing of the airplane.

DATES: Effective April 9, 1999.

The incorporation by reference of certain publications listed in the regulations is approved by the Director of the Federal Register as of April 9, 1999.

ADDRESSES: The service information referenced in this AD may be obtained from Boeing Commercial Airplane Group, P.O. Box 3707, Seattle, Washington 98124–2207. This information may be examined at the Federal Aviation Administration (FAA), Transport Airplane Directorate, Rules Docket, 1601 Lind Avenue, SW., Renton, Washington; or at the Office of the Federal Register, 800 North Capitol Street, NW., suite 700, Washington, DC.

FOR FURTHER INFORMATION CONTACT: Sheila I. Mariano, Aerospace Engineer, Systems and Equipment Branch, ANM–130S, FAA, Transport Airplane Directorate, Seattle Aircraft Certification Office (ACO), 1601 Lind Avenue, SW., Renton, Washington 98055–4056 ; telephone (425) 227–2675; fax (425) 227–1181.

SUPPLEMENTARY INFORMATION: A proposal to amend part 39 of the Federal Aviation Regulations (14 CFR part 39) to include an airworthiness directive (AD) that is applicable to certain Boeing Model 757 series airplanes was published as a supplemental notice of proposed rulemaking (NPRM) in the **Federal Register** on October 27, 1997 (62 FR 55540). That action proposed to require revising the FAA-approved maintenance program to require verification that a certain shipping container and shipping sleeve assembly were used in shipping the ram air turbine (RAT) deployment actuator. That action also proposed to require an inspection of the identification plate on the RAT deployment actuator to determine the actuator serial numbers, and repair or replacement of certain RAT deployment actuators, if necessary.

Comment Received

Interested persons have been afforded an opportunity to participate in the making of this amendment. Due consideration has been given to the comments received.

Request To Reference Airplane Maintenance Manual

One commenter requests that the FAA revise paragraph (a) of the proposed AD to allow operators to accomplish the proposed inspection in accordance with the Boeing 757 Airplane Maintenance Manual (AMM). The commenter states that Boeing has revised the AMM to include the procedures specified in Arkwin Industries Service Bulletins 1211233–29–21–4 and 1211233–29–21–3 (which are referenced in the proposed AD as the appropriate sources of service information).

The FAA does not concur. Because AMM's are not FAA-approved and the procedures specified in AMM's vary from operator to operator, there are no assurances that each operator's AMM contains the identical actions required by this AD. The subject inspection must be incorporated into an FAA-approved maintenance program to satisfy the requirements of this AD. Therefore, the FAA finds that no change to the final rule is necessary.

Request To Revise Certain Service Bulletin Revisions

One commenter requests that the FAA require Arkwin Industries, Inc. (the manufacturer of the subject RAT deployment actuator assemblies), to revise Revisions 2 and 3 of Service Bulletin 1211233–29–21–3 to include a detailed step-by-step procedure on how to accomplish the proposed modification. (Service Bulletin 1211–233–29–21–3 is referenced in the proposed AD as the appropriate source of service information for accomplishment of the proposed modification.) The commenter states that **Note 3** of the proposed AD states that ''* * * any FAA-approved facility may modify the unit, provided that it has the appropriate equipment to successfully modify and test the unit. * * *'' However, Revisions 2 and 3 of the referenced service bulletin do not contain any instructions for modification of the RAT actuator, and

the component maintenance manual (CMM) has not been updated by Arkwin to the show the latest changes. This situation makes it impossible for the work associated with the referenced service bulletin to be accomplished by anyone other than Arkwin.

The FAA acknowledges that **Note 3** of the proposed AD does state that any FAA-approved facility may modify the unit. However, since issuance of the supplemental NPRM, the FAA has determined that, because disassembling the unit by using special equipment for the large spring preload and performing the complex acceptance tests required after reassembly are highly specialized tasks, operators may have difficulty performing these tasks such that actuators may be inoperative once assembled. These factors make the modification costly and unfeasible for anyone other than Arkwin to accomplish. Therefore, the FAA has removed the sentence in **Note 3** of the final rule that allows any FAA-approved facility to modify the unit.

Request To Accomplish Inspection Early To Schedule Replacement

One commenter requests that the FAA revise the proposed AD to provide an option that allows operators to campaign their fleets, and schedule the replacement of any suspect actuator within the compliance time of the proposed AD. The commenter suggests that routine drop checks of the RAT be accomplished until the actuator is replaced. The commenter states that providing such an option in the AD would allow for better planning and scheduling of the required work and would increase the efficiency for the removal of the suspect actuators. The commenter also states that it is concerned about the turnaround time capabilities of Arkwin and the feasibility of accomplishing the proposed replacement.

The FAA does not concur with the commenter's request. If an operator finds any discrepant actuator, it must be removed and replaced or repaired prior to further flight. The FAA finds that revising the compliance time from ''prior to further flight'' to 30 months would increase the exposure of affected airplanes to the identified unsafe condition. In developing an appropriate compliance time for this action, the FAA considered not only the degree of urgency associated with addressing the subject unsafe condition, but the availability of required parts and the practical aspect of accomplishing the required replacement/repair within an interval of time that parallels normal scheduled maintenance for the majority of affected operators. The manufacturer has advised that an ample number of required replacement parts will be available for the U.S. fleet within the proposed compliance period. In addition, the FAA finds that routine drop checks do not detect latent failures caused by the damaged lock rods, pins, etc. Therefore, the FAA finds that no change to the final rule is necessary.

Request To Allow a Records Check

One commenter requests that the FAA revise paragraph (b) of the proposed AD to also allow operators to check their records to determine the actuator serial numbers. The commenter contends that it has a data information file on the part and serial numbers of the RAT deployment actuators for its fleet. The FAA concurs. The FAA finds that a records check is an acceptable alternative method of compliance for accomplishing the requirements of paragraph (b) of the final rule. Therefore, the FAA has revised paragraph (b) of the final rule accordingly.

Conclusion

After careful review of the available data, including the comments noted above, the FAA has determined that air safety and the public interest require the adoption of the rule with the changes previously described. The FAA has determined that these changes will neither increase the economic burden on any operator nor increase the scope of the AD.

Cost Impact

There are approximately 631 Boeing Model 757 series airplanes of the affected design in the worldwide fleet. The FAA estimates that 389 airplanes of U.S. registry will be affected by this AD.

The required revision to the FAA-approved maintenance program will take approximately 2 work hours per operator to accomplish, at an average labor rate of $60 per work hour. Based on these figures, the cost impact of this requirement on U.S. operators is estimated to be $120 per operator.

The required inspection and replacement of the RAT deployment actuator will take approximately 4 work hours per airplane, at an average labor rate of $60 per work hour. Required replacement parts will cost approximately $4,832 per airplane. (If the unit is under warranty, the required parts will be provided by the actuator manufacturer at no cost to the operator. If the actuator is returned to the vendor for modification, the charge will be approximately $22.33 per actuator.) Based on these figures, the cost impact of this requirement on U.S. operators is estimated to be between $240 and $5,072 per airplane.

The cost impact figures discussed above are based on assumptions that no operator has yet accomplished any of the requirements of this AD action, and that no operator would accomplish those actions in the future if this AD were not adopted. However, the FAA has been advised that the proposed requirement to replace the RAT deployment actuator [paragraph (b)] has been accomplished previously on approximately 13 airplanes of U.S. registry. Therefore, the future cost impact of this proposed AD on U.S. operators is reduced by approximately $65,936.

Regulatory Impact

The regulations adopted herein will not have substantial direct effects on the States, on the relationship between the national government and the States, or on the distribution of power and responsibilities among the various levels of government. Therefore, in accordance with Executive Order 12612, it is determined that this final rule does not have sufficient federalism implications to warrant the preparation of a Federalism Assessment.

For the reasons discussed above, I certify that this action (1) is not a ''significant regulatory action'' under Executive Order 12866; (2) is not a ''significant rule'' under DOT Regulatory Policies and Procedures (44 FR 11034, February 26, 1979); and (3) will not have a significant economic impact, positive or negative, on a substantial number of small entities under the criteria of the Regulatory Flexibility Act. A final evaluation has been prepared for this action and it is contained in the Rules Docket. A copy of it may be obtained from the Rules Docket at the location provided under the caption **ADDRESSES**.

List of Subjects in 14 CFR Part 39

Air transportation, Aircraft, Aviation safety, Incorporation by reference, Safety.

Adoption of the Amendment

Accordingly, pursuant to the authority delegated to me by the Administrator, the Federal Aviation Administration amends part 39 of the Federal Aviation Regulations (14 CFR part 39) as follows:

PART 39—AIRWORTHINESS DIRECTIVES

1. The authority citation for part 39 continues to read as follows:

Authority: 49 U.S.C. 106(g), 40113, 44701.

§ 39.13 [Amended]

2. Section 39.13 is amended by adding the following new airworthiness directive:

99–05–10 Boeing: Amendment 39–11058. Docket 96–NM–12–AD.

Applicability: Model 757 airplanes; equipped with ram air turbine (RAT) deployment actuators having Boeing part number (P/N) S271N102–4 (Arkwin P/N 1211233–004) or Boeing P/N S271N102–5 (Arkwin P/N 1211233–005), and having a serial number of 00001 and subsequent; certificated in any category.

Note 1: This AD applies to each airplane identified in the preceding applicability provision, regardless of whether it has been modified, altered, or repaired in the area subject to the requirements of this AD. For airplanes that have been modified, altered, or repaired so that the performance of the requirements of this AD is affected, the owner/operator must request approval for an alternative method of compliance in accordance with paragraph (d) of this AD. The request should include an assessment of the effect of the modification, alteration, or repair on the unsafe condition addressed by this AD; and, if the unsafe condition has not been eliminated, the request should include specific proposed actions to address it.

Compliance: Required as indicated, unless accomplished previously.

To prevent the failure of the actuators used to deploy the RAT, accomplish the following:

(a) Within 120 days after the effective date of this AD, revise the FAA-approved maintenance program to require verification that the shipping container and shipping sleeve assembly, as specified in Arkwin Industries Service Bulletin 1211233–29–21–4, Revision 3, dated February 7, 1997, was used in shipping the actuator to a location where it is to be installed.

Note 2: Once the maintenance program has been revised to include the procedures specified in this paragraph, operators are not required to subsequently record accomplishment each time that an actuator is shipped.

(b) Within 30 months after the effective date of this AD, perform an inspection of the identification plate on the deployment actuator of the RAT to determine the actuator serial numbers in accordance with Arkwin Industries Service Bulletin 1211233–29–21–3, Revision 2, dated June 17, 1994, or Revision 3, dated February 7, 1997; or perform a records check of the same area to determine the actuator serial numbers.

(1) If the actuator bears Boeing P/N S271N102–4 (Arkwin P/N 1211233–004) or Boeing P/N S271N102–5 (Arkwin P/N 1211233–005), and has a serial number of 00001 through 00631 inclusive (with no ''B'' suffix): Prior to further flight, remove the RAT deployment actuator and repair or replace it, in accordance with the Arkwin Industries service bulletins previously referenced in paragraph (b) of this AD or in accordance with a method approved by the Manager, Seattle Aircraft Certification Office (ACO), FAA, Transport Airplane Directorate.

Note 3: Arkwin Industries Service Bulletin 1211233–29–21–3, Revision 2, dated June 17, 1994, or Revision 3, dated February 7, 1997, recommends that the actuator unit be returned to Arkwin Industries for modification, since specialized equipment is needed to perform the rework of the unit.

(2) Prior to further flight, remove the RAT deployment actuator and repair or replace it, in accordance with Arkwin Industries Service Bulletin 1211233–29–21–3, Revision 2, dated June 17, 1994, or Revision 3, dated February 7, 1997, if the actuator:

(i) Has Boeing P/N S271N102–4 (Arkwin P/N 1211233–004) or Boeing P/N S271N102–5 (Arkwin P/N 1211233–005); and

(ii) Has a serial number of 00001 through 00631 inclusive, with a suffix letter ''B;'' or has a serial number of 00632 or subsequent; and

(iii) Has been removed previously from an airplane and shipped in the extended position and not in accordance with Arkwin Industries Service Bulletin 1211233–29–21–4, Revision 2, dated June 17, 1994, or Revision 3, dated February 7, 1997.

Note 4: Shipping records or tags may be reviewed to determine whether the actuator was shipped in accordance with Arkwin Industries Service Bulletin 1211233–29–21–4, Revision 2 or Revision 3.

Note 5: Arkwin Industries Service Bulletin 1211233–29–21–4, Revision 2 or Revision 3, provides procedures for proper identification of the necessary reusable shipping container and shipping sleeve assembly that are to be used when transporting or shipping the RAT deployment actuator assembly. Use of this container and sleeve will prevent damage to the assembly during shipping.

(3) No further action is required by paragraph (b) of this AD, if the actuator:

(i) Has Boeing P/N S271N102–4 (Arkwin P/N 1211233–004) or Boeing P/N S271N102–5 (Arkwin P/N 1211233–005); and

(ii) Has a serial number of 00001 through 00631 inclusive, with a suffix letter ''B;'' or has a serial number of 00632 or subsequent; and

(iii) Has not been removed previously from an airplane, or has been removed and shipped in the extended position, in accordance with Arkwin Industries Service Bulletin 1211233–29–21–4, Revision 2, dated June 17, 1994, or Revision 3, dated February 7, 1997.

(c) As of 30 months after the effective date of this AD, no person shall install on any airplane a RAT deployment actuator assembly, having Boeing P/N S271N102–4 (Arkwin P/N 1211233–004) or Boeing P/N S271N102–5 (Arkwin P/N 1211233–005), and having serial number 00001 and subsequent; unless the conditions, as specified in both paragraphs (c)(1) and (c)(2) of this AD apply:

(1) The actuator assembly has been modified (repaired and reidentified) in accordance with Arkwin Industries Service Bulletin 1211233–29–21–3, Revision 2, dated June 17, 1994, or Revision 3, dated February 7, 1997; or the actuator is replaced with a new actuator from Arkwin Industries, Inc.; and

(2) Prior to installation, the actuator was shipped (i.e., to the place where installation is accomplished) in accordance with Arkwin Industries Service Bulletin 1211233–29–21–4, Revision 2, dated June 17, 1994, or Revision 3, dated February 7, 1997.

(d) An alternative method of compliance or adjustment of the compliance time that provides an acceptable level of safety may be used if approved by the Manager, Seattle ACO. Operators shall submit their requests through an appropriate FAA Principal Maintenance Inspector, who may add comments and then send it to the Manager, Seattle ACO.

Note 6: Information concerning the existence of approved alternative methods of compliance with this AD, if any, may be obtained from the Seattle ACO.

(e) Special flight permits may be issued in accordance with sections 21.197 and 21.199 of the Federal Aviation Regulations (14 CFR 21.197 and 21.199) to operate the airplane to a location where the requirements of this AD can be accomplished.

(f) Except as provided in paragraphs (a) and (b)(1) of this AD, the actions shall be done in accordance with Arkwin Industries Service Bulletin 1211233–29–21–3, Revision 2, dated June 17, 1994, or Arkwin Industries Service Bulletin 1211233–29–21–3, Revision 3, dated February 7, 1997. Revision 2 of Arkwin Industries Service Bulletin 1211233–29–21–3 contains the following list of effective pages:

Page No.	Revision level shown on page	Date shown on page
1–3	2	June 17, 1994.
4, 5	1	Dec. 20, 1993.
6	Original ..	July 26, 1993.

This incorporation by reference was approved by the Director of the Federal Register in accordance with 5 U.S.C. 552(a) and 1 CFR part 51. Copies may be obtained from Boeing Commercial Airplane Group, P.O. Box 3707, Seattle, Washington 98124–2207. Copies may be inspected at the FAA, Transport Airplane Directorate, 1601 Lind Avenue, SW., Renton, Washington; or at the Office of the Federal Register, 800 North Capitol Street, NW., suite 700, Washington, DC.

(g) This amendment becomes effective on April 9, 1999.

Issued in Renton, Washington, on February 23, 1999.

Darrell M. Pederson,

Acting Manager, Transport Airplane Directorate, Aircraft Certification Service.

[FR Doc. 99–5040 Filed 3–4–99; 8:45 am]

BILLING CODE 4910–13–P

DEPARTMENT OF TRANSPORTATION

Federal Aviation Administration

14 CFR Part 39

[Docket No. 98–CE–61–AD; Amendment 39–11061; AD 99–05–13]

RIN 2120–AA64

Airworthiness Directives; Raytheon Aircraft Company 17, 18, 19, 23, 24, 33, 35, 36/A36, A36TC/B36TC, 45, 50, 55, 56, 58, 58P, 58TC, 60, 65, 70, 76, 77, 80, 88, and 95 Series Airplanes

AGENCY: Federal Aviation Administration, DOT.

ACTION: Final rule.

SUMMARY: This amendment adopts a new airworthiness directive (AD) that applies to certain Raytheon Aircraft Company (Raytheon) 17, 18, 19, 23, 24, 33, 35, 36/A36, A36TC/B36TC, 45, 50, 55, 56, 58, 58P, 58TC, 60, 65, 70, 76, 77, 80, 88, and 95 series airplanes. This AD requires installing a placard on the fuel tank selector to warn of the no-flow condition that exists between the fuel tank detents. This AD is the result of reports of engine stoppage on the affected airplanes where the cause was considered to be incorrect positioning of the fuel selector. The actions specified by this AD are intended to help prevent a lack of fuel flow to the engine caused by incorrect positioning of the fuel selector, which could result in loss of engine power.

DATES: Effective April 19, 1999.

The incorporation by reference of certain publications listed in the regulations is approved by the Director of the Federal Register as of April 19, 1999.

ADDRESSES: Service information that applies to this AD may be obtained from the Raytheon Aircraft Company, PO Box 85, Wichita, Kansas 67201–0085; telephone: (800) 0625–7043 or (316) 676–4556. This information may also be examined at the Federal Aviation Administration (FAA), Central Region, Office of the Regional Counsel, Attention: Rules Docket No. 98–CE–61–AD, Room 1558, 601 E. 12th Street, Kansas City, Missouri 64106; or at the Office of the Federal Register, 800 North Capitol Street, NW, suite 700, Washington, DC.

FOR FURTHER INFORMATION CONTACT: Mr. Scott West, Aerospace Engineer, Wichita Aircraft Certification Office, FAA, 1801 Airport Road, Mid-Continent Airport, Wichita, Kansas 67209; telephone: (316) 946–4146; facsimile: (316) 946–4407.

SUPPLEMENTARY INFORMATION:

Events Leading to the Issuance of This AD

A proposal to amend part 39 of the Federal Aviation Regulations (14 CFR part 39) to include an AD that would apply to certain Raytheon 17, 18, 19, 23, 24, 33, 35, 36/A36, A36TC/B36TC, 45, 50, 55, 56, 58, 58P, 58TC, 60, 65, 70, 76, 77, 80, 88, and 95 series airplanes was published in the **Federal Register** as a notice of proposed rulemaking (NPRM) on October 9, 1998 (63 FR 54399). The NPRM proposed to require installing a placard, part number 36–920059–1, on the fuel tank selector to warn of the no-flow condition that exists between the fuel tank detents. Accomplishment of the proposed action as specified in the NPRM would be in accordance with Raytheon Mandatory Service Bulletin No. 2670, Revision No. 1, dated May, 1998.

The NPRM was the result of reports of engine stoppage on the affected airplanes where the cause was considered to be incorrect positioning of the fuel selector.

Interested persons have been afforded an opportunity to participate in the making of this amendment. No comments were received on the proposed rule or the FAA's determination of the cost to the public.

The FAA's Determination

After careful review of all available information related to the subject presented above, the FAA has determined that air safety and the public interest require the adoption of the rule as proposed except for minor editorial corrections. The FAA has determined that these minor corrections will not change the meaning of the AD and will not add any additional burden upon the public than was already proposed.

Cost Impact

The FAA estimates that 15,200 airplanes in the U.S. registry will be affected by this AD. The placard that will be required for this AD may be obtained through a Raytheon Aircraft Authorized Service Center at no cost to the owners/operators of the affected airplanes. Since an owner/operator who holds at least a private pilot's certificate as authorized by sections 43.7 and 43.9 of the Federal Aviation Regulations (14 CFR 43.7 and 43.9) may accomplish this placard installation, the only cost impact upon the public will be the approximate 30 minutes it will take each owner/operator to install the placard.

Regulatory Impact

The regulations adopted herein will not have substantial direct effects on the States, on the relationship between the national government and the States, or on the distribution of power and responsibilities among the various levels of government. Therefore, in accordance with Executive Order 12612, it is determined that this final rule does not have sufficient federalism implications to warrant the preparation of a Federalism Assessment.

For the reasons discussed above, I certify that this action (1) is not a ''significant regulatory action'' under Executive Order 12866; (2) is not a ''significant rule'' under DOT Regulatory Policies and Procedures (44 FR 11034, February 26, 1979); and (3) will not have a significant economic impact, positive or negative, on a substantial number of small entities under the criteria of the Regulatory Flexibility Act. A copy of the final evaluation prepared for this action is contained in the Rules Docket. A copy of it may be obtained by contacting the Rules Docket at the location provided under the caption **ADDRESSES**.

List of Subjects in 14 CFR Part 39

Air transportation, Aircraft, Aviation safety, Incorporation by reference, Safety.

Adoption of the Amendment

Accordingly, pursuant to the authority delegated to me by the Administrator, the Federal Aviation Administration amends part 39 of the Federal Aviation Regulations (14 CFR part 39) as follows:

PART 39—AIRWORTHINESS DIRECTIVES

1. The authority citation for part 39 continues to read as follows:

Authority: 49 U.S.C. 106(g), 40113, 44701.

§ 39.13 [Amended]

2. Section 39.13 is amended by adding a new airworthiness directive (AD) to read as follows:

99–05–13 Raytheon Aircraft Company (All type certificates of the affected airplanes previously held by the Beech Aircraft Corporation): Amendment 39–11061; Docket No. 98–CE–61–AD.

Applicability: The following airplane models and serial numbers, certificated in any category:

Model	Serial No.
B17L	all serial numbers.
SB17L	all serial numbers.
B17B	all serial numbers.

Model	Serial No.
B17R (Army UC–43H).	all serial numbers.
C17L (Army UC–43J)	all serial numbers.
SC17L	all serial numbers.
C17B (Army UC–43G).	all serial numbers.
SC17B	all serial numbers.
C17R (Army UC–43E).	all serial numbers.
SC17R	all serial numbers.
D17A (Army UC–43F)	all serial numbers.
D17R (Army UC–43A).	all serial numbers.
D17S (Army UC–43, UC–43B, Navy GB–1, GB–2).	all serial numbers.
SD17S	all serial numbers.
E17B (Army UC–43D	all serial numbers.
SE17B	all serial numbers.
E17L	all serial numbers.
F17D (UC–43C)	all serial numbers.
SF17D	all serial numbers.
G17S	all serial numbers.
D18S	all serial numbers.
E18S	all serial numbers.
E18S–9700	all serial numbers.
G18S	all serial numbers.
G18S–9150	all serial numbers.
H18	all serial numbers.
A23–19	all serial numbers.
19A	all serial numbers.
M19A	all serial numbers.
B19	all serial numbers.
23	all serial numbers.
A23	all serial numbers.
A23A	all serial numbers.
B23	all serial numbers.
C23	all serial numbers.
A23–24	all serial numbers.
A24	all serial numbers.
A24R	all serial numbers.
B24R	all serial numbers.
C24R	all serial numbers.
F33A	CE–290 through CE–1791.
E33C and F33C	CJ–26 through CJ–179.
35	all serial numbers.
35R	all serial numbers.
A35	all serial numbers.
B35	all serial numbers.
C35	all serial numbers.
D35	all serial numbers.
E35	all serial numbers.
F35	all serial numbers.
G35	all serial numbers.
H35	all serial numbers.
J35	all serial numbers.
K35	all serial numbers.
M35	all serial numbers.
N35	all serial numbers.
P35	all serial numbers.
S35	all serial numbers.
V35	all serial numbers.
V35TC	all serial numbers.
V35A	all serial numbers.
V35A–TC	all serial numbers.
V35B	all serial numbers.
V35B–TC	all serial numbers.
36	all serial numbers.
A36	E–185 through E–3046.
A36TC	all serial numbers.
B36TC	EA–242 through EA–591.
45	all serial numbers.
A45	all serial numbers.
D45	all serial numbers.
50	all serial numbers.
B50	all serial numbers.
C50	all serial numbers.
D50	all serial numbers.
D50A	all serial numbers.
D50B	all serial numbers.
D50C	all serial numbers.
D50E	all serial numbers.
E50	all serial numbers.
F50	all serial numbers.
G50	all serial numbers.
H50	all serial numbers.
J50	all serial numbers.
95–55	all serial numbers.
95–A55	all serial numbers.
95–B55	all serial numbers.
95–C55	all serial numbers.
D55	all serial numbers.
E55	all serial numbers.
56TC	all serial numbers.
A56TC	all serial numbers.
58	TH–1 through TH–1798.
58P	all serial numbers.
58TC	all serial numbers.
60	all serial numbers.
A60	all serial numbers.
B60	all serial numbers.
65	all serial numbers.
A65	all serial numbers.
A65–8200	all serial numbers.
70	all serial numbers.
76	all serial numbers.
77	all serial numbers.
65–80	all serial numbers.
65–A80	all serial numbers.
65–B80	all serial numbers.
65–88	all serial numbers.
95	all serial numbers.
B95	all serial numbers.
B95A	all serial numbers.
D95A	all serial numbers.
E95	all serial numbers.

Note 1: This AD applies to each airplane identified in the preceding applicability provision, regardless of whether it has been modified, altered, or repaired in the area subject to the requirements of this AD. For airplanes that have been modified, altered, or repaired so that the performance of the requirements of this AD is affected, the owner/operator must request approval for an alternative method of compliance in accordance with paragraph (d) of this AD. The request should include an assessment of the effect of the modification, alteration, or repair on the unsafe condition addressed by this AD; and, if the unsafe condition has not been eliminated, the request should include specific proposed actions to address it.

Compliance: Required within the next 75 hours time-in-service (TIS) after the effective date of this AD, unless already accomplished.

To prevent a lack of fuel flow to the engine caused by incorrect positioning of the fuel selector, which could result in loss of engine power, accomplish the following:

(a) Install a placard, part number 36–920059–1, on the fuel tank selector to warn of the no-flow condition that exists between the fuel tank detents. Accomplish this installation in accordance with Raytheon Mandatory Service Bulletin No. 2670, Revision No. 1, dated May, 1998.

(b) Installing the placard, as specified in paragraph (a) of this AD, may be performed by the owner/operator holding at least a private pilot certificate as authorized by section 43.7 of the Federal Aviation Regulations (14 CFR 43.7), and must be entered into the aircraft records showing compliance with this AD in accordance with section 43.9 of the Federal Aviation Regulations (14 CFR 43.9).

(c) Special flight permits may be issued in accordance with sections 21.197 and 21.199 of the Federal Aviation Regulations (14 CFR 21.197 and 21.199) to operate the airplane to a location where the requirements of this AD can be accomplished.

(d) An alternative method of compliance or adjustment of the compliance time that provides an equivalent level of safety may be approved by the Manager, Wichita Aircraft Certification Office (ACO), 1801 Airport Road, Room 100, Mid-Continent Airport, Wichita, Kansas 67209. The request shall be forwarded through an appropriate FAA Maintenance Inspector, who may add comments and then send it to the Manager, Wichita ACO.

Note 2: Information concerning the existence of approved alternative methods of compliance with this AD, if any, may be obtained from the Wichita ACO.

(e) The installation required by this AD shall be done in accordance with Raytheon Mandatory Service Bulletin No. 2670, Revision No. 1, dated May, 1998. This incorporation by reference was approved by the Director of the Federal Register in accordance with 5 U.S.C. 552(a) and 1 CFR part 51. Copies may be obtained from the Raytheon Aircraft Company, P.O. Box 85, Wichita, Kansas 67201–0085. Copies may be inspected at the FAA, Central Region, Office of the Regional Counsel, Room 1558, 601 E. 12th Street, Kansas City, Missouri, or at the Office of the Federal Register, 800 North Capitol Street, NW, suite 700, Washington, DC.

(f) This amendment becomes effective on April 19, 1999.

Issued in Kansas City, Missouri, on February 24, 1999.

Marvin R. Nuss,

Acting Manager, Small Airplane Directorate, Aircraft Certification Service.

[FR Doc. 99–5148 Filed 3–4–99; 8:45 am]

BILLING CODE 4910–13–P

DEPARTMENT OF TRANSPORTATION

Federal Aviation Administration

14 CFR Part 71

[Airspace Docket No. 98–ASW–57]

Revision of Class E Airspace; Pampa, TX

AGENCY: Federal Aviation Administration (FAA), DOT.

ACTION: Direct final rule; request for comments.

SUMMARY: This amendment revises Class E airspace at Pampa, TX. The development of global positioning system (GPS) and nondirectional radio beacon (NDB) standard instrument approach procedures (SIAP's) to Perry Lefors Field, Pampa, TX has made this rule necessary. This action is intended to provide adequate controlled airspace extending upward from 700 feet or more above the surface for instrument flight rules (IFR) operations to Perry Lefors Field, Pampa, TX.

DATES: Effective 0901 UTC, July 15, 1999. Comments must be received on or before April 19, 1999.

ADDRESSES: Send comments on the rule in triplicate to Manager, Airspace Branch, Air Traffic Division, Federal Aviation Administration, Southwest Region, Docket No. 98–ASW–57, Fort Worth, TX 76193–0520. The official docket may be examined in the Office of the Regional Counsel, Southwest Region, Federal Aviation Administration, 2601 Meacham Boulevard, Room 663, Fort Worth, TX, between 9:00 a.m. and 3:00 p.m., Monday through Friday, except Federal holidays. An informal docket may also be examined during normal business hours at the Airspace Branch, Air Traffic Division, Federal Aviation Administration, Southwest Region, Room 414, Fort Worth, TX.

FOR FURTHER INFORMATION CONTACT: Donald J. Day, Airspace Branch, Air Traffic Division, Southwest Region, Federal Aviation Administration, Forth, TX 76193–0520, telephone 817–222–5593.

SUPPLEMENTARY INFORMATION:

This amendment to 14 CFR part 71 revises the Class E airspace at Pampa, TX. The development of GPS and NDB SIAP's at Perry Lefors Field, Pampa, TX has made this rule necessary. This action is intended to provide adequate controlled airspace extending upward from 700 feet or more above the surface for instrument flight rules (IFR) operations to Perry Lefors Field, Pampa, TX.

Class E airspace designations are published in Paragraph 6005 of FAA Order 7400.9F, dated September 10, 1998, and effective September 16, 1998, which is incorporated by reference in 14 CFR § 71.1. The Class E airspace designation listed in this document will be published subsequently in the order.

The Direct Final Rule Procedure

The FAA anticipates that this regulation will not result in any adverse or negative comment and therefore is issuing it as a direct final rule. A substantial number of previous opportunities provided to the public to comment on substantially identical actions have resulted in negligible adverse comments or objections. Unless a written adverse or negative comment, or a written notice of intent to submit an adverse or negative comment, is received within the comment period, the regulation will become effective on the date specified above. After the close of the comment period, the FAA will publish a document in the **Federal Register** indicating that no adverse or negative comments were received and confirming the date on which the final rule will become effective. If the FAA does receive, within the comment period, an adverse or negative comment or written notice of intent to submit such a comment, a document withdrawing the direct final rule will be published in the **Federal Register**, and a notice of proposed rulemaking may be published with a new comment period.

Comments Invited

Although this action is in the form of a final rule and was not preceded by a notice of proposed rulemaking, comments are invited on this rule. Interested persons are invited to comment on this rule by submitting such written data, views, or arguments as they may desire. Communications should identify the Rules Docket number and be submitted in triplicate to the address specified under the caption **ADDRESSES**. All communications received on or before the closing date for comments will be considered, and this rule may be amended or withdrawn in light of the comments received. Factual information that supports the commenter's ideas and suggestions is extremely helpful in evaluating the effectiveness of this action and determining whether additional rulemaking action is needed.

Comments are specifically invited on the overall regulatory, economic, environmental, and energy aspects of the rule that might suggest a need to modify the rule. All comments submitted will be available, both before and after the closing date for comments, in the Rules Docket for examination by interested persons. A report that summarizes each FAA public contact concerned with the substance of this action will be filed in the Rules Docket.

Commenters wishing the FAA to acknowledge receipt of their comments submitted in response to this rule must submit a self-addressed, stamped postcard on which the following statement is made: ''Comments to Docket No. 98–ASW–57.'' The postcard will be date stamped with returned to the commenter.

Agency Findings

The regulations adopted herein will not have substantial direct effects on the states, on the relationship between the national government and the states, or on the distribution of power and responsibilities among the various levels of government. Therefore, in accordance with Executive Order 12612, it is determined that this final rule does not have sufficient federalism implications to warrant the preparation of a Federalism Assessment.

Further, the FAA has determined that this regulations is noncontroversial and unlikely to result in adverse or negative comments and only involves an established body of technical regulations that require frequent and routine amendments to keep them operationally current. Therefore, I certify that this regulation (1) is not a ''significant regulatory action'' under Executive Order 12866; (2) is not a ''significant rule'' under DOT Regulatory Policies and Procedures (44 FR 11034; February 26, 1979); and (3) if promulgated, will not have a significant economic impact, positive or negative, on a substantial number of small entities under the criteria of the Regulatory Flexibility Act. Since this rule involves routine matters that will only affect air traffic procedures and air navigation, it does not warrant preparation of a Regulatory Flexibility Analysis because the anticipated impact is so minimal.

List of Subjects in 14 CFR Part 71

Airspace, Incorporation by reference, Navigation (air).

Adoption of the Amendment

Accordingly, pursuant to the authority delegated to me, the Federal Aviation Administration amends 14 CFR part 71 as follows:

PART 71—DESIGNATION OF CLASS A, CLASS B, CLASS C, CLASS D, AND CLASS E AIRSPACE AREAS; AIRWAYS; ROUTES; AND REPORTING POINTS

1. The authority citation for 14 CFR part 71 continues to read as follows:

Authority: 49 U.S.C. 106(g), 40103, 40113, 40120; E.O.10854; 24 FR 9565, 3 CFR 1959–1963 Comp., p. 389.

§ 71.1 [Amended]

2. The incorporation by reference in 14 CFR 71.1 of the Federal Aviation Administration Order 7400.9F, *Airspace Designations and Reporting Points*, dated September 10, 1998, and effective September 16, 1998, is amended as follows:

Paragraph 6005 Class E airspace areas extending upward from 700 feet or more above the surface of the earth.

* * * * *

ASW TX E5 Pampa, TX [Revised]

Pampa, Perry Lefors Field, TX
(Lat. 35°36′47″ N., long. 100°59′47″ W.)
Pampa NDB
(Lat. 35°36′40″ N., long. 100°59′47″ W.)

That airspace extending upward from 700 feet above the surface within a 7.3-mile radius of Perry Lefors Field and within 3 miles each side of the 354° bearing from the Pampa NDB extending from the 7.3-mile radius to 10.1 miles north of the airport.

* * * * *

Issued in Fort Worth, TX, on February 25, 1999.

Albert L. Viselli,

Acting Manager, Air Traffic Division, Southwest Region.

[FR Doc. 99–5391 Filed 3–4–99; 8:45 am]

BILLING CODE 4910–13–M

DEPARTMENT OF TRANSPORTATION

Federal Aviation Administration

14 CFR Part 71

[Airspace Docket No. No. 99–ASW–03]

Establishment of Class E Airspace; Crockett, TX

AGENCY: Federal Aviation Administration (FAA), DOT.

ACTION: Direct final rule; request for comments.

SUMMARY: This amendment establishes Class E airspace at Crockett, TX. The development of two global positioning system (GPS) standard Instrument approach procedures (SIAP), to Houston County Airport, Crockett, TX, has made this rule necessary. This action is intended to provide adequate controlled airspace extending upward from 700 feet or more above the surface for instrument flight rules (IFR) operations to Houston County Airport, Crockett, TX.

DATES: Effective 0901 UTC, July 15, 1999. Comments must be received on or before April 19, 1999.

ADDRESSES: Send comments on the rule in triplicate to Manager, Airspace Branch, Air Traffic Division, Federal Aviation Administration, Southwest Region, Docket No. 99–ASW–03, Fort Worth, TX 76193–0520. The official docket may be examined in the Office of the Regional Counsel, Southwest Region, Federal Aviation Administration, 2601 Meacham Boulevard, Room 663, Fort Worth, TX, between 9:00 a.m. and 3:00 p.m., Monday through Friday, except Federal holidays. An informal docket may also be examined during normal business hours at the Airspace Branch, Air Traffic Division, Federal Aviation Administration, Southwest Region, Room 414, Fort Worth, TX.

FOR FURTHER INFORMATION CONTACT: Donald J. Day, Airspace Branch, Air Traffic Division, Southwest Region, Federal Aviation Administration, Fort Worth, TX 76193–0520, telephone 817–222–5593.

SUPPLEMENTARY INFORMATION:

This amendment to 14 CFR part 71 establishes Class E airspace at Crockett, TX. The development of two GPS SIAP's, to the Houston County Airport, Crockett, TX, has made this rule necessary. This action is intended to provide adequate controlled airspace extending upward from 700 feet or more above the surface for IFR operations to Houston County Airport, Crockett, TX.

Class E airspace designations are published in Paragraph 6005 of FAA Order 7400.9F, dated September 10, 1998, and effective September 16, 1998, which is incorporated by reference in 14 CFR § 71.1. The Class E airspace designation listed in this document will be published subsequently in the order.

The Direct Final Rule Procedure

The FAA anticipates that this regulation will not result in any adverse or negative comment and therefore is issuing it as a direct final rule. A substantial number of previous opportunities provided to the public to comment on substantially identical actions have resulted in negligible adverse comments or objections. Unless a written adverse or negative comment, or a written notice of intent to submit an adverse or negative comment, is received within the comment period, the regulation will become effective on the date specified above. After the close of the comment period, the FAA will publish a document in the **Federal Register** indicating that no adverse or negative comments were received and confirming the date on which the final rule will become effective. If the FAA does receive, within the comment period, an adverse or negative comment or written notice of intent to submit such a comment, a document withdrawing the direct final rule will be published in the **Federal Register**, and a notice of proposed rulemaking may be published with a new comment period.

Comments Invited

Although this action is in the form of a final rule and was not preceded by a notice of proposed rulemaking, comments are invited on this rule. Interested persons are invited to comment on this rule by submitting such written data, views, or arguments as they may desire. Communications should identify the Rules Docket number and be submitted in triplicate to the address specified under the caption **ADDRESSES**. All communications received on or before the closing date for comments will be considered, and this rule may be amended or withdrawn in light of the comments received. Factual information that supports the commenter's ideas and suggestions is extremely helpful in evaluating the effectiveness of this action and determining whether additional rulemaking action is needed.

Comments are specifically invited on the overall regulatory, economic, environmental, and energy aspects of the rule that might suggest a need to modify the rule. All comments submitted will be available, both before and after the closing date for comments, in the Rules Docket for examination by interested persons. A report that summarizes each FAA public contact concerned with the substance of this action will be filed in the Rules Docket.

Commenters wishing the FAA to acknowledge receipt of their comments submitted in response to this rule must submit a self-addressed, stamped postcard on which the following statement is made: ''Comments to Docket No. 99–ASW–03.'' The postcard will be date stamped and returned to the commenter.

Agency Findings

The regulations adopted herein will not have substantial direct effects on the states, on the relationship between the national government and the states, or on the distribution of power and responsibilities among the various levels of government. Therefore, in accordance with Executive Order 12612,

it is determined that this final rule does not have sufficient federalism implications to warrant the preparation of a Federalism Assessment.

Further, the FAA has determined that this regulation is noncontroversial and unlikely to result in adverse or negative comments and only involves an established body of technical regulations that require frequent and routine amendments to keep them operationally current. Therefore, I certify that this regulation (1) is not a ''significant regulatory action'' under Executive Order 12866; (2) is not a ''significant rule'' under DOT Regulatory Policies and Procedures (44 FR 11034; February 26, 1979); and (3) if promulgated, will not have a significant economic impact, positive or negative, on a substantial number of small entities under the criteria of the Regulatory Flexibility Act. Since this rule involves routine matters that will only affect air traffic procedures and air navigation, it does not warrant preparation of a Regulatory Flexibility Analysis because the anticipated impact is so minimal.

List of Subjects in 14 CFR Part 71

Airspace, Incorporation by reference, Navigation (air).

Adoption of the Amendment

Accordingly, pursuant to the authority delegated to me, the Federal Aviation Administration amends 14 CFR part 71 as follows:

PART 71—DESIGNATION OF CLASS A, CLASS B, CLASS C, CLASS D, AND CLASS E AIRSPACE AREAS; AIRWAYS; ROUTES; AND REPORTING POINTS

1. The authority citation for 14 CFR part 71 continues to read as follows:

Authority: 49 U.S.C. 106(g), 40103, 40113, 40120; E.O. 10854; 24 FR 9565, 3 CFR, 1959–1963 Comp., p. 389.

§ 71.1 [Amended]

2. The incorporation by reference in 14 CFR 71.1 of the Federal Aviation Administration Order 7400.9F, *Airspace Designations and Reporting Points*, dated September 10, 1998, and effective September 16, 1998, is amended as follows:

Paragraph 6005 Class E airspace areas extending upward from 700 feet or more above the surface of the earth.

* * * * *

ASW TX E5 Crockett, TX [New]

Houston County Airport, TX
(Lat. 31°18′21″ N., long. 95°24′17″ W.)

That airspace extending upward from 700 feet above the surface within a 6.4-mile radius of Houston County Airport.

* * * * *

Issued in Fort Worth, TX, on February 25, 1999.

Albert L. Viselli,

Acting Manager, Air Traffic Division, Southwest Region.

[FR Doc. 99–5390 Filed 3–4–99; 8:45 am]

BILLING CODE 4910–13–M

SECURITIES AND EXCHANGE COMMISSION

17 CFR Part 240

[Release No. 34–41116, International Series Release No. 1186, File No. S7–15–98]

RIN 3235–AH46

Exemption of the Securities of the Kingdom of Belgium Under the Securities Exchange Act of 1934 for Purposes of Trading Futures Contracts on Those Securities

AGENCY: Securities and Exchange Commission.

ACTION: Final rule.

SUMMARY: The Securities and Exchange Commission is adopting an amendment to Rule 3a12–8 that would designate debt obligations issued by the Kingdom of Belgium as ''exempted securities'' for the purpose of marketing and trading of futures contracts on those securities in the United States. The amendment is intended to permit futures trading on the sovereign debt of Belgium.

EFFECTIVE DATE: March 5, 1999.

FOR FURTHER INFORMATION CONTACT: Joshua Kans, Attorney, Office of Market Supervision (''OMS''), Division of Market Regulation (''Division''), Securities and Exchange Commission (Mail Stop 10–1), 450 Fifth Street, NW, Washington, DC 20549, at 202/942–0079.

SUPPLEMENTARY INFORMATION:

I. Introduction

Under the Commodity Exchange Act (''CEA''), it is unlawful to trade a futures contract on any individual security unless the security in question is an exempted security (other than a municipal security) under the Securities Act of 1933 (''Securities Act'') or the Securities Exchange Act of 1934 (''Exchange Act''). Debt obligations of foreign governments are not exempted securities under either of these statutes. The Securities and Exchange Commission (''SEC'' or ''Commission''), however, has adopted Rule 3a12–8 [1] (''Rule'') under the Exchange Act to designate debt obligations issued by certain foreign governments as exempted securities under the Exchange Act solely for the purpose of marketing and trading futures contracts on those securities in the United States. As amended, the foreign governments currently designated in the Rule are Great Britain, Canada, Japan, Australia, France, New Zealand, Austria, Denmark, Finland, the Netherlands, Switzerland, Germany, the Republic of Ireland, Italy, Spain, Mexico, Brazil, Argentina, and Venezuela (the ''Designated Foreign Governments''). As a result, futures contracts on the debt obligations of these countries may be sold in the United States, as long as the other terms of the Rule are satisfied.

On June 8, 1998, the Commission issued a release proposing to amend Rule 3a12–8 to designate the debt obligations of the Kingdom of Belgium (''Belgium'') as exempted securities, solely for the purpose of futures trading.[2] No comment letters were received in response to the proposal.

The Commission today is adopting this amendment to the Rule, adding Belgium to the list of countries whose debt obligations are exempted by Rule 3a12–8. In order to qualify for the exemption, futures contracts on the debt obligations of Belgium would have to meet all the other existing requirements of the Rule.

II. Background

Rule 3a12–8 was adopted in 1984 [3] pursuant to the exemptive authority in Section 3(a)(12) of the Exchange Act in order to provide a limited exception from the CEA's prohibition on futures overlying individual securities.[4] As originally adopted, the Rule provided that the debt obligations of Great Britain and Canada would be deemed to be exempted securities, solely for the purpose of permitting the offer, sale, and confirmation of ''qualifying foreign

[1] 17 CFR 240.3a12–8.

[2] *See* Securities Exchange Act Release No. 40077 (''Proposing Release'') (June 8, 1998), 63 FR 32628 (June 15, 1998).

[3] *See* Securities Exchange Act Release No. 20708 (''Original Adopting Release'') (March 2, 1984), 49 FR 8595 (March 8, 1984); Securities Exchange Act Release No. 19811 (''Original Proposing Release'') (May 25, 1983), 48 FR 24725 (June 2, 1983).

[4] In approving the Futures Trading Act of 1982, Congress expressed its understanding that neither the SEC nor the Commodity Futures Trading Commission (''CFTC'') had intended to bar the sale of futures on debt obligations of the United Kingdom of Great Britain and Northern Ireland to U.S. persons, and its expectation that administrative action would be taken to allow the sale of such futures contracts in the United States. *See* Original Proposing Release, *supra* note 3, 48 FR at 24725 (citing 128 Cong. Rec. H7492 (daily ed. September 23, 1982) (statements of Representatives Daschle and Wirth)).

futures contracts'' on such securities. The securities in question were not eligible for the exemption if they were registered under the Securities Act or were the subject of any American depositary receipt so registered. A futures contract on the covered debt obligation under the Rule is deemed to be a ''qualifying foreign futures contract'' if the contract is deliverable outside the United States and is traded on a board of trade.[5]

The conditions imposed by the Rule were intended to facilitate the trading of futures contracts on foreign government securities in the United States while requiring offerings of foreign government securities to comply with the federal securities laws. Accordingly, the conditions set forth in the Rule were designed to ensure that, absent registration, a domestic market in unregistered foreign government securities would not develop, and that markets for futures on these instruments would not be used to avoid the securities law registration requirements. In particular, the Rule was intended to ensure that futures on exempted sovereign debt did not operate as a surrogate means of trading the unregistered debt.

Subsequently, the Commission amended the Rule to include the debt securities issued by Japan, Australia, France, New Zealand, Austria, Denmark, Finland, the Netherlands, Switzerland, Germany, Ireland, Italy, Spain, Mexico and, most recently, Brazil, Argentina, and Venezuela.[6]

In 1997, Belfox c.v./s.c. (''Belfox''), the Belgian company recognized as the institution to organize and administer the Belgian Futures and Options Exchange (''BELFOX''), proposed that the Commission amend Rule 3a12–8 to facilitate such trading in futures products based on the sovereign debt of Belgium.[7] At the time, BELFOX listed two futures contracts overlying Belgian public debt securities, and stated that it wished to market and make trading of those products available to U.S. investors.[8]

Belfox subsequently delisted its futures contracts on Belgian sovereign debt, and has stated that it does not presently intend to list any additional futures contracts on Belgian sovereign debt.[9] Belfox has not withdrawn its request, however, and the Belgian Ministry of Finance has expressed the hope that Belgium will be added to the Rule so that Belgian debt securities may form part of the pool of securities that underlie multi-issuer futures contracts traded in Paris on the March a Terme International de France SA (''MATIF'').[10]

The Commission is amending Rule 3a12–8 to add Belgium to the list of countries whose debt obligations are deemed to be ''exempted securities'' under the terms of the Rule. Under this amendment, the existing conditions set forth in the Rule (*i.e.*, that the underlying securities not be registered in the United States, that futures contracts require delivery outside the United States, and that contracts be traded on a board of trade) would continue to apply.

III. Discussion

For the reasons discussed below, the Commission finds that it is consistent with the public interest and the protection of investors that Rule 3a12–8 be amended to include the sovereign debt obligations of Belgium. The Commission believes that the trading of futures contracts on the sovereign debt of Belgium could provide U.S. investors and dealers with a vehicle for hedging the risks involved in holding debt instruments of Belgium, and that the sovereign debt of Belgium should be subject to the same regulatory treatment under the Rule as that of the Designated Foreign Governments.

In the most recent determinations to amend the Rule to include Mexico, Brazil, Argentina, and Venezuela, the Commission considered primarily whether market evidence indicated that an active and liquid secondary trading market exists for the sovereign debt of those countries.[11] Prior to the addition of those countries to the Rule, the Commission considered principally whether the particular sovereign debt had been rated in one of the two highest rating categories[12] by at least two nationally recognized statistical rating organizations (''NRSROs'').[13] The Commission continues to consider the existence of a high credit rating as indirect evidence of an active and liquid

[5] As originally adopted, the Rule required that the board of trade be located in the country that issued the underlying securities. This requirement was eliminated in 1987. *See* Securities Exchange Act Release No. 24209 (March 12, 1987), 52 FR 8875 (March 20, 1987).

[6] As originally adopted, the Rule applied only to British and Canadian government securities. *See* Original Adopting Release, *supra* note 3. In 1986, the Rule was amended to include Japanese government securities. *See* Securities Exchange Act Release No. 23423 (July 11, 1986), 51 FR 25996 (July 18, 1986). In 1987, the Rule was amended to include debt securities by Australia, France and New Zealand. *See* Securities Exchange Act Release No. 25072 (October 29, 1987), 52 FR 42277 (November 4, 1987). In 1988, the Rule was amended to include debt securities issued by Austria, Denmark, Finland, the Netherlands, Switzerland, and West Germany. *See* Securities Exchange Act Release No. 26217 (October 26, 1988), 53 FR 43860 (October 31, 1988). In 1992 the Rule was again amended to (1) include debt securities offered by the Republic of Ireland and Italy, (2) change the country designation of ''West Germany'' to the ''Federal Republic of Germany,'' and (3) replace all references to the informal names of the countries listed in the Rule with references to their official names. *See* Securities Exchange Act Release No. 30166 (January 8, 1992), 57 FR 1375 (January 14, 1992). In 1994, the Rule was amended to include debt securities issued by Spain. *See* Securities Exchange Act Release No. 34908 (October 27, 1994), 59 FR 54812 (November 2, 1994). In 1995, the Rule was amended to include the debt securities of Mexico. *See* Securities Exchange Act Release No. 36530 (November 30, 1995), 60 FR 62323 (December 6, 1995). Finally, in 1996, the Rule was amended to include debt securities issued by Brazil, Argentina, and Venezuela. *See* Securities Exchange Act Release No. 36940 (March 7, 1996), 61 FR 10271 (March 13, 1996).

[7] *See* Letters from Jos Schmitt, President and Chief Executive Officer, Belfox, to Arthur Levitt, Jr., Chairman, Commission, dated June 27, 1997, to Howard L. Kramer, Senior Associate Director, Division, Commission, dated August 29, 1997, and to Howard L. Kramer, Division of Commission, dated February 10, 1998 (collectively ''Belfox petition'').

[8] The marketing and trading of foreign futures contracts is subject to regulation by the CFTC.

[9] *See* Conversation between Jos Schmitt, Belfox, and Joshua Kans, Attorney, Division, Commission, September 28, 1998.

[10] *See* Conversation between Louis de Montpellier, General Advisor, Treasury, Ministry of Finance, Kingdom of Belgium, and Joshua Kans, Attorney, Division, Commission, September 28, 1998.

Each of the multi-issuer sovereign debt futures contracts currently traded on the MATIF has a pool of deliverable securities that contains only the sovereign debt securities of countries designated under the Rule. Should the delivery pool for any sovereign debt futures contract include sovereign debt securities of countries not designated under the Rule, then that contract would not be eligible for marketing or sales to U.S. persons pursuant to the Rule. *See* Letter from Howard Kramer, Senior Special Counsel, Division, Commission, to Philip Bruce, Head of Fixed Income and Money Market Instruments, London International Financial Futures Exchange, dated July 21, 1992.

[11] *See, e.g.*, Securities Exchange Act Release No. 36530 (November 30, 1995), 60 FR 62323 (December 6, 1995) (amending the Rule to add Mexico because the Commission believed that as a whole, the market for Mexican sovereign debt was sufficiently liquid and deep for the purposes of the Rule); Securities Exchange Act Release No. 36940 (March 7, 1996), 61 FR 10271 (March 13, 1996) (amending the Rule to add Brazil, Argentina and Venezuela because the Commission believed that the market for the sovereign debt of those countries was sufficiently liquid and deep for the purposes of the Rule).

[12] The two highest categories used by Moody's Investor Services (''Moody's'') for long-term debt are ''Aaa'' and ''Aa.'' The two highest categories used by Standard and Poor's (''S&P'') for long-term debt are ''AAA'' and ''AA.''

[13] *See, e.g.*, Securities Exchange Act Release No. 30166 (January 6, 1992) 57 FR 1375 (January 14, 1992) (amending the Rule to include debt securities issued by Ireland and Italy—Ireland's long-term sovereign debt was rated Aa3 by Moody's and AA– by S&P, and Italy's long-term sovereign debt was rated Aaa by Moody's and AA+ by S&P); and Securities Exchange Act Release No. 34908 (October 27, 1994), 59 FR 54812 (November 2, 1994) (amending the Rule to include Spain, which had long-term debt ratings of Aa2 from Moody's and AA from S&P).

secondary trading market,[14] as well as considering trading data as evidence of an active and liquid secondary trading market for the security, when determining whether to include a sovereign issuer in the list of Designated Foreign Governments.

Belgium meets the debt rating standard, by being rated in one of the two highest rating categories by two NRSROs.[15] Moreover, trading data also indicates that an active and liquid trading market for Belgian issued debt instruments exists. Belfox and the Ministry of Finance have provided data about the Belgian public debt[16] and the market for Linear bonds (''Obligations Linéaires—Lineaire Obligaties'' or ''OLOs''), which comprise a major portion of the Belgian public debt.[17] That data demonstrates active trading in the market for Belgian OLOs. The total value traded in OLOs on an annual basis was equivalent to approximately US$1.89 trillion in 1997, US$1.86 trillion in 1996, US$1.70 trillion in 1995, and US$1.30 trillion in 1994. The average value traded in OLOs on a daily basis was equivalent to approximately US$7.60 billion in 1997, US$7.44 billion in 1996, US$6.79 billion in 1995, and US$5.23 billion in 1994. The average number of trades on a daily basis involving OLOs was approximately 472, 571, 614, and 636 for 1997, 1996, 1995 and 1994, respectively.[18] The Commission finds that this trading data, coupled with a high debt rating, provides sufficient evidence that there exists an active and liquid market for Belgian sovereign debt.

IV. Costs and Benefits of the Proposed Amendments

The Commission believes that the amendment offers potential benefits for U.S. investors, with no direct costs. As stated above, the amendment will allow U.S. and foreign boards of trade to offer in the United States, and U.S. investors to trade, futures contracts on the debt obligations of Belgium. The trading of futures on the sovereign debt of Belgium should provide U.S. investors with a vehicle for hedging the risks involved in the trading of the underlying sovereign debt of Belgium.[19] The Commission does not anticipate that the amendment will result in any direct cost for U.S. investors or others because the amendment will impose no recordkeeping or compliance burdens, and merely would provide a limited purpose exemption under the federal securities laws. The restrictions imposed under the amendment are identical to the restrictions currently imposed under the terms of the Rule and are designed to protect U.S. investors.

V. Effects of the Proposed Amendment on Competition, Efficiency and Capital Formation, and Other Findings

Section 23(a)(2) of the Exchange Act[20] requires the Commission, in adopting rules under the Exchange Act, to consider the competitive effects of such rules, if any, and to refrain from adopting a rule that would impose a burden on competition not necessary or appropriate in furthering the purposes of the Exchange Act. Moreover, Section 3 of the Exchange Act[21] as amended by the National Securities Markets Improvement Act of 1996[22] provides that whenever the Commission is engaged in a rulemaking and is required to consider or determine whether an action is necessary or appropriate in the public interest, the Commission shall consider, in addition to the protection of investors, whether the action will promote efficiency, competition and capital formation.

The Commission has considered the amendment to the Rule in light of the standards cited in Sections 3 and 23(a)(2), and the Commission believes that adoption of the amendment will not impose any burden on competition not necessary or appropriate in furtherance of the purposes of the Exchange Act. As stated above, the amendment is designed to assure the lawful availability in this country of futures contracts on the government debt of Belgium that otherwise would not be permitted to be marketed under the terms of the CEA. The amendment thus serves to expand the range of financial products available in the United States and enhances competition in financial markets. The Commission has considered the amendment's impact on

---

[14] *See, e.g.*, Securities Exchange Act Release No. 36213 (September 11, 1995), 60 FR 48078 (September 18, 1995) (proposal to add Mexico to list of countries encompassed by rule); Securities Exchange Act Release No. 24428 (May 5, 1987), 52 FR 18237 (May 14, 1987) (proposed amendment, which was not implemented, that would have extended the rule to encompass all countries rated in one of the two highest categories by at least two NRSROs).

[15] Moody's has assigned Belgium long-term local currency and long-term foreign currency credit ratings of Aa1. S&P has assigned Belgium long-term local currency and long-term foreign-currency credit ratings of AA+.

The Belgian public debt is principally denominated in Belgian francs (''BEF''). The portion of Belgian public debt denominated in foreign currencies was 8.0% in 1997, 7.6% in 1996, 11.4% in 1995 and 14.5% in 1994. *See Public Debt: Annual Report 1997*, Ministry of Finance, Kingdom of Belgium, April 1998, at 13 (''*Public Debt 1997*''); *Public Debt: Annual Report 1996*, Ministry of Finance, Kingdom of Belgium, April 1997, at 13 (''*Public Debt 1996*''); *Public Debt: Annual Report 1995*, Ministry of Finance, Kingdom of Belgium, May 1996, at 13 (''*Public Debt 1995*'').

The Belgian Ministry of Finance has stated that all ''dematerialized'' Belgian public debt (*i.e.*, debt that is not held in a tangible form) denominated in Belgian francs would be redenominated into euros on January 1, 1999. *See Public Debt 1997* at 26.

[16] Belgian public debt is comprised of government bonds, Treasury bills and various debt instruments of lesser importance, such as road fund loans, and municipal and provincial loans. See Belfox petition, *supra* note 7.

The amount of Belgian public debt outstanding was equivalent to approximately US$264.31 billion as of December 31, 1997, approximately US$258.92 billion at the end of 1996, approximately US$256.86 billion at the end of 1995, and approximately US$251.64 billion at the end of 1994. *See Public Debt 1997* at 12; *Public Debt 1996* at 12; *Public Debt 1995* at 12. All U.S. dollar equivalents set forth here are based on the conversion rate of BEF 37.10 for US$1.00 in effect as of December 31, 1997.

By comparison, the last four countries to be added to the list of Designated Foreign Governments—Mexico, Brazil, Argentina and Venezuela—had lower amounts of public debt. *See* Securities Exchange Act Release No. 36530 (December 6, 1995), 60 FR 62323 (December 6, 1995) (outstanding Mexican government debt amounted to approximately US$87.5 billion face value as of March 31, 1995); Securities Exchange Act Release No. 36940 (March 7, 1996), 61 FR 10271 (March 13, 1996) (public and publicly guaranteed debt of Brazil, Argentina and Venezuela amounted to approximately US$86 billion, US$55 billion and US$74 billion, respectively, as of December 31, 1993).

[17] OLOs, which are issued by means of a price auction system, have maturities ranging from 1 to 30 years and are available with fixed or variable interest rate payments. Only those holding a Linear bond account with the National Bank of Belgium may participate in the auction for these bonds. OLOs are traded on the Brussels Stock Exchange and over the counter. OLOs do not exist physically, but appear as entries in an electronic register held by the National Bank of Belgium. *See The Financial Products of the Belgian Treasury*, The Treasury, Kingdom of Belgium, September 1998, at 12–17; Belfox petition, *supra* note 7.

OLOs represented 54.3% percent of the total amount of Belgian public debt outstanding in 1997, 53.6% in 1996, 50.6% in 1995 and 44.6% in 1994. The amount of OLOs outstanding was equivalent to approximately US$143.50 billion at the end of 1997, US$138.79 billion at the end of 1996, US$130.01 billion at the end of 1995, and US$112.27 billion at the end of 1994. *See Public Debt 1997* at 12; *Public Debt 1996* at 12; *Public Debt 1995* at 12.

The majority of OLOs are denominated in Belgian francs, with some OLOs issued in the past year denominated in French francs and German marks. All existing OLOs were to be redenominated into euros at the start of 1999. *See Public Debt 1997* at 25–26.

[18] *See Public Debt 1997* at 41; *Public Debt 1996* at 41; *Public Debt 1995* at 41; Belfox petition, *supra* note 7.

[19] There may be significant interest in such futures. For example, the MATIF has estimated that the Euro All Sovereign futures contract, which is one of the multi-issuer futures contracts that would likely include Belgian sovereign debt within the pool of deliverable securities, will have a total trading volume of at least 10,000 lots per day.

[20] 15 U.S.C. 78w(a)(2).

[21] 15 U.S.C. 78c.

[22] Pub. L. 104–290, 110 Stat. 3416 (1996).

efficiency, competition, and capital formation and concludes that it would promote these three objectives, by making available to U.S. investors an additional product to use to hedge the risks associated with the trading of the underlying sovereign debt of Belgium.[23] Insofar as the Rule contains limitations, they are designed to promote the purposes of the Exchange Act by ensuring that futures trading on government securities of Belgium is consistent with the goals and purposes of the federal securities laws by minimizing the impact of the Rule on securities trading and distribution in the United States.

Because the amendment to the Rule is exemptive in nature, the Commission has determined to make the foregoing action effective immediately upon publication in the **Federal Register**.[24]

VI. Administrative Requirements

Pursuant to Section 605(b) of the Regulatory Flexibility Act, 5 U.S.C. 605(h), the Chairman of the Commission has certified in connection with the Proposing Release that this amendment, if adopted, would not have a significant economic impact on a substantial number of small entities. The Commission received no comments on this certification.

The Paperwork Reduction Act does not apply because the amendment does not impose recordkeeping or information collection requirements, or other collections of information which require the approval of the Office of Management and Budget under 44 U.S.C. 3501, *et seq.*

VII. Statutory Basis

The amendment to Rule 3a12–8 is being adopted pursuant to 15 U.S.C. 78a *et seq.*, particularly Sections 3(a)(12) and 23(a), 15 U.S.C. 78c(a)(12) and 78w(a).

List of Subjects in 17 CFR Part 240

Reporting and recordkeeping requirements, Securities.

Text of the Amendment

For the reasons set forth in the preamble, the Commission amends part 240 of chapter II, title 17 of the *Code of Federal Regulations* as follows:

PART 240—GENERAL RULES AND REGULATIONS, SECURITIES EXCHANGE ACT OF 1934

1. The authority citation for part 240 continues to read in part as follows:

Authority: 15 U.S.C. 77c, 77d, 77g, 77j, 77s, 77z–2, 77eee, 77ggg, 77nnn, 77sss, 77ttt, 78c, 78d, 78f, 78i, 78j, 78j–1, 78k, 78k–1, 78l, 78m, 78n, 78o, 78p, 78q, 78s, 78u–5, 78w, 78x, 78*ll*(d), 78mm, 79q, 79t, 80a–20, 80a–23, 80a–29, 80a–37, 80b–3, 80b–4 and 80b–11, unless otherwise noted.

* * * * *

2. Section 240.3a12–8 is amended by removing the word ''or'' at the end of paragraph (a)(1)(xviii), removing the period at the end of paragraph (a)(1)(xix) and adding ''; or'' in its place, and adding paragraph (a)(1)(xx), to read as follows:

§ 240.3a12–8 Exemption for designated foreign government securities for purposes of futures trading.

(a) * * *

(1) * * *

(xx) The Kingdom of Belgium.

* * * * *

Dated: February 26, 1999.

By the Commission.

Margaret H. McFarland,

Deputy Secretary.

[FR Doc. 99–5445 Filed 3–4–99; 8:45 am]

BILLING CODE 8010–01–P

[23] 15 U.S.C. 78f(b).

[24] 5 U.S.C. 553(d).

ENVIRONMENTAL PROTECTION AGENCY

40 CFR Part 180

[OPP–300793; FRL–6059–4]

RIN 2070–AB78

Oxirane, methyl-, polymer with oxirane, mono [2-(2-butoxyethoxy)ethyl]ether; Exemption from the Requirement of a Tolerance

AGENCY: Environmental Protection Agency (EPA).

ACTION: Final rule.

SUMMARY: This regulation establishes an exemption from the requirement of a tolerance for residues of the oxirane, methyl-, polymer with oxirane, mono [2-(2-butoxyethoxy)ethyl]ether when used as inert ingredients applied/used as dispersant, emulsifier, surfactant, or adjuvant. ICI Surfactants submitted a petition to EPA under the Federal Food, Drug, and Cosmetic Act, as amended by the Food Quality Protection Act of 1996 requesting an exemption from the requirement of a tolerance. This regulation eliminates the need to establish a maximum permissible level for residues of oxirane, methyl-, polymer with oxirane, mono[2-(2-butoxyethoxy)ethyl]ether.

DATES: This regulation is effective March 5, 1999. Objections and requests for hearings must be received by EPA on or before May 4, 1999.

ADDRESSES: Written objections and hearing requests, identified by the docket control number [OPP–300793], must be submitted to: Hearing Clerk (1900), Environmental Protection Agency, Rm. M3708, 401 M St., SW., Washington, DC 20460. Fees accompanying objections and hearing requests shall be labeled ''Tolerance Petition Fees'' and forwarded to: EPA Headquarters Accounting Operations Branch, OPP (Tolerance Fees) and forwarded to: EPA Headquarters Accounting Operations Branch, OPP (Tolerance Fees), P.O. Box 360277M, Pittsburgh, PA 15251. A copy of any objections and hearing requests filed with the Hearing Clerk identified by the docket control number, [OPP–300793], must also be submitted to: Public Information and Records Integrity Branch, Information Resources and Services Division (7502C), Office of Pesticide Programs, Environmental Protection Agency, 401 M St., SW., Washington, DC 20460. In person, bring a copy of objections and hearing requests to Rm. 119, Crystal Mall #2, 1921 Jefferson Davis Hwy., Arlington, VA.

A copy of objections and hearing requests filed with the Hearing Clerk may be submitted electronically by sending electronic mail (e-mail) to: opp-docket@epa.gov. Copies of electronic objections and hearing requests must be submitted as an ASCII file avoiding the use of special characters and any form of encryption. Copies of electronic objections and hearing requests will also be accepted on disks in WordPerfect 5.1/6.1 file format or ASCII file format. All copies of electronic objections and hearing requests must be identified by the docket number [OPP–300793]. No Confidential Business Information (CBI) should be submitted through e-mail. Copies of electronic objections and hearing requests on this rule may be filed online at many Federal Depository Libraries.

FOR FURTHER INFORMATION CONTACT: By mail: Bipin Gandhi, Registration Division (7505C), Office of Pesticide Programs, Environmental Protection Agency, 401 M St., SW., Washington, DC 20460. Office location, telephone number, and e-mail address: Rm. 707A, Crystal Mall #2, 1921 Jefferson Davis Hwy., Arlington, VA, 703–308–8380, e-mail: gandhi.bipin@epa.gov.

SUPPLEMENTARY INFORMATION: In the **Federal Register** of July 28, 1998 (63 FR 40273) (FRL–5799–3), EPA issued a notice pursuant to section 408 of the Federal Food, Drug, and Cosmetic Act (FFDCA), 21 U.S.C. 346a, as amended by the Food Quality Protection Act of

1996 (Pub. L. 104–170) announcing the filing of a pesticide tolerance petition (PP 8E4965) by ICI Surfactants, Concord Plaza, 3411 Silverside Road, P.O.Box 15391, Wilmington, DE 19850–5391. This notice included a summary of the petition prepared by the petitioner ICI Surfactants. There were no comments received in response to the notice of filing.

The petition requested that 40 CFR part 180.1001 (c) and (e) be amended by establishing an exemption from the requirement of a tolerance for residues of oxirane, methyl-, polymer with oxirane, mono[2-(2-butoxyethoxy)ethyl]ether when used as inert ingredients.

I. Background and Statutory Findings

Section 408(b)(2)(A)(i) of the FFDCA allows EPA to establish an exemption from the requirement for a tolerance (the legal limit for a pesticide chemical residue in or on a food) only if EPA determines that the tolerance is ''safe.'' Section 408(b)(2)(A)(ii) defines ''safe'' to mean that ''there is a reasonable certainty that no harm will result from aggregate exposure to the pesticide chemical residue, including all anticipated dietary exposures and all other exposures for which there is reliable information.'' This includes exposure through drinking water and in residential settings, but does not include occupational exposure. Section 408(b)(2)(C) requires EPA to give special consideration to exposure of infants and children to the pesticide chemical residue in establishing a tolerance and to ''ensure that there is a reasonable certainty that no harm will result to infants and children from aggregate exposure to the pesticide chemical residue...''

EPA performs a number of analyses to determine the risks from aggregate exposure to pesticide residues. First, EPA determines the toxicity of pesticides. Second, EPA examines exposure to the pesticide through food, drinking water, and through other exposures that occur as a result of pesticide us in residential settings.

II. Toxicological Profile

Consistent with section 408(b)(2)(D) of FFDCA, EPA has reviewed the available scientific data and other relevant information in support of this action and considered its validity, completeness and reliability and the relationship of this information to human risk. EPA has also considered available information concerning the variability of the sensitivities of major identifiable subgroups of consumers, including infants and children. The nature of the toxic effects caused by oxirane, methyl-, polymer with oxirane, mono[2-(2-butoxyethoxy)ethyl]ether are discussed in this unit:

Oxirane, methyl-, polymer with oxirane, mono[2-(2-butoxyethoxy)ethyl]ether conforms to the definitions of polymer given in 40 CFR 723.250(b) and meets the following criteria that are used to identify low risk polymers:

1. Oxirane, methyl-, polymer with oxirane, mono[2-(2-butoxyethoxy)ethyl]ether is not a cationic polymer, nor is it reasonably anticipated to become a cationic polymer in a natural aquatic environment.

2. Oxirane, methyl-, polymer with oxirane, mono[2-(2-butoxyethoxy)ethyl]ether contains as an integral part of its composition the atomic elements carbon, hydrogen and oxygen.

3. Oxirane, methyl-, polymer with oxirane, mono[2-(2-butoxyethoxy)ethyl]ether does not contain as an integral part of its composition, except as impurities, any elements other than those listed in 40 CFR Section 723.250(d)(2)(ii).

4. Oxirane, methyl-, polymer with oxirane, mono[2-(2-butoxyethoxy)ethyl]ether is not designed, nor is it reasonably anticipated to substantially degrade, decompose or depolymerize.

5. Oxirane, methyl-, polymer with oxirane, mono[2-(2-butoxyethoxy)ethyl]ether is not manufactured or imported from monomers and/or other reactants that are not already included on the TSCA Chemical Substance Inventory or manufactured under an applicable TSCA section 5 exemption.

6. Oxirane, methyl-, polymer with oxirane, mono[2-(2-butoxyethoxy)ethyl]ether is not a water absorbing polymer.

7. The minimum number-average molecular weight of oxirane, methyl-, polymer with oxirane, mono[2-(2-butoxyethoxy)ethyl]ether is 2,500 (in amu). Substances with molecular weights greater than 400 generally are not absorbed through the intact skin, and substances with molecular weights greater than 1,000 generally are not absorbed through the intact gastrointestinal (GI) tract. Chemicals not absorbed through the skin or GI tract generally are incapable of eliciting a toxic response.

8. Oxirane, methyl-, polymer with oxirane, mono[2-(2-butoxyethoxy)ethyl]ether has number average molecular weight of 2,500 (in amu) greater than or equal to 1,000 but less than 10,000 and contains less than 10% oligomeric material below molecular weight 500 and less than 25% oligomeric material below 1,000 molecular weight.

9. Oxirane, methyl-, polymer with oxirane, mono[2-(2-butoxyethoxy)ethyl]ether does not contain any reactive functional groups.

Based on the above information and review of its use, EPA has found that, when used in accordance with good agricultural practice, this ingredient is useful and a tolerance is not necessary to protect the public health. Therefore, EPA proposes that the exemption from the requirement of a tolerance be established for Oxirane, methyl-, polymer with oxirane, mono[2-(2-butoxyethoxy)ethyl]ether as set forth below.

III. Aggregate Exposures

In examining aggregate exposure, FFDCA section 408 directs EPA to consider available information concerning exposures from the pesticide residue in food and all other non-occupational exposures, including drinking water from groundwater or surface water and exposure through pesticide use in gardens, lawns, or buildings (residential and other indoor uses).

IV. Cumulative Effects

Since this polymer conforms and meets the criteria of a polymer under 40 CFR 723.250. The Agency believes that there are no concerns for risks associated with cumulative effects.

V. Determination of Safety for U.S. Population, Infants and Children

1. *U.S. population.* Since this polymer conforms and meets the criteria of a polymer under 40 CFR 723.250, the Agency agrees with ICI that there are no concerns for risks associated with any potential exposure to adults.

2. *Infants and children.* Since this polymer conforms and meets the criteria of a polymer under 40 CFR 723.250, the Agency agrees with with ICI that there are no concerns for risks associated with any potential exposure to infants and children.

Based on the information in this preamble, EPA concludes that there is a reasonable certainty of no harm from aggregate exposure to [oxirane, methyl-, polymer with oxirane, mono[2-(2-butoxyethoxy)ethyl]ether] residues. Accordingly, EPA finds that exempting oxirane, methyl-, polymer with oxirane, mono[2-(2-butoxyethoxy)ethyl]ether from the requirement of a tolerance will be safe.

VI. Other Considerations

Neither the Agency nor the ICI has any information to suggest that oxirane, methyl-, polymer with oxirane, mono[2-(2- butoxyethoxy)ethyl]ether will have an effect on the immune and endocrine systems.

VII. Objections and Hearing Requests

The new FFDCA section 408(g) provides essentially the same process for persons to ''object'' to a regulation for an exemption from the requirement of a tolerance issued by EPA under new section 408(d)and as was provided in the old section 408 and in section 409. However, the period for filing objections is 60 days, rather than 30 days. EPA currently has procedural regulations which governs the submission of objections and hearing requests. These regulations will require some modification to reflect the new law. However, until those modifications can be made, EPA will continue to use those procedural regulations with appropriate adjustments to reflect the new law.

Any person may, by May 4, 1999, file written objections to any aspect of this regulation and may also request a hearing on those objections. Objections and hearing requests must be filed with the Hearing Clerk, at the address given under the ''ADDRESSES'' section (40 CFR 178.20). A copy of the objections and/or hearing requests filed with the hearing clerk should be submitted to the OPP docket for this rulemaking. The objections submitted must specify the provisions of the regulation deemed objectionable and the grounds for the objections (40 CFR 178.25). Each objection must be accompanied by the fee prescribed by 40 CFR 180.33(i). EPA is authorized to waive any fee requirement ''when in the judgement of the Administrator such a waiver or refund is equitable and not contrary to the purpose of this subsection.'' For additional information regarding tolerance objection fee waivers, contact James Tompkins, Registration Division (7505C), Office of Pesticide Programs, Environmental Protection Agency, 401 M St., SW., Washington, DC 20460. Office location, telephone number, and e-mail address: Rm. 239, Crystal Mall #2, 1921Jefferson Davis Hwy., Arlington, VA, (703) 305–5697, tompkins.jim@epa.gov. Requests for waiver of tolerance objection fees should be sent to James Hollins, Information Resources and Services Division (7502C), Office of Pesticide Programs, Environmental Protection Agency, 401 M St., SW., Washington, DC 20460.

If a hearing is requested, the objections must include a statement of the factual issues(s) on which a hearing is requested, the requestor's contentions on such issues, and a summary of any evidence relied upon by the objector (40 CFR 178.27). A request for a hearing will be granted if the Administrator determines that the material submitted shows the following: There is a genuine and substantial issue of fact; there is a reasonable possibility that available evidence identified by the requestor would, if established resolve one or more of such issues in favor of the requestor, taking into account uncontested claims or facts to the contrary; and resolution of the factual issues(s) in the manner sought by the requestor would be adequate to justify the action requested (40 CFR 178.32). Information submitted in connection with an objection or hearing request may be claimed confidential by marking any part or all of that information as CBI. Information so marked will not be disclosed except in accordance with procedures set forth in 40 CFR part 2. A copy of the information that does not contain CBI must be submitted for inclusion in the public record. Information not marked confidential may be disclosed publicly by EPA without prior notice.

VIII. Public Record and Electronic Submissions

EPA has established a record for this regulation under docket control number [OPP–300793] (including any comments and data submitted electronically). A public version of this record, including printed, paper versions of electronic comments, which does not include any information claimed as CBI, is available for inspection from 8:30 a.m. to 4 p.m., Monday through Friday, excluding legal holidays. The public record is located in Room 119 of the Public Information and Records Integrity Branch, Information Resources and Services Division (7502C), Office of Pesticide Programs, Environmental Protection Agency, Crystal Mall #2, 1921 Jefferson Davis Hwy., Arlington, VA.

Objections and hearing requests may be sent by e-mail directly to EPA at: opp-docket@epa.gov.

E-mailed objections and hearing requests must be submitted as an ASCII file avoiding the use of special characters and any form of encryption.

The official record for this regulation, as well as the public version, as described in this unit will be kept in paper form. Accordingly, EPA will transfer any copies of objections and hearing requests received electronically into printed, paper form as they are received and will place the paper copies in the official record which will also include all comments submitted directly in writing. The official record is the paper record maintained at the Virginia address in ''ADDRESSES'' at the beginning of this document.

IX. Regulatory Assessment Requirements

A. Certain Acts and Executive Orders

This final rule establishes an exemption from the tolerance requirement under section 408(d) of the FFDCA in response to a petition submitted to the Agency. The Office of Management and Budget (OMB) has exempted these types of actions from review under Executive Order 12866, entitled *Regulatory Planning and Review* (58 FR 51735, October 4, 1993). This final rule does not contain any information collections subject to OMB approval under the Paperwork Reduction Act (PRA), 44 U.S.C. 3501 *et seq.*, or impose any enforceable duty or contain any unfunded mandate as described under Title II of the Unfunded Mandates Reform Act of 1995 (UMRA) (Pub. L. 104–4). Nor does it require any prior consultation as specficed by Executive Order 12875, entitled *Enhancing the Intergovernmental Partnership* (58 FR 58093, October 28, 1993), or special considerations as required by Executive Order 12898, entitled *Federal Actions to Address Environmental Justice in Minority Populations and Low-Income Populations* (59 FR 7629, February 16, 1994), or require OMB review in accordance with Executive Order 13045, entitled *Protection of Children from Environmental Health Risks and Safety Risks* (62 FR 19885, April 23, 1997).

In addition, since tolerances and exemptions that are established on the basis of a petition under FFDCA section 408(d), such as the exemption in this final rule, do not require the issuance of a proposed rule, the requirements of the Regulatory Flexibility Act (RFA) (5 U.S.C. 601 *et seq.*) do not apply. Nevertheless, the Agency previously assessed whether establishing tolerances, exemptions from tolerances, raising tolerance levels or expanding exemptions might adversely impact small entities and concluded, as a generic matter, that there is no adverse economic impact. The factual basis for the Agency's generic certification for tolerance actions published on May 4, 1981 (46 FR 24950), and was provided to the Chief Counsel for Advocacy of the Small Business Administration.

B. Executive Order 12875

Under Executive Order 12875, entitled *Enhancing the Intergovernmental Partnership* (58 FR 58093, October 28, 1993), EPA may not issue a regulation that is not required by statute and that creates a mandate upon a State, local or tribal government, unless the Federal government provides the funds necessary to pay the direct compliance costs incurred by those governments. If the mandate is unfunded, EPA must provide to OMB a description of the extent of EPA's prior consultation with representatives of affected State, local, and tribal governments, the nature of their concerns, copies of any written communications from the governments, and a statement supporting the need to issue the regulation. In addition, Executive Order 12875 requires EPA to develop an effective process permitting elected officials and other representatives of State, local, and tribal governments ''to provide meaningful and timely input in the development of regulatory proposals containing significant unfunded mandates.''

Today's rule does not create an unfunded Federal mandate on State, local, or tribal governments. The rule does not impose any enforceable duties on these entities. Accordingly, the requirements of section 1(a) of Executive Order 12875 do not apply to this rule.

C. Executive Order 13084

Under Executive Order 13084, entitled *Consultation and Coordination with Indian Tribal Governments* (63 FR 27655, May 19, 1998), EPA may not issue a regulation that is not required by statute, that significantly or uniquely affects the communities of Indian tribal governments, and that imposes substantial direct compliance costs on those communities, unless the Federal government provides the funds necessary to pay the direct compliance costs incurred by the tribal governments. If the mandate is unfunded, EPA must provide OMB, in a separately identified section of the preamble to the rule, a description of the extent of EPA's prior consultation with representatives of affected tribal governments, a summary of the nature of their concerns, and a statement supporting the need to issue the regulation. In addition, Executive Order 13084 requires EPA to develop an effective process permitting elected officials and other representatives of Indian tribal governments ''to provide meaningful and timely input in the development of regulatory policies on matters that significantly or uniquely affect their communities.''

Today's rule does not significantly or uniquely affect the communities of Indian tribal governments. This action does not involve or impose any requirements that affect Indian tribes. Accordingly, the requirements of section 3(b) of Executive Order 13084 do not apply to this rule.

X. Submission to Congress and the Comptroller General

The Congressional Review Act, 5 U.S.C. 801 *et seq.*, as added by the Small Business Regulatory Enforcement Fairness Act of 1996, generally provides that before a rule may take effect, the Agency promulgating the rule must submit a rule report, which includes a copy of the rule, to each House of the Congress and the Comptroller General of the United States. EPA will submit a report containing this rule and other required information to the U.S. Senate, the U.S. House of Representatives and the Comptroller General of the United States prior to publication of the rule in the **Federal Register**. This rule is not a ''major rule'' as defined by 5 U.S.C. 804(2).

List of Subjects in 40 CFR Part 180

Environmental protection, Administrative practice and procedure, Agricultural commodities, Pesticides and pests, Reporting and recordkeeping requirements.

Dated: February 19, 1999.

James Jones,

Director, Registration Division, Office of Pesticide Programs.

Therefore, 40 CFR chapter I is amended as follows:

PART 180–[AMENDED]

1. The authority citation for part 180 continues to read as follows:

Authority: 21 U.S.C. 346a and 371.

2. In § 180.1001, the table in paragraph (c) and (e) is amended by adding alphabetically the following inert ingredient to read as follows:

§ 180.1001 Exemptions from the requirement of a tolerance.

* * * * *

(c) * * *

Inert ingredients	Limits	Uses
* *	* * *	* *
Oxirane, methyl-, polymer with oxirane, mono[2-(2-butoxyethoxy) ethyl]ether CAS Reg. No. 85637-75-8), minimum number average molecular weight (in .amu) 2,500..	15% Max	Emulsifier, dispersant, Surfactant or related adjuvant of surfactant.
* *	* * *	* *

* * * * *

(e) * * *

Inert ingredients	Limits	Uses
* *	* * *	* *
Oxirane, methyl-, polymer with oxirane, mono[2-(2-butoxyethoxy) ethyl]ether CAS Reg. No. 85637-75-8), minimum number average molecular weight (in amu) 2,500..	15% Max	Emulsifier, dispersant, Surfactant or related adjuvant of surfactant.
* *	* * *	* *

[FR Doc. 99–5494 Filed 3–4–99; 8:45 am]
BILLING CODE 6560–50–F

NATIONAL AERONAUTICS AND SPACE ADMINISTRATION

48 CFR Parts 1806, 1819, and 1852

NASA Mentor-Protégé Program

AGENCY: National Aeronautics and Space Administration (NASA).

ACTION: Final rule.

SUMMARY: This is a final rule amending the NASA Federal Acquisition Regulation (FAR) Supplement (NFS) to eliminate the pilot status of the NASA Mentor-Protégé Program and make it consistent with recent FAR changes on evaluation of small disadvantaged business (SDB) participation in acquisitions. Miscellaneous editorial revisions are also made to the Mentor-Protégé coverage. In addition, the rule makes an internal administrative change to redesignate the competition advocate for NASA Headquarters acquisitions.

DATES: This rule is effective March 5, 1999.

ADDRESSES: Tom O'Toole, Code HK, NASA Headquarters, 300 E Street, SW, Washington, DC 20456–0001.

FOR FURTHER INFORMATION CONTACT: Tom O'Toole, (202) 358–0478, e-mail: thomas.otoole@hq.nasa.gov.

SUPPLEMENTARY INFORMATION:

Background

The NASA Mentor-Protégé Program was established as a pilot program in March 1995 to incentivize NASA prime contractors to provide developmental assistance to SDB concerns, Historically Black Colleges and Universities, minority institutions, and women-owned small business concerns. The pilot program has proved successful, and the program will continue indefinitely. However, the FAR has recently been revised to specify the circumstances in which SDB participation may be evaluated in Government acquisitions. Only those SDBs in Standard Industrial Classification Major Groups as determined by the Department of Commerce may be included in the evaluation. The NASA Mentor-Protégé Program addresses evaluation of SDBs, and changes are required to ensure conformance with the FAR.

Impact

Regulatory Flexibility Act

This final rule does not constitute a significant revision within the meaning of FAR 1.501 and Pub. L. 98–577, and publication for comments is not required. However, comments from small entities concerning the affected NFS coverage will be considered in accordance with 5 U.S.C. 610. Such comments may be submitted separately and should cite 5 U.S.C. 601, *et seq.*

Paperwork Reduction Act

The Paperwork reduction Act does not apply because the changes to the NFS do not impose recordkeeping or information collection requirements, or collections of information from offerors, contractors, or members of the public which require the approval of the Office of Management and Budget under 44 U.S.C. 3501, *et seq.*

List of Subjects in 48 CFR Parts 1806, 1819, and 1852

Government procurement.

Tom Luedtke,

Acting Associate Administrator for Procurement.

Accordingly, 48 CFR Parts 1806, 1819, and 1852 are amended as follows:

1. The authority citation for 48 CFR Parts 1806, 1819, and 1852 continues to read as follows:

Authority: 42 U.S.C. 2473(c)(1).

PART 1806—COMPETITION REQUIREMENTS

2. In section 1806.501, paragraph (3) is revised to read as follows:

1806.501 Requirement.

* * * * *

(3) The Headquarters Chief Financial Officer, Code CF, is the competition advocate for the Headquarters contracting activity.

* * * * *

PART 1819—SMALL BUSINESS PROGRAMS

3. Section 1819.7201 is revised to read as follows:

§ 1819.7201 Scope of subpart.

The NASA Mentor-Protégé Program is designed to incentivize NASA prime contractors to assist small disadvantaged business (SDB) concerns, Historically Black Colleges and Universities (HBCUs), minority institutions (MIs), and women-owned small business (WOSB) concerns, in enhancing their capabilities to perform NASA contracts and subcontracts, foster the establishment of long-term business relationships between these entities and NASA prime contractors, and increase the overall number of these entities that receive NASA contract and subcontract awards.

4. In section 1819.7205, paragraphs (c) and (d) are removed, and paragraph (b) is revised to read as follows:

§ 1819.7205 General policy.

* * * * *

(b) The Mentor-Protégé program may be used in cost reimbursement type contracts and contracts that include an award fee incentive. Costs incurred by a mentor to provide the developmental assistance described in 1819.7214 are allowable. Except for cost-plus-award-fee contracts, such proposed costs shall not be included in the cost base used to develop a fee objective or to negotiate fee. On contracts with an award fee incentive, a contractor's Mentor-Protégé efforts shall be evaluated under the award fee evaluations.

5. Section 1819.7206 is revised to read as follows:

§ 1819.7206 Incentives for prime contractor participation.

(a) Proposed mentor-protégé efforts, except for the extent of participation of protégés as subcontractors, shall be evaluated under the Mission Suitability factor as a subfactor or element. The participation of SDB protégés as subcontractors shall be evaluated separately as a Mission Suitability subfactor (see FAR 15.304(c)(4) and 19.1202). The participation of other categories of protégés as subcontractors may be evaluated separately as part of the evaluation of proposed subcontracted efforts.

(b) Under contracts with award fee incentives, approved mentor firms shall be eligible to earn award fee associated with their performance as a mentor by performance evaluation period. For purposes of earning award fee, the mentor firm's performance shall be evaluated against the criteria described in the clause at 1852.219–79, Mentor Requirements and Evaluation. This award fee evaluation shall not include assessment of the contractor's achievement of FAR 52.219–9 subcontracting plan SDB goals or proposed monetary targets for SDB subcontracting (see FAR 19.1203).

6. In section 1819.7209, paragraphs (a)(1) and (b) are revised to read as follows:

§ 1819.7209 Protégé firms.

(a) * * *

(1) An SDB in the SIC Major Groups as determined by the Department of

Commerce (see FAR 19.201(b)), HBCU, MI, or WOSB;

* * * * *

(b) Except for SDBs, a protégé firm may self-certify to a mentor firm that it meets the requirements set forth in paragraph (a) of this section. Mentors may rely in good faith on written representations by potential protégés that they meet the specified eligibility requirements. SDB status eligibility and documentation requirements are determined according to FAR 19.304.

* * * * *

7. In section 1819.7210, paragraph (d) is removed and paragraph (c) is revised to read as follows:

§ 1819.7210 Selection of protégé firms.

* * * * *

(c) The selection of protégé firms by mentor firms may not be protested, except for a protest regarding the size or eligibility status of an entity selected by a mentor to be a protégé. Such protests shall be handled in accordance with FAR 19.703(b). The contracting officer shall notify the Headquarters Office of Small and Disadvantaged Business Utilization (OSDBU) (Code K) of the protest.

8. In section 1819.7214, paragraph (i) is removed and paragraphs (e), (g), and (h) are revised to read as follows:

§ 1819.7214 Developmental assistance.

* * * * *

(e) Advance payments. While a mentor can make advance payments to its protégés who are performing as subcontractors, the mentor will only be reimbursed by NASA for these costs if advance payments have been authorized in accordance with 1832.409–170;

* * * * *

(g) Rent-free use of facilities and/or equipment; and

(h) Temporary assignment of personnel to the protégé for purpose of training.

9. In section 1819.7215, paragraph (b) is revised to read as follows:

§ 1819.7215 Obligation.

* * * * *

(b) Mentor and protégé firms will submit a ''lessons learned'' evaluation to the NASA OSDBU at the conclusion of each NASA contract subject to the approved Mentor-Protégé agreement.

10. In section 1819.7216, paragraphs (a)(2), (a)(3), and (b) are revised to read as follows:

§ 1819.7216 Internal controls.

(a) * * *

(2) Reviewing any semi-annual progress reports submitted by mentors and protégés on protégé development to measure protégé progress against the master plan contained in the approved agreement.

(3) Site visits to NASA installation where mentor-protégé activity is occurring.

(b) NASA may terminate mentor-protégé agreements for good cause and exclude mentor or protégé firms from participating in the NASA program. These actions shall be approved by the NASA OSDBU. NASA shall terminate an agreement by delivering to the contractor a Notice specifying the reason for termination and the effective date. Termination of an agreement does not constitute a termination of the subcontract between the mentor and the protégé. A plan for accomplishing the subcontract effort should the agreement be terminated shall be submitted with the agreement as required in NFS 1819.7213(h).

11. In section 1819.7217, paragraph (c) is revised to read as follows:

§ 1819.7217 Reports.

* * * * *

(c) The NASA technical program manager shall include an assessment of the prime contractor's (mentor's) performance in the Mentor-Protégé Program in a quarterly 'Strengths and Weaknesses' evaluation report. A copy of this assessment will be provided to the OSDBU and the contracting officer.

* * * * *

12. In section 1819.7219, paragraph (a) is revised to read as follows:

§ 1819.7219 Solicitation provision and contract clauses.

(a) The contracting officer shall insert the clause at 1852.219–77, NASA Mentor-Protégé Program, in:

(1) Cost reimbursement solicitations and contracts, or solicitations and contracts with award fee incentives, that include the clause at FAR 52.219–9, Small Business Subcontracting Plan;

(2) Small business set-asides of the contract types in (a)(1) of this section with values exceeding $500,000 ($1,000,000 for construction) that offer subcontracting opportunities.

* * * * *

PART 1852—SOLICITATION PROVISIONS AND CONTRACT CLAUSES

13. In the clause to section 1852.219–77, paragraphs (a), (b) introductory text, and (b)(4) are revised to read as follows:

1852.219–77 NASA Mentor-Protégé program.

* * * * *

NASA Mentor-Protégé Program (March 1999)

(a) Prime contractors, including certain small businesses, are encouraged to participate in the NASA Mentor-Protégé Program for the purpose of providing developmental assistance to eligible protégé entities to enhance their capabilities and increase their participation in NASA contracts.

(b) The Program consists of:

* * * * *

(4) In contracts with award fee incentives, potential for payment of additional fee for voluntary participation and successful performance in the Mentor-Protégé Program.

* * * * *

14. In the clause to section 1852.219–79, paragraphs (b) introductory text, (e), and (f) are revised to read as follows:

1852.219–79 Mentor requirements and evaluation.

* * * * *

Mentor Requirements and Evaluation (March 1999)

* * * * *

(b) NASA will evaluate the contractor's performance on the following factors. If this contract includes an award fee incentive, this assessment will be accomplished as part of the fee evaluation process.

* * * * *

(e) Mentor and protégé firms will submit a ''lessons learned'' evaluation to the NASA OSDBU at the conclusion of the contract. At the end of each year in the Mentor-Protégé Program, the mentor and protégé, as appropriate, will formally brief the NASA Mentor-Protégé program manager, the technical program manager, and the contracting officer during a formal program review regarding Program accomplishments as pertains to the approved agreement.

(f) NASA may terminate mentor-protégé agreements for good cause and exclude mentor or protégé firms from participating in the NASA program. These actions shall be approved by the NASA OSDBU. NASA shall terminate an agreement by delivering to the contractor a Notice specifying the reason for termination and the effective date. Termination of an agreement does not constitute a termination of the subcontract between the mentor and the protégé. A plan for accomplishing the subcontract effort should the agreement be terminated shall be submitted with the agreement as required in NFS 1819.7213(h).

(End of clause)

[FR Doc. 99–5483 Filed 3–4–99; 8:45 am]

BILLING CODE 7510–01–P

NATIONAL AERONAUTICS AND SPACE ADMINISTRATION

48 CFR Part 1815

Waiver of Submission of Cost or Pricing Data for Acquisitions With the Canadian Commercial Corporation and for Small Business Innovation Research Phase II Contracts

AGENCY: Office of Procurement, Contract Management Division, National Aeronautics and Space Administration (NASA).

ACTION: Final rule.

SUMMARY: This rule amends the NASA Federal Acquisition Regulation Supplement (NFS) to provide a class waiver from the FAR 15.403–4 requirement for the submission of cost or pricing data for Small Business Innovation Research (SBIR) program Phase II contracts. A waiver is permitted by FAR 15.403–1(c)(4). The rule also deletes the end date for the existing waiver of the submission of cost or pricing data for acquisitions with the Canadian Commercial Corporation (CCC). In addition, this rule clarifies that assurances of price fairness and reasonableness by the CCC should be relied on, but that contracting officers are to ensure that the appropriate level of information other than cost or pricing data is submitted by subcontractors to perform any required proposal analysis, including a technical analysis and a cost realism analysis.

EFFECTIVE DATE: March 5, 1999.

FOR FURTHER INFORMATION CONTACT: Mr. Joseph Le Cren, NASA Headquarters, Code HK, Washington, DC 20546, telephone: (202) 358–0444, email: joseph.lecren@hq.nasa.gov.

SUPPLEMENTARY INFORMATION:

Background

FAR 15.403–4 requires that cost or pricing data be submitted for contract awards and modifications in excess of $500,000 unless one of the exceptions at FAR 15.403–1(b) apply. One of the exceptions listed there are waivers granted under FAR 15.403–1(c)(4). Waivers may be granted under FAR 15.403–1(c)(4) by the head of the contracting activity if the price can be determined to be fair and reasonable without the submission of cost or pricing data.

NASA SBIR Phase II contract awards, which are generally limited to $600,000, do not meet the FAR 15.403–1(b) adequate price competition, prices set by law or regulation, or commercial item exceptions. However, a class waiver is considered to be in the Government's interest to promote maximum small business participation in the SBIR program and increase the number of small businesses participating in Federal R&D contracts. The Government's payment of fair and reasonable prices under SBIR Phase II contracts is ensured without the submission of cost or pricing data by (i) contracting officers having access to adequate information in the offerors' proposals; (ii) Phase II proposals being subjected to multiple technical reviews; and (iii) contracting officers having the ability under FAR 15.403–5(a)(3) to request information other than cost or pricing data if additional information is needed.

A class waiver for SBIR Phase II contracts would result in consistent practices among NASA centers, thereby eliminating the possible confusion encountered by contractors that deal with more than one center for Phase II contracts. In addition, the value of the cost or pricing data for SBIR Phase II contracts generally has been minimal and has been found to result in delays in awards as the small businesses often cannot provide the data quickly.

The elimination of the end date for the waiver of submission of cost or pricing data from the CCC makes NASA's waiver consistent with the one between the Department of Defense and the CCC. The current rule states that the CCC will provide assurance of the fairness and reasonableness of the proposed prices. This has been interpreted by some to mean that no additional analysis is necessary. The revised rule clarifies that, while this assurance is to be relied on, it may be necessary to obtain information other than cost or pricing data from subcontractors to the CCC in order to perform any required proposal analysis, including a technical analysis and a cost realism analysis.

Impact

Regulatory Flexibility Act

This final rule does not constitute a significant revision within the meaning of FAR 1.501 and Pub. L. 98–577, and publication for public comments is not required. However, comments from small entities concerning the affected NFS subpart will be considered in accordance with 5 U.S.C. 610. Such comments must be submitted separately and should cite 5 U.S.C. 601, *et seq.*

Paperwork Reduction Act

The Paperwork Reduction Act does not apply because the changes to the NFS do not impose recordkeeping or information collection requirements, or collections of information from offerors, contractors, or members of the public which require the approval of the Office of Management and Budget under 44 U.S.C. 3501, *et seq.*

List of Subjects in 48 CFR Part 1815

Government procurement.

Tom Luedtke,

Acting Associate Administrator for Procurement.

Accordingly, 48 CFR Part 1815 is amended as follows:

PART 1815—CONTRACTING BY NEGOTIATION

1. The authority citation for 48 CFR Part 1815 continues to read as follows:

Authority: 42 U.S.C. 2473(c)(1).

2. Section 1815.403–170 is revised to read as follows:

1815.403–170 Waivers of cost or pricing data.

(a) NASA has waived the requirement for the submission of cost or pricing data when contracting with the Canadian Commercial Corporation (CCC). This waiver applies to the CCC and its subcontractors. The CCC will provide assurance of the fairness and reasonableness of the proposed price. This assurance should be relied on; however, contracting officers shall ensure that the appropriate level of information other than cost or pricing data is submitted by subcontractors to support any required proposal analysis, including a technical analysis and a cost realism analysis. The CCC also will provide for follow-up audit activity to ensure that any excess profits are found and refunded to NASA.

(b) NASA has waived the requirement for the submission of cost or pricing data when contracting for Small Business Innovation Research (SBIR) program Phase II contracts. However, contracting officers shall ensure that the appropriate level of information other than cost or pricing data is submitted to determine price reasonableness and cost realism.

[FR Doc. 99–5484 Filed 3–4–99; 8:45 am]

BILLING CODE 7510–01–P

NATIONAL AERONAUTICS AND SPACE ADMINISTRATION

48 CFR Parts 1842 and 1852

Application of Earned Value Management (EVM)

AGENCY: National Aeronautics and Space Administration (NASA).

ACTION: Final rule.

SUMMARY: This final rule changes the NASA FAR Supplement to apply Earned Value Management (EVM) at NASA by establishing NASA-wide clauses and provisions compatible with those used by DoD. Specifically, the change clarifies the role of the Defense Contract Management Command (DCMC) with respect to its responsibility for reviewing earned value management system (EVMS) plans and verifying initial and continuing contractor compliance with NASA and DoD EVMS criteria, and with NASA Policy Directive 9501.3, Earned Value Performance Management, and DoD 5000.2–R.

EFFECTIVE DATE: March 5, 1999.

FOR FURTHER INFORMATION CONTACT: Kenneth A. Sateriale, (202) 358–0491, kenneth.sateriale@hq.nasa.gov.

SUPPLEMENTARY INFORMATION:

Background

EVM is a commonly used performance (i.e. cost, schedule, and technical) measurement tool for program managers in the aerospace industry. NASA and DoD are major customers in the Government sector of the aerospace industry, and cooperate to align their business practices wherever practicable in order to realize cost and resource efficiencies. Therefore, they have collaborated closely over the last several years to align their approaches to the use of EVM. This change completes that alignment process.

A proposed rule was published in the **Federal Register** at 63 FR 63654, November 16, 1998. The revisions in the final rule are based on an analysis of the public comments.

Impact

NASA certifies that this regulation will not have a significant economic impact on a substantial number of small business entities under the Regulatory Flexibility Act (5 U.S.C. 601 *et seq.*) since the changes do no more than align NASA practices with those already in place at DoD, which shares essentially the same industry sector. This final rule does not impose any reporting or recordkeeping requirements subject to the Paperwork Reduction Act.

List of Subjects in 48 CFR Parts 1842 and 1852

Government procurement.

Tom Luedtke,

Acting Associate Administrator for Procurement.

Accordingly, 48 CFR Parts 1842 and 1852 are amended as follows:

1. The authority citation for 48 CFR Parts 1842 and 1852 continues to read as follows:

Authority: 42 U.S.C. 2473(c)(1).

PART 1842—CONTRACT ADMINISTRATION AND AUDIT SERVICES

2. Subpart 1842.3 is added to read as follows:

Subpart 1842.3—Contract Administration Office Functions

1842.302 Contract administration functions. (NASA supplements paragraph (a))

(a) In addition to the responsibilities listed in FAR 42.302(a), responsibility for reviewing earned value management system (EVMS) plans and verifying initial and continuing contractor compliance with NASA and DoD EVMS criteria and conformity with ANSI/EIA Standard 748, Industry Guidelines for EVMS, is normally delegated to DCMC.

3. Subpart 1842.74 is added to read as follows:

Subpart 1842.74—Earned Value Management

1842.7401 Earned Value Management Systems (EVMS).
1842.7402 Solicitation provisions and contract clauses.

Subpart 1842.74—Earned Value Management

1842.7401 Earned Value Management Systems (EVMS).

When an offeror or contractor is required to provide an EVMS plan to the Government in accordance with NASA Policy Directive (NPD) 9501.3, Earned Value Management, the contracting officer shall forward a copy of the plan to the cognizant administrative contracting officer (ACO) to obtain the assistance of the ACO in determining the adequacy of the proposed EVMS plan.

1842.7402 Solicitation provisions and contract clauses.

(a) When the Government requires Earned Value Management, the contracting officer shall insert:

(1) The provision at 1852.242–74, Notice of Earned Value Management System, in solicitations; and

(2) The clause at 1852.242–75, Earned Value Management System, in solicitations and contracts.

(b) The contracting officer shall insert the clause at 1852.242–76, Modified Cost Performance Report, in solicitations and contracts requiring modified cost performance reporting (see NPD 9501.3, Earned Value Management).

(c) The contracting officer shall insert the provision at 1852.242–77, Modified Cost Performance Report Plans, in solicitations for contracts requiring modified cost performance reporting (see NPD 9501.3).

PART 1852—SOLICITATION PROVISIONS AND CONTRACT CLAUSES

4. Sections 1852.242–74, 1852.242–75, 1852.242–76, and 1852.242-77 are added to read as follows:

1852.242–74 Notice of Earned Value Management System.

As prescribed in 1842.7402(a)(1), insert the following provision:

Notice of Earned Value Management System (March 1999)

(a) The offeror shall provide documentation that the cognizantAdministrative Contracting Officer (ACO) has recognized that:

(1) The proposed earned value management system (EVMS) complies with the EVMS criteria of NASA Policy Directive (NPD) 9501.3, Earned Value Management, or DoD 5000.2–R, Mandatory Procedures for Major Defense Acquisition Programs and Major Automated Information Systems Acquisition Programs; or

(2) The company EVM system conforms with the full intentions of the guidelines presented in ANSI/EIA Standard 748, Industry Guidelines for Earned Value Management Systems.

(b) If the offeror proposes to use a system that does not meet the requirements of paragraph (a) of this provision, the successful offeror shall submit a plan for compliance with the NASA EVM criteria as described in NPD 9501.3.

(1) The plan shall—

(i) Describe the EVMS the offeror intends to use in performance of the contract;

(ii) Distinguish between the offeror's existing management system and modifications proposed to meet the criteria;

(iii) Describe the management system and its application in terms of the criteria;

(iv) Describe the proposed procedure for administration of the criteria as applied to subcontractors; and

(v) Provide documentation describing the process and results of any third-party or self-evaluation of the system's compliance with EVMS criteria.

(2) The Government will review the offeror's plan for EVMS before contract award. The offeror shall provide information and assistance as required by the Contracting Officer to support review of the plan.

(c) Offerors shall identify in their proposals the major subcontractors, or major subcontracted efforts if major subcontractors have not been selected, planned for application of EVMS. The prime contractor and the Government shall agree to subcontractors selected for application of EVMS.

(End of Provision)

1852.242–75 Earned Value Management Systems.

As prescribed at 1842.7402(a)(2), insert the following clause:

Earned Value Management System (March 1999)

(a) In the performance of this contract, the Contractor shall use:

(1) An earned value management system (EVMS) that has been recognized by the cognizant Administrative Contracting Officer (ACO) as complying with the criteria provided in NASA Policy Directive 9501.3, Earned Value Management, or DoD 5000.2-R, Mandatory Procedures for Major Defense Acquisition Programs and Major Automated Information Systems Acquisition Programs; or

(2) A company EVMS that the ACO has recognized as conforming with the full intentions of the guidelines presented in ANSI/EIA Standard 748, Industry Guidelines for Earned Value Management Systems.

(b) If, at the time of award, the Contractor's EVMS has not been recognized by the cognizant ACO per paragraph (a) of this clause or the Contractor does not have an existing cost schedule control system (C/SCS) that has been accepted by the Government, the Contractor shall apply the Contractor's EVMS to the contract and be prepared to demonstrate to the ACO that its system complies with the EVMS criteria referenced in paragraph (a) of this clause.

(c) The Government may require integrated baseline reviews. Such reviews shall be scheduled as early as practicable and should be conducted within 180 calendar days after contract award, exercise of significant contract options, or incorporation of major contract modifications. The objective of the integrated baseline review is for the Government and the Contractor to jointly assess areas, such as the Contractor's planning, to ensure complete coverage of the statement of work, logical scheduling of the work activities, adequate resourcing, and identification of inherent risks.

(d) Unless a waiver is granted by the ACO, Contractor proposed EVMS changes require approval of the ACO prior to implementation.

The ACO shall advise the Contractor of the acceptability of such changes within 30 calendar days after receipt of the notice of proposed changes from the Contractor. If the advance approval requirements are waived by the ACO, the Contractor shall disclose EVMS changes to the ACO and provide an information copy to the NASA Contracting Officer at least 14 calendar days prior to the effective date of implementation.

(e) The Contractor agrees to provide access to all pertinent records and data requested by the ACO or a duly authorized representative. Access is to permit Government surveillance to ensure that the EVMS complies, and continues to comply, with the criteria referenced in paragraph (a) of this clause.

(f) The Contractor shall require the subcontractors specified below to comply with the requirements of this clause: (Insert list of applicable subcontractors)

(End of clause)

1852.242–76 Modified Cost Performance Report.

As prescribed in 1842.7402(b), insert the following clause:

Modified Cost Performance Report (March 1999)

(a) The Contractor shall use management procedures in the performance of this contract that provide for:

(1) Planning and control of costs;

(2) Measurement of performance (value for completed tasks); and

(3) Generation of timely and reliable information for the Modified Cost Performance Report (M/CPR).

(b) As a minimum, these procedures must provide for:

(1) Establishing the time-phase budgeted cost of work scheduled (including work authorization, budgeting, and scheduling), the budgeted cost for work performed, the actual cost of work performed, the budget at completion, the estimate at completion, and provisions for subcontractor performance measurement and reporting;

(2) Applying all direct and indirect costs and provisions for use and control of management reserve and undistributed budget;

(3) Incorporating changes to the contract budget base for both Government directed changes and internal replanning;

(4) Establishing constraints to preclude subjective adjustment of data to ensure performance measurement remains realistic. The total allocated budget may exceed the contract budget base only after consultation with the Contracting Officer. For cost-reimbursement contracts, the contract budget base shall exclude changes for cost growth increases, other than for authorized changes to the contract scope; and

(5) Establishing the capability to accurately identify and explain significant cost and schedule variances, both on a cumulative basis and a projected-at-completion basis.

(c) The Contractor may use a cost/schedule control system that has been recognized by the cognizant Administrative Contracting Officer (ACO) as:

(1) Complying with the earned value management system criteria provided in NASA Policy Directive 9501.3, Earned Value Management, or DoD 5000.2–R, Mandatory Procedures for Major Defense Acquisition Programs and Major Automated Information Systems Acquisition Programs; or

(2) Conforming with the full intentions of the guidelines presented in ANSI/EIA Standard 748, Industry Guidelines for Earned Value Management Systems.

(d) The Government may require integrated baseline reviews. Such reviews shall be scheduled as early as practicable and should be conducted within 180 calendar days after contract award, exercise of significant contract options, or incorporation of major modifications. The objective of the integrated baseline review is for the Government and the Contractor to jointly assess areas, such as the Contractor's planning, to ensure complete coverage of the statement of work, logical scheduling of the work activities, adequate resourcing, and identification of inherent risks.

(e) The Contractor shall provide access to all pertinent records, company procedures, and data requested by the ACO, or authorized representative, to:

(1) Show proper implementation of the procedures generating the cost and schedule information being used to satisfy the M/CPR contractual data requirements to the Government; and

(2) Ensure continuing application of the accepted company procedures in satisfying the M/CPR data item.

(f) The Contractor shall submit any substantive changes to the procedures and their impact to the ACO for review.

(g) The Contractor shall require a subcontractor to furnish M/CPR in each case where the subcontract is other than firm-fixed-price, time-and-materials, or labor-hour; is 12 months or more in duration; and has critical or significant tasks related to the prime contract. Critical or significant tasks shall be defined by mutual agreement between the Government and Contractor. Each subcontractor's reported cost and schedule information shall be incorporated into the Contractor's M/CPR.

(End of clause)

1852.242–77 Modified Cost Performance Report Plans.

As prescribed in 1842.7402(c), insert the following provision;

Modified Cost Performance Plans (March 1999)

(a) The offeror shall submit in its proposal a written summary of the management procedures it will establish, maintain, and use in the performance of any resultant contract to comply with the requirements of the clause at 1852.242–76, Modified Cost Performance Report.

(b) The offeror may propose to use a cost/schedule control system that has been recognized by the cognizant Administrative Contracting Officer as:

(1) Complying with the earned value management system criteria of NASA Policy Directive 9501.3, Earned Value Management, or DoD 5000.2–R, Mandatory Procedures for Major Defense Acquisition Programs and Major Automated Information Systems Acquisition Programs; or

(2) Conforming with the full intentions of the guidelines presented in ANSI/EIA Standard 748, Industry Guidelines for Earned Value Management Systems. In such cases, the offeror may submit a copy of the documentation of such recognition instead of the written summary required by paragraph (a) of this provision.

(End of provision)

[FR Doc. 99–5481 Filed 3–4–99; 8:45 am]

BILLING CODE 7510–01–P

DEPARTMENT OF COMMERCE

National Oceanic and Atmospheric Administration

50 CFR Part 285

[I.D. 021299E]

Atlantic Tuna Fisheries; Atlantic Bluefin Tuna

AGENCY: National Marine Fisheries Service (NMFS), National Oceanic and Atmospheric Administration (NOAA), Commerce.

ACTION: Catch limit adjustment.

SUMMARY: Effective January 1, 1999, NMFS adjusted the Atlantic bluefin tuna (BFT) Angling category daily catch limit to one fish from the school, large school, or small medium size class per vessel. Based on recent information regarding catch rates of school BFT off North Carolina and the limited annual quota, NMFS is concerned that fishing opportunities may be curtailed in northern areas. Therefore, NMFS adjusts the daily catch limit for BFT in all areas to one fish per vessel, which may be from the large school or small medium size class. NMFS takes this action to lengthen the fishing season and to ensure reasonable fishing opportunities in all geographic areas without risking overharvest of the annual quota established for the Angling category fishery.

DATES: Effective 1 a.m. local time on March 9, 1999, until December 31, 1999. NMFS will announce any subsequent catch limit adjustments by publication in the **Federal Register**.

FOR FURTHER INFORMATION CONTACT: Sarah McLaughlin, 978–281–9146.

SUPPLEMENTARY INFORMATION: On October 26, 1998, NMFS announced the availability of the draft Fishery Management Plan (FMP) for Atlantic Tunas, Swordfish, and Sharks (63 FR 57093). Information regarding the proposed management of Atlantic tunas under the Highly Migratory Species (HMS) FMP was provided in the preamble to the proposed rule to implement the HMS FMP (64 FR 3154, January 20, 1999) and is not repeated here. The proposed rule to implement the HMS FMP would change the annual Atlantic tunas fishing year to June 1 through May 31.

Until regulations implementing the HMS FMP are final, regulations implemented under the authority of the Atlantic Tunas Convention Act (16 U.S.C. 971 *et seq.*) governing the harvest of BFT by persons and vessels subject to U.S. jurisdiction are found at 50 CFR part 285. Current regulations state that the Atlantic tunas fishing year commences January 1 and ends December 31 annually.

Implementing regulations for the Atlantic tuna fisheries at § 285.24 allow for adjustments to the daily catch limit in order to provide for maximum utilization of the quota spread over the longest possible period of time. The Assistant Administrator for Fisheries, NOAA, may increase or reduce the per angler catch limit for any size class BFT or may change the per angler limit to a per vessel limit or the per vessel limit to a per angler limit.

Effective January 1, 1999, NMFS adjusted the Angling category daily catch limit to one fish from the school, large school, or small medium size class per vessel (63 FR 71792, December 30, 1998). NMFS has recently received information through the North Carolina Harvest Tagging Program that the rate of landings of school BFT is increasing. NMFS is concerned that, if the current harvest rate increases, it is possible a significant portion of the entire Angling category quota might be taken prior to the time that BFT migrate north. In 1996, the Angling category subquotas for large school/small medium BFT and for school BFT off Delaware and states south were filled prematurely due to high catch rates early in the season in southern areas, thus reducing fishing opportunities in northern areas. In early March 1997, NMFS closed the Angling category fishery for school, large school, and small medium BFT in all areas in order to extend fishing opportunities for these size classes in northern fisheries. In 1998, because catch rates were low, NMFS did not need to take such action during the winter fishery.

NMFS is also concerned that the proposed change in the Atlantic tunas fishing year to June through May, in combination with the 1998 Angling category overharvest (preliminary estimates of 1998 landings indicate that the Angling category school BFT subquota was exceeded by approximately 12 mt), may curtail fishing opportunities during the proposed fishing season (i.e., through May 2000).

Given the information regarding catch rates, the public interest in an equitable distribution of landings among fishermen in the Angling category, and the need for scientific data from throughout the species' range, NMFS adjusts the daily catch limit as follows: Each Angling category vessel may retain no more than one BFT from the large school (measuring 47 to less than 59 inches/119 to less than 150 cm) or small medium (measuring 59 to less than 73 inches/150 to less than 185 cm) size class.

As of February 6, 1999, BFT landings reported through the North Carolina Harvest Tagging Program indicate that 98 percent of the Angling category BFT landings by weight and 95 percent of Angling category BFT landings in numbers have measured 47 inches or greater. Because fishing for smaller BFT generally begins in early summer, NMFS does not anticipate that the reduction of the daily catch limit to prohibit the landings of school BFT would adversely affect recreational fishing opportunities prior to the beginning of the proposed fishing year (June 1).

Charter/Headboat category vessels, when engaged in recreational fishing for BFT, are subject to the same rules as Angling category vessels. In addition, anglers aboard permitted vessels may continue to tag and release BFT of all sizes under the NMFS tag-and-release program (50 CFR 285.27). The Angling category trophy fishery for large medium and giant BFT (measuring 73 inches/185 cm or greater) remains open, with a catch limit of one fish per vessel per year.

NMFS will continue to monitor the Angling category fishery closely through the Automated Catch Reporting System and the Large Pelagic Survey. All BFT landed under the Angling category quota outside North Carolina must be reported within 24 hours of landing to the NMFS Automated Catch Reporting System by phoning 1–888–USA-TUNA (1–888–872–8862). In North Carolina, all BFT must be taken to a reporting station to receive a landing tag before removing the fish from the vessel. For information about the North Carolina Harvest Tagging Program, including reporting station locations, call 1–800–338–7804.

Subsequent adjustments to the daily catch limit, as necessary, shall be announced through publication in the **Federal Register**. In addition, anglers may call the Atlantic Tunas Information Line at 1–888–USA-TUNA (888–872–8862) or at 978–281–9305 for updates on quota monitoring and catch limit adjustments.

Classification

This action is taken under 50 CFR 285.24(d)(3) and is exempt from review under E.O. 12866.

Authority: 16 U.S.C. 971 *et seq.*

Dated: March 1, 1999.

Gary C. Matlock,

Director, Office of Sustainable Fisheries, National Marine Fisheries Service.

[FR Doc. 99–5482 Filed 3–2–99; 4:33 pm]

BILLING CODE 3510–22–F

Proposed Rules

Federal Register
Vol. 64, No. 43
Friday, March 5, 1999

This section of the FEDERAL REGISTER contains notices to the public of the proposed issuance of rules and regulations. The purpose of these notices is to give interested persons an opportunity to participate in the rule making prior to the adoption of the final rules.

DEPARTMENT OF TRANSPORTATION

Federal Aviation Administration

14 CFR Part 39

[Docket No. 98–NM–353–AD]

RIN 2120–AA64

Airworthiness Directives; Boeing Model 737–100, –200, –300, –400, and –500 Series Airplanes

AGENCY: Federal Aviation Administration, DOT.

ACTION: Notice of proposed rulemaking (NPRM).

SUMMARY: This document proposes the adoption of a new airworthiness directive (AD) that is applicable to certain Boeing Model 737–100, –200, –300, –400, and –500 series airplanes. This proposal would require modification of certain filter module assemblies of the generator control units (GCU). This proposal is prompted by reports of smoke and occassional fire in the flight compartment as a direct result of a GCU failure. The actions specified by the proposed AD are intended to prevent failure of the filter module assemblies of the GCU's due to overcurrent conditions, which could result in an increased risk of smoke, and/or fire in the flight compartment.

DATES: Comments must be received by April 19, 1999.

ADDRESSES: Submit comments in triplicate to the Federal Aviation Administration (FAA), Transport Airplane Directorate, ANM–114, Attention: Rules Docket No. 98–NM–353–AD, 1601 Lind Avenue, SW., Renton, Washington 98055–4056. Comments may be inspected at this location between 9:00 a.m. and 3:00 p.m., Monday through Friday, except Federal holidays.

The service information referenced in the proposed rule may be obtained from Boeing Commercial Airplane Group, P.O. Box 3707, Seattle, Washington 98124–2207. This information may be examined at the FAA, Transport Airplane Directorate, 1601 Lind Avenue, SW., Renton, Washington.

FOR FURTHER INFORMATION CONTACT: Forrest Keller, Senior Aerospace Engineer, Systems and Equipment Branch, ANM–130S, FAA, Transport Airplane Directorate, Seattle Aircraft Certification Office, 1601 Lind Avenue, SW., Renton, Washington 98055–4056; telephone (425) 227–2790; fax (425) 227–1181.

SUPPLEMENTARY INFORMATION:

Comments Invited

Interested persons are invited to participate in the making of the proposed rule by submitting such written data, views, or arguments as they may desire. Communications shall identify the Rules Docket number and be submitted in triplicate to the address specified above. All communications received on or before the closing date for comments, specified above, will be considered before taking action on the proposed rule. The proposals contained in this notice may be changed in light of the comments received.

Comments are specifically invited on the overall regulatory, economic, environmental, and energy aspects of the proposed rule. All comments submitted will be available, both before and after the closing date for comments, in the Rules Docket for examination by interested persons. A report summarizing each FAA-public contact concerned with the substance of this proposal will be filed in the Rules Docket.

Commenters wishing the FAA to acknowledge receipt of their comments submitted in response to this notice must submit a self-addressed, stamped postcard on which the following statement is made: ''Comments to Docket Number 98–NM–353–AD.'' The postcard will be date stamped and returned to the commenter.

Availability of NPRMs

Any person may obtain a copy of this NPRM by submitting a request to the FAA, Transport Airplane Directorate, ANM–114, Attention: Rules Docket No. 98–NM–353–AD, 1601 Lind Avenue, SW., Renton, Washington 98055–4056.

Discussion

Over the past several years, the FAA has received numerous reports of smoke and occasional fire in the flight compartment of certain Boeing Model 737 series airplanes. Many of these incidents are attributed to an overcurrent condition in the generator control units (GCU), during in-flight operation of the airplane, which resulted from transformer and/or diode failure in the GCU's power supply and exiter field power supply circuits. Failure of these components causes a localized overheat condition in a GCU. Such overcurrent and overheat conditions, if not detected and corrected could result in an increased risk of smoke and/or fire in the flight compartment.

Related Rulemaking

On March 10, 1989, the FAA issued AD 89–07–13, amendment 39–6165 (54 FR 11366, April 28, 1989), applicable to all Boeing Model 737 series airplanes, that requires replacement or modification of certain GCU filter modules. However, this proposed AD would not affect the requirements of that AD.

Explanation of Relevant Service Information

The FAA has reviewed and approved Sundstrand Corporation Service Bulletin SB92–101, Revision 1, dated December 10, 1996, which describes procedures for modification of the filter module assemblies of the GCU's. The modification involves installation of a terminal board with additional fuses and a protection cap. This modification will allow certain fuses to open when an overcurrent condition occurs. Accomplishment of the actions specified in the service bulletin is intended to adequately address the identified unsafe condition.

Explanation of Requirements of Proposed Rule

Since an unsafe condition has been identified that is likely to exist or develop on other products of this same type design, the proposed AD would require accomplishment of the actions specified in the service bulletin described previously, except as discussed below.

Differences Between Proposed Rule and Service Bulletin

Operators should note that, although the service bulletin specifies modification of the GCU's as interim action, pending determination of the

root cause of a GCU failure. The FAA has determined that, for this proposed AD, the modification adequately addresses the identified unsafe condition. Therefore, this proposal is not considered to be interim action.

Cost Impact

There are approximately 2,675 airplanes of the affected design in the worldwide fleet. The FAA estimates that 1,091 airplanes of U.S. registry would be affected by this proposed AD, that it would take approximately 3 work hours per airplane to accomplish the proposed modification, at an average labor rate of $60 per work hour. Required parts would cost approximately $450 per airplane. Based on these figures, the cost impact of the modification proposed by this AD on U.S. operators is estimated to be $687,330, or $630 per airplane.

The cost impact figure discussed above is based on assumptions that no operator has yet accomplished any of the proposed requirements of this AD action, and that no operator would accomplish those actions in the future if this AD were not adopted.

Regulatory Impact

The regulations proposed herein would not have substantial direct effects on the States, on the relationship between the national government and the States, or on the distribution of power and responsibilities among the various levels of government. Therefore, in accordance with Executive Order 12612, it is determined that this proposal would not have sufficient federalism implications to warrant the preparation of a Federalism Assessment.

For the reasons discussed above, I certify that this proposed regulation (1) is not a ''significant regulatory action'' under Executive Order 12866; (2) is not a ''significant rule'' under the DOT Regulatory Policies and Procedures (44 FR 11034, February 26, 1979); and (3) if promulgated, will not have a significant economic impact, positive or negative, on a substantial number of small entities under the criteria of the Regulatory Flexibility Act. A copy of the draft regulatory evaluation prepared for this action is contained in the Rules Docket. A copy of it may be obtained by contacting the Rules Docket at the location provided under the caption **ADDRESSES.**

List of Subjects in 14 CFR Part 39

Air transportation, Aircraft, Aviation safety, Safety.

The Proposed Amendment

Accordingly, pursuant to the authority delegated to me by the Administrator, the Federal Aviation Administration proposes to amend part 39 of the Federal Aviation Regulations (14 CFR part 39) as follows:

PART 39—AIRWORTHINESS DIRECTIVES

1. The authority citation for part 39 continues to read as follows:

Authority: 49 U.S.C. 106(g), 40113, 44701.

§ 39.13 [Amended]

2. Section 39.13 is amended by adding the following new airworthiness directive:

Boeing: Docket 98–NM–353–AD.

Applicability: Model 737–100, –200, –300, –400, and –500 series airplanes equipped with generator control units (GCU) having part numbers as listed in Sundstrand Corporation Service Bulletin SB92–101, Revision 1, dated December 10, 1996; certificated in any category.

Note 1: This AD applies to each airplane identified in the preceding applicability provision, regardless of whether it has been modified, altered, or repaired in the area subject to the requirements of this AD. For airplanes that have been modified, altered, or repaired so that the performance of the requirements of this AD is affected, the owner/operator must request approval for an alternative method of compliance in accordance with paragraph (c) of this AD. The request should include an assessment of the effect of the modification, alteration, or repair on the unsafe condition addressed by this AD; and, if the unsafe condition has not been eliminated, the request should include specific proposed actions to address it.

Compliance: Required as indicated, unless accomplished previously.

To prevent failure of the filter module assemblies of the generator control units (GCU) due to overcurrent conditions, which could result in an increased risk of smoke, and/or fire in the flight compartment, accomplish the following:

(a) Within 2 years after the effective date of this AD, modify the filter module assemblies of the GCU's identified in Sundstrand Corporation Service Bulletin SB92–101, Revision 1, in accordance with paragraph 2.A or 2.B of the Accomplishment Instructions of the service bulletin, as applicable.

(b) Within 2 years after the effective date of this AD, no person shall install on any airplane a GCU type AVZ122 having part number (P/N) 948F458–1 (Boeing P/N 10–61224–11), and type AVZ22C/D having P/N 915F212–4/–5 (Boeing P/N 10–61224–3), unless modified in accordance with this AD.

(c) An alternative method of compliance or adjustment of the compliance time that provides an acceptable level of safety may be used if approved by the Manager, Seattle Aircraft Certification Office (ACO), FAA, Transport Airplane Directorate. Operators shall submit their requests through an appropriate FAA Principal Maintenance Inspector, who may add comments and then send it to the Manager, Seattle ACO.

Note 2: Information concerning the existence of approved alternative methods of compliance with this AD, if any, may be obtained from the Seattle ACO.

(d) Special flight permits may be issued in accordance with sections 21.197 and 21.199 of the Federal Aviation Regulations (14 CFR 21.197 and 21.199) to operate the airplane to a location where the requirements of this AD can be accomplished. Issued in Renton, Washington, on February 26, 1999.

Darrell M. Pederson,

Acting Manager, Transport Airplane Directorate, Aircraft Certification Service.

[FR Doc. 99–5431 Filed 3–4–99; 8:45 am]

BILLING CODE 4910–13–P

SECURITIES AND EXCHANGE COMMISSION

17 CFR Parts 210, 228 and 240

[Release Nos. 33–7649; 34–41118 International Series No. 1187; File No. S7–7–99]

RIN: 3235–AH52

Financial Statements and Periodic Reports for Related Issuers and Guarantors

AGENCY: Securities and Exchange Commission.

ACTION: Proposed rule.

SUMMARY: We are proposing financial reporting rules for issuers and guarantors of guaranteed securities. We also are proposing an exemption from periodic reporting for subsidiary issuers and guarantors of these securities. These proposals would codify, in large part, the positions the staff has developed through Staff Accounting Bulletin No. 53, later interpretations, and the registration statement review process. We intend for these rules to eliminate any uncertainty about which financial statements and periodic reports subsidiary issuers and guarantors must file.

DATES: We must receive your comments on or before May 4, 1999.

ADDRESSES: Please submit comment letters in triplicate to Jonathan G. Katz, Secretary, U.S. Securities and Exchange Commission, Mail Stop 6–9, 450 Fifth Street, N.W., Washington, D.C. 20549. You also may submit comment letters electronically to the following e-mail address: rule-comments@sec.gov. All comment letters should refer to File No. S7–XX–99. If e-mail is used, include this file number on the subject line. All comments received will be available for public inspection and copying in the Commission's Public Reference Room at the same address. Electronically submitted comments will be posted on

the Commission's Internet web site (http://www.sec.gov).

FOR FURTHER INFORMATION CONTACT: Regarding proposed Rule 12h-5, Michael Hyatte, Julie Hoffman, or Kristina Schillinger at (202) 942–2900; regarding the Regulation S–X and Regulation S–B proposals, Craig Olinger at (202) 942–2960, both in the Division of Corporation Finance.

SUPPLEMENTARY INFORMATION: We are proposing amendments to Rule 3–10 [1] of Regulation S–X [2] and Item 310 of Regulation SB.[3] We are also proposing new Rule 3–16 [4] of Regulation S–X and new Rule 12h–5 [5] under the Securities Exchange Act of 1934.[6]

I. Executive Summary

Over the past two decades, it has become increasingly common for a parent company to raise capital through:

- Offerings of its own securities that are guaranteed by one or more of its subsidiaries; and
- Offerings of securities by a subsidiary that are guaranteed by the parent, and sometimes, one or more of the parent's other subsidiaries.

Absent an exemption, the Securities Act of 1933 [7] requires the offering of both the guaranteed security and the guarantee to be registered. Securities Act registration requires the disclosure of both financial and non-financial information about the issuer of the guaranteed security as well as any guarantors. Moreover, due to the registration of the offer and sale of the guaranteed securities and the guarantees, both the issuer and the guarantors become subject to Section 15(d) [8] of the Exchange Act of 1934. Section 15(d) requires all Securities Act registrants to file Exchange Act periodic reports for at least the fiscal year during which the Securities Act registration statement became effective.

There are circumstances, however, where full Securities Act and Exchange Act disclosure by both the issuer and the guarantors may not be useful to an investment decision and, therefore, may not be necessary. For example, if a subsidiary with no independent assets or operations issues debt securities guaranteed by its parent, full disclosure of the subsidiary's financial information would be of little value. Instead, investors would look to the financial status of the parent which guaranteed the debt to evaluate the likelihood of payment.

As this example demonstrates, subsidiary issuers and guarantors raise a number of practical issues under the Securities Act and the Exchange Act. Included among these issues are:

- What financial information must issuers of guaranteed securities provide to potential investors;
- What financial information must guarantors provide to potential investors; and
- What financial information must those issuers and guarantors continue to provide to the secondary market.

In 1983, the staff addressed these issues in Staff Accounting Bulletin No. 53.[9] In the 15 years since we published SAB 53, guaranteed securities have become significantly more complex. While the basic analysis of SAB 53 remains sound, the staff has had to expand on this analysis in response to registration statements and interpretive requests that involve new and complex offering structures. In addition, the staff has responded to an increasing number of requests for exemptions from Exchange Act reporting. In 1997, nearly half of all interpretive, no-action, or exemptive requests acted on by the Division of Corporation Finance involved SAB 53.

The staff's interpretive structure has been effective in addressing these issues. This approach was designed to properly balance the issuer's obligation to disclose material information fully with the investor's need for this information. We believe that the staff's analysis will adapt well to future developments.

Therefore, we propose to codify, in large part, the staff's current analysis regarding the obligations of issuers and guarantors. We believe these rule proposals are needed because they would:

- Eliminate uncertainty regarding financial statement requirements;
- Eliminate uncertainty regarding on-going reporting;
- Eliminate the burden on these subsidiaries to seek interpretive guidance regarding these requirements; [10] and
- Simplify the staff's interpretive structure by applying one standard condensed consolidating financial information instead of the current approach that requires more or less financial disclosure based solely on the existence of non-guarantor subsidiaries.

We propose to revise Rule 3–10 of Regulation S–X to require condensed consolidating financial information in all situations involving a subsidiary issuer or subsidiary guarantor that is not a finance subsidiary.[11] This condensed financial information would be included in Securities Act registration statements on a combined basis, instead of being presented in separate financial statements for each subsidiary. We also propose Exchange Act Rule 12h–5, which would exempt from Exchange Act reporting requirements those subsidiary issuers and guarantors that may omit financial statements under revised Rule 3–10.

II. The Structure of This Release

We have separated this release into five main sections.

First, we describe how the Securities Act registration requirements apply to offerings of guaranteed securities.

Second, we describe the current financial statement requirements for issuers of guaranteed securities and guarantors. This description begins with the basic requirements of Regulation S–X and addresses the purpose and effect of SAB 53. It also discusses the positions the staff has taken in interpreting basic issues regarding SAB 53, such as the meaning of ''wholly owned subsidiary'' and ''full and unconditional guarantee.'' [12] Finally, we present the developments in the staff's analysis that deal with complex securities and complex corporate structures.

Third, we describe the Exchange Act reporting obligations of subsidiary issuers of guaranteed securities and guarantors. This description addresses the statutory requirement of Section 15(d), the SAB 53 discussion regarding Exchange Act reporting, and the staff's current analysis.

Fourth, we describe our rule proposals regarding the financial

[1] 17 CFR 210.3–10.

[2] 17 CFR 210.1–01 through 12–29.

[3] 17 CFR 228.310.

[4] 17 CFR 210.3–16.

[5] 17 CFR 240.12h–5.

[6] 15 U.S.C. 78a *et seq.*

[7] 15 U.S.C. 77a *et seq.*

[8] 15 U.S.C. 78o(d).

[9] Securities Act Release No. SAB–53. 48 FR 28230 (June 13, 1983).

[10] If we adopt today's proposals, issuers of guaranteed securities and guarantors could still request an interpretive position from the Division of Corporation Finance if proposed Rule 3–10 does not address their situation.

[11] In connection with the proposed revision to Rule 3–10, we also propose:

New Note 3 to Item 310 of Regulation S–B requiring small business issuers to present financial information in accordance with proposed Rule 3–10 for the fiscal periods they are required to present; and

To move the financial statement requirement of affiliates whose securities collateralize a registered issue from current Rule 3–10 and put it in proposed new Rule 3–16 of Regulation S–X.

[12] This release discusses the meanings of a number of terms, including ''finance subsidiary,'' ''debt security,'' ''wholly-owned subsidiary,'' and ''full and unconditional guarantee,'' in the context of SAB 53 and proposed Rule 3–10. Given the unique purpose of SAB 53 and proposed Rule 3–10, the discussion in this release applies only to today's proposals.

information and Exchange Act reporting requirements for subsidiary issuers of guaranteed securities and guarantors.

Fifth, we include appendices at the end of this release to demonstrate how the proposed rules would apply to a number of different fact patterns. We hope that these appendices will increase your understanding of the proposals and assist you in commenting on them.

III. Securities Act Registration Requirements for Offerings of Guarantees

Guarantees of securities are securities themselves for purposes of the Securities Act. As a result, offers and sales of both the guaranteed security and the guarantee must either be registered under the Securities Act or exempt from registration.

IV. Current Financial Statement Requirements for Subsidiary Guarantors and Subsidiary Issuers of Guaranteed Securities

A. Regulation S–X Requirements

1. Guarantors

Rule 3–10 of Regulation S–X identifies which financial statements guarantors must include in Securities Act registration statements, Exchange Act registration statements, and Exchange Act reports.[13] Rule 3–10 currently requires all guarantors to include the same financial statements they would have to include if they were the issuers of the guaranteed securities. Rule 3–10 applies equally to parent guarantors and subsidiary guarantors.

2. Subsidiary Issuers of Guaranteed Securities

Regulation S–X requires subsidiary issuers of guaranteed securities to file the same financial statements as any other issuer of securities.

B. Modified Financial Statement Requirements in Staff Accounting Bulletin No. 53

1. Purpose and Application of SAB 53

In 1983, in response to questions arising from the increased number of guaranteed securities offerings, the Commission published Staff Accounting Bulletin No. 53. The objective of SAB 53 was to elicit full and fair disclosure regarding issuers and guarantors in a format that was:

- Meaningful to investors; and
- Not unduly burdensome to registrants.

SAB 53 did not amend Rule 3–10 of Regulation S–X. Instead, it described the approach the staff would take in its review of registration statements for two types of offerings of guaranteed debt securities:

- Securities issued by a subsidiary that are guaranteed by the parent of that subsidiary; and
- Securities that are issued by a company and guaranteed by a subsidiary of that company.

SAB 53 and the staff interpretations that followed recognize that there is no need for complete financial statements from both the issuer of the guaranteed security and the guarantor when:

- The issuer is a wholly-owned subsidiary of the parent guarantor; and
- The guarantee is full and unconditional.

In this type of issuer/guarantor relationship, there is a unity of financial risk between the two entities. As a result, the need for separate financial disclosure is removed or reduced. We discuss these two conditions below.

a. Meaning of ''Wholly-Owned'' in SAB 53. A subsidiary is ''wholly-owned'' within the meaning of SAB 53 if all of its voting shares and any outstanding securities convertible into its voting shares are owned, directly or indirectly, by its parent.[14] This meaning differs from the general definition of ''wholly-owned subsidiary'' in Rule 1–02(aa) of Regulation S–X.[15] Regulation S–X regards a subsidiary as wholly-owned if substantially all of its voting shares are held by its parent.[16]

Satisfaction of the stricter requirement under SAB 53 ensures that there is no competing interest to the parent's ownership. Any outside voting interest in the subsidiary breaks the financial unity between the subsidiary and its parent that is needed to justify the special relief granted in SAB 53.

b. Meaning of ''Full and Unconditional Guarantee'' in SAB 53.

(i) Guarantor's Payment Obligations Must be the Same as the Issuer's. A guarantee is ''full and unconditional'' when the payment obligations of the issuer and guarantor are essentially identical. When an issuer fails to make a payment called for by the security, the guarantor is obligated to make the scheduled payment immediately and, if it doesn't, the holder of the security may take legal action directly against the guarantor for payment. A guarantee is not full if the amount of the guarantor's liability is less than the issuer's or, should the issuer default, the guarantor's payment schedule differs from the issuer's payment schedule. There can be no conditions, beyond the issuer's failure to pay, to the guarantor's payment obligation. For example, the holder cannot be required to then exhaust its remedies against the issuer before seeking payment from the guarantor.

(ii) Guarantee Still May be Full and Unconditional Even if it Has a Fraudulent Conveyance ''Savings Clause''. A guarantee can be full and unconditional even if it includes a ''savings'' clause related to bankruptcy and fraudulent conveyance laws. These savings clauses prevent the guarantor from making an otherwise required payment if the money needed to make that payment is first recoverable by other creditors under bankruptcy or fraudulent conveyance laws. However, if any clause places a specific limit on the amount of the guarantor's regular payment obligation to avoid application of bankruptcy or fraudulent conveyance laws, it is the staff's position that the guarantee is not full and unconditional.

For example, the following savings clauses *would not* defeat the full and unconditional nature of the guarantee:

- The guarantor's obligation under the guarantee is limited to ''the maximum amount that can be guaranteed without constituting a fraudulent conveyance or fraudulent transfer under applicable insolvency laws.''
- The guarantee is enforceable ''to the fullest extent permitted by law.''

The following savings clauses *would* defeat the full and unconditional nature of the guarantee:

- The guarantee is enforceable ''up to $XX.''
- The guarantor guarantees the indebtedness ''up to $XX.''
- The guarantee is ''limited to $XX, in order to prevent the guarantor from violating applicable fraudulent conveyance or transfer laws.''
- The guarantee is enforceable ''up to XX% of the guarantor's current assets.''
- The guarantee is ''limited to XX% of the guarantor's current assets in order to prevent the guarantor from violating applicable fraudulent conveyance or transfer laws.''

[13] Rule 3–10 also prescribes financial statement requirements for affiliates of reporting issuers when the securities of such affiliates are the collateral for any class of the issuer's registered securities. These requirements are outside the scope of today's proposal. See Section VI.G. for a more complete discussion of those requirements.

[14] A subsidiary may have outstanding securities convertible into its voting shares if its parent owns all of the convertible securities. *Citizens Utilities Company* (May 20, 1996).

[15] 17 CFR 210.1–02(aa).

[16] All securities of a subsidiary that confer the right to elect directors or their functional equivalent annually, whether or not those securities are equity or debt, must be held by the parent to satisfy the ''wholly-owned'' test. This test is unaffected by the existence of other securities that grant the right to vote in the event of special circumstances, such as a default. See 17 CFR 210.1–02(z) for the definition of ''voting shares.''

• The guarantee is enforceable ''so long as it would not result in the subsidiary having less than $XX in net assets (or other financial measure).''

(iii) Guarantee Still May Be Full and Unconditional Even if it has Different Subordination Terms Than the Guaranteed Security. A guarantee can be full and unconditional despite different subordination terms between the guaranteed security and the guarantee.[17] Although different subordination terms mean security holders have different rights in the priority of payment, both the issuer and the guarantor remain fully liable to holders for all amounts due under the guaranteed security.

2. Modified Financial Statements Described in SAB 53

As we discussed above, SAB 53 indicated the staff's acceptance of modified financial information for subsidiary issuers when:

• The subsidiary issuer is a wholly-owned subsidiary of the parent guarantor; and

• The guarantee is full and unconditional.

If either of these conditions is not met, full financial statements for subsidiary issuers of guaranteed securities must be included in the registration statement.

If both of these conditions are met, SAB 53 states that the amount of required financial information regarding the subsidiary issuer will depend on whether the subsidiary has independent operations.

a. Subsidiary Issuer ''Essentially has no Independent Operations''In this situation, SAB 53 states that the subsidiary is not required to provide any separate financial statements because ''the investor's investment decision is based on the credit worthiness of the guarantor.'' This category was intended for finance subsidiaries. These typically are subsidiaries that function as special purpose divisions of the parent to raise capital or conduct financing. They typically have no operations or assets other than those associated with their financing activities.[18]

b. Subsidiary Has ''More than Minimal Independent Operations''. SAB 53 requires summarized financial information when the subsidiary issuer has ''more than minimal independent operations.'' This summarized financial information must meet the requirements of Rule 1–02(bb)(1) of Regulation S–X.[19]

C. Evolution of SAB 53 Analysis

As companies have developed new structures for subsidiary issued and guaranteed securities, the staff has expanded the analysis of SAB 53 through its processing of registration statements and exemptive requests.[20]

1. Expansion of SAB 53 to Securities Other Than Debt

a. Preferred Equity Securities. SAB 53 only speaks of guaranteed debt securities. However, the same principles used under SAB 53 apply to preferred equity securities when the preferred securities have payment terms substantially the same as debt—that is, the payment terms mandate redemption and/or dividend payments. Like debt securities, these preferred equity securities usually lack voting rights.[21]

In order for a guarantor of preferred securities to be eligible for SAB 53 relief, it must fully and unconditionally guarantee all of the issuer's payment obligations under the certificate of designations or other instrument that governs the preferred securities. The guarantor must guarantee the payment, when due, of:

• All accumulated and unpaid dividends that have been declared on the preferred stock out of funds legally available for the payment of dividends;

• The redemption price, on redemption of the preferred stock, including all accumulated and unpaid dividends; and

• Upon liquidation of the issuer of the preferred stock, the aggregate stated liquidation preference and all accumulated and unpaid dividends, whether or not declared, without regard to whether the issuer has sufficient assets to make full payment as required on liquidation.

Some preferred stock guarantees limit the guarantor's redemption and liquidation payments to the amount of funds or assets that are legally available to the issuer of the preferred stock. These guarantees *would not be full and unconditional.* For example, guarantees that contain the following provisions would not be full and unconditional:

• The guarantor guarantees, on redemption of the preferred stock, the redemption price, including all accumulated and unpaid dividends, from funds legally available *therefor under the (governing instrument).*

• Upon liquidation of the issuer of the preferred stock, guarantor agrees to pay the lesser of:

• The aggregate stated liquidation preference and all accumulated and unpaid dividends, whether or not declared; and

• The amount of assets of the issuer of the preferred stock *legally available for distribution to holders of the preferred stock in liquidation.*

b. Trust Preferred Securities/Income Preferred Securities. In recent years the markets have developed complex instruments called trust preferred securities.[22] Trust preferred securities generally are issued by a special purpose business trust created by its parent.[23] The trust exists only to issue the preferred securities and hold debt securities issued by its parent. Payment obligations of the trust are ensured not by a single agreement called a guarantee, but through several agreements and the terms of the debt securities it holds. The agreements normally include a guarantee and an expense undertaking from the parent, the trust indenture for the debt securities the trust holds, and the trust declaration of the trust itself.

The staff has agreed with the view that the bundle of rights provided by these several agreements and the debt securities held by the trust, usually called ''back-up undertakings,'' is the equivalent of a full and unconditional guarantee of the trust's payment obligations. Because the ''back-up undertakings'' place the investor in the same position as if the parent company had fully and unconditionally guaranteed the trust's payment obligations on the preferred securities, the staff has agreed that the SAB 53 principles may be applied.

[17] *Williams Scotsman, Inc.* (March 19, 1998).

[18] This definition in consistent with the definition in Rule 3a–5 of the Investment Company Act of 1940, which provides that the primary purpose of a finance subsidiary is to finance the business operations of the parent or a company controlled by the parent.

[19] 17 CFR 210.1–02(bb)(1).

[20] SAB 53 applies to both financial statement requirements in Securities Act registration statements and the Exchange Act reporting obligations of subsidiary guarantors and subsidiary issuers of guaranteed securities. The staff applies the same analysis to each of these situations. With regard to the Exchange Act reporting obligations of these subsidiaries, SAB 53 instructs issuers to file exemptive applications under Section 12(h) of the Exchange Act. Early in the development of SAB 53 issues, the staff began accepting these exemptive requests as ''no-action'' letters instead of exemptive applications. this process continues today. Throughout this release, when we discuss ''exemptive requests'' we refer to both exemptive applications and ''no-action'' requests.

[21] Preferred equity securities normally carry very limited voting rights, such as the right of holders to vote on matters affecting their rights as shareholders or business combinations. The right to elect directors is normally conferred only when the issuer has failed to declare or pay a dividend required by the security.

[22] Other names for these securities include ''monthly income preferred securities'' or ''quarterly income preferred securities.'' These securities generally are sold under proprietary names such as MIPs or TOPRs.

[23] These securities typically are issued by a business trust but also may be issued by a limited partnership or a limited liability corporation.

2. Parent Issuer and Subsidiary Guarantor

Under the reasoning of SAB 53, any subsidiary guarantor would be required to file full financial statements.[24] As parent-issuer/subsidiary-guarantor structures became more widely used, the staff revised this position. The staff's response to a 1987 exemptive request states that the staff would treat subsidiary guarantors the same as it treats subsidiary issuers.[25] Based on this position, a subsidiary guarantor's financial reporting obligations could be modified in the same manner as a subsidiary that issues debt securities that are guaranteed by its parent.

3. Use of Condensed Consolidating Financial Information

As stated above, the SAB 53 analysis does not require separate financial statements if the subsidiary issuer or subsidiary guarantor has no independent operations or assets, but it requires summarized financial information when the subsidiary has more than minimal independent operations or assets.[26] Over time, the usefulness of summarized financial information decreased as the corporate structures used in offerings of guaranteed securities evolved and became more complex.

For example, more complex guarantee structures raised the question of how to deal with multiple guarantors. Some interpretive requests involved more than 100 subsidiary guarantors. Other structures presented to the staff involved a subsidiary issuer, a parent guarantor, multiple subsidiary guarantors, and multiple subsidiaries that were not guarantors.

The limited SAB 53 structure did not adequately accommodate these new complexities. In some cases, strict application of the SAB 53 standard would have required more than 100 different sets of summarized financial statements. Not only would that disclosure have been burdensome on the registrant to provide, but it is unlikely to have been useful to investors.

The summarized financial information requirement in Regulation S-X was originally intended to inform investors about a registrant's equity investments in unconsolidated affiliates. This type of financial information is appropriate when the investment decision is based solely on the financial condition of the parent company. The limited data will show the general, indirect effect of the subsidiaries on that parent company's financial condition. However, in adopting SAB 53, the staff did not contemplate the widespread use of summarized data as the primary financial information for decisions about the credit-worthiness of a subsidiary's guarantee of registered debt. The staff also did not contemplate more complex parent-subsidiary structures where investors must assess the subsidiary's financial condition more completely and independently of its parent company and of that parent's other subsidiaries. For example, we believe investors focus on cash flow information in credit decisions, but summarized financial information includes no cash flow information.

Through interpretive requests and the review and comment process, the staff developed a bifurcated approach to address the presentation of useful financial information for guaranteed securities and the guarantees. The first part of this approach relies on the inclusion of ''condensed consolidating financial information'' in lieu of summarized financial information in situations where the presentation of financial statements of the entities would be useful to an investor.[27] Condensed consolidating financial information provides a more complete, meaningful basis for investors to assess the debt-paying ability of subsidiary issuers and guarantors.

Condensed consolidating financial information requires the columnar presentation of each category of parent and subsidiary as issuer, guarantor, or non-guarantor.[28] These presentations more clearly distinguish the assets, liabilities, revenues, expenses, and cash flows of the entities that are legally obligated under the indenture from those that are not. Summarized financial information may obscure these distinctions, particularly if subsidiary guarantors themselves have consolidated operating subsidiaries that are not guarantors.

Condensed consolidating information provides the same level of detail about the financial position, results of operations, and cash flows of subsidiary issuers and guarantors that investors are accustomed to obtaining in interim financial statements of a registrant. It facilitates analysis of trends affecting subsidiary issuers and guarantors and the understanding of relationships among the various components of a consolidated organization.

However, SAB 53 itself requires summarized financial information, not condensed consolidating information. As we described above, the staff developed the requirement for condensed consolidating financial information through interpretive requests because summarized financial information was not adequate financial disclosure for the new financing structures not contemplated when the SAB was created. The second part of the staff's approach to the presentation of financial statements relies on the use of summarized financial information only in those increasingly less frequent situations in which the SAB specifically contemplated that financing structure.

V. Current Exchange Act Periodic Reporting Requirements

A. Exchange Act Reporting Requirements

The registration of an offering of a guarantee under the Securities Act obligates the guarantor to file periodic reports with the Commission. Exchange Act Section 15(d) requires separate annual and interim reports from both the issuer and the guarantor of securities offered under an effective Securities Act registration statement.

B. Modification of Exchange Act Reporting Requirements for Subsidiary Guarantors and Subsidiary Issuers of Guaranteed Securities

SAB 53 only briefly addresses the Exchange Act reporting obligations of subsidiary issuers of parent-guaranteed securities. In a footnote, SAB 53 states:

> Where the parent guarantor of an issuer subsidiary in either the first [finance subsidiary issuer-no separate financial statements] or second [operating subsidiary issuer-summarized financial statements] category is a reporting company under the Exchange Act, upon application to the Commission such a subsidiary would be conditionally exempted pursuant to Section 12(h) of the Exchange Act from reporting obligations under such Act.

[24] SAB 53 states: In the relatively infrequent situations where a registration statement covers the issuance by a parent of a security that is guaranteed by its subsidiary, the staff has concluded that, as a general rule, financial statements for both issuers would be material to the investment decision.

[25] *Anheuser-Busch Companies, Inc.* (April 2, 1987).

[26] Summarized financial information, generally, consists of summarized information as to the assets, liabilities and results of operations of the entity. See 17 CFR 210.1–02(bb) for the specific requirements of summarized financial information.

[27] The staff has applied this standard to those situations that do not involve a single subsidiary issuer or guarantor or that do not involve a finance subsidiary issuer with the parent as the sole guarantor involving finance subsidiaries. The staff first accepted condensed consolidating financial information in connection with its case-by-case review of registration statements for offerings of securities with this structure. Consistent with the earlier development of SAB 53 interpretation, the staff applied the same analysis to exemptive requests for Exchange Act reporting. *Chicago & North Western Acquisition Corp.* (February 6, 1990); *EPIC Properties, Inc.* (March 13, 1992).

[28] The staff permits subsidiary guarantors to combine financial information in one column if their guarantees are joint and several.

Since the issuance of SAB 53, the staff of the Division of Corporation Finance has responded to an increasing number of requests for exemptions from Exchange Act reporting. The staff's analysis of Exchange Act exemptive requests parallels its analysis under the Securities Act of the financial statement requirements for subsidiary guarantors and subsidiary issuers of guaranteed securities. If a subsidiary issuer or guarantor need not include separate financial statements under the SAB 53 analysis, an exemption from separate reporting under the Exchange Act should also be available. Instead of separate reporting for the subsidiary issuer or guarantor, the parent will present in its annual and quarterly reports the same modified information regarding the subsidiary as it presented in its Securities Act registration statement.

VI. The Rule Proposals

We believe that the requirements for subsidiary issuer and guarantor financial information should be set forth in Regulation S–X. We also believe that the exemption from Exchange Act reporting should be set forth in a rule that parallels the financial statement requirements. We propose to codify, in large part, the staff's current approach in these areas. We believe the proposals will provide investors with meaningful and comparable financial information about subsidiary issuers and guarantors.

We believe our proposals will provide significant benefits to subsidiary issuers and guarantors of securities. First, they would remove uncertainty about financial statement requirements. Second, they should greatly reduce the number of exemptive requests registrants must make to the Division of Corporation Finance. This would lessen the administrative burden to registrants and the Division alike.

A. Application of Proposed Rule 3–10

As we discuss in Section IV.C.1. above, the staff has applied SAB 53 to debt and to preferred securities that have payment terms that are substantially the same as debt. We propose the same scope for Rule 3–10. These preferred securities would include trust preferred securities and income preferred securities, as we describe in Section IV.C.1.b. above.[29]

We request your comment on the scope of the rule. Should it apply to preferred securities with payment terms substantially the same as debt or only to debt securities? Are there any other securities, similar to debt, to which the proposed rule should apply? Are there any categories of debt securities to which the rule should not apply? Should it not apply to trust preferred securities and income preferred securities such as MIPs and TOPRs? If so, is the level of disclosure set forth in Exhibit A appropriate? Should we treat the parent's back-up undertakings as a full and unconditional guarantee? Should the parent's financial statements include any more or less disclosure about the preferred securities?

B. Modified Financial Statement Reporting Requirements

First, we propose to restate the general rule that all issuers or guarantors of registered securities must include full financial statements. We then propose to allow modified financial information in registration statements and periodic reports for five issuer/guarantor situations:

- A finance subsidiary issues securities that its parent guarantees;
- An operating subsidiary issues securities that its parent guarantees;
- A subsidiary issues securities that are guaranteed by its parent and one or more other subsidiaries of its parent;
- A parent issues securities that one of its subsidiaries guarantees; and
- A parent issues securities that are guaranteed by more than one of its subsidiaries.

In these five situations, we propose the following two-part analysis to determine whether modified financial information may be provided for subsidiary issuers and guarantors. If the answer to *both* questions is yes, modified financial information would be allowed:

- Is the subsidiary issuer or guarantor wholly-owned by its reporting parent?
- Are all of the guarantees full and unconditional?

We propose to include in Rule 3–10 the same definitions of ''wholly-owned'' and ''full and unconditional guarantee'' that the staff applies under SAB 53. The interpretations of wholly-owned in Section IV.B.1.a. and Appendix C, and of full and unconditional in Section IV.B.1.b. would be applied to these definitions.

We seek comment on whether the five categories listed above are appropriate. Are there other categories of parent/subsidiary relationships that we should separately address? We also seek comment on the proposed definition of ''wholly-owned.'' Are there circumstances in which the parent does not own 100% of the voting shares of its subsidiary that should qualify for special treatment under proposed Rule 3–10? For example, what if a foreign country requires directors to own a certain percentage of a company's voting shares?[30]

What if a subsidiary has outstanding securities convertible into its voting shares not owned, directly or indirectly, by its parent? What if those securities have been issued but are not yet exercisable? What if a subsidiary has granted options to its employees that are exercisable for its voting shares? What if the options have been granted but are not yet exercisable?

We also request comment on the definition of ''wholly-owned'' as it applies to subsidiaries that are trusts, limited partnerships, or limited liability companies. Is there a more appropriate standard than the direct or indirect ownership of 100% of the voting shares of the subsidiary? ''Voting shares,'' as defined in Rule 1–02(z) of Regulation S–X,[31] include ''the sum of all rights, other than as affected by events of default, to vote for election of directors and/or the sum of all interests in an unincorporated person.'' Is this the proper definition of voting shares and, therefore, ''wholly-owned,'' for these types of subsidiaries?

We also request comment on whether the proposed definition of ''full and unconditional'' is appropriate. Should a guarantee be considered full and unconditional when it contains a general fraudulent conveyance savings clause that is not limited to a specific dollar or percentage amount? Are there some circumstances in which a guarantee should be considered full and unconditional even when it contains a limitation of a specific dollar amount or percentage? Are there other limitations on preferred stock guarantees that we have not mentioned that would cause a guarantee not to be full and unconditional? Should we treat the ''back-up undertakings'' that guarantee trust preferred securities and income preferred securities as a full and unconditional guarantee? Should different subordination terms between a guaranteed security and the guarantee call into question the full and unconditional character of the guarantee?

[29] See Example #23 of Appendix A for the information the proposed rule would require the parent to include in its financial statements with respect to these securities.

[30] *See, e.g.,* Crown Cork & Seal Company, Inc. (March 10, 1997). The staff agreed to a no-action request from a subsidiary organized in the Republic of France even though it had more than one voting shareholder. French law required the subsidiary to have a total of seven shareholders and also required each director to own at least one share. The staff noted that the subsidiary was wholly-owned, except to the minimum extent necessary to satisfy the laws of its home country.

[31] 17 CFR 228.1–02(z).

If *either* the guarantee is not full and unconditional *or* the subsidiary issuer/guarantor is not wholly owned by its reporting parent, then modified financial information would not be allowed. In subsections 1 through 6, below, we assume that each of these conditions has been met.

1. Finance Subsidiary Issuers

We propose to amend Rule 3–10 to codify SAB 53's treatment of finance subsidiary issuers of securities that are guaranteed by the parent company. Specifically, subsidiary issuers would not be required to include any financial statements if:

- The subsidiary has no independent assets or operations other than those associated with the financing activities;
- The parent of the issuer guarantees the securities;
- No other subsidiaries of the parent guarantee the securities;
- The parent company's financial statements are filed for the periods specified by Rules 3–01 and 3–02 of Regulation S–X; and
- The parent company's financial statements include a footnote stating that the issuer is a wholly-owned finance subsidiary of the parent with no independent assets or operations and the parent has fully and unconditionally guaranteed the securities.

2. Operating Subsidiary Issuers

We propose to amend Rule 3–10 to address specifically the structure where the parent of a subsidiary with independent assets or operations guarantees the securities issued by that subsidiary. Under SAB 53 and current staff interpretations, this issuer may disclose only summarized financial information instead of a full financial presentation. Consistent with our view that condensed financial information is more informative, we propose that these issuers need not include separate financial statements if:

- No subsidiaries of the parent guarantee the securities;
- The parent company's financial statements are filed for the periods specified by Rules 3–01 and 3–02 of Regulation S–X; and
- The parent company's financial statement footnotes include condensed consolidating financial information with a separate column for:
- The parent company,
- The subsidiary issuer,
- Any other subsidiaries of the parent on a combined basis,
- Consolidating adjustments, and
- The total consolidated amounts.

3. Subsidiary Issuer of Securities Guaranteed by Its Parent and One or More Other Subsidiaries of That Parent

We propose to codify current staff interpretations for the structure where a subsidiary issues securities and both its parent and one or more other subsidiaries of the parent are guarantors. We propose that these subsidiary issuers and guarantors need not include separate financial statements if:

- The guarantees are joint and several;
- The parent company's financial statements are filed for the periods specified by Rules 3–01 and 3–02 of Regulation S–X; and
- The parent company's financial statement footnotes include condensed consolidating financial information with a separate column for:
- The parent company,
- The subsidiary issuer,
- The guarantor subsidiaries on a combined basis,
- The non-guarantor subsidiaries on a combined basis,
- Consolidating adjustments, and
- The total consolidated amounts.

This proposal would apply the same requirement for condensed consolidating financial information to finance subsidiary issuers and operating subsidiary issuers that are part of this structure.

4. Subsidiary Guarantor of Securities Issued by Its Parent

We propose to codify the current staff interpretation for the structure where a parent company issues securities and one of its subsidiaries guarantees those securities. We propose that the subsidiary guarantor need not include separate financial statements if:

- No other subsidiaries of that parent guarantee the securities;
- The parent company's financial statements are filed for the periods specified by Rules 3–01 and 3–02 of Regulation S–X; and
- The parent company's financial statement footnotes include condensed consolidating financial information with a separate column for:
- The parent company,
- The subsidiary guarantor,
- Other subsidiaries of the parent on a combined basis,
- Consolidating adjustments, and
- The total consolidated amounts.

This proposal would apply the same requirement for condensed consolidating financial information to finance subsidiary guarantors and operating subsidiary guarantors that are part of this structure.

5. Multiple Subsidiary Guarantors of Securities Issued by Their Parent

We propose to codify the staff's position that when a parent company issues securities and more than one of its subsidiaries guarantees the securities, the subsidiary guarantors need not include separate financial statements if:

- The guarantees are joint and several;
- The parent company's financial statements are filed for the periods specified by Rules 3–01 and 3–02 of Regulation S–X; and
- The parent company's financial statement footnotes include condensed consolidating financial information with a separate column for:
- The parent company,
- The subsidiary guarantors on a combined basis,
- The non–guarantor subsidiaries on a combined basis,
- Consolidating adjustments, and
- The total consolidated amounts.

C. Recently Acquired Subsidiary Issuers or Guarantors

A special issue in the financial statement disclosure for issuers and guarantors is the treatment of recently acquired subsidiaries. Because these subsidiaries generally are not included in the consolidated results of the parent company for all periods, condensed consolidating financial information does not effectively present all material information about these subsidiaries to investors.[32]

We propose to require pre-acquisition financial statements for significant, recently acquired subsidiary issuers and guarantors until the condensed consolidating financial information would adequately reflect their cash flows and results of operations. Specifically, we propose to require separate audited financial statements for significant, recently acquired subsidiary issuers and guarantors for the subsidiary's most recent fiscal year. Unaudited financial statements also must be filed for any interim period specified by Rules 3–01 and 3–02 of Regulation S–X.[33]

We propose to require pre-acquisition financial statements in registration

[32] Currently, Rule 3–10 and SAB 53 provide no relief for a subsidiary issuer or guarantor for periods prior to its acquisition. Literal application of Rule 3–10 would require three years of audited financial statements, regardless of the significance of the acquired subsidiary. The staff has administratively permitted registrants to apply the significance tests in Rule 3–10(b) by analogy, but that practice has provided limited relief and created a number of implementation issues.

[33] 17 CFR 210.3–01 and 17 CFR 210.3–02.

statements only. We would not require them in Exchange Act periodic reports.

This proposed treatment for recently acquired subsidiaries would apply to any subsidiary issuer or guarantor:

- That has not been included in the audited consolidated results of the parent company for at least a nine-month period; and
- Whose net book value or purchase price, whichever is greater, equals 20% or more of the shareholders' equity of the parent company on a consolidated basis.[34]

We propose to measure the significance of recently acquired issuers and guarantors by comparison to shareholders' equity of the parent company rather than to the amount of the debt being registered. The proposed measure is more consistent with the staff's overall approach to analyzing issuer/guarantor structures, which focuses on the relationship of subsidiary financial information to the parent company's consolidated financial statements. The proposed measure should be a more relevant indicator of the recently acquired subsidiary's relative importance to the parent company. The proposed measure should not cause financial statements to be filed for small guarantors acquired by well-capitalized companies that issue relatively small amounts of debt. Conversely, the proposed measure should result in greater financial disclosure where the parent company is thinly capitalized.

Is 20% of consolidated shareholders' equity the correct measure for requiring the financial statements of a recently acquired subsidiary that issues guaranteed securities or guarantees securities? Would a larger percentage, such as 30%, 40%, 50%, be more appropriate? Would a smaller percentage, such as 15%, 10%, or 5%, be more appropriate? Is shareholders' equity the correct test for applying the requirement? Should other factors be considered instead of, or in addition to, shareholders' equity? If so, what other factors should be considered? Is nine months the proper length of time for this analysis? Should it be shorter, such as three or six months? Should it be longer, such as a full fiscal year or two fiscal years?

D. Instructions for Condensed Consolidating Financial Information Under Proposed Rule 3–10

To help ensure meaningful, consistent presentation of the condensed consolidating financial information, we propose thirteen instructions on how to prepare them. We propose to include these instructions in new paragraph (i) of Rule 3–10. The proposed instructions are:

1. Present the financial information in sufficient detail to allow investors to determine the assets, results of operations, and cash flows of each of the consolidating groups.
2. Follow the general guidance in Rule 10–01 of Regulation S–X for the form and content for condensed financial statements.
3. The financial information should be audited for the same periods that the parent company financial statements are audited.
4. The parent company column should present investments in all subsidiaries under the equity method.
5. All subsidiary issuer or guarantor columns should present investments in non-guarantor subsidiaries under the equity method.
6. Provide separate columns for each guarantor by legal jurisdiction if differences in domestic or foreign laws affect the enforceability of the guarantees.
7. Include the following disclosures:
   - Each subsidiary issuer and/or guarantor is wholly owned by the parent company;
   - All guarantees are full and unconditional; and
   - Where there is more than one guarantor, all guarantees are joint and several.
8. Disclose any significant restrictions on the ability of the parent company or any guarantor to obtain funds from its subsidiaries by dividend or loan.
9. Provide the disclosures prescribed by Rule 4–08(e)(3) with respect to the guarantors.
10. Disclose additional financial and narrative information about each guarantor if the information would be material for investors to evaluate the sufficiency of the guarantee.
11. The financial information shall include sufficient disclosures to make the information presented not misleading.
12. Disclosure that would substantially duplicate disclosure elsewhere in the parent's financial statements is not required.
13. Where the parent company's consolidated financial statements are prepared on a comprehensive basis other than U.S. Generally Accepted Accounting Principles, reconcile the information in each column to U.S. Generally Accepted Accounting Principles to the same extent specified by Item 17 of Form 20–F.

We request comment as to whether these instructions provide sufficient guidance to prepare the financial statements. For example, are the instructions too general or specific? Would further guidance be helpful? Also, do the instructions elicit the appropriate level of disclosure?

E. Condensed Consolidating Financial Information

Our proposals today adopt the first part of the staff's current approach to the presentation of useful financial information: condensed consolidating financial information. We propose to require condensed consolidating financial information in all situations not involving a finance subsidiary, as described above. We request comment on this proposal. Is condensed consolidating financial information adequate for current financing structures of guaranteed securities and guarantees? Will condensed consolidating financial information adapt to the developing financing structures? Are there situations in which summarized financial information is adequate? Is there another type of financial presentation that would be better suited for guaranteed securities and guarantees than either condensed consolidating or summarized financial information?

We propose to amend Item 310 of Regulation S–B to require small business issuers to include the same financial information requirements as in proposed Rule 3–10. We request comment on this proposal. Is it appropriate to propose the same requirements, regardless of the size of the issuer? Should there be different standards for small business issuers? Is the corporate structure of small business issuers less complex and, if so, do investors not need condensed consolidating information?

F. Exchange Act Reporting

Currently, subsidiary issuers or guarantors that are not required to include separate financial statements may seek an exemption from the Exchange Act reporting requirements. As noted above, the volume of these exemptive requests is significant. The staff's consideration of these exemptive requests requires the same analysis we use in determining the level of financial information required.

We propose new Rule 12h–5 to eliminate the need for these exemptive requests and to remove uncertainty regarding the availability of an exemption from Exchange Act reporting. As proposed, Rule 12h–5 would exempt from Exchange Act reporting:

[34] This significance test would be computed by using amounts for the subsidiary and parent as of the most recent fiscal year end before the acquisition.

• Any subsidiary issuer or subsidiary guarantor permitted to omit financial statements by Rule 3–10; and

• Any recently acquired subsidiary issuer or subsidiary guarantor that would be permitted to omit financial statements by Rule 3–10, but for the requirement to provide pre-acquisition financial statements under paragraph (g) of that rule.

As required by Rule 3–10, the parent company periodic reports would include condensed consolidating financial information about the subsidiary issuers and/or guarantors.[35] The parent company periodic reports must contain this information:

• For as long as the issuer and any guarantors would be subject to reporting under Section 15(d) as a result of the securities offering; and

• If the guaranteed securities are registered under Section 12, for as long as the issuer and any guarantors would be subject to reporting obligations under Section 13(a) as a result of the registration of the guaranteed securities under Section 12.

These exemptions are the same as the staff currently provides in its responses to exemptive requests. The staff grants these exemptions because investors should be provided one source for all of the necessary information regarding investment in those securities—the parent company's periodic reports—and condensed information regarding the subsidiaries within those reports is sufficient for a complete understanding of the investment.

Under proposed Rule 12h–5, these subsidiary issuers and subsidiary guarantors would be exempted automatically from Exchange Act reporting requirements. As a result, there would be no need for them to request exemptive relief from the Commission's staff.

We request comment on proposed Rule 12h–5. Should there be additional requirements for the exemption from Exchange Act reporting? For example, would it be appropriate to require the subsidiary to file a Form 15 to inform us that it is not required to file Exchange Act reports due to the Rule 12h–5 exemption? Would it be appropriate for the subsidiary to file a Form 15 filing as a condition to the exemption's availability? Would such a filing be useful information for the public? Would such a filing be an undue burden on the subsidiary? What should be required of subsidiaries that no longer qualify for the exemption from Exchange Act reporting under proposed Rule 12h–5 because they no longer satisfy the requirements of Rule 3–10 (for example, if the guarantee is no longer full and unconditional or the subsidiary is no longer wholly-owned)? For example, should they be required to file a report on Form 8–K to notify investors that they will resume their reports under the Exchange Act? Should some other form of notification be required?

G. Financial Statements of Affiliates Whose Securities Collateralize Registered Securities—Proposed Rule 3–16 of Regulation S–X

The financial statement requirements for affiliates whose securities collateralize registered securities currently are combined with the requirements for guarantors in Rule 3–10 of Regulation S–X. We do not propose to amend the financial statement requirements for these affiliates. Because our proposed amendments to Rule 3–10 would change significantly the structure of that rule, we propose to move the requirements for these affiliates into a rule that applies only to them. This will avoid confusion and make the requirements easier to understand. This proposed rule would be new Rule 3–16 of Regulation S–X.[36]

VII. Request for Comment

A. Request Regarding Specific Proposals

The Commission requests comments on all aspects of the proposed amendments.

In addition, we request comment on the following questions:

• If we adopt today's proposals, should there be a phase-in period for parent companies that currently include only summarized financial information? If so, why would such a phase-in be needed? How long should that phase-in period be? Should it begin with the beginning of the first fiscal year after adoption of the proposals?

• A significant benefit that we seek in today's proposals is the certainty issuers receive by having the disclosure and reporting standards in Commission rules. Is there any additional means by which we could provide this certainty? Are there any means by which subsidiaries could be certain that they have met the standards in proposed Rule 3–10 and, therefore, may rely upon the exemption in proposed Rule 12h–5?

• Today's proposals do not address the situation where a parent company and one of its wholly-owned subsidiaries are co-obligors on a debt or preferred security. In responses to the infrequent exemptive requests on this issue, the staff has treated this as if it were a subsidiary issuer/parent guarantor situation. Because this situation may present unique issues, we would continue to have these issuers contact the staff and request exemptive relief. Should we include the co-obligor situation in Rule 3–10? Is the information required by proposed Rule 3–10 sufficient in a co-obligor situation?

• Should reporting relief be available when a guaranteed security is in default? Should additional disclosures be required in these circumstances?

• Should there be an exception from condensed consolidating information for subsidiary guarantors where:

(1) The parent company issuer has no independent assets or operations,

(2) Substantially all assets and operations are in guarantor subsidiaries, and

(3) The non-guarantor subsidiaries are inconsequential?

Should parent company only financial statements be permitted in these circumstances instead of condensed consolidating information? Should the parent company be the only Exchange Act reporting company in these circumstances?

• We request comment as to how the proposed rule should apply to Foreign Private Issuers. For example, in reports on Form 6–K that include interim period financial statements about the parent company, should we require Foreign Private Issuers to include condensed consolidating information about subsidiaries of the type that we would require the parent to include in its annual report on Form 20–F? What if the parent were required to file a Form 6–K due to financial reporting requirements in its home country but the subsidiary did not have a corresponding reporting obligation? Should the parent's reports on Form 6–K still include condensed consolidating financial information about the subsidiary in that event?

• If we adopt today's proposals, will there be a need for SAB 53? If so, for what purpose would SAB 53 be used? If not, should SAB 53 be rescinded?

[35] In the case of finance subsidiaries, the parent company financial statements would include the narrative information required by proposed Rule 3–10(b)(4).

[36] Under current Rule 3–10, the staff frequently is presented with registration statements in which the registrants did not recognize that the financial statement requirements for guarantors may differ from the requirements for affiliates whose securities collateralize the registered securities. This misunderstanding causes significant issues in structuring securities and considering on-going disclosure responsibilities.

B. General Request Regarding Debt Offerings

Current rules and staff practices related to debt offerings focus on the existence of registered guarantees. An issuer of debt securities that are guaranteed by subsidiaries generally must provide additional financial information about those subsidiaries. However, an issuer of unguaranteed debt is generally not required to provide separate financial information about its subsidiaries, even where substantially all of the assets and operations of the consolidated group are held by the subsidiaries. Current rules require narrative disclosure of the nature and extent of material restrictions on the ability of the subsidiaries to distribute funds to the parent company, but do not require separate financial information about the subsidiaries or the parent on an unconsolidated basis unless restricted net assets of the subsidiaries exceed a specified level.[37]

Some believe that the current rules and practices place a disproportionate burden on issuers that attempt to provide additional protection to debt holders through guarantees, in comparison to issuers of unguaranteed debt. Others believe that narrative disclosures regarding subsidiaries' ability to distribute funds to the issuer are not sufficient to allow investors to interpret the issuer's consolidated financial statements. Additional financial disclosure such as condensed consolidating information or parent-only financial statements would, they argue, enhance investors' ability to evaluate the issuer's debt-paying capacity.

We are requesting comment on whether additional financial disclosures should be required for offerings of debt that are not guaranteed. Are the current requirements adequate? Should condensed consolidating information, or parent-only information as contemplated by Rule 12–04 of Regulation S–X, be required for all debt issuers that have subsidiaries with assets and operations, even if there are no subsidiary guarantors? Should other types of disclosure be required in these circumstances?

We invite any interested persons to submit comments. Please submit comment letters in triplicate to Jonathan G. Katz, Secretary, U.S. Securities and Exchange Commission, Mail Stop 6–9, 450 Fifth Street, N.W., Washington, D.C. 20549. You also may submit comment letters electronically to the following e-mail address: rule-comments@sec.gov. All comment letters should refer to File No. S7–XX–99. If e-mail is used, include this file number on the subject line. The Commission will consider these comments in complying with its responsibilities under Sections 2(b) and 19(a) of the Securities Act and Sections 3(f) and 12(h) of the Exchange Act.

VIII. Costs and Benefits of the Proposed Rule Changes and Their Effects on Efficiency, Competition, and Capital Formation

We are proposing financial reporting rules for issuers and guarantors of guaranteed securities. We are also proposing an exemption from periodic reporting for subsidiary issuers and guarantors of these securities. Our rule proposals would, for the most part, codify the positions the staff has developed through Staff Accounting Bulletin No. 53, later interpretations, and the registration statement review process. The rule proposals deviate from current practice only in the following two situations:

- A subsidiary with more than minimal operations issues securities, its parent guarantees the securities, and no subsidiary guarantees the securities; and
- A parent issues securities, a subsidiary with more than minimal operations guarantees the securities, and no other subsidiary guarantees the securities.

Those registrants currently are permitted to provide summarized financial information instead of full financial statements. Under our proposals, those registrants would be required to provide condensed consolidating financial information instead of summarized financial information.

Because the proposed rules are essentially codifying staff position, we do not believe the proposed rules would impose substantial regulatory costs on registrants. To illustrate this point, we note the additional burdens these proposals would have on registrants who were granted no-action relief in calendar year 1997. The Division provided 641 written responses to requests for no-action letters in 1997. Shareholder proposal requests pursuant to Exchange Act Rule 14a–8 accounted for 343 of these responses. Of the 298 non-shareholder proposal no-action responses, 140 were requests concerning SAB 53. Of the 140 SAB 53 no-action responses the Division issued, 29 were permitted to provide summarized financial statements. Under our proposals, those 29 registrants would be required to provide condensed consolidating financial information. We have estimated the average cost of providing condensed consolidating information instead of summarized financial information for each of those registrants to be approximately $1000.[38] Therefore, we estimate that the aggregate additional annual cost to all registrants will be approximately $29,000 (29 registrants × $1000 per registrant). We request your comments on the reasonableness of our estimates.

The costs of the proposed rules are counter-balanced by the benefits to registrants and investors. First, we intend for these rules to eliminate uncertainty about which financial statements and periodic reports subsidiary issuers and guarantors must file. Second, the proposed rules require financial information that is more helpful to an investor in the two areas where summarized financial statements are permitted today.[39] Finally, because registrants would be required to provide condensed consolidating financial information in all situations in which they must provide separate financial information, the investors will be able to compare the financial information among all offerings.

The proposed codification of current staff positions would also benefit companies by eliminating the need to create, submit, and obtain a no-action letter response from the Division. As stated above, in 1997, the Division issued responses to 140 requests for SAB 53 no-action positions. Based on discussions with external legal counsel who prepare no-action requests, we estimate that, on average, it takes 35 hours to prepare a request for a no-action letter. Assuming that the external professional help costs $175 per hour,

[37] See Rule 4–08 of Regulation S–X (17 CFR 210.4–08) and Rule 12–04 of Regulation S–X [17 CFR 210.12–04].

[38] Depending on the number of subsidiaries, the complexity of the financing structure, and other factors, the time required to provide condensed consolidating financial information instead of summarized financial information could vary significantly. Based on consultation with an outside consultant, we estimate that, on average, it would take an additional 16 hours to provide condensed consolidating financial information in lieu of summarized financial information. Assuming that the corporate staff preparing this information are compensated at the rate of $63 per hour, we estimate the cost of providing condensed consolidating information to be approximately $1008 per registrant ($63 per hour × 16 hours).

[39] Condensed consolidating financial information requires the columnar presentation of each category of parent and subsidiary as issuer, guarantor, or non-guarantor. This more clearly distinguishes the assets, liabilities, revenues, expenses, and cash flows of the entities that are legally obligated under the indenture from those that are not, particularly if subsidiary guarantors themselves have consolidated operating subsidiaries that are not guarantors. Another important element of credit decisions is cash flow information. Condensed consolidating financial information requires this information while summarized financial information does not.

the total cost for preparing a request for a no-action position is approximately $6100 per request. Applying these figures to the number of no-action letter requests to which we respond annually, we estimate the number of attorney hours spent annually on creating a request for a SAB 53 no-action position to be 4900 hours and the annual savings to registrants to be approximately $850,000. We request your comment on the reasonableness of our estimates.

Section 23(a) of the Exchange Act [40] requires us to consider the impact any new Exchange Act rule would have on competition. We do not believe that the proposed rules would have any anti-competitive effects since the proposed rules, to a large extent, simply codify the reporting requirements to which registrants are already subject. In the two situations in which the proposed rules require more than the current staff positions, we do not believe the proposed requirement to provide condensed consolidating financial information instead of summarized financial information would cause any anti-competitive effect. We request comment on whether the proposals, if adopted, would have an adverse effect on competition or would impose a burden on competition that is neither necessary nor appropriate in furthering the purposes of the Exchange Act. In addition, Section 3(f) of the Exchange Act requires us to consider adopting rules that require a public interest finding to consider whether the proposed rule will promote efficiency, competition and capital formation. We believe that the proposed rule amendments will have a positive, but unquantifiable, effect on efficiency, competition, and capital formation. We seek comment on the intended benefits and how these changes would affect competition, capital formation and market efficiency.

For purposes of the Small Business Regulatory Enforcement Fairness Act of 1996, we also request information regarding the potential impact of the proposals on the economy on an annual basis. Would the amendments, if adopted, result or be likely to result in:

- An annual effect on the economy of $100 million or more;
- A major increase in costs or prices for consumers or individual industries; or
- Significant adverse effects on competition, investment, or innovation?

Commentators should provide empirical data to support their views.

Commenters are encouraged to provide views and data relating to any costs or benefits associated with the rule proposal. In particular, please identify any costs or benefits associated with the rule proposal relating to the preparation of condensed consolidating financial information instead of summarized financial information. Will the proposal have no substantial effect as anticipated, or will the proposal result in additional costs and benefits? Please describe and, if possible, quantify any foreseeable significant effects.

[40] 15 U.S.C. 78w(a)(2).

IX. Regulatory Flexibility Act Certification

Pursuant to section 605(b) of the Regulatory Flexibility Act, 5 U.S.C. 605(b), the Chairman of the Commission has certified that the proposal would not, if adopted, have a significant economic impact on a substantial number of small entities. The proposed rules largely codify the positions the staff has developed through Staff Accounting Bulletin No. 53, later interpretations and the registration statement review process. The rule proposals deviate from current practice only in the following two situations:

- A subsidiary with more than minimal operations issues securities, its parent guarantees the securities, and no subsidiary guarantees the securities; and
- A parent issues securities, a subsidiary with more than minimal operations guarantees the securities, and no other subsidiary guarantees the securities.

Today, those registrants currently are permitted to provide summarized financial information instead of full financial statements. Under our proposals, those registrants would be required to provide condensed consolidating financial information instead of summarized financial information. As we discussed in our analysis of the costs and benefits of the proposed rule changes above, the burden to provide condensed consolidating information instead of summarized financial information would not have a substantial effect on any registrant.

More specifically, we do not believe that our proposed rules would have a substantial impact on small entities. In the last ten years, the Division has responded to only one SAB 53 request in which the related offering was registered on a small business issuer form, and that company would not meet the definition of small business entity for Regulatory Flexibility Act purposes.[41] We include the certification in this release as Attachment D and encourage written comments relating to it. Commenters should describe the nature of any impact on small entities and provide empirical data to support the extent of the impact.

[41] In order to qualify to use small business issuer forms to register an offering, the issuer must, among other things, have less than $25 million in assets and no more than $25 million in public float. Small business issuers who qualify to use small business issuer registration forms may also elect to use standard registration forms.

X. Paperwork Reduction Act

We have submitted the proposals to the Office of Management and Budget for review in accordance with the Paperwork Reduction Act of 1995, 44 U.S.C. 3501 *et seq.* Current Rule 3–10 requires full financial statements for all guarantors or securities and for all affiliates of those guarantors whose securities constitute a substantial portion of the collateral. For those registrants who qualify, we anticipate that proposed Rule 3–10 of Regulation S–X would reduce or eliminate the existing information collection requirements that are associated with current Rule 3–10. This information would potentially be required to be presented in several Securities Act registration statements and Exchange Act reports to assist investors in the determination of the credit worthiness of a security.

The proposed rules will affect the inclusion of information in Securities Act registration Forms S–1, F–1, S–4 and F–4 (OMB control numbers 3235–0065, 3235–0258, 3235–0324, and 3235–0325, respectively). We estimate that the proposed rules will increase the average burden per form by approximately five minutes.[42] The proposed rules also will affect the inclusion of information in Exchange Act Forms 10–K and 10–Q (OMB control numbers 3235–0063 and 3235–0070). We estimate the proposed rules will increase the average burden per form by approximately three minutes and one minute, respectively.[43]

[42] To arrive at this number, we divided the estimated number of companies that will have to provide condensed consolidating financial information in lieu of summarized financial information per year (29) by the estimated number of filings on these forms per year (5653) and multipled that quotient (.00513) by the estimated number of hours to convert financials (16).

[43] To arrive at this number for Form 10–K, we divided the estimated number of companies that will have to provide condensed consolidating financial information in lieu of summarized financial information per year (29) by the estimated number of filings on these forms per year (10,329) and multipled that quotient (.00279) by the estimated number of hours to convert financials (16). To arrive at this number for Form 10–Q, we divided the estimated number of companies that will have to provide condensed consolidating financial information in lieu of summarized financial information per year (29) by the estimated number of filings on these forms per year (29,551)

Continued

We estimated the increased burden hours for each form by dividing the estimated aggregate increased burden for all forms, whether or not the filers would be required to report under Rule 3–10, by the estimated total number of filers. The burden for Regulation S–X (OMB control number 3235–0009) will remain unchanged.

The proposed changes would not affect the retention period. The filing of financial statements, as described in this release, is mandatory. They are not kept confidential. An agency may not conduct or sponsor, and a person is not required to respond to, a collection of information unless it displays a correctly valid control number.

In accordance with 44 U.S.C. 3506(c)(2)(B), the Commission solicits comments to:

- Evaluate whether the proposed collection of information is necessary for the proper performance of the functions of the agency, including whether the information shall have practical utility;
- Evaluate the accuracy of the Commission's estimate of the burden of the proposed collection of information;
- Enhance the quality, utility, and clarity of the information to be collected; and
- Minimize the burden of collection of information on those who are to respond, including through the use of automated collection techniques or other forms for information technology.

Persons desiring to submit comments on the collection of information requirements should direct them to the following persons: Desk Officer for the Securities and Exchange Commission, Office of Information and Regulatory Affairs, Office of Management and Budget, Room 3208, New Executive Office Building, Washington, D.C. 20503; and Jonathan G. Katz, Secretary, Securities and Exchange Commission, 450 Fifth Street, N.W., Washington, D.C. 20549, and refer to File No. S7–7–99. The Office of Management and Budget is required to make a decision concerning the collection of information between 30 and 60 days after publication of this release in the **Federal Register**, so a comment to OMB is best assured of having its full effect if OMB receives it within 30 days of this publication.

XI. Statutory Bases

We propose the rule changes explained in this release pursuant to sections 7,[44] 10,[45] and 19(a)[46] of the Securities Act and sections 12,[47] 13,[48] and 15(d)[49] of the Exchange Act.

List of Subjects in 17 CFR Parts 210, 228 and 240

Reporting and recordkeeping requirements, Securities.

Text of the Proposed Rules

For the reasons set out in the preamble, the Securities and Exchange Commission proposals to amend title 17, chapter II of the Code of Federal Regulations as follows:

PART 210—FORM AND CONTENT OF AND REQUIREMENTS FOR FINANCIAL STATEMENTS, SECURITIES ACT OF 1933, SECURITIES EXCHANGE ACT OF 1934, PUBLIC UTILITY HOLDING COMPANY ACT OF 1935, INVESTMENT COMPANY ACT OF 1940, AND ENERGY POLICY AND CONSERVATION ACT OF 1975

1. The authority citation for Part 210 continues to read as follows:

Authority: 15 U.S.C. 77f, 77g, 77h, 77j, 77s, 77z–2, 77aa(25), 77aa(26), 78j–i, 78*l*, 78m, 78n, 78o(d), 78u–5, 78w(a), 78*ll*(d), 79e(b), 79j(a), 79n, 79t(a), 80a–8, 80a–20, 80a–29, 80a–30, 80a–37(a), unless otherwise noted.

2. Section 210.3–10 is revised to read as follows:

§ 210.3–10 Financial statements of guarantors, certain issuers of guaranteed securities registered or being registered.

(a)(1) General rule. As a general rule, every issuer of a registered security that is guaranteed and every guarantor of a registered security must file the financial statements required for a registrant by Regulation S–X.

(2) Operation of this rule. Paragraphs (b), (c), (d), (e), and (f) of this section are exceptions to the general rule of paragraph (a)(1) of this section. Paragraph (g) of this section is a special rule for recently acquired issuers or guarantors that overrides each of these exceptions. Only one paragraph can apply to a single issuer or guarantor. Paragraph (h) of this section defines some of the terms used in this section. Paragraph (i) of this section states the requirements for preparing the condensed consolidating financial information required by paragraphs (c), (d), (e), and (f) of this section.

(b) *Finance subsidiary issuer of securities guaranteed by its parent.* When a company with no independent assets or operations issues securities and its parent guarantees those securities, the registration statement, annual report, or quarterly report need not include financial statements of the issuer if:

(1) The issuer is wholly-owned by the parent guarantor;

(2) The guarantee is full and unconditional;

(3) No other subsidiaries of the parent guarantee the securities; and

(4) The parent company's financial statements are filed for the periods specified by § § 210.3–01 and 210.3–02 and include a footnote stating that the issuer is a wholly-owned finance subsidiary of the parent with no independent assets or operations and the parent has fully and unconditionally guaranteed the securities.

(c) *Operating subsidiary issuer of securities guaranteed by its parent.* When a company with independent assets or operations issues securities and its parent guarantees those securities, the registration statement, annual report, or quarterly report need not include financial statements of the issuer if:

(1) The issuer is wholly-owned by the parent guarantor;

(2) The guarantee is full and unconditional;

(3) There are no subsidiaries of the parent that guarantee those securities; and

(4) The parent company's financial statements are filed for the periods specified by §§ 210.3–01 and 210.3–02 and include, in a footnote, condensed consolidating information for the same periods with a separate column for the parent company, the subsidiary issuer, any other subsidiaries of the parent on a combined basis, consolidating adjustments, and the total consolidated amounts.

(d) *Subsidiary issuer of securities guaranteed by its parent and one or more other subsidiaries of that parent.* When a company issues securities and both its parent and one or more other subsidiaries of that parent guarantee those securities, the registration statement need not include financial statements of the issuer or the subsidiary guarantor(s) if:

(1) The issuer and each of the subsidiary guarantors are wholly-owned by the parent guarantor;

(2) The guarantees are full and unconditional;

(3) The guarantees are joint and several; and

(4) The parent company's financial statements are filed for the periods specified by §§ 210.3–01 and 210.3–02

and multipled that quotient (.0009814) by the estimated number of hours to convert financials (16).

[44] 15 U.S.C. 77g.

[45] 15 U.S.C. 77j.

[46] 15 U.S.C. 77t.

[47] 15 U.S.C. 78l.

[48] 15 U.S.C. 78m.

[49] 15 U.S.C. 78o(d).

and include, in a footnote, condensed consolidating financial information for the same periods with a separate column for the parent company, the subsidiary issuer, the guarantor subsidiaries on a combined basis, the non-guarantor subsidiaries on a combined basis, consolidating adjustments, and the total consolidated amounts.

(e) *Subsidiary guarantor of securities issued by the parent of that subsidiary.* When a parent company issues securities and one subsidiary of that issuer guarantees those securities, the registration statement need not include financial statements of the subsidiary guarantor if:

(1) The subsidiary guarantor is wholly-owned by the parent issuer;

(2) The guarantee is full and unconditional;

(3) There are no other subsidiaries of that parent that guarantee the securities; and

(4) The parent company's financial statements are filed for the periods specified by §§ 210.3–01 and 210.3–02 and include, in a footnote, condensed consolidating financial information for the same periods with a separate column for the parent company, the subsidiary guarantor, any other subsidiaries of the parent on a combined basis, consolidating adjustments, and the total consolidated amounts.

(f) *Subsidiary guarantors of securities issued by the parent of those subsidiaries.* When a parent company issues securities and more than one subsidiary of that issuer guarantees those securities, the registration statement need not include financial statements of the subsidiary guarantors if:

(1) Each of the subsidiary guarantors is wholly-owned by the parent issuer;

(2) The guarantees are full and unconditional;

(3) The guarantees are joint and several; and

(4) The parent company's financial statements are filed for the periods specified by §§ 210.3–01 and 210.3–02 and include, in a footnote, condensed consolidating financial information for the same periods with a separate column for the parent company, the subsidiary guarantors on a combined basis, the non-guarantor subsidiaries on a combined basis, consolidating adjustments, and the total consolidated amounts.

(g) *Recently acquired issuers or guarantors.* (1) The registration statement of the parent company must include the financial statements specified in paragraph (g)(2) of this section for any subsidiary that otherwise would meet the conditions in paragraph (c), (d), (e), or (f) of this section for omission of separate financial statements if:

(i) The subsidiary has not been included in the audited consolidated results of the parent company for at least a nine month period; and

(ii) The net book value or purchase price, whichever is greater, of the subsidiary exceeds 20% of the shareholders' equity of the parent company on a consolidated basis.

Instruction to paragraph (g)(1): The significance test of paragraph (g)(1)(ii) of this section should be computed using amounts for the subsidiary and parent as of the most recent fiscal year end preceding the acquisition.

(2) Financial statements required—

(i) Audited financial statements for a subsidiary described in paragraph (g)(1) of this section must be filed for at least the subsidiary's most recent fiscal year. In addition, unaudited financial statements must be filed for any interim periods specified in §§ 210.3–01 and 210.3–02.

(ii) The financial statements should conform to the requirements of Regulation S–X, except that supporting schedules need not be filed.

(3) Acquisitions of a group of subsidiary issuers or guarantors that are related prior to their acquisition shall be aggregated for purposes of applying the 20% test in paragraph (g)(1)(ii) of this section. Subsidiaries shall be deemed to be related prior to their acquisition if:

(i) They are under common control or management;

(ii) The acquisition of one subsidiary is conditioned on the acquisition of each subsidiary; or

(iii) The acquisition of each subsidiary is conditioned on a single common event.

(4) Information required by this paragraph (g) of this section is not required to be included in an annual report or quarterly report.

(h) *Definitions.* For the purposes of this section—

(1) A subsidiary is *wholly-owned* if all of its outstanding voting shares are owned, either directly or indirectly, by the parent company. If the subsidiary is not in corporate form, it is ''wholly-owned'' if all of its outstanding ownership interests are owned, either directly or indirectly, by the parent company.

(2) A guarantee is *full and unconditional,* if, when an issuer of a guaranteed security has failed to make a scheduled payment, any holder of the guaranteed security may immediately bring suit directly against the guarantor for payment of all amounts due and payable.

(3) *Annual report* refers to annual reports on Form 10–K, Form 10–KSB, or Form 20–F (§ § 249.310, 249.310b, or 249.220f of this chapter).

(4) *Quarterly report* refers to quarterly reports on Form 10–Q or Form 10–QSB (§ § 249.308a or 249.308b of this chapter).

(i) *Instructions for preparation of the condensed consolidating financial information required by paragraphs (c), (d), (e), and (f) of this section.*

(1) Present the financial information in sufficient detail to allow investors to determine the assets, results of operations, and cash flows of each of the consolidating groups;

(2) Follow the general guidance in § 210.10–01 for the form and content for condensed financial statements;

(3) The financial information should be audited for the same periods that the parent company financial statements are audited;

(4) The parent company column should present investments in all subsidiaries under the equity method;

(5) All subsidiary issuer or guarantor columns should present investments in non-guarantor subsidiaries under the equity method;

(6) Provide separate columns for each guarantor by legal jurisdiction if differences in domestic or foreign laws affect the enforceability of the guarantees;

(7) Include the following disclosures:

(i) Each subsidiary issuer and/or guarantor is wholly owned by the parent company;

(ii) All guarantees are full and unconditional; and

(iii) Where there is more than one guarantor, all guarantees are joint and several;

(8) Disclose any significant restrictions on the ability of the parent company or any guarantor to obtain funds from its subsidiaries by dividend or loan;

(9) Provide the disclosures prescribed by § 210.4–08(e)(3) with respect to the guarantors;

(10) Disclose additional financial and narrative information about each guarantor if the information would be material for investors to evaluate the sufficiency of the guarantee;

(11) The financial information shall include disclosures sufficient so as to make the information presented not misleading;

(12) Disclosure that would substantially duplicate disclosure elsewhere in the parent's financial statements is not required; and

(13) Where the parent company's consolidated financial statements are

prepared on a comprehensive basis other than U.S. Generally Accepted Accounting Principles, reconcile the information in each column to U.S. Generally Accepted Accounting Principles to the same extent specified by Item 17 of Form 20–F (§ 249.220f of this chapter).

3. Section 210.3–16 is added to read as follows:

§ 210.3–16 Financial statements of affiliates whose securities collateralize an issue registered or being registered.

(a) For each of the registrant's affiliates whose securities constitute a substantial portion of the collateral for any class of securities registered or being registered, there shall be filed the financial statements that would be required if the affiliate were a registrant and required to file financial statements. However, financial statements need not be filed pursuant to this section for any person whose statements are otherwise separately included in the filing on an individual basis or on a basis consolidated with its subsidiaries.

(b) For the purposes of this section, securities of a person shall be deemed to constitute a substantial portion of collateral if the aggregate principal amount, par value, or book value of the securities as carried by the registrant, or the market value of such securities, whichever is the greatest, equals 20 percent or more of the principal amount of the secured class of securities.

PART 228—INTEGRATED DISCLOSURE SYSTEM FOR SMALL BUSINESS ISSUERS

4. The authority citation for part 228 continues to read as follows:

Authority: 15 U.S.C. 77e, 77f, 77g, 77h, 77j, 77k, 77s, 77z–2, 77aa(25), 77aa(26), 77ddd, 77eee, 77ggg, 77hhh, 77jjj, 77nnn, 77sss, 78*l*, 78m, 78n, 78*o*, 78u–5, 78w, 78*ll*, 80a–8, 80a–29, 80a–30, 80a–37, and 80b–11, unless otherwise noted.

5. Section 228.310 is amended by redesignating Note 3 as Note 4 and adding new Note 3 to read as follows:

§ 228.310. (Item 310) Financial Statements.

Notes:

* * * * *

3. Financial statements for a subsidiary of a small business issuer that issues securities guaranteed by the small business issuer or guarantees securities issued by the small business issuer should be presented as required by Rule 3–10 of Regulation S–X (17 CFR 210.3–10), except that the periods presented are those required by paragraph (a) of this item.

* * * * *

PART 240—GENERAL RULES AND REGULATIONS, SECURITIES EXCHANGE ACT OF 1934

6. The authority citation for part 240 continues to read, in part, as follows:

Authority: 15 U.S.C. 77c, 77d, 77g, 77j, 77s, 77z–2, 77eee, 77ggg, 77nnn, 77sss, 77ttt, 78c, 78d, 78f, 78i, 78j, 78j–1, 78k, 78k–1, 78l, 78m, 78n, 78*o*, 78p, 78q, 78s, 78u–5, 78w, 78x, 78*ll*(d), 78mm, 79q, 79t, 80a–20, 80a–23, 80a–29, 80a–37, 80b–3, 80b–4, and 80b–11, unless otherwise noted.

* * * * *

7. Section 240.12h–5 is added to read as follows:

§ 240.12h–5 Exemption for subsidiary guarantors and subsidiary issuers of guaranteed securities.

(a) Any issuer of a guaranteed security or guarantor of a security that is permitted to omit financial statements by § 210.3–10 of Regulation S–X of this Chapter is exempt from the requirements of Section 13(a) or 15(d) of the Act (15 U.S.C. 78m(a) or 78o(d)).

(b) Any issuer of a guaranteed security or guarantor of a security that would be permitted to omit financial statements by § 210.3–10 of Regulation S–X of this Chapter, except for the operation of paragraph (g) of that section, is exempt from the requirements of Section 13(a) or 15(d) of the Act (15 U.S.C. 78m(a) or 78o(d)).

Dated: February 26, 1999.

By the Commission.

Margaret H. McFarland,

Deputy Secretary.

Note: Appendices A, B, C, and D to the preamble will not appear in the Code of Federal Regulations.

Appendix A—Applying the Proposed Rule to Specific Fact Patterns

In each of the following examples, assume that:

- All guarantees are full and unconditional;
- All guarantees are joint and several; and
- All subsidiaries are wholly-owned.

Examples 1–3: Parent Issuer With No Operations

Example Number 1: All Subsidiaries Guarantee Securities

Parent company issues securities. The parent company is a holding company with no independent operations. All of the parent company's subsidiaries guarantee the securities.

Required financial information: Condensed consolidating financial information prepared in accordance with proposed Rule 3–10(f). That financial information would include a separate column for: the parent company, the subsidiary guarantors on a combined basis, consolidating adjustments, and the total consolidated amounts.

Example Number 2: More Than One, but not All, of the Subsidiaries Guarantee the Securities

Parent company issues securities. The parent company is a holding company with no independent operations. More than one, but not all, of the parent company's subsidiaries guarantee the securities.

Required financial information: Condensed consolidating financial information prepared in accordance with proposed Rule 3–10(f). That financial information would include a separate column for: the parent company, the subsidiary guarantors on a combined basis, the non-guarantor subsidiaries on a combined basis; consolidating adjustments, and the total consolidated amounts.

Example No. 3: One Subsidiary Guarantees the Securities

Parent company issues securities. The parent company is a holding company with no independent operations. One of the parent company's subsidiaries guarantees the securities.

Required financial information: Condensed consolidating financial information prepared in accordance with proposed Rule 3–10(e). That financial information would include a separate column for: the parent company, the subsidiary guarantor, the non-guarantor subsidiaries on a combined basis, consolidating adjustments, and the total consolidated amounts.

Examples 4–6: Parent Issuer With Operations

Example No. 4: All Subsidiaries Guarantee the Securities

Parent company issues securities. In addition to its subsidiaries, the parent company has independent operations. All of the parent company's subsidiaries guarantee the securities.

Required financial information: Condensed consolidating financial information prepared in accordance with proposed Rule 3–10(f). That financial information would include a separate column for: the parent company, the subsidiary guarantors on a combined basis, consolidating adjustments, and the total consolidated amounts.

Example No. 5: More Than One, but not All, of the Subsidiaries Guarantee the Securities

Parent company issues securities. In addition to its subsidiaries, the parent company has independent operations. More than one, but not all, of the parent company's subsidiaries guarantee the securities.

Required financial information: Condensed consolidating financial information prepared in accordance with proposed Rule 3–10(f). That financial information would include a separate column for: the parent company, the subsidiary guarantors on a combined basis, the non-guarantor subsidiaries on a combined basis, consolidating adjustments, and the total consolidated amounts.

Example No. 6: One Subsidiary Guarantees the Securities

Parent company issues securities. In addition to its subsidiaries, the parent company has independent operations. One of the parent company's subsidiaries guarantees the securities.

Required financial information: Condensed consolidating financial information prepared in accordance with proposed Rule 3–10(f). That financial information would include a separate column for: the parent company, the subsidiary guarantor, the non-guarantor subsidiaries on a combined basis, consolidating adjustments, and the total consolidated amounts.

Examples 7–10: Finance Subsidiary Issuer. Parent Guarantees the Securities and Has No Operations

Example No. 7: No Other Subsidiaries Guarantee the Securities

A finance subsidiary issues securities. The ultimate parent of that finance company guarantees those securities. The parent company has no independent operations. None of the parent company's other subsidiaries guarantee the securities. Required financial information: In accordance with proposed Rule 3–10(b), the only required financial information would be the financial statements of the parent company. Those financial statements would include a footnote stating that the issuer is a wholly-owned finance subsidiary of the parent with no independent assets or operations and the parent has fully and unconditionally guaranteed the securities.

Example No. 8: All Other Subsidiaries Guarantee the Securities

A finance subsidiary issues securities. The ultimate parent of that finance company guarantees those securities. The parent company has no independent operations. All of the parent company's other subsidiaries guarantee the securities. Required financial information: Condensed consolidating financial information prepared in accordance with proposed Rule 3–10(d). That financial information would include a separate column for: the parent company, the subsidiary issuer, the subsidiary guarantors on a combined basis, consolidating adjustments, and the total consolidated amounts.

Example No. 9: More than one, but not all, of the other subsidiaries guarantee the securities

A finance subsidiary issues securities. The ultimate parent of that finance company guarantees those securities. The parent company has no independent operations. More than one, but not all, of the parent company's other subsidiaries guarantee the securities.

Required financial information: Condensed consolidating financial information prepared in accordance with proposed Rule 3–10(d). That financial information would include a separate column for: the parent company, the subsidiary issuer, the subsidiary guarantors on a combined basis, the non-guarantor subsidiaries on a combined basis, consolidating adjustments, and the total consolidated amounts.

Example No. 10: One Other Subsidiary Guarantees the Securities

A finance subsidiary issues securities. The ultimate parent of that finance company guarantees those securities. The parent company has no independent operations. One of the parent company's other subsidiaries guarantees the securities. Required financial information: Condensed consolidating financial information prepared in accordance with proposed Rule 3–10(d). That financial information would include a separate column for: the parent company, the subsidiary issuer, the subsidiary guarantor, the non-guarantor subsidiaries on a combined basis, consolidating adjustments, and the total consolidated amounts.

Examples 11–14: Finance Subsidiary Issuer. Parent Guarantees the Securities and Has Operations

Example No. 11: No Other Subsidiaries Guarantee the Securities

A finance subsidiary issues securities. The ultimate parent of that finance company guarantees those securities. In addition to its subsidiaries, the parent company has independent operations. None of the parent company's other subsidiaries guarantee the securities.

Required financial information: In accordance with proposed Rule 3–10(b), the only required financial information would be the financial statements of the parent company. Those financial statements would include a footnote stating that the issuer is a wholly-owned finance subsidiary of the parent with no independent assets or operations and the parent has fully and unconditionally guaranteed the securities.

Example No. 12: All Other Subsidiaries Guarantee the Securities

A finance subsidiary issues securities. The ultimate parent of that finance company guarantees those securities. In addition to its subsidiaries, the parent company has independent operations. All of the parent company's other subsidiaries guarantee the securities.

Required financial information: Condensed consolidating financial information prepared in accordance with proposed Rule 3–10(d). That financial information would include a separate column for: the parent company, the subsidiary issuer, the subsidiary guarantors on a combined basis, consolidating adjustments, and the total consolidated amounts.

Example No. 13: More Than One, but not All, of the Other Subsidiaries Guarantee the Securities

A finance subsidiary issues securities. The ultimate parent of that finance company guarantees those securities. In addition to its subsidiaries, the parent company has independent operations. More than one, but not all, of the parent company's other subsidiaries guarantee the securities.

Required financial information: Condensed consolidating financial information prepared in accordance with proposed Rule 3–10(d). That financial information would include a separate column for: the parent company, the subsidiary guarantors on a combined basis, the non-guarantor subsidiaries on a combined basis, consolidating adjustments, and the total consolidated amounts.

Example No. 14: One Other Subsidiary Guarantees the Securities

A finance subsidiary issues securities. The ultimate parent of that finance company guarantees those securities. In addition to its subsidiaries, the parent company has independent operations. One of the parent company's other subsidiaries guarantees the securities.

Required financial information: Condensed consolidating financial information prepared in accordance with proposed Rule 3–10(d). That financial information would include a separate column for: the parent company, the subsidiary issuer, the subsidiary guarantor, the non-guarantor subsidiaries on a combined basis, consolidating adjustments, and the total consolidated amounts.

Examples 15–18: Operating Subsidiary Issuer. Parent Guarantees the Securities and Has No Operations

Example No. 15: No Other Subsidiaries Guarantee the Securities

An operating subsidiary issues securities. The ultimate parent of that operating subsidiary guarantees those securities. The parent company has no independent operations. None of the parent company's other subsidiaries guarantee the securities.

Required financial information: Condensed consolidating financial information prepared in accordance with proposed Rule 3–10(c). That financial information would include a separate column for: the parent company, the subsidiary issuer, any other subsidiaries on a combined basis, consolidating adjustments, and the total consolidated amounts.

Example No. 16: All Other Subsidiaries Guarantee the Securities

An operating subsidiary issues securities. The ultimate parent of that operating subsidiary guarantees those securities. The parent company has no independent operations. All of the parent company's other subsidiaries guarantee the securities.

Required financial information: Condensed consolidating financial information prepared in accordance with proposed Rule 3–10(d). That financial information would include a separate column for: the parent company, the subsidiary issuer, the subsidiary guarantors on a combined basis, consolidating adjustments, and the total consolidated amounts.

Example No. 17: More Than One, But Not All, of the Other Subsidiaries Guarantee the Securities

An operating subsidiary issues securities. The ultimate parent of that operating subsidiary guarantees those securities. The parent company has no independent operations. More than one, but not all of the parent company's other subsidiaries guarantee the securities.

Required financial information: Condensed consolidating financial information prepared in accordance with proposed Rule 3–10(d). That financial information would include a separate column for: the parent company, the subsidiary issuer, the subsidiary guarantors on a combined basis, the non-guarantor subsidiaries on a combined basis, consolidating adjustments, and the total consolidated amounts.

Example No. 18: One Other Subsidiary Guarantees the Securities

An operating subsidiary issues securities. The ultimate parent of that operating

subsidiary guarantees those securities. The parent company has no independent operations. One of the parent company's other subsidiaries guarantees the securities.

Required financial information: Condensed consolidating financial information prepared in accordance with proposed Rule 3–10(d). That financial information would include a separate column for: the parent company, the subsidiary issuer, the subsidiary guarantor, the non-guarantor subsidiaries on a combined basis, consolidating adjustments, and the total consolidated amounts.

Examples 19–22: Operating Subsidiary Issuer. Parent Guarantees the Securities and Has Independent Operations

Example No. 19: No Other Subsidiaries Guarantee the Securities

An operating subsidiary issues securities. The ultimate parent of that operating subsidiary guarantees those securities. In addition to its subsidiaries, the parent company has independent operations. None of the parent company's other subsidiaries guarantee the securities.

Required financial information: Condensed consolidating financial information prepared in accordance with Rule 3–10(c). That financial information would include a separate column for: the parent company, the subsidiary issuer, the non-guarantor subsidiaries on a combined basis, consolidating adjustments, and the total consolidated amounts.

Example No. 20: All Other Subsidiaries Guarantee the Securities

An operating subsidiary issues securities. The ultimate parent of that operating subsidiary guarantees those securities. In addition to its subsidiaries, the parent company has independent operations. All of the parent company's other subsidiaries guarantee the securities.

Required financial information: Condensed consolidating financial information prepared in accordance with proposed Rule 3–10(d). That financial information would include a separate column for: the parent company, the subsidiary issuer, the subsidiary guarantors on a combined basis, consolidating adjustments, and the total consolidated amounts.

Example No. 21: More Than One, But Not All, of the Other Subsidiaries Guarantee the Securities

An operating subsidiary issues securities. The ultimate parent of that operating subsidiary guarantees those securities. In addition to its subsidiaries, the parent company has independent operations. More than one, but not all, of the parent company's other subsidiaries guarantee the securities.

Required financial information: Condensed consolidating financial information prepared in accordance with proposed Rule 3–10(d). That financial information would include a separate column for: the parent company, the subsidiary issuer, the subsidiary guarantors on a combined basis, the non-guarantor subsidiaries on a combined basis, consolidating adjustments, and the total consolidated amounts.

Example No. 22: One Other Subsidiary Guarantees the Securities

An operating subsidiary issues securities. The ultimate parent of that operating subsidiary guarantees those securities. In addition to its subsidiaries, the parent company has independent operations. One of the parent company's other subsidiaries guarantees the securities.

Required financial information: Condensed consolidating financial information prepared in accordance with proposed Rule 3–10(d). That financial information would include a separate column for: the parent company, the subsidiary issuer, the subsidiary guarantor, the non-guarantor subsidiaries on a combined basis, consolidating adjustments, and the total consolidated amounts.

Example 23: Trust Preferred Securities

A wholly-owned special purpose business trust with no independent operations issues trust preferred securities. The trust loans the proceeds of the offering of the trust preferred securities to its ultimate parent and the parent issues debentures to the trust. The ultimate parent guarantees the trust preferred securities through a series of ''back-up undertakings.'' In this situation, the trust would be treated as a finance subsidiary under Rule 3–10(b), so the only required financial information would be a narrative discussion of the trust and the securities.

Required financial information: Parent would present the preferred securities as a separate line item on its balance sheet entitled ''Company-Obligated Mandatorily Redeemable Preferred Securities of Subsidiary Trust Holding Solely Debentures of the Company.''

- Parent would include, in a footnote to its financial statements, disclosure that the sole assets of the trust are the parent's debentures.
- Parent would specify in a footnote to its financial statements the principal amount, interest rate and maturity date of the debentures held by the trust.
- Parent would include in an audited footnote to its audited financial statements disclosure:

1. That the trust is wholly-owned;
2. That the sole assets of the trust are the parent's debentures;
3. Of the principal amount, interest rate and maturity date of the parent's debentures held by the trust; and
4. That, considered together, the ''back-up undertakings'' constitute a full and unconditional guarantee by the parent of the trust's obligations under the preferred securities.

Appendix B—Applying the Proposed Rules to Subsidiary Guarantors That Are Added or Deleted in the Future

The analysis regarding the financial information required in a Securities Act registration statement is based solely on the securities that are offered under that registration statement. You should look at the registrants and the securities required to be listed on the cover page of the registration statement when you determine which financials statements you must include. A common question involves how to treat guarantors that you add *after* the registration statement becomes effective. The answer will relate to three areas:

- Securities Act treatment of the ''later-added'' guarantees;
- Financial statement requirements for ''later-added'' guarantors; and
- The separate Exchange Act reporting obligations of those ''later-added'' guarantors.

The following examples involve the application of the proposed rules to these three areas. In each of the following examples, assume that:

- All guarantees are full and unconditional;
- All guarantees are joint and several; and
- All subsidiaries are wholly-owned.

Example No. 1. Parent company registers an offering of its debt securities under the Securities Act. More than one, but not all, of its subsidiaries guarantee the securities. The indenture states that the parent company may, without the approval of the debt holders, add or delete subsidiary guarantors in the future. The securities offering is not a shelf offering.

Financial information required in the Securities Act registration statement: The registration statement would include condensed consolidating financial information prepared in accordance with proposed Rule 3–10(f). That financial information would include a separate column for: the parent company, the subsidiary guarantors as of the date the registration statement became effective on a combined basis, the subsidiaries that were not guarantors as of the date the registration statement became effective on a combined basis, consolidating adjustments, and the total consolidated amounts.

Treatment of future guarantees under the Securities Act: There would be no Securities Act event at the time future guarantors are added or deleted. The decision to add or delete guarantors would not involve an investment decision by the debt holders. Therefore, there would be no need to amend the registration statement after it became effective.

Exchange Act reporting requirements of existing and future guarantors: Proposed Rule 12h–5 would exempt the existing guarantors from separately reporting under the Exchange Act. Because future guarantors would not be registrants on a Securities Act registration statement, they would have no separate reporting obligation under Section 15(d) of the Exchange Act. Therefore, there would be no need to provide an exemption for these future guarantors from the requirements of Section 15(d).

Financial statement requirements in parent company's Exchange Act reports: The financial statements in the parent company's periodic reports would be the same as in the Securities Act registration statement and there would continue to be condensed consolidating financial information with the same columns of information. However, as the companies that comprise each column would change, the parent company would revise the makeup of that column of information. For example, the guarantor subsidiaries column and the non-guarantor subsidiaries column may reflect different subsidiaries, depending on which

subsidiaries were in each category at that time. In each of its Exchange Act reports, the parent company would look to which of its subsidiaries was a guarantor as of the end of the period reflected in that periodic report. A footnote to the condensed consolidating financial information should discuss any changes in the composition of the guarantors that comprise the guarantor column.

Example No. 2. Parent company files a Securities Act registration statement relating to a shelf offering of its debt securities. The registration statement states that more than one, but not all, of its subsidiaries will guarantee the securities. The registration statement includes each of the current subsidiary guarantors as a co-registrant. The indenture states that the parent company may, without the approval of the debt holders, add or delete subsidiary guarantors in the future.

Financial information required in the Securities Act registration statement: The registration statement would include condensed consolidating financial information prepared in accordance with proposed Rule 3–10(f). That financial information would include a separate column for: the parent company, the subsidiary guarantors as of the date the registration statement became effective on a combined basis, the subsidiaries that were not guarantors as of the date the registration statement became effective on a combined basis, consolidating adjustments, and the total consolidated amounts.

Treatment of future guarantees under the Securities Act: You will have different answers depending on whether the guaranteed securities have already been offered or whether they will be offered after guarantors are added or deleted. For purposes of this analysis, assume:

- That the shelf registration statement registered the offer and sale of $500 million in debt securities;
- That the parent company sold $200 million of those securities after the registration statement became effective; and
- After that sale, the parent company elected to add or delete subsidiary guarantors, both with respect to the $200 million of securities it has sold and the $300 million of securities that it may sell in the future.

For the same reasons as we discussed in Example No. 1, there would not be a Securities Act registration event with respect to the $200 million of securities that were already sold. However, the registration statement would have to be updated to properly reflect the subsidiary guarantors with respect to any offers or sales of the remaining $300 million of securities. If new guarantors were added to the registration statement, this update would relate to offers and sales of guarantees that were not registered originally. Therefore, this update could not be done through a post-effective amendment. Instead, a new registration statement would be filed to reflect the new guarantors. The parent company and the continuing guarantors could rely on Rule 429 to combine this registration statement with the original shelf registration statement. There would be no additional fee. This new registration statement would have to be filed before any offers of those guarantees could be made and would have to be effective before any sales. Also, the new registration statement would continue to include condensed consolidating financial information in accordance with proposed Rule 3–10(f). However, because the companies that comprise each column would have changed, the parent company would revise the makeup of that column. For example, the guarantor subsidiaries column and the non-guarantor subsidiaries column would reflect different subsidiaries, depending on which subsidiaries were in each category at that time. A footnote to the condensed consolidating financial information should discuss any changes in the composition of the guarantors that comprise the guarantor column.

Exchange Act reporting requirements of existing and future guarantors: Proposed Rule 12h–5 would exempt the existing guarantors from separately reporting under the Exchange Act. Because future guarantors on the $200 million of securities that were already sold would not be registrants on a Securities Act registration statement, they would have no separate reporting obligation at that time. Therefore, there would be no need to provide an exemption for these future guarantors. However, if future guarantors were added to the registration statement with respect to offers and sales of the $300 million of securities remaining on the registration statement, they would have a separate reporting obligation when the registration statement that included them as registrants became effective. Proposed Rule 12h–5 would exempt these guarantors from the requirements of Section 15(d).

Financial statement requirements in parent company's Exchange Act reports: The financial information in the parent company's periodic reports would be the same as in the Securities Act registration statement and there would continue to be condensed consolidating financial information with the same columns of information. However, as the companies that comprise each column would change, the parent company would revise the makeup of that column of information. In each of its Exchange Act reports, the parent company would look to which of its subsidiaries was a guarantor as of the end of the period reflected in that periodic report. A footnote to the condensed consolidating financial information should discuss any changes in the composition of the guarantors that comprise the guarantor column.

Appendix C—What does "wholly-owned" mean under proposed Rule 3–10?

Example No. 1. Parent company own 100% of the voting shares of SubA. SubA owns 100% of the voting shares of Sub1.

Is SubA a wholly-owned subsidiary of the parent company? Yes.

Is Sub1 a wholly-owned subsidiary of SubA? Yes.

Is Sub1 an indirect, wholly-owned subsidiary of the parent company? Yes.

Example No. 2. Parent company own 100% of the voting shares of SubA. SubA owns 99% of the voting shares of Sub1. The remaining 1% of the voting shares of Sub1 is owned by a party that is not a wholly-owned subsidiary of the parent company.

Is SubA a wholly-owned subsidiary of the parent company? Yes.

Is Sub1 a wholly-owned subsidiary of SubA? No.

Is Sub1 an indirect, wholly-owned subsidiary of the parent company? No.

Example No. 3. Parent company owns 99% of the voting shares of SubA. The remaining 1% of the voting shares of SubA are owned by a party that is not a wholly-owned subsidiary of the parent company. SubA owns 100% of the voting shares of Sub1.

Is SubA a wholly-owned subsidiary of the parent company? No.

Is Sub1 a wholly-owned subsidiary of SubA? Yes.

Is Sub1 an indirect, wholly-owned subsidiary of the parent company? No.

Example No. 4. Parent company owns 100% of the voting shares of SubA and 100% of the voting shares of SubB. SubA owns 60% of the voting shares of Sub1 and SubB owns 40% of the voting shares of Sub1.

Is SubA a wholly-owned subsidiary of the parent company? Yes.

Is SubB a wholly-owned subsidiary of the parent company? Yes.

Is Sub1 a wholly-owned subsidiary of SubA? No.

Is Sub1 a wholly-owned subsidiary of SubB? No.

Is Sub1 an indirect, wholly-owned subsidiary of the parent company? Yes.

Example No. 5. Parent company owns 100% of the voting shares of SubA.

Parent company also owns 60% of the voting shares of Sub1. SubA owns 40% of the voting shares of Sub1.

Is SubA a wholly-owned subsidiary of the parent company? Yes.

Is Sub1 a wholly-owned subsidiary of SubA? No.

Is Sub1 an indirect, wholly-owned subsidiary of the parent company? Yes.

Example No. 6. Parent company owns 99% of the voting shares of SubA. As required by the law in its home country, a director of SubA owns the remaining 1% of the voting shares of SubA. SubA owns 100% of the voting shares of Sub1.

Is SubA a wholly-owned subsidiary of the parent company? No.

Is Sub1 a wholly-owned subsidiary of SubA? No.

Is Sub1 an indirect, wholly-owned subsidiary of the parent company? No.

Note: This position is different than current staff interpretations.

Example No. 7. Parent company owns 100% of the voting shares of SubA. SubA has outstanding securities convertible into its voting shares. These convertible securities are held by a party that is not a wholly-owned subsidiary of the parent.

Is SubA a wholly-owned subsidiary of the parent company? No.

Example No. 8. Parent company owns 100% of the voting shares of SubA. SubA has outstanding securities convertible into the parent company's voting shares. These convertible securities are held by a party that is not a wholly-owned subsidiary of the parent.

Is SubA a wholly-owned subsidiary of the parent company? Yes.

Example No. 9. Parent company owns 100% of the voting shares of SubA. SubA has outstanding options exercisable into its voting shares. These options are held by a party that is not a wholly-owned subsidiary of the parent.

Is SubA a wholly-owned subsidiary of the parent company? No.

Example No. 10. Parent company owns 100% of the voting shares of SubA. SubA has outstanding options exercisable into the parent company's voting shares. These convertible securities are held by a party that is not a wholly-owned subsidiary of the parent.

Is SubA a wholly-owned subsidiary of the parent company? Yes.

Example No. 11. Parent company owns 100% of the common stock of SubA. SubA has a class of preferred stock outstanding. That preferred stock is 100% owned by a party that is not a wholly-owned subsidiary of the parent company. The common equity has full voting rights. The preferred stock is non-voting.

Is SubA a wholly-owned subsidiary of the parent company? Yes.

Appendix D—Regulatory Flexibility Act Certification

I, Arthur Levitt, Chairman of the Securities and Exchange Commission, hereby certify pursuant to 5 U.S.C. 605(b) that proposed amendments to Rule 3–10 of Regulation S–X and Item 310 of Regulation S–B, as well as new Rule 3–16 of Regulation S–X and new Exchange Act Rule 12h–5, if adopted, will not have a significant economic impact on a substantial number of small entities. The amendments and new rules largely codify the positions the staff has developed through Staff Accounting Bulletin No. 53, later interpretations and the registration statement review process. Since the registrants already follow these standards, the proposed amendments would not impose a significant impact. Additionally, a review of Division responses to SAB 53 exemptive requests over the last ten years indicates that only one request related to an offering that was registered on a small business form, and that company would not meet the definition of small business entity for Regulatory Flexibility Act purposes. Accordingly, the proposed amendments and new rules would not have a significant economic impact on a substantial number of small entities.

Dated: February 26, 1999.

Arthur Levitt,

Chairman.

[FR Doc. 99–5444 Filed 3–4–99; 8:45 am]

BILLING CODE 8010–01–U

ENVIRONMENTAL PROTECTION AGENCY

40 CFR Part 94

[FRL–6307–2]

RIN 2060–AI17

Extension of Comment Period for Control of Emissions of Air Pollution From New CI Marine Engines At or Above 37 Kilowatts; Proposed Rule

AGENCY: Environmental Protection Agency (EPA).

ACTION: Proposed rule; notice of extension of comment period.

SUMMARY: EPA is extending the comment period for the proposed rule for the control of emissions of air pollution from new CI marine engines at or above 37 kilowatts. The Notice of Proposed Rulemaking (NPRM) was published in the **Federal Register** on December 11, 1998 (63 FR 68507). The close of the comment period for the proposed rule was originally February 26, 1999. EPA is extending the closure of the comment period to March 15, 1999. This extension is being granted while taking into consideration the court-ordered signature date for the final rule of November 23, 1999.

DATES: Comments regarding all issues related to the proposed rule will be accepted until March 15, 1999.

ADDRESSES: Comments on this proposal should be sent to Public Docket A–97–50 at the U.S. Environmental Protection Agency, 401 M Street, S.W., Room M–1500, Washington, DC 20460. EPA requests that a copy of comments also be sent to Jean Marie Revelt, U.S. EPA, Engine Programs and Compliance Division, 2000 Traverwood Dr., Ann Arbor, MI 48105.

FOR FURTHER INFORMATION CONTACT: Margaret Borushko, U.S. EPA, Engine Programs and Compliance Division, (734) 214–4334; Borushko.Margaret@epa.gov.

SUPPLEMENTARY INFORMATION: On December 11, 1998 EPA published a proposal for an emission control program for new compression-ignition marine engines rated at or above 37 kilowatts (63 FR 68507). The comment period was scheduled to end February 26, 1999.

EPA held a public hearing on January 19, 1999, to provide opportunities for the regulated community and other interested parties to comment on issues pertaining to the proposed rule. At the hearing, several commenters requested a longer comment period. EPA has also received several written requests to extend the comment period by 30 days to give affected parties more time to address the issues raised in the NPRM. While EPA agrees that an extension of the comment period may be beneficial, EPA is concerned with allowing the full 30 days requested, given the court ordered requirement to finalize this rulemaking by November 23, 1999. Therefore, EPA is proposing to extend the comment period to March 15, 1999.

Dated: February 25, 1999.

Robert Perciasepe,

Assistant Administrator for Air and Radiation.

[FR Doc. 99–5488 Filed 3–4–99; 8:45 am]

BILLING CODE 6560–50–P

ENVIRONMENTAL PROTECTION AGENCY

40 CFR Part 136

[FRL–6307–3]

Guidelines Establishing Test Procedures for the Analysis of Pollutants; Measurement of Mercury in Water; Notice of Data Availability and Request for Comment

AGENCY: Environmental Protection Agency (EPA).

ACTION: Notice of data availability and request for comment.

SUMMARY: On May 26, 1998 (63 FR 28867), EPA proposed to amend the Guidelines Establishing Test Procedures for the Analysis of Pollutants under section 304(h) of the Clean Water Act by adding EPA Method 1631: Mercury in Water by Oxidation, Purge and Trap, and Cold Vapor Atomic Fluorescence. EPA Method 1631 measures mercury reliably at the low levels associated with ambient water quality criteria for mercury. The comment period on the proposal closed on July 29, 1998. EPA obtained additional effluent and environmental data after the close of the comment period and intends to consider these data in its final rulemaking concerning the use of EPA Method 1631. Therefore, EPA is making these additional data available for public review and comment.

DATES: Written comments on this notice must be submitted on or before April 5, 1999.

ADDRESSES: Written or electronic comments on this notice may be submitted. Written comments on this notice may be sent to ''EPA Method 1631–Notice of Data Availability,'' Comment Clerk, Water Docket MC–4101, Environmental Protection Agency, 401 M Street, S.W., Washington, D.C.

20460. Commenters are requested to submit any references cited in their comments. Commenters also are requested to submit an original and three copies of their written comments and enclosures. Commenters who want receipt of their comments acknowledged should include a self-addressed, stamped envelope. No facsimiles (faxes) will be accepted.

Electronic comments should be addressed to the E-mail address: ow-docket@epamail.epa.gov. Electronic comments must be submitted as an ASCII file and avoid use of special characters and any form of encryption, or may be submitted in WordPerfect 5.1 or 6.1. Electronic comments must be identified as ''EPA Method 1631-Notice of Data Availability.'' Electronic comments on this notice may be filed online at many Federal Depository Libraries. Electronic comments will be transferred into a paper version for the official record. EPA will attempt to clarify electronic comments if there is an apparent error in transmission.

A copy of the supporting documents and data received by the Agency during and pursuant to the comment period for the proposed rule are available for review at EPA's Water Docket, Room EB57, 401 M Street, S.W., Washington, D.C. 20460. For access to the Docket materials, call (202) 260–3027 between 9:00 a.m. and 3:30 p.m. Eastern Time for an appointment.

The complete text of this **Federal Register** notice and EPA Method 1631 may be viewed or downloaded on the Internet at http://www.epa.gov/ost/rules.

FOR FURTHER INFORMATION CONTACT: Dr. Maria Gomez-Taylor,U.S. Environmental Protection Agency, Office of Science and Technology, Engineering and Analysis Division (4303), 401 M Street, S.W., Washington, D.C., 20460, or call (202) 260-1639.

SUPPLEMENTARY INFORMATION:

On May 26, 1998 (63 FR 28867), EPA proposed to add EPA Method 1631: Mercury in Water by Oxidation, Purge and Trap, and Cold Vapor Atomic Fluorescence to 40 CFR Part 136 for National Pollutant Discharge Elimination System (NPDES) data gathering and compliance monitoring under the Clean Water Act (CWA). Mercury is a toxic pollutant as defined in Section 307(a)(1) of the CWA and at 40 CFR 401.16 and is a priority pollutant as listed in 40 CFR Part 423, Appendix A. EPA Method 1631 was proposed under the authority of Sections 301, 304(h), and 501(a) of the CWA. The Agency developed EPA Method 1631 in order to measure mercury reliably at the low levels associated with ambient water quality criteria (WQC) for mercury included in the National Toxics Rule (40 CFR 131.36) and Water Quality Guidance for the Great Lakes System (60 FR 15366). A further description of the development and validation of EPA Method 1631 is provided in the proposed rule.

Following the close of the comment period, the Agency obtained additional analytical data pertinent to EPA Method 1631. The additional data consist of results from laboratory studies and municipal and industrial effluent analyses conducted using EPA Method 1631. This notice makes available for public review and comment these analytical data. Generally, the data supplements existing data by demonstrating the applicability of EPA Method 1631 to a variety of municipal and industrial effluents. The Agency intends to consider these additional data in formulating the final rule for the use of EPA Method 1631.

Today's notice solicits comments only on the new data which confirm or refute the Agency's findings about the acceptability of EPA Method 1631 for the determination of mercury at the low levels associated with Water Quality Criteria. Specifically, the Agency seeks comment on the use of EPA Method 1631 to accurately measure mercury at low levels in a variety of water matrices based on the new data. The Agency does not intend to reopen the comment period on the entire proposed rule. Therefore, there is no need to submit comments on other aspects of the proposal.

The Agency does not interpret the new data as warranting any modification of the proposed rule nor do they indicate a reason to change the Agency's rationale for proposing EPA Method 1631. The Agency believes that these data support the Agency's conclusion that EPA Method 1631 is applicable to a variety of water effluents including municipal and industrial effluents.

Dated: March 1, 1999.

J. Charles Fox,

Assistant Administrator for Water.

[FR Doc. 99–5493 Filed 3–4–99; 8:45 am]

BILLING CODE 6560–50–P

ENVIRONMENTAL PROTECTION AGENCY

40 CFR Part 372

[OPPTS–400137; FRL–6054–2]

RIN 2070–AC00

Acetonitrile; Community Right-to-Know Toxic Chemical Release Reporting

AGENCY: Environmental Protection Agency (EPA).

ACTION: Denial of petition.

SUMMARY: EPA is denying a petition to remove acetonitrile from the list of chemicals subject to the reporting requirements under section 313 of the Emergency Planning and Community Right-to-Know Act of 1986 (EPCRA) and section 6607 of the Pollution Prevention Act of 1990 (PPA). EPA has reviewed the available data on this chemical and has determined that acetonitrile does not meet the deletion criterion of EPCRA section 313(d)(3). Specifically, EPA is denying this petition because EPA's review of the petition and available information resulted in the conclusion that acetonitrile meets the listing criteria of EPCRA section 313(d)(2)(B) and (d)(2)(C) due to its potential to cause neurotoxicity and death in humans and its contribution to the formation of ozone in the environment, which causes adverse human health and environmental effects.

FOR FURTHER INFORMATION CONTACT: Daniel R. Bushman, Petitions Coordinator, 202–260–3882 or e-mail: bushman.daniel@epa.gov, for specific information regarding this document or for further information on EPCRA section 313, contact the Emergency Planning and Community Right-to-Know Information Hotline, Environmental Protection Agency, Mail Code 5101, 401 M St., SW., Washington, DC 20460, Toll free: 1–800–535–0202, in Virginia and Alaska: 703–412–9877, or Toll free TDD: 1–800–553–7672.

SUPPLEMENTARY INFORMATION:

I. General Information

A. Does This Document Apply To Me?

This document does not make any changes to existing regulations. However, you may be interested in this document if you manufacture, process, or otherwise use acetonitrile. Potentially interested categories and entities may include, but are not limited to the following:

Category	Examples of Potentially Interested Entities
Chemical manufacturers	Chemical manufacturers that manufacture acetonitrile, use acetonitrile as a chemical intermediate, or use acetonitrile in the manufacturing or processing of pharmaceuticals, agriculture chemicals, butadiene, isoprene and specialty chemicals and products (e.g., new high density batteries)
Chemical processors and users	Facilities that use acetonitrile as a process or reaction solvent

This table is not intended to be exhaustive, but rather provides a guide for readers regarding entities likely to be interested in this document. Other types of entities not listed in this table may also be interested in this document. Additional businesses that may be interested in this document are those covered under 40 CFR part 372, subpart B. If you have any questions regarding whether a particular entity is covered by this section of the CFR, consult the technical person listed in the ''FOR FURTHER INFORMATION CONTACT'' section.

B. How Can I Get Additional Information or Copies of This Document or Other Support Documents?

1. *Electronically*. You may obtain electronic copies of this document from the EPA Home Page at http://www.epa.gov/. On the Home Page select ''Laws and Regulations'' and then look up the entry for this document under the ''**Federal Register** – Environmental Documents.'' You can also go directly to the ''**Federal Register**'' listings at http://www.epa.gov/fedrgstr/.

2. *In person or by phone*. If you have any questions or need additional information about this action, please contact the technical person identified in the ''FOR FURTHER INFORMATION CONTACT'' section. In addition, the official record for this document, including the public version, has been established under docket control number OPPTS–400137. This record includes not only the documents physically contained in the docket, but all of the documents included as references in those documents (including the references cited in Unit VII. of this preamble). A public version of this record, which does not include any information claimed as Confidential Business Information (CBI), is available for inspection from 12 noon to 4:00 p.m., Monday through Friday, excluding legal holidays. The official record is located in the TSCA Nonconfidential Information Center, Rm. NE–B607, 401 M St., SW., Washington, DC. The TSCA Nonconfidential Information Center telephone number is 202–260–7099.

II. Introduction

A. Statutory Authority

This action is taken under sections 313(d) and (e)(1) of EPCRA, 42 U.S.C. 11023. EPCRA is also referred to as Title III of the Superfund Amendments and Reauthorization Act of 1986 (SARA) (Pub. L. 99–499).

B. Background

Section 313 of EPCRA requires certain facilities manufacturing, processing, or otherwise using listed toxic chemicals in amounts above reporting threshold levels, to report their environmental releases of such chemicals annually. These facilities must also report pollution prevention and recycling data for such chemicals, pursuant to section 6607 of the PPA, 42 U.S.C. 13106. EPCRA section 313 established an initial list of toxic chemicals that comprised more than 300 chemicals and 20 chemical categories. Acetonitrile was included on the initial list. Section 313(d) authorizes EPA to add or delete chemicals from the list and sets forth criteria for these actions. EPA has added and deleted chemicals from the original statutory list. Under section 313(e)(1), any person may petition EPA to add chemicals to or delete chemicals from the list. Pursuant to EPCRA section 313(e)(1), EPA must respond to petitions within 180 days, either by initiating a rulemaking or by publishing an explanation of why the petition is denied.

EPCRA section 313(d)(2) states that a chemical may be listed if any of the listing criteria are met. Therefore, in order to add a chemical, EPA must demonstrate that at least one criterion is met, but does not need to examine whether all other criteria are also met. Conversely, in order to remove a chemical from the list, EPA must demonstrate that none of the criteria are met.

EPA issued a statement of petition policy and guidance in the **Federal Register** of February 4, 1987 (52 FR 3479) to provide guidance regarding the recommended content and format for submitting petitions. On May 23, 1991 (56 FR 23703), EPA issued guidance regarding the recommended content of petitions to delete individual members of the section 313 metal compounds categories. EPA has also published in the **Federal Register** of November 30, 1994 (59 FR 61432) (FRL–4922–2) a statement clarifying its interpretation of the section 313(d)(2) and (d)(3) criteria for modifying the section 313 list of toxic chemicals.

III. Description of Petition and Regulatory Status of Acetonitrile

Acetonitrile is on the list of toxic chemicals subject to the annual release reporting requirements of EPCRA section 313 and PPA section 6607. Acetonitrile was among the list of chemicals placed on the EPCRA section 313 list by Congress. Acetonitrile is listed under the Clean Air Act (CAA) as a volatile organic compound (VOC) and a hazardous air pollutant. Acetonitrile is also on the Hazardous Waste Constituents List under the Resource Conservation and Recovery Act (RCRA).

On February 4, 1998, EPA received a petition from BP Chemicals Inc. (BP) and GNI Chemicals Corporation (GNICC) to delete acetonitrile from the list of chemicals reportable under EPCRA section 313 and PPA section 6607. Specifically, BP and GNICC believe that acetonitrile meets all of the criteria for delisting under EPCRA section 313(d)(3) because: (1) ''acetonitrile is not known to cause and cannot be reasonably anticipated to cause significant adverse human health effects at concentrations that are reasonably likely to exist beyond facility boundaries as a result of continuous or frequently recurring releases''; (2) ''at exposures likely to be found at facility fence lines, acetonitrile is not known to cause and cannot be reasonably anticipated to cause cancer or teratogenic effects of serious irreversible reproductive dysfunction, neurological disorders, heritable genetic mutations, or other chronic health effects''; and (3) ''acetonitrile is not known to cause or reasonably likely to cause significant adverse effects to the environment because it is not toxic or persistent and does not readily bioaccumulate.'' In addition, the petitioners believe that EPA's policy requiring that a chemical not be a VOC ''. . . is irrelevant and should not be considered for this delisting petition.'' The petitioners argue for a revised interpretation of the EPCRA section 313 VOC policy, contending that EPA does not have the statutory authority to list chemicals based upon their status as a VOC. EPA has stated in past **Federal Register** documents (54 FR 4072, January 27, 1989; 54 FR 10668, March 15, 1989; 59 FR 49888, September 30, 1994; 60 FR 31643, FRL–4952–7, June 16, 1995; and 63 FR 15195, FRL–5752–6, March 30, 1998) that VOCs meet the criteria for

listing under EPCRA section 313 due to the fact that VOCs contribute to tropospheric ozone. Notwithstanding the petitioners' belief that a chemical's VOC status is irrelevant to EPCRA section 313 listing, the petitioners have submitted a petition to EPA's Office of Air and Radiation (OAR) to add acetonitrile to the list of ''negligibly photoreactive chemicals'' under 40 CFR 51.100(s)(1).

IV. EPA's Technical Review of Acetonitrile

The technical review of the petition to delete acetonitrile from TRI reporting requirements (Ref. 1) included an analysis of the chemistry (Ref. 2), toxicology (including metabolism and absorption, health effects, and ecological effects) (Ref. 3), environmental fate, and exposure (Ref. 4) data known for acetonitrile. A more detailed discussion for each related topic can be found in EPA's technical reports (Refs. 2, 3, 4, 5, and 6) and the studies contained and referenced in the docket.

A. Chemistry and Use

Acetonitrile, also known as cyanomethane and methyl cyanide, is a colorless, volatile, flammable liquid (boiling point = 81.6 °C; flash point = 12.8 °C) with an ether-like odor. It is completely miscible with water and many organic solvents. Its high dielectric constant and dipole moment make it an excellent solvent for both inorganic and organic compounds, including polymers. Acetonitrile forms a low boiling azeotrope with other organic solvents. The impurities present in commercial grade acetonitrile are water, unsaturated nitriles, toluene, aldehydes, and amines. Acetonitrile is a relatively inert material but produces hydrogen cyanide when heated to decomposition or reacted with acids or oxidizing agents.

Acetonitrile is produced commercially as a by-product during the manufacture of acrylonitrile by high temperature catalytic oxidation of propylene in the presence of ammonia (the Sohio process of propylene ammoxidation). Acetonitrile and hydrogen cyanide are principal by-products of the process. The ratio of acetonitrile to acrylonitrile produced is typically 1:35 (Refs. 2, 6, and 7). Reported production of acetonitrile in the United States (US) in 1993 was 17,859,000 kilograms (kg) (Ref. 6).

Acetonitrile is primarily used as: a reaction solvent in the production of pharmaceuticals; an analytical instrumentation/extraction solvent; an extraction solvent in extracting butadiene and isoprene from reaction steams; and a solvent for the manufacture and formulation of agricultural chemicals. Acetonitrile is also used for extracting fatty acids (e.g., from fish liver oils and other animal and vegetable oils) and in refining copper, dyeing textiles, recrystallizing steroids, and other extraction applications. Acetonitrile is also used as a chemical intermediate for many types of organic compounds (Refs. 2, 6, and 7).

B. Metabolism and Absorption

Absorption of acetonitrile occurs after oral, dermal, or inhalation exposure. Although no quantitative absorption data were found for oral exposure, signs of acute toxicity, observed after oral exposure, indicate that absorption occurs. In humans, 74 percent of acetonitrile was absorbed orally from cigarette smoke held in the mouth for 2 seconds; when inhaled into the lungs, absorption increased to 91 percent. Dogs exposed by inhalation to 16,000 parts per million (ppm) of acetonitrile for 4 hours appeared to reach steady-state blood concentrations within 3 to 4 hours (Ref. 3).

Acetonitrile and its metabolites are transported throughout the body in the blood. After oral or inhalation exposures in experimental animals, acetonitrile or its metabolites were found in the brain, heart, liver, kidney, spleen, blood, stomach, and muscle. After a fatal human inhalation exposure, metabolites were found in the brain, heart, liver, kidney, spleen, blood, stomach, and muscle, as well as skin, lungs, intestine, testes, and urine (Ref. 3).

Acetonitrile is metabolized to hydrogen cyanide and thiocyanate, which are responsible for the toxic effects of the chemical. Metabolism is mediated by the cytochrome P-450 system (Refs. 3 and 8).

Acetonitrile is excreted as acetonitrile in expired air and as acetonitrile or its metabolite in urine. Urinary excretion of the thiocyanate metabolite following oral exposure in rats ranged from 11.8 percent to 37 percent of the administered dose. Acetonitrile concentrations of 2.2 to 20 micrograms/100 milliliters (ml) of urine have been found in heavy smokers (Ref. 3).

C. Toxicity Evaluation

1. *Acute effects*. The only available data regarding acute effects of acetonitrile in humans are from reports of accidental poisonings resulting from acute exposures. It is likely that these acute exposures were at concentrations in excess of 500 ppm (Refs. 3 and 8). At these concentrations, acetonitrile affects the central nervous system producing excess salivation, nausea, vomiting, anxiety, confusion, hyperpnea, dyspnea, rapid pulse, unconsciousness, and convulsions, followed by death from respiratory failure. These effects are consistent with those following inorganic cyanide exposure and with effects seen with other aliphatic nitriles, suggesting that the toxic effects of acetonitrile may be correlated with the metabolic release of cyanide. Acute effects of acetonitrile in humans at concentrations less than 500 ppm consist of irritation of the mucous membranes. No other human data were available that allow characterization of acute toxicity at lower concentrations (Ref. 3).

In animal studies, acetonitrile induced acute toxicity at relatively high inhalation exposures. In acute exposure inhalation toxicity studies, the LC_{50} (i.e., the concentration of a chemical that is lethal to 50 percent of the test organisms) ranges from 2,300 to 5,700 ppm in mice and from 7,500 to 16,000 ppm in rats (Refs. 3 and 8). Mice and guinea pigs appear to be more sensitive than rats for acute toxicity by the oral route. The lowest LD_{50} (i.e., the dose of a chemical that is lethal to 50 percent of the test organisms) values in older rats ranged from 1,300 to 6,700 milligrams per kilogram (mg/kg); young rats appeared to be more sensitive with a LD_{50} value of 157 mg/kg (Refs. 3 and 8). A LD_{50} range of 390 to 3,900 mg/kg was reported by the dermal route in rabbits (Ref. 3). Non-lethal effects at 500 ppm in mice include respiratory effects, convulsions, and eye and lung irritation (Refs. 3 and 8).

2. *Chronic effects*—i. *Carcinogenicity*. EPA has identified no human data in the literature on the cancer effects of acetonitrile. The carcinogenicity of acetonitrile has been studied in experimental animals by the National Toxicological Program (NTP) in F344/N rats and B6C3F1 mice in 2-year inhalation studies (Ref. 9). Under the conditions of the 2-year inhalation studies, there was equivocal evidence of carcinogenic activity of acetonitrile in male F344/N rats based on marginally increased incidences of hepatocellular adenoma and carcinoma in the high-dose (400 ppm) group. There was no evidence of carcinogenic activity of acetonitrile in female F344/N rats, or male and female B6C3F1 mice exposed to any concentration of acetonitrile (Refs. 3 and 9).

No evidence of carcinogenicity of structurally related chemicals has been identified. Acrylonitrile is carcinogenic but it is not a good analogue for acetonitrile because acrylonitrile contains a double bond and is

genotoxic. Acetonitrile is biotransformed via a cytochrome P450 monoxygenated system to cyanohydrin, which then decomposes slowly to hydrogen cyanide and formaldehyde and subsequently is detoxified. Based on the results of the NTP studies, there is insufficient evidence to conclude that acetonitrile may or has the potential to cause cancer in humans (Refs. 3 and 9).

ii. *Mutagenicity*. Positive results were obtained in some *in vitro* studies that would present a concern, albeit weak, for mutagenicity. However, due to the lack of evidence for effects in the mammalian gonad *in vivo*, either in mutagenicity studies or in reproductive/teratology studies, there is no basis for concern for potential heritable gene or chromosomal mutagenicity of acetonitrile (Ref. 3).

iii. *Developmental toxicity*. Information in humans reviewed by the Agency regarding the developmental toxicity of acetonitrile is limited to a study of laboratory workers and pregnancy outcomes, in which a slightly elevated, although non-significant, odds ratio was reported for congenital malformations for women exposed to acetonitrile. Seven cases of spontaneous abortion were noted for women exposed to acetonitrile out of a total of 206 cases reported (535 women were involved in the study). This study was confounded by worker exposure to other chemicals (Refs. 3, 10, and 11).

The developmental toxicity of acetonitrile has been evaluated in rats, rabbits, and hamsters. Overall, evidence for developmental toxicity is weak. Oral and inhalation studies in rats and rabbits have shown no signs of developmental toxicity at doses that did not produce excessive maternal mortality. The only data available on hamsters utilized short durations (60 minutes on day 8 of gestation) to high concentrations of acetonitrile vapor or by gavage on day 8 of gestation. There were some signs of developmental toxicity in hamsters by both routes at dose levels that did not produce overt maternal mortality; however, these studies are difficult to interpret for human risk assessment because: (1) Very high doses were used, and (2) no developmental effects have been observed in other species at doses below those which produced extreme maternal toxicity (10 percent mortality or greater).

iv. *Reproductive toxicity*. Since no definitive two-generation reproductive toxicity or fertility studies with acetonitrile have been identified, information in animals is limited to developmental toxicity studies in which only some reproductive parameters were assessed. Moreover, the data appear to be equivocal. For example, there were no changes in pregnancy rates or resorptions in rats exposed to doses as high as 500 milligram/kilogram/day (mg/kg/day) (Ref. 14). However, in another study, significant increases in post-implantation losses and early resorptions in rats exposed to 275 mg/kg/day acetonitrile were observed (Ref. 15). In other studies, acetonitrile was not shown to produce any effects on: The testis, epididymis, and cauda epididymis weights; sperm motility, number, or morphology; or the average estrous cycle length, frequency of estrous stages, or terminal female body weight (Ref. 16). In conclusion, available animal studies do not fully characterize the reproductive toxicity of acetonitrile. Although some reproductive parameters appeared to be unaffected in some studies, none of the studies evaluated the reproductive performance or reproductive system effect of offspring exposed *in utero*. Therefore, there is not sufficient information to fully characterize the potential for reproductive toxicity of acetonitrile (Ref. 3).

v. *Neurotoxicity*. In humans, the nervous system is a major target for acetonitrile toxicity. In reports of accidental poisonings in humans exposed to presumed high concentrations of acetonitrile, signs of salivation, nausea, vomiting, anxiety, confusion, hyperpnea, dyspnea, rapid pulse, unconsciousness, and convulsions followed by death from respiratory failure were observed (Refs. 3 and 8). No information was found on the adverse neurotoxic effects of long-term human exposure to acetonitrile. Brief references appear in the Hazardous Substances Data Bank (HSDB) (Ref. 17) suggesting that chronic exposure to acetonitrile may cause headache, anorexia, dizziness, and weakness, but no additional information on neurotoxicity was provided in support of these statements (Ref. 3).

Neurotoxicity studies indicate that subchronic exposures (subchronic is defined by EPA's Integrated Risk Information System (IRIS) as multiple or continual exposures occurring usually over three months (Ref. 18)) to acetonitrile can cause serious and irreversible health effects in animals. Monkeys appeared to be more sensitive than rats to the neurotoxic effects of acetonitrile with signs of neurotoxicity, such as brain hemorrhages, hyper-excitability, and over-extension reflexes, observed at or near 350 ppm. Subchronic inhalation studies have been conducted on rats, monkeys, and dogs (Ref. 19). Wistar rats (15 per sex per exposure level) were exposed to 0, 166, 330, and 655 ppm of acetonitrile for 7 hours a day for 5 days a week for 90 days. One out of five rat brains examined in the 655 ppm exposure group had focal cerebral hemorrhage. This effect was similar to that reported in Rhesus monkeys that were exposed to acetonitrile at 330, 660, and 2,510 ppm (approximately 28, 55, and 210 mg/kg/day) for 7 hours a day for up to 99 days. The monkey exposed to 2,510 ppm died with severe pulmonary effects after the second day of exposure, and the two monkeys exposed to 660 ppm died after 23 and 51 days, with severe brain hemorrhage and pulmonary abnormalities. The monkey exposed to 330 ppm acetonitrile exhibited unusual reflexes and excitability toward the end of the study. On gross examination, brain hemorrhage was also found in the monkey exposed to 330 ppm. Brain hemorrhages, hyper-excitability, and over-extension reflexes were also observed in three monkeys exposed to 350 ppm (approximately 30 mg/kg/day) of acetonitrile (Ref. 3). There were no signs of neurotoxicity reported for dogs.

In an embryo-fetal toxicity and teratogenicity study of acetonitrile, signs of neurotoxicity were found when acetonitrile was tested in the bred female New Zealand white rabbits receiving 2, 15, or 30 mg/kg/day by oral gavage (Ref. 20). Observations of dams at the high dose level showed neurological signs of ataxia, decreased motor activity, bradypnea, dyspnea, and impaired or lost righting reflex (Refs. 3 and 8).

Other laboratory studies also show that inhalation exposure to acetonitrile can adversely affect the nervous system of animals. In a report on acute exposure inhalation toxicity in rats submitted by E.I. du Pont de Nemours and Company (Refs. 3 and 21), toxicity was evaluated in groups of 10 male Sprague-Dawley rats exposed to acetonitrile for 4 hour periods. Dose levels and number of mortalities were not reported. Mortality was observed up to 24 hours post-exposure and the LC_{50} was determined to be 17,100 ppm. Clinical signs of neurotoxicity during exposure included irregular respiration, hyperemia followed by pale ears, face-pawing, and lack of coordination in all animals and unreactivity in decedents (Ref. 3).

In summary, subchronic exposures to acetonitrile can cause serious and irreversible health effects in animals at concentrations of acetonitrile at or near 350 ppm (approximately 30 mg/kg/day). Developmental studies in animals and acute inhalation studies in animals and exposures to humans provide additional support for the potential for acetonitrile

to cause severe neurological effects and even death in humans.

vi. *Other chronic effects*. Subchronic exposures of acetonitrile at concentrations ranging from 100 to 2,510 ppm (in several species) resulted in lung congestion and edema; increases in liver and kidney weight with swelling of the proximal and convulated tubules; cytoplasmic vacuolation of hepatocytes; brain hemorrhages; decreases in hemoglobin and hematocrit; severe eye irritation; decreases in thymus weight, increases in heart weight; and forestomach hyperplasia (Ref. 3). In addition, immunotoxic effects, such as a dose-dependent significant decrease in hematocrit, hemoglobin, red blood cells (RBC), white blood cells (WBC), and B-lymphocyte function, were observed in mice following inhalation exposure to acetonitrile (Refs. 3 and 22). There is uncertainty regarding the biological significance of the increases in relative liver weight, hepatic vacuolization, and some of the immunological changes observed after subchronic exposure since these effects were not seen following chronic dosing. It is possible that the lack of observed effects could be, however, the result of lower chronic exposure levels (Ref. 3). Chronic effects in rats and mice following chronic exposure to acetonitrile included increases in liver weights and forestomach lesions (Ref. 3). However, there is uncertainty regarding the biological significance of the forestomach lesions observed following inhalation exposure since oral exposure of acetonitrile as a result of the grooming of contaminated fur may also have been a contributing factor. Furthermore, it is difficult to assess the significance of the increases in liver weights without any information on the histopathological or functional changes (Ref. 3).

vii. *Toxicity related to ozone formation*. Acetonitrile is currently considered a VOC and, as such, has the potential to contribute to the formation of ozone in the troposphere (i.e., the lower atmosphere). As EPA has previously stated, ozone can affect structure, function, metabolism, pulmonary defense against bacterial infection, and extrapulmonary effects (Ref. 23). Among these extrapulmonary effects are: (1) Cardiovascular effects; (2) reproductive and teratological effects; (3) central nervous system effects; (4) alterations in red blood cell morphology; (5) enzymatic activity; and (6) cytogenetic effects on circulating lymphocytes. Accordingly, EPA has concluded that acetonitrile, as a VOC, has the potential to cause these effects.

3. *Ecotoxicity*. Acetonitrile is of low concern with respect to direct ecotoxicity based on measured data and Quantitative Structure Activity Relationship (QSAR) analysis. Acute acetonitrile toxicity for 96-hour fish and 48-hour daphnid exposures were 1,100 to 1,640 milligrams per liter (mg/L) (measured concentrations), and 4,900 mg/L, respectively (based on QSAR). Chronic acetonitrile toxicity for 21-day daphnid (reproduction) was greater than 200 mg/L (measured), and 470 mg/L for fish (based on QSAR) (Refs. 3 and 24).

Based on the limited number of laboratory studies conducted to date, the terrestrial toxicity of acetonitrile is low. No published experimental data are available for evaluating its bioaccummulation. Log bioconcentration factors for acetonitrile estimated using Lyman regression equations were −1.81 to 0.6 indicating no potential bioaccumulation (Refs. 3 and 25).

As a VOC, acetonitrile contributes to the formation of ozone in the environment. As EPA has previously stated (Ref. 23), ozone's effects on green plants include injury to foliage, reductions in growth, losses in yield, alterations in reproductive capacity, and alterations in susceptibility to pests and pathogens. Based on known interrelationships of different components of ecosystems, such effects, if of sufficient magnitude, may potentially lead to irreversible changes of sweeping nature to ecosystems.

D. Acute Exposure Assessment

Based on the results of animal studies, there are concerns for acute health effects associated with exposure to acetonitrile. Thus, pursuant to EPCRA section 313(d)(2)(A), EPA performed exposure assessments to determine whether acute health effects from acetonitrile would occur at concentrations reasonably likely to exist beyond the facility site boundaries as a result of continuous, or frequently recurring, releases. EPA's Toxic Release Inventory (TRI) release data were used to estimate acetonitrile exposures to the general population near the release sites. The fugitive emissions to air were the largest contributors to these exposures. Potential exposures due to water releases were also estimated.

1. *Ambient air exposure assessment*. Acetonitrile releases reported to TRI for 1995 and 1996 were used for the exposure assessment. Significant changes occurred between 1995 and 1996 with a greater than 50 percent increase in releases of acetonitrile occurring at the highest air releasing site. Short-term (acute exposure) air concentrations were estimated using the SCREEN3 and ISCST3 models. Among the ten top sites chosen for modeling, a plant in Memphis, Tennessee had the highest air releases for both 1995 and 1996, dominated by fugitive air releases. Using the SCREEN3 model, the estimated air concentrations of acetonitrile beyond facility site boundaries at sites with fugitive air emissions greater than 10,000 kilograms per year (kg/year) for 1995 and 1996 ranged from 4 to 36 milligrams per cubic meter (mg/m^3) (2.4 to 22 ppm) for 1 hour, and 1 to 14 mg/m^3 (0.9 to 8 ppm) for 24 hours, respectively.

Based on the 1995 data and the ISCST3 model, the 1 and 24 hours short-term (acute exposure) acetonitrile concentrations in air, at 100 meters distance from the source center of highest release, in the direction of highest concentration, are 16 and 2.3 mg/m^3 (or 9.52 and 1.37 ppm), respectively. Under the same model scenario, the 1996 data gave an estimated 23 and 3.3 mg/m^3 (or 13.5 and 2.0 ppm) of acetonitrile concentrations in air for the 1 and 24 hour short-term exposure, respectively. Other air concentrations of acetonitrile for ten top facilities were also modeled and the estimated data are summarized in the General Sciences Corporation (GSC) modeling support for exposure assessment of acetonitrile (Ref. 26). The highest estimates were at those facilities with boundaries of approximately ¼ mile (400 meters) from the site center or less (Refs. 4 and 26).

The short-term air modeling was intended to represent acute exposure scenarios for populations spending time in the surroundings of facilities, outside site boundaries, but not necessarily resident. However, the results should be considered ''what-if'' rather than established as high end, because of factors such as variability in meteorology, and uncertainties in release quantities and durations. It is important to recognize that the ambient air concentration estimates use the assumption that releases continue over 365 days per year, 24 hours per day at a constant rate. If annual releases occurred over shorter time periods, the corresponding short-term concentrations would be higher than those presented in the exposure assessment report. For example, if a facility releases approximately 10,000 kilograms of fugitive air releases per year over 30 days per year rather than 365 days per year, then the upper limit of the screening range would exceed 40 mg/m^3, exceeding the value (36 mg/m^3) shown for the highest release of more than 200,000 pounds per year. The

concentrations estimated show a screening range (using SCREEN3 model at a distance of 100 meters from the source center) and provide key results for selected sites. The data also shows maximum results beyond facility boundaries, using distances from site centers indicated by site layouts in the industry report (Refs. 4 and 27). These estimated values of acetonitrile in air are well below those concentration levels that produced acute effects in animal studies.

2. *Drinking water exposure assessment*. Both direct and indirect releases to water were modeled using river reach harmonic mean flows for long-term and low flow data for short term. The REACHSCAN model was used to estimate the contamination of acetonitrile at drinking water utility intakes downstream from facilities releasing to water or making offsite transfers to waste-water treatment facilities. While some locations have low to mid parts per billion (ppb) levels, few intake locations of drinking water utilities have levels above 1 ppb (1 microgram per liter). Based on 1995 TRI water release data, the highest exposure potential with drinking water intakes downstream were found for an indirect discharger in Pennsylvania, with annual concentration of 100 ppb and the short-term concentration of 350 ppb. However, that facility changed reporting from ''transfers to publicly owned treatment works (POTWs)'' to ''other offsite transfers'' for 1996; several other facilities also reduced or ended water releases or transfers to POTWs for 1996. The highest drinking water utility intake level found using 1996 TRI data was approximately 2 ppb for low flow conditions, and 0.7 ppb for typical conditions (downstream from a facility in Rock Hill, South Carolina). Several fresh-water locations without verified drinking water intakes have mid ppb (e.g., 200 ppb) estimated levels (Ref. 4).

Some potential drinking water situations have not been quantified due to lack of data. For example, offsite transfers to POTWs include several sites in Puerto Rico, for which surface water data have not been retrieved. Underground injection wells also may form sources of contamination to drinking water wells in ground water, in the event of containment failure (Ref. 4). Atmospheric deposition of acetonitrile can also contribute to surface water contamination near facilities releasing to air (Ref. 4).

3. *Exposure evaluation*. EPA's exposure assessment attempted to determine whether, as a result of releases from EPCRA section 313 covered facilities, acetonitrile is known to cause or can reasonably be anticipated to cause significant adverse acute human health effects at concentration levels that are reasonably likely to exist beyond facility site boundaries as a result of continuous or frequently recurring releases. The modeling used released data reported under EPCRA section 313 and included both conservative and non-conservative assumptions concerning releases and facility site information. Non-conservative assumptions included the assumption that EPCRA section 313 reported releases are spread over 365 days per year and 24 hours per day. Given a shorter release period, estimated exposures could be significantly higher. Under the conditions modeled here EPA believes it is unlikely that concentrations of acetonitrile sufficient to cause acute toxicity will exist beyond a facility's boundaries as a result of continuous, or frequently reoccurring, releases. This is because the exposure concentrations that resulted from the modeling (9.52 and 1.37 ppm) are below the concentrations that have caused acute toxicity in laboratory animals (500 ppm).

V. Summary of Technical Review

There is sufficient evidence to support a high level of concern for potential neurotoxicity and death following repeated exposure to acetonitrile. This comes from several lines of evidence. In repeated dose (subchronic) inhalation experiments in monkeys, neurological signs of toxicity (brain hemorrhages, hyper-excitability, and over-extension reflexes) and death were observed at concentrations of acetonitrile at or near 350 ppm (approximately 30 mg/kg/day). For effects seen in both the monkey and rabbit studies, the neurotoxicity risk assessment guidelines recommend that these endpoints be included as examples of possible indicators of an adverse neurotoxic effect (Ref. 28). Structural or neuropathological endpoints could include hemorrhage in nerve tissue. Neurological endpoints could include increases or decreases in motor activity and changes in motor coordination. When pregnant rabbits were exposed to the same amount of acetonitrile during gestation, signs of neurotoxicity (including ataxia (muscle incoordination), decreased motor activity, bradypnea (abnormally slow breathing), dyspnea (labored or difficult breathing), and impaired or lost righting reflex) and an increased incidence of maternal mortality were also observed. These effects are consistent with acute inhalation exposures to high concentrations of acetonitrile in humans in which the central nervous system is widely affected (exhibiting signs of salivation, nausea, vomiting, anxiety, confusion, hyperpnea, dyspnea, rapid pulse, unconsciousness, and convulsions followed by death from respiratory failure). The neurological effects seen in the developmental and acute studies provide supplemental support for the determination that acetonitrile can reasonably be anticipated to cause chronic neurotoxicity. These results are also consistent with those effects seen with inorganic cyanide and other aliphatic nitriles exposures, suggesting that the toxic effects of acetonitrile may be correlated with the metabolic release of cyanide.

Acetonitrile is currently considered a VOC and, as such, it contributes to the formation of tropospheric ozone which, as EPA has previously determined, can cause significant adverse effects to human health and the environment (Ref. 23).

The main effects of acetonitrile reported in humans (from accidental poisoning) are likely due to acute inhalation exposures to high concentrations. Based on the results of animal studies, there are concerns for acute health effects associated with exposure to acetonitrile. However, based on EPA's exposure assessment, it is unlikely that concentrations of acetonitrile, sufficient to cause acute toxicity, will exist beyond a facility's boundaries as a result of continuous, or frequently recurring, releases. There is not sufficient information to support a concern for carcinogenicity, mutagenicity, or reproductive toxicity. The case for developmental toxicity is weak. Some studies in rats produced no signs of developmental toxicity even in the presence of maternal toxicity. Other studies exhibited signs of developmental toxicity, however, in the presence of extreme maternal mortality. There is uncertainty regarding the biological significance of the increases in relative liver weight, hepatic vacuolization, and some of the immunological changes observed after subchronic exposure since these effects were not seen following chronic dosing. It is possible that the lack of observed effects could be, however, the result of lower chronic exposure levels. Acetonitrile is of low concern with respect to direct ecotoxicity based on measured data and QSAR analysis.

VI. Rationale for Denial

EPA is denying the petition submitted by BP and GNICC to delete acetonitrile from the EPCRA section 313 list of toxic

chemicals. This denial is based on EPA's conclusion that acetonitrile can reasonably be anticipated to cause serious or irreversible chronic health effects in humans, including neurotoxicity and death. Chronic health effects may result after acute, subchronic, or chronic exposures. EPA determines whether an effect is best considered to be chronic by looking at a number of factors, among which is the length of time it takes for the effect to manifest and the extent to which it persists after exposure to the toxicant ends. Acute or subchronic exposure to acetonitrile can produce serious and irreversible health effects, including brain hemorrhages and death. In addition, acute or subchronic exposure to acetonitrile produce the following serious health effects: Hyper-excitability, over-extension reflexes, ataxia (muscle incoordination), decreased motor activity, bradypnea (abnormally slow breathing), dyspnea (labored or difficult breathing), and impaired or lost righting reflex. Many of these effects (e.g., over-extension reflexes and hyper excitability) manifest toward the end of the exposure period and are thus considered chronic effects. Data from animal studies indicate that neurotoxicity and death can occur at the relatively low dose of approximately 30 mg/kg/day. Based on these data, EPA considers acetonitrile to have moderately high to high chronic toxicity. Therefore, EPA has concluded that acetonitrile meets the listing criteria of EPCRA section 313 (d)(2)(B).

EPA has concluded that acetonitrile meets the listing criteria of EPCRA section 313(d)(2)(B) and (d)(2)(C) due to it contributing to the formation of ozone. EPA has concluded that VOCs, such as acetonitrile, contribute to the formation of tropospheric ozone which is known to cause significant adverse effects to human health and the environment. EPA has previously stated that ozone meets the listing criteria of EPCRA section 313(d)(2)(B) and (d)(2)(C) (59 FR 61432, November 30, 1994). EPA has stated in prior **Federal Register** notices (54 FR 4072, January 27, 1989; 54 FR 10668, March 15, 1989; 59 FR 49888, September 30, 1994; 60 FR 31643, June 16, 1995; and 63 FR 15195, March 30, 1998) that, because VOCs contribute to the formation of tropospheric ozone, they meet the criteria for listing under EPCRA section 313. EPA has also stated (54 FR 4072, January 27, 1989 and 54 FR 10668, March 15, 1989) that while it is not EPA's intention to include all VOC chemicals on the EPCRA section 313 list, those VOCs whose volume of use or emissions are large enough to raise substantial VOC concerns would be retained on the EPCRA section 313 list. Acetonitrile is a VOC with a high production volume, and therefore, EPA has determined that acetonitrile should remain on the EPCRA section 313 list of toxic chemicals. In EPA's most recent petition denial based on VOC concerns (63 FR 15195, March 30, 1998), the Agency provided further explanation concerning its rationale for determining that indirect effects, such as those caused by VOCs, meet the EPCRA section 313 listing criteria.

Because EPA believes that acetonitrile has moderately high to high chronic toxicity, EPA does not believe that an exposure assessment is appropriate for determining whether acetonitrile meets the criteria of EPCRA section 313(d)(2)(B). This determination is consistent with EPA's published statement clarifying its interpretation of the section 313(d)(2) and (d)(3) criteria for modifying the section 313 list of toxic chemicals (59 FR 61432, November 30, 1994).

As mentioned under Unit III. of this preamble, the petitioner's have submitted a petition to EPA's OAR to add acetonitrile to the list of negligibly photoreactive chemicals under 40 CFR 51.100(s)(1). Chemicals that appear on this list are excluded from EPA's definition of a VOC, since they have been determined to have a negligible contribution to tropospheric ozone formation. OAR's initial review of the petition indicates that acetonitrile may be a negligibly photoreactive chemical (Ref. 29). If OAR's initial assessment is confirmed and a rule is issued that adds acetonitrile to the list of negligibly photoreactive chemicals under 40 CFR 51.100(s)(1), then any concerns based solely on acetonitrile being listed as a VOC would no longer be a basis for listing acetonitrile under EPCRA section 313. However, since EPA has also concluded that acetonitrile meets the EPCRA section 313 criteria for listing based on concerns for chronic neurotoxicity, EPA's decision to deny the petition to delete acetonitrile from the EPCRA section 313 list of toxic chemicals would not be affected by a change in acetonitrile's status as a VOC.

VII. References

1. British Petroleum, Inc. (BP) and GNI Chemicals Corporation (GNICC), 1998. Petition to Delist Acetonitrile from the List of Toxic Chemicals under the Authority of Section 313 of the Emergency Planning and Community Right-to-Know Act (EPCRA) of 1986. BP Chemicals Inc. and GNI Chemicals Corp. (February 1998).

2. United States Environmental Protection Agency (U.S. EPA), Office of Pollution Prevention and Toxics (OPPT), Tou, Jenny, 1998. Chemistry Report for Acetonitrile in Response to EPCRA Section 313 Delisting Petition. (June 1998).

3. USEPA, OPPT, Anitole, Katherine, 1998. Hazard Assessment for Acetonitrile in Response to Section 313 Delisting Petition of BP Chemicals Inc. and GNI Chemicals Corporation. (June 1998).

4. USEPA, OPPT, Nold, Annett, 1998. Exposure Assessment for Acetonitrile in Response to Delisting Petition. (July 1998).

5. USEPA, OPPT, Miller, Jim, 1998. Economic Analysis of the Proposed Deletion of Acetonitrile from the EPCRA Section 313 List of Toxic Chemicals. (March 1998).

6. USEPA, OPPT, Blouin, John, 1998. Engineering Analysis of the Proposed Deletion of Acetonitrile from the EPCRA Section 313 List of Toxic Chemicals. (April 1998).

7. The Merck Index. An Encyclopedia of Chemicals, Drugs, and Biologicals, 11th Edition, p.63, 1989, Merck Co., Inc.

8. World Health Organization (WHO), 1993. International Program on Chemical Safety (IPCS), Environmental Health Criteria 154 - Acetonitrile, World Health Organization.

9. National Cancer Institute (NCI)/ National Toxicological Program (NTP), 1996. NTP Technical Report of the Toxicology and Carcinogenesis of Acetonitrile (CAS No. 75–05–8) in F344/N Rats and B6C3F1 Mice (inhalation studies). Carcinogenesis Technical Report Series; National Cancer Institute/National Toxicology Program; U.S. Department of Health and Human Services (U.S. HHS).

10. Taskinen, H., Kyyronen, P., Hemminki, K., Hoikkala, M., Lajunen, K., and Lindbohm, M., 1994. Laboratory Work and Pregnancy Outcome. *JOM* 36:311–319.

11. USEPA, OPPT, 1998. Hazard Assessment Emphasizing Epidemiological Data for the Acetonitrile Delisting Petition. Memorandum dated March 13, 1998, from Andrea Pfahles-Hutchens, Existing Chemicals Assessment Branch, to Katherine Anitole, Existing Chemicals Assessment Branch, RAD. Washington, DC: USEPA.

12. USEPA, OPPT, 1998, Health Effects Test Guidelines OPPTS 870.3700: Prenatal Development Toxicity Study, (EPA 712–C–98–207, August 1998).

13. Willhite, C. 1983. Developmental Toxicity of Acetonitrile in the Syrian

Golden Hamster. *Teratology* 27, 313–325.

14. Smith, M.K., George, E.L., Zenick, H., Manson, J.M., and Stober, J.A. 1987. Developmental Toxicity of Halogenated Acetonitriles: Drinking Water By-Products of Chlorine Disinfection. *Toxicol.* 46, 83–93.

15. Johannsen, F.R., G.L., Levinskas, P.E., Berteau and D.E. Rodwell. 1986. Evaluation of the Teratogenic Potential of Three Aliphatic Nitriles in the Rat. *Fund. Appl. Toxicol.* 7, 33–40.

16. Morrissey, R.E., Schwetz, B.A., Lamb, J.C., Ross, M.Dd., Teague, J.L. and Morris, R.W. 1988. Evaluation of Rodent Sperm, Vaginal Cytology, and Reproductive Organ Weight Data from National Toxicology Program 13-Week Studies. *Fund. Appl. Toxicol.* 11, 343–358.

17. Hazardous Substances Data Bank (HSDB), 1994. MEDLARS Online Information Retrieval System, National Library of Medicine. (Retrieved August, 1994).

18. IRIS. U.S. Environmental Protection Agency's Integrated Risk Information System (IRIS).

19. Pozzani, U.C., Carpenter, C.P., Palm. P.E., Weil, C.S. and Nair, J.H. 1959. An Investigation of the Mammalian Toxicity of Acetonitrile. *J. Occup. Med.* 12, 634–642.

20. Argus Research Laboratories, Inc., 1984. Embryo-fetal Toxicity and Teratogenicity Study of Acetonitrile in New Zealand White Rabbits (Segment II Evaluation). Argus Research Laboratories, Inc. Project No. 419–001, Final Report. EPA Document No. 40–8446070, Fiche No. OTS0507279.

21. E.I. du Pont de Nemours Company, 1968. Acute Inhalation Toxicity in Rats with Cover Letter, Haskell Laboratory for Toxicology and Industrial Medicine. EPA Document No. 878220234, Fiche No. OTS0215023.

22. Immunquest (1984). EPA Docket Office: FYI–OTS–0284–0292.

23. USEPA. ''Addition of Certain Chemicals.'' Proposed rule, (59 FR 1788, January 12, 1994).

24. USEPA, OPPT, 1994. Estimating Toxicity of Industrial Chemicals to Aquatic Organisms using Structure-Activity Relationships. (May 1994)

25. Screening Information Data Set (SIDS)/Organization for Economic Cooperation and Development (OECD), 1997. SIDS Initial Assessment Profile (Draft) on Acetonitrile. (March 1997).

26. General Sciences Corporation (GSC), 1998. ''Modeling Support for Exposure Assessment of Acetonitrile,'' prepared for Exposure Assessment Branch, OPPT. EPA Contract No. 68–W7–0030, Work Assignment No. II–1. (Final Report for Acetonitrile, July 1998).

27. Trinity Consultants (Dallas, Texas), 1998. ''Refined Modeling for Ten Acetonitrile Emitting Facilities,'' prepared for BP Chemicals and GNI Group, Inc., (January 20, 1998), Project 97440.0200.

28. USEPA. ''Proposed Guidelines for Neurotoxicity Risk Assessment.'' Notice, (60 FR 192, October 4, 1995).

29. USEPA. ''Photochemical Reactivity of Acetonitrile.'' Memorandum from G. T. Helms to Maria Doa, (October 1, 1998).

List of Subjects in 40 CFR Part 372

Environmental protection, Chemicals, Community right-to-know, Hazardous substances, Intergovernmental relations, Reporting and recordkeeping requirements, Superfund, Toxic chemicals.

Dated: February 24, 1999.

Susan H. Wayland,

Acting Assistant Administrator for Prevention, Pesticides and Toxic Substances.

[FR Doc. 99–5495 Filed 3–4–99; 8:45 am]

BILLING CODE 6560–50–F

DEPARTMENT OF TRANSPORTATION

National Highway Traffic Safety Administration

49 CFR Part 571

[DOT Docket No. NHTSA–99–5157]

RIN 2127–AH03

Federal Motor Vehicle Safety Standards; Bus Emergency Exits and Window Retention and Release

AGENCY: National Highway Traffic Safety Administration (NHTSA), DOT.

ACTION: Notice of proposed rulemaking.

SUMMARY: In this document, NHTSA proposes to amend the Federal Motor Vehicle Safety Standard on bus emergency exits and window retention and release by regulating the location of the anchorages for wheelchair securement devices. NHTSA is issuing this proposal to ensure that wheelchair securement anchorages and devices cannot be installed, and wheelchairs cannot be secured, in locations where they will block access to any exit needed for school bus evacuation in the event of an emergency. This proposal applies to school buses in which wheelchair positions are provided. Nothing in this rulemaking would require that wheelchair positions be provided.

DATES: You should submit your comments early enough to ensure that Docket Management receives them not later than May 4, 1999.

ADDRESSES: You should mention the docket number of this document in your comments and submit your comments in writing to: Docket Management, Room PL–401, 400 Seventh Street, S.W., Washington, D.C., 20590.

You may call the Docket at 202–366–9324. You may visit the Docket from 10:00 a.m. to 5:00 p.m., Monday through Friday.

FOR FURTHER INFORMATION CONTACT: For non-legal issues, you may call Mr. Charles Hott, Office of Crashworthiness Standards at (202) 366–0247. His FAX number is (202) 493–2739.

For legal issues, you may call Ms. Dorothy Nakama, Office of the Chief Counsel at (202) 366–2992. Her FAX number is (202) 366–3820.

You may send mail to both of these officials at National Highway Traffic Safety Administration, 400 Seventh St., S.W., Washington, D.C., 20590.

SUPPLEMENTARY INFORMATION:

Background

NHTSA has long recognized the safety need for school buses to provide means for readily accessible emergency egress in the event of a crash or other emergency. The agency addressed this safety need by issuing Safety Standard No. 217, *Bus Emergency Exits and Window Retention Release* (49 CFR Section 571.217). Standard No. 217 includes emergency exit requirements for school buses. The standard requires that all new school buses have either (1) one rear emergency door, or (2) one emergency door that is located on the vehicle's left side, in the rear half of the bus passenger compartment, and that is hinged on its forward side and one push-out rear window. (See S5.2.3.1)

As a result of incidents like the 1988 Carrollton, Kentucky, tragedy, in which 27 persons died in a school bus fire following a crash, NHTSA amended Standard No. 217 (November 2, 1992, 57 FR 49413) by revising the minimum requirements for school bus emergency exits, requiring additional emergency exit doors on school buses, and improving access to school bus emergency doors. In the final rule, the agency stated that the preferred method of providing access to side emergency exit doors was through creating a dedicated aisle, and thus, S5.4.2.1(2) and Figures 5B and 5C were added to the standard to require a 30 centimeter (12 inch) wide aisle to provide access to side emergency exit doors.

In a final rule published on January 15, 1993 (58 FR 4586), NHTSA amended

Standard No. 222, *School bus passenger seating and crash protection* (49 CFR Section 571.222) by promulgating minimum safety requirements for school buses designed to transport persons in wheelchairs. Wheelchair securement devices and occupant restraint systems provided in these school buses must meet specified performance requirements. One requirement is that the wheelchair securement anchorages at each wheelchair securement location must be situated so that a wheelchair can be secured in a forward-facing position. Another is that wheelchair securement devices must secure wheelchairs at two points on the front of each wheelchair and two points on the rear (see S5.4.1.2). The amendments to Standard No. 222 did not address the location of wheelchair securement anchorages within the school bus itself.

In April 1996, the State of New York's Department of Transportation (NYDOT) asked whether wheelchair positions must meet the clearance specifications in S5.4.2.1 (*School bus emergency exit opening*) of Standard No. 217. According to NYDOT, some school districts in New York have requested to purchase school buses whose wheelchair anchorages are placed in front of emergency exits. This is done apparently to maximize the number of seating positions on the school bus. The alternative would be to remove school bus seats to make room for the anchorages. Use of these wheelchair anchorages may result in wheelchairs being placed so as to block the aisle to the emergency exit. New York's regulations do not prohibit a school bus emergency exit from being blocked with a wheelchair while the bus is in motion. NYDOT officials provided schematics from three different bus manufacturers showing wheelchair anchorages placed in front of emergency exits.

The agency has interpreted the existing requirements in Standard No. 217 to permit wheelchair anchorages adjacent to emergency exits. In response to a letter from Thomas Built Buses asking if it would be a violation of Standard No. 217 to place a wheelchair anchorage within the clearance area specified by S5.4.2.1 for the rear emergency exit door, the agency stated, in a letter of October 28, 1977, that:

> NHTSA will measure the opening using the prescribed parallelepiped device as the vehicle is constructed in its unloaded condition. Since the wheelchair would not be present when the vehicle was in its unloaded condition, your location of the wheelchair would not violate the standard.

While this interpretation is consistent with other interpretations discussing the conditions under which NHTSA will conduct compliance tests, NHTSA is concerned that it could lead to safety problems.

Access to Side Door Emergency Exits and Rear Door Emergency Exits

Since the initial adoption of the school bus standards, NHTSA has conducted rulemaking on two separate occasions to ensure the availability and accessibility of school bus exits.

Rear Emergency Exit Door

Access to the rear emergency exit door was established in a final rule of January 27, 1976 (41 FR 3871). The rule established a 45 inch x 25 inch x 12 inch (1143 mm x 610 mm x 305 mm) space in the rear emergency exit door for school buses with a gross vehicle weight rating over 4536 kg (10,000 lb.).

Side Emergency Exit Doors

Side door emergency access requirements were established in a final rule of November 2, 1992 (57 FR 49413). In specifying a minimum dedicated aisle of at least 30 cm, the rule prohibited the placement of any seats within the aisle unless the seats have bottoms that automatically flip up when unoccupied and assume a vertical position outside the aisle.

In the March 15, 1991 NPRM (56 FR 11153) that preceded the November 1992 final rule, NHTSA had considered establishing for side doors a partially dedicated aisle similar to that for rear emergency exit doors. It would have created a partially dedicated aisle by requiring the unobstructed passage of a parallelepiped of identical size (45 inch x 25 inch x 12 inch) (1143 mm x 610 mm x 305 mm) as the rear door opening 12 inches (305 mm) into the passenger compartment. NHTSA recognized that the 1143 mm x 610 mm x 305 mm alternative would have improved access to the side emergency exit door, but would eliminate two seating positions, one next to the side door, and the one immediately behind that position. Further, under Standard No. 222, *School bus passenger seating and crash protection*, it would have been necessary to provide a barrier in front of the first seating position located next to the side of the bus and to the rear of the side door. NHTSA expressed its belief that the cost of implementing the 1143 mm x 610 mm x 305 mm parallelepiped option would be ''considerable.'' (56 FR at 11160) Although some public commenters supported adopting the option for the side emergency exit door, the agency decided not to adopt it, concluding that ''there is not sufficient justification or experience to require dedicated aisles.'' (57 FR at 49419).

Safety Need; Proposal

Although the agency conceded in its 1977 interpretation that the standard would permit a wheelchair anchorage to be located in an exit, it had not expected that anchorages would actually be installed in this way. The rules on rear and side exits established that such exits are essential to the safety of bus occupants. The information supplied by NYDOT suggests that an amendment to Standard No. 217 is necessary to ensure that wheelchairs cannot be secured in a way that defeats the purpose of the exit requirements.

NHTSA is accordingly proposing to amend Standard No. 217 to prohibit the placement of wheelchair securement anchorages in the aisle of an emergency exit.[1] In addition, for any side emergency exit door, NHTSA proposes to prohibit placement of any anchorage within 685 mm (25 inches) on either side from the center of the school bus aisle. This aspect of NHTSA's proposal for side emergency exits is intended to prevent the placement of anchorages at locations where they could be used to secure a wheelchair directly in front of the emergency exit. NHTSA is concerned that persons in wheelchairs may be injured by persons evacuating the bus. Together, these prohibitions would prevent wheelchair securement anchorages and devices from being installed, and wheelchairs from being secured, in a location where they would block access to an emergency exit.

As an alternative to an anchorage location requirement, NHTSA is requesting comments on whether an information requirement would achieve the same result. Rather than proposing a broad prohibition against installing any wheelchair securement anchorages in a zone on either side of an exit, NHTSA's goals might be achieved by labels. Possible regulatory text for the warning to be placed next to each emergency exit is set forth below:

> **WARNING: It is unsafe to secure a wheelchair in a location where the wheelchair blocks the aisle to an exit.**

NHTSA notes that the proposed changes in this notice of proposed rulemaking would only apply to those school buses in which wheelchair securement locations are provided. Nothing in this proposal would require that a school bus have a wheelchair securement location or that a manufacturer provide a wheelchair securement location on a school bus.

[1] NHTSA notes that since it can regulate only how new school buses are manufactured, and not how school buses are used, it cannot take the approach of proposing to specify where school bus operators place wheelchairs in a school bus.

This proposal does not apply to wheelchair lift doors that are not considered emergency exits.

NHTSA seeks public comment—

1. On the extent to which school buses have been or are being designed so that wheelchairs can be secured so as to hinder access to any emergency exit.

2. On whether the proposed regulatory language would achieve the desired result of preventing wheelchair securement anchorages and devices and wheelchairs from being positioned so that they block access to the emergency exit.

3. On whether the proposed regulatory language could be more narrowly crafted so that, for instance, it would not prohibit wheelchair securement anchorages from being installed just forward of a side emergency exit if the wheelchair securement devices attached to those anchorages could be used only for the purpose of installing a wheelchair *forward* of those anchorages, and thus forward of the exit aisle as well. An example of such language is set forth below:

''A school bus shall not have a wheelchair securement device that can be used, in combination with other wheelchair securement devices installed in the bus, to secure a wheelchair so that any portion of the wheelchair is located within the area defined—

(a) on the front side, by a transverse vertical plane tangent to the front edge of a side exit door,

(b) on the back side, by a transverse vertical plane tangent to the rear edge of that door,

(c) on the outboard side, by the plane of the doorway opening, and

(d) on the inboard side, by a longitudinal vertical plane passing through the longitudinal centerline of the bus.''

4. On the extent to which seating capacity (both wheelchair and non-wheelchair) would be reduced in any school buses produced in the future if this proposal were made final.

5. Whether the need for safety would be met if, in lieu of the restrictions on wheelchair anchorages proposed in this NPRM, NHTSA were to require placing labels on schoolbuses with wheelchair locations that state it is unsafe to use a wheelchair securement device to secure a wheelchair in a location where the wheelchair blocks the aisle to an exit. Would the possibility of tort actions based on those labels effectively discourage the securing of wheelchairs in emergency exit aisles?

6. Should NHTSA both require a warning label and prohibit the installation of wheelchair securement devices that make it possible to secure wheelchair in an area where it will block access to an emergency exit?

7. NHTSA seeks comment on whether these requirements should apply to all buses. If so, how can this be incorporated into the regulatory text? NHTSA is not aware of any other bus types that are manufactured with devices designed to secure wheelchairs that will block access to an emergency exit.

In addition to the above, the agency is also proposing to amend the regulatory text in S5.4.2.1(a)(1) to clarify that the bottom parallelepiped is to fit entirely within the door of the school bus. The current language specifies that the parallelepiped be in contact with the school bus floor at all times. Previous agency interpretations have indicated that this means that the rearmost surface of the parallelepiped be tangent to the plane of the rear emergency door opening.

Leadtime

NHTSA proposes that the proposed amendments, if made final, would take effect one year after the publication of the final rule. NHTSA believes one year is enough lead time for industry to make any necessary change. Manufacturers of school buses with wheelchair positions would be given the option of complying immediately with the new requirements. If this proposal were made final, NHTSA would encourage manufacturers to comply as soon as possible.

Regulatory Analyses and Notices

Executive Order 12866 and DOT Regulatory Policies and Procedures

Executive Order 12866, ''Regulatory Planning and Review'' (58 FR 51735, October 4, 1993), provides for making determinations whether a regulatory action is ''significant'' and therefore subject to Office of Management and Budget (OMB) review and to the requirements of the Executive Order. The Order defines a ''significant regulatory action'' as one that is likely to result in a rule that may:

(1) Have an annual effect on the economy of $100 million or more or adversely affect in a material way the economy, a sector of the economy, productivity, competition, jobs, the environment, public health or safety, or State, local, or Tribal governments or communities;

(2) Create a serious inconsistency or otherwise interfere with an action taken or planned by another agency;

(3) Materially alter the budgetary impact of entitlements, grants, user fees, or loan programs or the rights and obligations of recipients thereof; or

(4) Raise novel legal or policy issues arising out of legal mandates, the President's priorities, or the principles set forth in the Executive Order.

We have considered the impact of this rulemaking action under Executive Order 12866 and the Department of Transportation's regulatory policies and procedures. This rule is not considered a significant regulatory action under section 3(f) of the Executive Order 12866. Consequently, it was not reviewed by the Office of Management and Budget. This rulemaking document was not reviewed by the Office of Management and Budget under E.O. 12866, ''Regulatory Planning and Review.'' The rulemaking action is also not considered to be significant under the Department's Regulatory Policies and Procedures (44 FR 11034; February 26, 1979).

For the following reasons, NHTSA believes that this proposal, if made final, would not have any cost effect on school bus manufacturers. When it amended Standard No. 222 to specify requirements for wheelchair securement anchorages and devices, NHTSA never envisioned that the anchorages would be placed so that wheelchair securement anchorages and devices or secured wheelchairs would block access to any exit. In analyzing the potential impacts of that rulemaking, NHTSA anticipated that vehicle manufacturers would, if necessary, remove seats to make room for securing wheelchairs in a forward-facing position and that, if necessary, additional buses would be purchased to offset the lost seating capacity. To the extent that vehicle manufacturers have not removed any seats and have instead installed wheelchair securement anchorages and devices in locations where the securing of wheelchairs will result in the blocking of exits, the agency overestimated the costs of that earlier rulemaking. If securement devices were being so installed, the impacts of adopting the amendments proposed in this notice would be to conform vehicle manufacturer practices to the assumptions made in the analysis of that earlier rulemaking.

Because the economic impacts of this proposal are so minimal, no further regulatory evaluation is necessary.

Executive Order 12612

We have analyzed this proposal in accordance with Executive Order 12612 (''Federalism''). We have determined that this proposal does not have sufficient Federalism impacts to warrant the preparation of a federalism assessment.

Executive Order 13045

Executive Order 13045 (62 FR 19885, April 23, 1997) applies to any rule that: (1) is determined to be ''economically significant'' as defined under E.O. 12866, and (2) concerns an environmental, health or safety risk that NHTSA has reason to believe may have a disproportionate effect on children. If the regulatory action meets both criteria, we must evaluate the environmental health or safety effects of the planned rule on children, and explain why the planned regulation is preferable to other potentially effective and reasonably feasible alternatives considered by us.

This rule is not subject to the Executive Order because it is not economically significant as defined in E.O. 12866. It does involve decisions based on health risks that disproportionately affect children on schoolbuses. However, this rulemaking serves to reduce, rather than increase, that risk.

Executive Order 12778

Pursuant to Executive Order 12778, ''Civil Justice Reform,'' we have considered whether this proposed rule would have any retroactive effect. We conclude that it would not have such an effect. Under 49 U.S.C. 30103, whenever a Federal motor vehicle safety standard is in effect, a State may not adopt or maintain a safety standard applicable to the same aspect of performance which is not identical to the Federal standard, except to the extent that the state requirement imposes a higher level of performance and applies only to vehicles procured for the State's use. 49 U.S.C. 30161 sets forth a procedure for judicial review of final rules establishing, amending or revoking Federal motor vehicle safety standards. That section does not require submission of a petition for reconsideration or other administrative proceedings before parties may file suit in court.

Regulatory Flexibility Act

Pursuant to the Regulatory Flexibility Act (5 U.S.C. 601 *et seq.*, as amended by the Small Business Regulatory Enforcement Fairness Act (SBREFA) of 1996) whenever an agency is required to publish a notice of rulemaking for any proposed or final rule, it must prepare and make available for public comment a regulatory flexibility analysis that describes the effect of the rule on small entities (i.e., small businesses, small organizations, and small governmental jurisdictions). However, no regulatory flexibility analysis is required if the head of an agency certifies the rule will not have a significant economic impact on a substantial number of small entities. SBREFA amended the Regulatory Flexibility Act to require Federal agencies to provide a statement of the factual basis for certifying that a rule will not have a significant economic impact on a substantial number of small entities.

The Administrator has considered the effects of this rulemaking action under the Regulatory Flexibility Act (5 U.S.C. § 601 *et seq.*) and certifies that this proposal would not have a significant economic impact on a substantial number of small entities. The rationale for this certification is that, as noted immediately above, NHTSA is not aware that any school bus manufacturer, or any small school bus manufacturer, is presently manufacturing school buses with wheelchair securement anchorages or devices that may result in blocking access to an emergency exit, or that any small school or school district has school buses with wheelchair securement anchorages or devices that may result in blocking access to an emergency door. Accordingly, the agency believes that this proposal would not affect the costs of the manufacturers of school buses considered to be small business entities. A small manufacturer could meet the new requirements by placing a wheelchair securement anchorage or device in a location other than in an exit aisle. Changing the placement of a wheelchair securement anchorage or device in this fashion might necessitate the removal of a seat in some cases. In those instances, there would be a small net loss of passenger capacity.

The Regulatory Flexibility Act does not, therefore, require a regulatory flexibility analysis.

National Environmental Policy Act

We have analyzed this proposal for the purposes of the National Environmental Policy Act and determined that it would not have any significant impact on the quality of the human environment.

Paperwork Reduction Act

Under the Paperwork Reduction Act of 1995 (PRA), a person is not required to respond to a collection of information by a Federal agency unless the collection displays a valid OMB control number. This proposal does not propose any new information collection requirements. If we issue a final rule that requires a label, we will obtain the necessary clearance under the PRA.

National Technology Transfer and Advancement Act

Section 12(d) of the National Technology Transfer and Advancement Act of 1995 (NTTAA), Public Law 104–113, section 12(d) (15 U.S.C. 272) directs us to use voluntary consensus standards in our regulatory activities unless doing so would be inconsistent with applicable law or otherwise impractical. Voluntary consensus standards are technical standards (e.g., materials specifications, test methods, sampling procedures, and business practices) that are developed or adopted by voluntary consensus standards bodies, such as the Society of Automotive Engineers (SAE). The NTTAA directs us to provide Congress, through OMB, explanations when we decide not to use available and applicable voluntary consensus standards.

After conducting a search of available sources, we have determined that there are no available and applicable voluntary consensus standards that we can use in this notice of proposed rulemaking. We have searched the SAE's Recommended Practices applicable to buses, and have found no standards prohibiting placement of wheelchairs in front of emergency exit doors. We have also reviewed the National Standards for School Buses and School Bus Operations (NSSBSBO) (1995 Revised Edition). The NSSBSBO includes a subsection under ''Standards for Specially Equipped School Buses'' called ''Securement and Restraint System for Wheelchair/Mobility Aid and Occupant.'' Paragraph 1.k. of this provision (on page 61) states: ''The securement and restraint system shall be located and installed such that when an occupied wheelchair/mobility aid is secured, it does not block access to the lift door.'' Since this provision does not address blocking access to an emergency exit, we have decided not to use it in the rulemaking at issue.

Unfunded Mandates Reform Act

Section 202 of the Unfunded Mandates Reform Act of 1995 (UMRA) requires Federal agencies to prepare a written assessment of the costs, benefits and other effects of proposed or final rules that include a Federal mandate likely to result in the expenditure by State, local or tribal governments, in the aggregate, or by the private sector, of more than $100 million in any one year (adjusted for inflation with base year of 1995). Before promulgating a NHTSA rule for which a written statement is needed, section 205 of the UMRA generally requires us to identify and

consider a reasonable number of regulatory alternatives and adopt the least costly, most cost-effective or least burdensome alternative that achieves the objectives of the rule. The provisions of section 205 do not apply when they are inconsistent with applicable law. Moreover, section 205 allows us to adopt an alternative other than the least costly, most cost-effective or least burdensome alternative if we publish with the final rule an explanation why that alternative was not adopted.

This proposal would not result in costs of $100 million or more to either State, local, or tribal governments, in the aggregate, or to the private sector. Thus, this proposal is not subject to the requirements of sections 202 and 205 of the UMRA.

Regulation Identifier Number (RIN)

The Department of Transportation assigns a regulation identifier number (RIN) to each regulatory action listed in the Unified Agenda of Federal Regulations. The Regulatory Information Service Center publishes the Unified Agenda in April and October of each year. You may use the RIN contained in the heading at the beginning of this document to find this action in the Unified Agenda.

Comments

How do I Prepare and Submit Comments?

Your comments must be written and in English. To ensure that your comments are correctly filed in the Docket, please include the docket number of this document in your comments.

Your comments must not be more than 15 pages long. (49 CFR 553.21). We established this limit to encourage you to write your primary comments in a concise fashion. However, you may attach necessary additional documents to your comments. There is no limit on the length of the attachments.

Please submit two copies of your comments, including the attachments, to Docket Management at the address given above under **ADDRESSES.**

How Can I Be Sure That My Comments Were Received?

If you wish Docket Management to notify you upon its receipt of your comments, enclose a self-addressed, stamped postcard in the envelope containing your comments. Upon receiving your comments, Docket Management will return the postcard by mail.

How do I Submit Confidential Business Information?

If you wish to submit any information under a claim of confidentiality, you should submit three copies of your complete submission, including the information you claim to be confidential business information, to the Chief Counsel, NHTSA, at the address given above under **FOR FURTHER INFORMATION CONTACT.** In addition, you should submit two copies, from which you have deleted the claimed confidential business information, to Docket Management at the address given above under **ADDRESSES.** When you send a comment containing information claimed to be confidential business information, you should include a cover letter setting forth the information specified in our confidential business information regulation. (49 CFR Part 512.)

Will the Agency Consider Late Comments?

We will consider all comments that Docket Management receives before the close of business on the comment closing date indicated above under **DATES.** To the extent possible, we will also consider comments that Docket Management receives after that date. If Docket Management receives a comment too late for us to consider it in developing a final rule (assuming that one is issued), we will consider that comment as an informal suggestion for future rulemaking action.

How Can I Read the Comments Submitted by Other People?

You may read the comments received by Docket Management at the address given above under **ADDRESSES.** The hours of the Docket are indicated above in the same location.

You may also see the comments on the Internet. To read the comments on the Internet, take the following steps:

1. Go to the Docket Management System (DMS) Web page of the Department of Transportation (*http://dms.dot.gov/*).
2. On that page, click on ''search.''
3. On the next page (http://dms.dot.gov/search/), type in the four-digit docket number shown at the beginning of this document. Example: If the docket number were ''NHTSA–1998–1234,'' you would type ''1234.'' After typing the docket number, click on ''search.''
4. On the next page, which contains docket summary information for the docket you selected, click on the desired comments. You may download the comments. However, since the comments are imaged documents, instead of word processing documents, the downloaded comments are not word searchable.

Please note that even after the comment closing date, we will continue to file relevant information in the Docket as it becomes available. Further, some people may submit late comments. Accordingly, we recommend that you periodically check the Docket for new material.

List of Subjects in 49 CFR Part 571

Imports, Motor vehicle safety, Motor vehicles, Rubber and rubber products, Tires.

In consideration of the foregoing, it is proposed that the Federal Motor Vehicle Safety Standards (49 CFR Part 571), be amended as set forth below.

PART 571—FEDERAL MOTOR VEHICLE SAFETY STANDARDS

1. The authority citation for part 571 would continue to read as follows:

Authority: 49 U.S.C. 322, 30111, 30115, 30117, and 30166; delegation of authority at 49 CFR 1.50.

§ 571.217 [Amended]

2. Section 571.217 would be amended by adding in S4, in alphabetical order, the definitions of ''wheelchair'', ''wheelchair securement anchorage'', and ''wheelchair securement device'' , by revising S5.4.2.1(a)(1) and by adding S5.4.3 to read as follows:

§ 571.217 Standard No. 217; Bus emergency exits and window retention and release.

* * * * *

S4. * * *

Wheelchair means a wheeled seat frame for the support and conveyance of a physically disabled person, comprised of at least a frame, seat, and wheels.

Wheelchair securement anchorage means the provision for transferring wheelchair securement device loads to the vehicle structure.

Wheelchair securement device means a strap, webbing or other device used for securing a wheelchair to the school bus, including all necessary buckles and other fasteners.

* * * * *

S5.4.2.1 * * *

(a) * * *

(1) In the case of a rear emergency exit door, an opening large enough to permit unobstructed passage into the bus of a rectangular parallelepiped 1143 millimeters high, 610 millimeters wide, and 305 millimeters deep, keeping the 1143 millimeter dimension vertical, the 610 millimeters dimension parallel to

the opening, and the lower surface in contact with the floor of the bus at all times, until the rear most surface of the parallelepiped is tangent to the plane of the door; and

* * * * *

S5.4.3 No portion of a wheelchair securement anchorage shall be located in a schoolbus such that:

(1) In the case of side emergency exit doors, any portion of the wheelchair securement anchorage is within the area bounded by 435 mm (17 inches) forward and rearward of the center of the side emergency exit door aisle, as shown in Figure 6A.

(2) In the case of rear emergency exit doors, any portion of the wheelchair securement anchorage is within the space bounded by a rectangular parallelepiped that is 1143 mm high, 610 mm wide, and 305 mm deep and that is placed anywhere in the door opening, keeping the 1143 mm dimension vertical, 610 mm dimension parallel to the opening, the lower surface in contact with the floor of the bus, and the rearmost surface tangent to the plane of the door opening, as shown in Figure 6B.

* * * * *

3. Section 571.217 would be amended by adding after Figure 5C, Figure 6A and Figure 6B, to read as follows:

BILLING CODE 4910–59–P

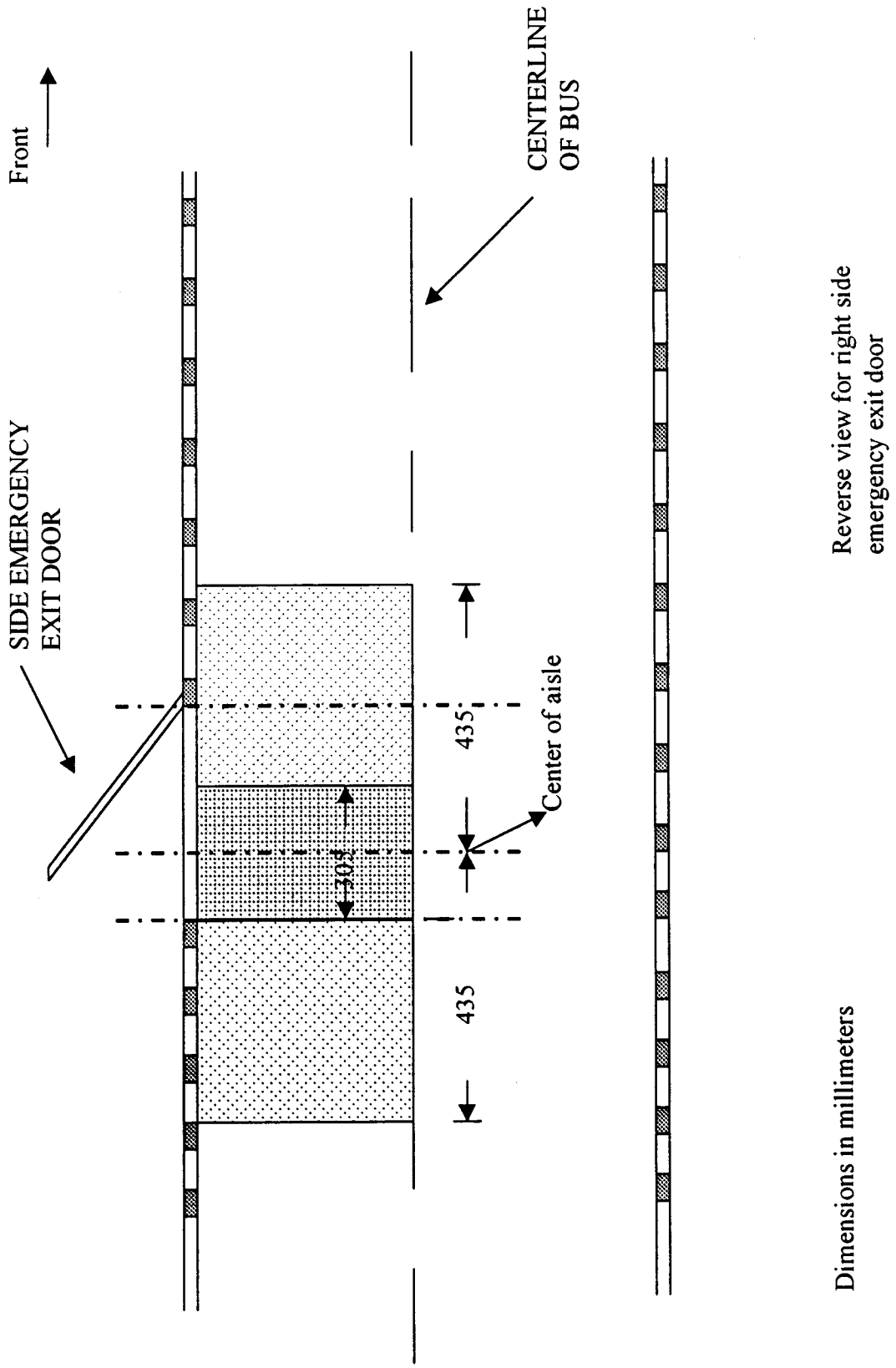

Reverse view for right side emergency exit door

Dimensions in millimeters

Figure 6A. Side Emergency Exit - No Wheelchair Anchorages within the shaded region

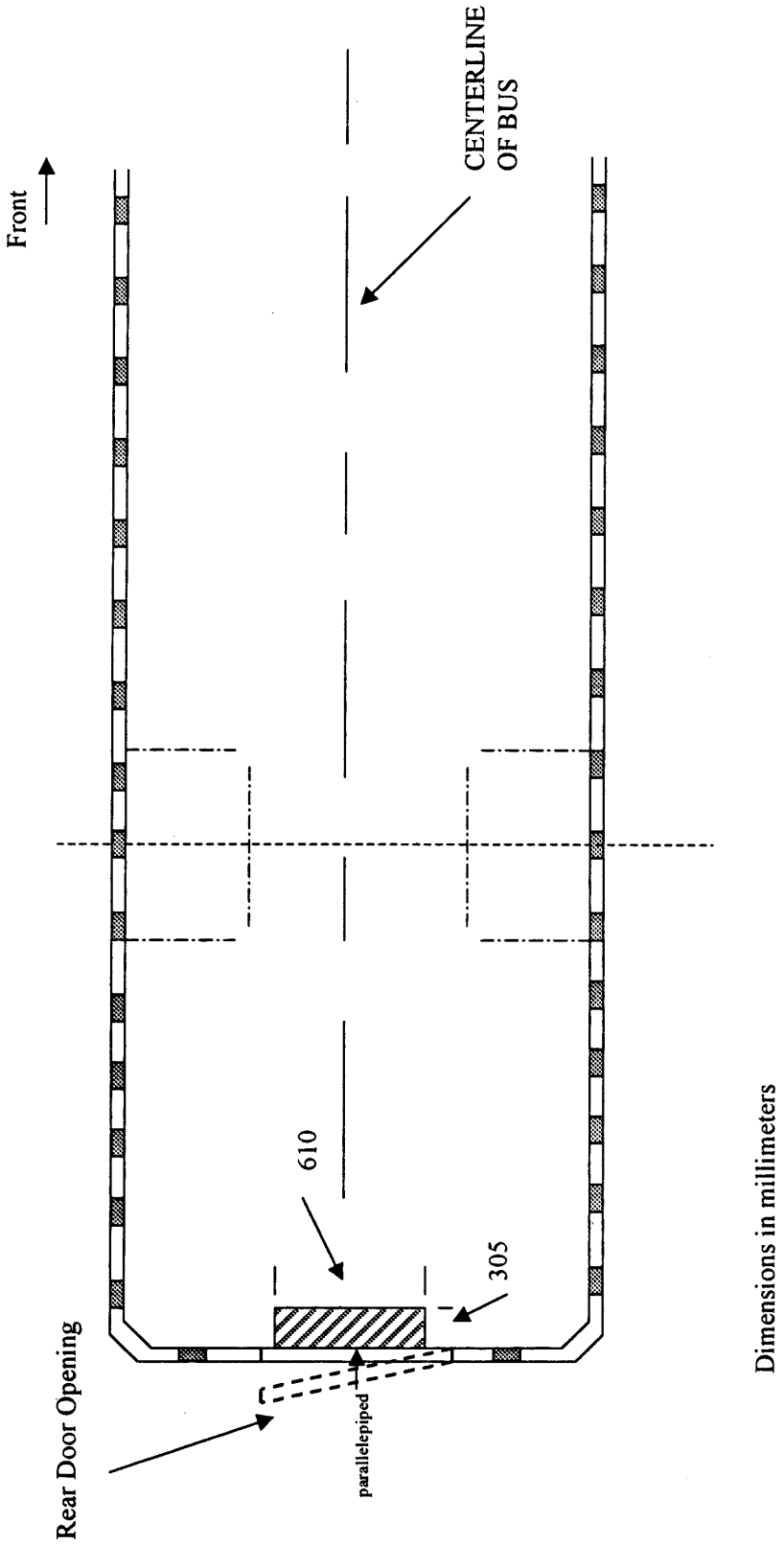

Figure 6B. Rear Door Emergency Exit - No Wheelchair Anchorages within the zone

Issued: March 2, 1999.

L. Robert Shelton,

Associate Administrator for Safety Performance Standards.

[FR Doc. 99–5510 Filed 3–4–99; 8:45 am]

BILLING CODE 4910–59–C

DEPARTMENT OF COMMERCE

National Oceanic and Atmospheric Administration

50 CFR Part 622

[I.D. 022599A]

RIN 0648–AL84

Fisheries of the Caribbean, Gulf of Mexico, and South Atlantic; Essential Fish Habitat (EFH) for Species in the South Atlantic; Comprehensive Amendment to the Fishery Management Plans of the South Atlantic Region

AGENCY: National Marine Fisheries Service (NMFS), National Oceanic and Atmospheric Administration (NOAA), Commerce.

ACTION: Notice of availability of a comprehensive amendment to fishery management plans for the South Atlantic Region; request for comments.

SUMMARY: NMFS announces that the South Atlantic Fishery Management Council (Council) has submitted a Comprehensive Amendment to the Fishery Management Plans (FMPs) of the South Atlantic (Comprehensive Amendment) for review, approval, and implementation by NMFS. This Comprehensive Amendment would identify and describe Essential Fish Habitat (EFH) and habitat areas of particular concern (HAPC) for species under management by the Council, and would establish management measures designed to protect and conserve EFH. The Council also prepared a Habitat Plan for the South Atlantic Region (Habitat Plan), which serves as a source document for describing EFH. Written comments are requested from the public.

DATES: Written comments must be received on or before May 4, 1999.

ADDRESSES: Comments must be mailed to the Southeast Regional Office, NMFS, 9721 Executive Center Drive N., St. Petersburg, FL 33702.

Requests for copies of the Habitat Plan and the Comprehensive Amendment, which includes a final Environmental Assessment/Supplemental Environmental Impact Statement, a Regulatory Impact Review, and a Social Impact Assessment/Fishery Impact Assessment, should be sent to the South Atlantic Fishery Management Council, One Southpark Circle, Suite 306, Charleston, SC 29407–4699; Phone: 843–571–4366; fax: 843–769–4520.

FOR FURTHER INFORMATION CONTACT: Michael C. Barnette, NMFS, 727-570-5305.

SUPPLEMENTARY INFORMATION: The Magnuson-Stevens Fishery Conservation and Management Act (Magnuson-Stevens Act), as amended by the Sustainable Fisheries Act, requires each Regional Fishery Management Council (Regional Council) to submit a FMP or amendment to NMFS for review and approval, disapproval, or partial approval. The Magnuson-Stevens Act also requires that NMFS, upon receiving an amendment, immediately publish a document in the **Federal Register** stating that the amendment is available for public review and comment.

Section 303 of the Magnuson-Stevens Act (16 U.S.C. 1801 *et seq.*), as amended, requires that the Regional Councils submit, by October 11, 1998, amendments to their FMPs that identify and describe EFH, including identification of adverse impacts from both fishing and non-fishing activities on EFH and identification of actions required to conserve and enhance EFH for managed species.

NMFS published guidelines to assist the Regional Councils in the description and identification of EFH in FMPs, including identification of adverse impacts from both fishing and non-fishing activities on EFH, and identification of actions required to conserve and enhance EFH (62 FR 66531, December 19, 1997). The NMFS guidelines encourage ecosystem approaches to protecting and conserving EFH. Identification of ecological roles (i.e., prey, competitors, trophic links within foodwebs, and nutrient transfer between ecosystems) should be incorporated into EFH recommendations. The guidelines also specify that sufficient EFH be protected and conserved to support sustainable fisheries and managed species' contribution to a healthy ecosystem.

The guidelines also encourage the identification of EFH that is judged to be particularly important to the long-term productivity of populations of one or more managed species or that is particularly vulnerable to degradation, as a HAPC. A HAPC may be identified based on the following criteria: (1) The importance of the ecological function provided by the habitat; (2) the extent to which the habitat is sensitive to human-induced environmental degradation; (3) whether and to what extent development activities are, or will be, stressing the habitat type; and (4) the rarity of the habitat type.

The Comprehensive Amendment, using the Habitat Plan as a source document, addresses EFH for all species or species assemblages that are managed in all seven of the Council's FMPs and identifies HAPCs for all managed species or species assemblages except golden crab. A summary of the Comprehensive Amendment follows:

1. EFH is identified and described based on areas important to each life stage of all managed species, including penaeid and rock shrimp (6 species); red drum; snapper-grouper complex (73 species); coastal migratory pelagics (6 species); golden crab; spiny lobster; and coral, coral reefs and live/hard bottom habitat (8 species complexes).

2. EFH is defined in the Magnuson-Stevens Act as ''those waters and substrates necessary to fish for spawning, breeding, feeding, or growth to maturity.'' Based on the ecological relationships of species and the relationships between species and their habitat, the Council has taken an ecosystem approach in identifying EFH for managed species and species assemblages. The general distribution and geographic limits of EFH are divided into estuarine inshore habitat and marine offshore habitat. EFH for the estuarine inshore component is subdivided to include estuarine emergent, estuarine shrub/scrub (mangroves), seagrass, oyster reef and shell banks, intertidal flats, palustrine emergent and forested, aquatic beds, and the estuarine water column. EFH for the marine offshore habitat is subdivided to include live/hard bottom habitat, coral and coral reefs, artificial/manmade reefs, sargassum, and the water column.

3. Threats to EFH from fishing and nonfishing activities are identified. Threats from non-fishing activities include agriculture; silviculture; urban development; commercial and industrial development; navigation and other hydrological alterations; recreational boating; mineral exploration, development, extraction, and transportation; ocean dumping; and natural events. Threats from fishing activities include physical alterations and damage to habitat from gear use and lost gear.

4. Options to conserve and enhance EFH are provided, and research needs are identified, primarily focusing on the development of a better understanding of the biological and physical processes associated with EFH and the impacts that alterations of EFH have on the fauna and flora of the EFH.

5. HAPCs are identified and defined for all managed species or species assemblages, except golden crab.

The Comprehensive Amendment contains Amendment 3 to the Shrimp FMP, Amendment 1 to the Red Drum FMP, Amendment 10 to the Coastal Migratory Pelagics FMP, Amendment 1 to the Golden Crab FMP, Amendment 5

to the Spiny Lobster FMP, and Amendment 4 to the Coral, Coral Reefs, and Live/Hard Bottom Habitat FMP.

Amendment 4 contains a proposed measure to expand the boundaries of the current Oculina Bank HAPC and to create two satellite Oculina Bank HAPCs. In accordance with the Magnuson-Stevens Act, NMFS is evaluating the proposed rule for this measure to determine whether it is consistent with the EFH Amendment, the Coral FMP, the Magnuson-Stevens Act, and other applicable law. If that determination is affirmative, NMFS will publish it in the **Federal Register** for public review and comment.

Comments received by May 4, 1999, whether specifically directed to the Comprehensive Amendment or to the proposed rule, will be considered by NMFS in its decision to approve, disapprove, or partially approve the Comprehensive Amendment. Comments received after that date will not be considered by NMFS in this decision. All comments received by NMFS on the Comprehensive Amendment or on the proposed rule during their respective comment periods will be summarized and addressed in the preamble of the final rule.

Authority: 16 U.S.C. 1801 *et seq.*

Dated: March 1, 1999.

Gary C. Matlock,

Director, Office of Sustainable Fisheries, National Marine Fisheries Service.

[FR Doc. 99–5499 Filed 3–4–99; 8:45 am]

BILLING CODE 3510–22–F

DEPARTMENT OF COMMERCE

National Oceanic and Atmospheric Administration

50 CFR Part 622

[Docket No. 981229328–8328–01; I.D. 120998C]

RIN 0648–AK31

Fisheries of the Caribbean, Gulf of Mexico, and South Atlantic; Reef Fish Fishery of the Gulf of Mexico; Amendment 16A

AGENCY: National Marine Fisheries Service (NMFS), National Oceanic and Atmospheric Administration (NOAA), Commerce.

ACTION: Proposed rule, request for comments.

SUMMARY: NMFS issues this proposed rule to implement Amendment 16A to the Fishery Management Plan for the Reef Fish Resources of the Gulf of Mexico (FMP). This proposed rule would prohibit the use of fish traps in the exclusive economic zone (EEZ) of the Gulf of Mexico south of 25°03' N. lat. after February 7, 2001; prohibit possession of reef fish exhibiting trap rash on board a vessel that does not have a valid fish trap endorsement; and require fish trap vessel owners or operators to provide trip initiation and trip termination reports and comply with an annual vessel/gear inspection requirement. In addition, Amendment 16A proposes that NMFS develop a system design, protocol, and implementation schedule for a fish trap vessel monitoring system (VMS). The intended effects of this rule are to enhance enforceability of fish trap measures and conserve and manage the reef fish resources of the Gulf of Mexico.

DATES: Written comments must be received on or before April 19, 1999.

ADDRESSES: Comments on the proposed rule or on the initial regulatory flexibility analysis (IRFA) must be sent to Robert Sadler, Southeast Regional Office, NMFS, 9721 Executive Center Drive N., St. Petersburg, FL 33702.

Comments regarding the collection-of-information requirements contained in this rule must be sent to Edward E. Burgess, Southeast Regional Office, NMFS, 9721 Executive Center Drive N., St. Petersburg, FL 33702, and to the Office of Information and Regulatory Affairs, Office of Management and Budget (OMB), Washington, DC 20503 (Attention: NOAA Desk Officer).

Requests for copies of Amendment 16A, which includes an environmental assessment, a regulatory impact review (RIR), and an IRFA, and requests for copies of a minority report submitted by two Council members should be sent to the Gulf of Mexico Fishery Management Council, Suite 1000, 3018 U.S. Highway 301 North, Tampa, FL, 33619; Phone: 813–228–2815; Fax: 813-225-7015.

FOR FURTHER INFORMATION CONTACT: Robert Sadler, 727–570–5305.

SUPPLEMENTARY INFORMATION: The reef fish fishery of the Gulf of Mexico is managed under the FMP. The FMP was prepared by the Gulf of Mexico Fishery Management Council (Council) and is implemented under the authority of the Magnuson-Stevens Fishery Conservation and Management Act (Magnuson-Stevens Act) by regulations at 50 CFR part 622.

Accelerated Area Phaseout of Fish Traps

A 10-year phaseout of the fish trap fishery ending February 7, 2007, was implemented under Amendment 14 (62 FR 13983, March 25, 1997). Amendment 16A proposes a shorter phaseout period (ending February 7, 2001) for an area in Federal waters south of Cape Sable, FL (25.05° N. lat.) at the southernmost point of the Florida peninsula. This measure is based on Council concerns about increased trap fishing pressure, continuing fish trap violations, and ineffective fish trap vessel monitoring. Opponents of fish traps report user group conflicts and problems with excessive trap fishing pressure in an area south of 25.05° N. lat. Law enforcement agencies reported continued difficulties in detecting and monitoring fish trap use and requested additional fish trap vessel monitoring, reporting, and inspection requirements for the entire fish trap fishery.

Testimony to the Council at its March 1998 meeting included allegations of continuing problems with fish trap gear in the Florida Keys area since implementation of the 10-year phaseout. Several commenters in favor of an accelerated fish trap phaseout stated that the continued use of the gear in the Gulf EEZ of the Florida Keys will contribute to bycatch problems, user group conflicts, and illegal trap use in adjacent state waters. Public testimony also indicated that deployment of fish traps in the Gulf EEZ adjacent to the Florida Keys during the 10-year period will continue to cause physical habitat damage to the coral reef community. Following public testimony, the Council proposed accelerating the phaseout, from 10 years to 4 years (ending February 7, 2001), in the Florida Keys. Fish trap use would be prohibited in the designated area after February 7, 2001.

In the area off the Florida Keys, the accelerated phaseout will negatively impact those fish trap fishermen who had anticipated a 10-year phaseout period and invested in fish trap gear or endorsements. It would also negatively impact fish trap fishermen in the Florida Keys by requiring them to travel to a point north of 25.05° N. lat. to deploy their traps. However, the Council anticipates that an accelerated fish trap phaseout may reduce fishing pressure on reef fish in the area south of 25.05° N. lat.

Proposed Restrictions on the Possession of Reef Fish

The Council is proposing to prohibit the possession of reef fish exhibiting the condition of trap rash (i.e., physical damage to fish caused by the fish rubbing or scraping against, running into, butting, or biting the wire mesh used to construct wire fish traps) on vessels without valid fish trap endorsements. This trap rash management measure is based on information that some vessels that land

reef fish with trap rash do not have valid fish trap endorsements and continually deploy fish traps at sea in violation of the requirement that traps be returned to port at the end of each trip. Persons on these vessels do not possess fish traps on board longer than the time required to empty the traps before returning them to the water. As a result, law enforcement officials cannot prosecute these fishermen due to lack of evidence of illegal trap deployment. In response, the Council proposed to prohibit the possession of reef fish exhibiting the condition of trap rash on board any vessel, except for vessels possessing a valid fish trap endorsement, as this condition is prima facie evidence of illegal trap use. The Council rejected recommendations for reef fish trip limits on vessels fishing stone crab and spiny lobster traps, because the Council concluded that, by putting the burden on the fishermen to prove that they were legal fish trappers if they possessed reef fish with trap rash, the trap rash provision would be more enforceable than reef fish trip limits. NMFS fishery scientists conducting research at sea have detected the trap rash condition on reef fish remaining in illegally deployed fish traps. The severity of the trap rash condition increases with the time a fish spends in a wire trap. NMFS has reviewed this information and found no evidence that trap rash could result from a source other than fish trap use. As a result, illegal fish trap use is indicated by possession of reef fish with the trap rash condition aboard vessels without a fish trap endorsement.

Fish Trap Vessel Monitoring System (VMS)

The Council considered an electronic VMS for fish trap vessels as a means to monitor regulated fish trap vessels and detect unlawful fish trapping activity. NMFS currently is evaluating a device that uses cellular telephone technology and, in addition to reporting vessel location, can be configured to sense various operational aspects of vessels in a fishery such as engine speed and operation of fishing gear (e.g., winches).

The VMS costs are estimated in Amendment 16A to be relatively small (approximately $1,000 for equipment, plus $500 installation cost per vessel) in comparison to the costs of fish trap operations, including acquiring a fish trap endorsement. Most fish trappers who commented on this measure to the Council supported establishing a VMS and accepting the associated VMS costs, if necessary, to allow themselves to continue trap fishing through February 7, 2007 (the time period established under Amendment 14 to the FMP).

The Council was unwilling to proceed with requiring VMS for fish trap vessels without knowledge of the detailed cost of the system or confirmation by NMFS that the system is viable. The Council has asked NMFS to complete its evaluation of VMS system purchase/installation costs and to test systems on fish trap vessels. Once this evaluation is complete, NMFS will present the system design, costs, and implementation schedule to the Council for its approval prior to implementation. If the Council approves the VMS at that time, NMFS will take the necessary steps to implement this action, if it is deemed appropriate.

Additional Fish Trap Vessel Inspection and Reporting Requirements

Amendment 16A proposes a 1-month fish trap/vessel inspection period and a requirement for fish trappers to report trip initiation and trip termination times. The inspections will establish a baseline to assure that all fish trap gear is in compliance with fish trap construction and tagging requirements and that all participants are familiar with the Federal regulations governing their fishery.

The proposed rule specifies that each fish trap vessel owner or operator will contact NMFS by telephone to schedule the inspection during an assigned 1-month period. On the inspection date, the owner or operator must make all fish trap gear with attached trap tags and buoys and all applicable permits available for inspection at a land-based site. Vessels must also be made available for inspection. Vessels may continue to use fish traps during the 1-month period until the inspection is initiated. An owner or operator may resume fishing upon completion of the inspection and a determination that all fish trap gear, permits, and vessels are in compliance. However, an owner or operator who fails to comply with the inspection requirements may not use or possess fish traps in the Gulf EEZ until the required inspection or reinspection has been completed and all fish trap gear, permits, and vessels are determined to be in compliance. (See Changes Proposed by NMFS.)

The proposed rule also requires trip initiation and termination reports submitted by telephone, through the use of a 24–hour toll-free number for each fishing trip on which a fish trap will be used or possessed.

Council Minority Report on Amendment 16A

A minority report signed by two Council members opposes Amendment 16A and specifically raises concerns on the accelerated phase out of fish traps off the Florida Keys. The minority report contends that Amendment 16A is inconsistent with several Magnuson-Stevens Act national standards. Copies of the minority report may be obtained from the Council (see **ADDRESSES**).

Availability of and Comments on Amendment 16A

Additional background and rationale for the measures discussed above are contained in Amendment 16A, the availability of which was announced in the **Federal Register** on December 18, 1998 (63 FR 70093). Written comments on Amendment 16A were solicited and must have been received by February 16, 1999, to be considered in the approval/disapproval decision on Amendment 16A. Comments received after that date will not be considered in the approval/disapproval decision. All comments received on Amendment 16A or on this proposed rule during their respective comment periods will be addressed in the preamble to the final rule.

Changes Proposed by NMFS

To improve compliance in the fishery, the Council proposed a 1-month period for vessel inspections and user group education preceding implementation of the trip initiation and termination reporting requirements contained in Amendment 16A. The Council's objective is to establish a baseline for ensuring that all fish trap gear used in the Gulf of Mexico is in compliance with fish trap regulations. To achieve that objective, NMFS is proposing to implement the vessel inspection and user group education concept. However, NMFS finds that the need to monitor compliance in the fishery will continue and, therefore, proposes to continue the inspection and education period on an annual basis. Because NMFS proposes that the inspections occur annually, delaying implementation of the new reporting requirement is impractical. As a result, NMFS also proposes to implement the trip initiation and trip termination reporting requirement upon effectiveness of the final rule.

Pursuant to section 311 of the Magnuson-Stevens Act, NMFS-authorized officers possess the authority to inspect any vessel subject to the Magnuson-Stevens Act without notice, at any time. However, for consistency with the Council's proposal in

Amendment 16A, NMFS is proposing in this rule to provide advance notice for the proposed annual inspections. Notice of annual inspections conducted under this measure would be through the use of appointments, as contemplated in Amendment 16A's initial inspection.

The amendment states that the Regional Administrator, Southeast Region, NMFS (RA) will publish notification of the 1-month fish trap inspection period in the **Federal Register**. NMFS proposes, in lieu of that requirement, that the RA provide written notification to each owner of a vessel that has a valid fish trap endorsement. NMFS believes that direct notification of owners would be more effective.

NMFS solicits public comment on these proposed changes.

Classification

At this time, NMFS has not determined that the amendment that this rule would implement is consistent with the national standards of the Magnuson-Stevens Act and other applicable laws. NMFS, in making that determination, will take into account the data, views, and comments received during the comment period on Amendment 16A.

This proposed rule has been determined to be not significant for purposes of E.O. 12866.

The Council prepared an IRFA, based on the RIR, that concludes that Amendment 16A and this proposed rule, if adopted, would have significant economic impacts on a substantial number of small entities. A summary of the IRFA follows.

The rule is proposed to address fish trap fishing violations in south Florida and to provide more effective monitoring and reporting for all fish trapping operations. The Magnuson-Stevens Act provides the legal basis for the rule, and no duplicative, overlapping, or conflicting Federal rules were identified.

It was determined that 86 commercial fish trapping businesses and an undetermined number of spiny lobster and stone crab fishermen, all of which qualify as small business entities, would be affected by the rule. Of the 86 fish trapping businesses, 12 have home ports in the Keys and can expect a greater than 5–percent decrease in revenues if it becomes illegal to use fish traps in the specified south Florida area in 2 years. The action that would limit possession of Gulf reef fish exhibiting trap rash to those vessels with a fish trap endorsement is expected to reduce revenues of some stone crab and spiny lobster fishermen. All the revenue losses are characterized as long-term with no offsetting benefits to the small businesses identified. All 86 vessels would incur additional compliance costs (annualized capital, operating and reporting costs).

Assuming that a VMS system is imposed in 1999 through a subsequent rulemaking, the 86 firms would incur a capital cost for installation estimated at $1500 per vessel plus undetermined annual costs of maintenance and cellular phone reporting of VMS data. The 86 firms would incur costs of reporting before and after each trip before a VMS system was put into effect and would also incur costs associated with having all gear inspected. The IRFA made no determination regarding the number of small business entities that could be forced to cease business operations if the proposals go into effect.

Alternatives are identified for the four proposed actions. In all cases, the status quo provides the least adverse impact on small entities, but the status quo was rejected as being incapable of addressing the issue of fish trap violations. The other rejected alternative to a 2-year phaseout of trapping in south Florida was a 2-year phaseout of all fish trapping; it would have a much greater negative impact. The VMS preferred alternative was for a design study of a VMS system to be followed by implementation under a separate rulemaking. One alternative recommended implementing the VMS system directly. This alternative was rejected because of the implied costs and the need for the design to be completed.

The proposed action regarding trip limits for vessels with reef fish permits that are fishing spiny lobster and stone crab maintains the status quo of no trip limits for possession of reef fish, but it requires vessels to have a fish trap endorsement if there are fish exhibiting trap rash on board. Other trip limit alternatives would institute various trip limits. However, they were rejected because the Council concluded that the trap rash provision would resolve enforcement problems better by putting the burden on the fishermen to prove that they were legal fish trappers if they possessed fish with trap rash.

For the action recommending additional reporting requirements, there were two alternatives that were both rejected on the basis of creating greater negative impacts than the preferred alternative without an offsetting improvement in the reporting process. The status quo was rejected because of the need to manage the fishery better through improved information gathering.

A copy of the IRFA is available from the Council (see **ADDRESSES**).

Notwithstanding any other provision of law, no person is required to respond to, nor shall a person be subject to, a penalty for failure to comply with a collection of information subject to the requirements of the Paperwork Reduction Act (PRA) unless that collection of information displays a currently valid OMB control number.

This rule contains two new collection-of-information requirements subject to the PRA—namely, a requirement for fish trap vessel operators to provide, via toll-free telephone calls, trip initiation and trip termination reports and an annual requirement for fish trap owners/operators to schedule, via telephone call, an appointment with NMFS enforcement to allow inspection of fish trap gear, fish trap permits and tags, and vessels. These collection-of-information requirements have been submitted to OMB for approval. The public reporting burdens for the telephone calls for the trip initiation and termination reports, and for scheduling the fish trap inspection are estimated at 5 minutes each per response, including the time for reviewing instructions, searching existing data sources, gathering and maintaining the data needed, and completing and reviewing the collections of information.

Public comment is sought regarding: Whether these proposed collections of information are necessary for the proper performance of the functions of the agency, including whether the information will have practical utility; the accuracy of the burden estimates; ways to enhance the quality, utility, and clarity of the information to be collected; and ways to minimize the burden of the collections of information, including through the use of automated collection techniques or other forms of information technology. Send comments on these, or any other aspects of the collections of information, to NMFS and OMB (see **ADDRESSES**).

List of Subjects in 50 CFR Part 622

Fisheries, Fishing, Puerto Rico, Reporting and recordkeeping requirements, Virgin Islands.

Dated: March 1, 1999.

Andrew A. Rosenberg, Ph.D.,

Deputy Assistant Administrator for Fisheries, National Marine Fisheries Service.

For the reasons set out in the preamble, 50 CFR part 622 is proposed to be amended as follows:

PART 622—FISHERIES OF THE CARIBBEAN, GULF, AND SOUTH ATLANTIC

1. The authority citation for part 622 continues to read as follows:

Authority: 16 U.S.C. 1801 *et seq.*

2. In § 622.5, paragraph (a)(1)(ii)(B) is added and reserved, and paragraph (a)(1)(ii)(A) is added to read as follows:

§ 622.5 Recordkeeping and reporting.

* * * * *

(a) * * *

(1) * * *

(ii) * * *

(A) *Fish traps*. In addition to the other reporting requirements in paragraph (a)(1)(ii) of this section, the owner or operator of a vessel for which a fish trap endorsement has been issued, as required under § 622.4(a)(2)(i), must comply with the following requirements.

(*1*) *Annual inspection*. Each year, the RD will establish a 1-month period for mandatory inspection of all fish trap gear, permits, and vessels. The RD will provide written notification of the inspection period to each owner of a vessel for which a fish trap endorsement has been issued as required under § 622.4(a)(2)(i). Each such owner or operator must contact the Special Agent-in-Charge, NMFS, Office of Enforcement, Southeast Region, St. Petersburg, FL (SAC) or his designee by telephone (727–570–5344) to schedule an inspection during the 1-month period. Requests for inspection must be made between 8:00 a.m. and 4:30 p.m. Monday through Friday and must be made at least 72 hours in advance of the desired inspection date. Inspections will be conducted Monday through Friday between 8:00 a.m. and 4:30 p.m. only. On the inspection date, the owner or operator must make all fish trap gear with attached trap tags and buoys and all applicable permits available for inspection on land. Vessels must also be made available for inspection as directed by the SAC or his designee. Upon completion of the inspection and a determination that all fish trap gear, permits, and vessels are in compliance, an owner or operator may resume fishing with the lawful gear. However, an owner or operator who fails to comply with the inspection requirements during the 1-month inspection period or during any other random inspection may not use or possess a fish trap in the Gulf EEZ until the required inspection or reinspection, as directed by the SAC, has been completed and all fish trap gear, permits, and vessels are determined to be in compliance with all applicable regulations.

(*2*) *Trip reports*. For each fishing trip on which a fish trap will be used or possessed, an owner or operator of a vessel for which a fish trap endorsement has been issued, as required under § 622.4(a)(2)(i), must submit a trip initiation report and a trip termination report to the SAC or his designee, by telephone, using a 24–hour toll-free number that will be provided in the final rule.

(*i*) *Trip initiation report*. The trip initiation report must be submitted before beginning the trip and must include: vessel name; official number; number of traps to be deployed; sequence of trap tag numbers; date, time, and point of departure; and intended time and date of trip termination.

(*ii*) *Trip termination report*. The trip termination report must be submitted immediately upon returning to port and prior to any offloading of catch or fish traps. The trip termination report must include: vessel name; official number; name and address of dealer where catch will be offloaded and sold; the time offloading will begin; notification of any lost traps; and notification of any traps left deployed for any reason.

(B) [Reserved]

* * * * *

3. In § 622.7, paragraph (d) is revised to read as follows:

§ 622.7 Prohibitions.

* * * * *

(d) Falsify or fail to maintain, submit, or provide information or fail to comply with inspection requirements or restrictions, as specified in § 622.5(a) through (f).

* * * * *

4. In § 622.31, paragraph (c)(2) is revised to read as follows:

§ 622.31 Prohibited gear and methods.

* * * * *

(c) * * *

(2) In the Gulf EEZ, a fish trap—

(i) May not be used or possessed west of 85°30' W. long.;

(ii) May not be used, but may be possessed on board a vessel with a valid fish trap endorsement for the sole purpose of transit, after February 7, 2001, south of 25°03' N. lat.; and

(iii) May not be used or possessed after February 7, 2007.

* * * * *

5. In § 622.41, paragraph (i) is added to read as follows:

§ 622.41 Species specific limitations.

* * * * *

(i) *Gulf reef fish exhibiting trap rash*. Gulf reef fish in or from the Gulf EEZ that exhibit trap rash may be possessed on board a vessel only if that vessel has a valid fish trap endorsement, as required under § 622.4(a)(2)(i), on board. Possession of such fish on board a vessel without a valid fish trap endorsement is prima facie evidence of illegal trap use and is prohibited. For the purpose of this paragraph, trap rash is defined as physical damage to fish that characteristically results from contact with wire fish traps. Such damage includes, but is not limited to, broken fin spines, fin rays, or teeth; visually obvious loss of scales; and cuts or abrasions on the body of the fish, particularly on the head, snout, or mouth.

[FR Doc. 99–5498 Filed 3–4–99; 8:45 am]

BILLING CODE 3510–22–F

Notices

Federal Register
Vol. 64, No. 43
Friday, March 5, 1999

This section of the FEDERAL REGISTER contains documents other than rules or proposed rules that are applicable to the public. Notices of hearings and investigations, committee meetings, agency decisions and rulings, delegations of authority, filing of petitions and applications and agency statements of organization and functions are examples of documents appearing in this section.

DEPARTMENT OF AGRICULTURE

Submission for OMB Review; Comment Request

March 2, 1999.

The Department of Agriculture has submitted the following information collection requirement(s) to OMB for review and clearance under the Paperwork Reduction Act of 1995, Public Law 104–13. Comments regarding (a) whether the collection of information is necessary for the proper performance of the functions of the agency, including whether the information will have practical utility; (b) the accuracy of the agency's estimate of burden including the validity of the methodology and assumptions used; (c) ways to enhance the quality, utility and clarity of the information to be collected; (d) ways to minimize the burden of the collection of information on those who are to respond, including through the use of appropriate automated, electronic, mechanical, or other technological collection techniques or other forms of information technology should be addressed to: Desk Officer for Agriculture, Office of Information and Regulatory Affairs, Office of Management and Budget (OMB), Washington, D.C. 20502 *and* to Departmental clearance Office, USDA, OCIO, Mail Stop 7602, Washington, D.C. 20250–7602. Comments regarding these information collections are best assured of having their full effect if received within 30 days of this notification. Copies of the submission(s) may be obtained by calling (202) 720–6746.

An agency may not conduct or sponsor a collection of information unless the collection of information displays a currently valid OMB control number and the agency informs potential persons who are to respond to the collection of information that such persons are not required to respond to the collection of information unless it displays a currently valid OMB control number.

Economic Research Service

Title: Food Security Supplement to the Current Population Survey.

OMB Control Number: 0536–0043.

Summary of Collection: The Food Security Supplement is sponsored by the Economic Research Service (ERS) as a research and evaluation activity authorized under Section 17 of the Food Stamp Act of 1977. ERS is collaborating with the Food and Nutrition Service (FNS) and the Bureau of Census to continue this program of research and development. The Food Stamp Program (FSP) is currently the primary source of nutrition assistance for low-income Americans enabling households to improve their diet by increasing their food purchasing power. As the nation's primary public program for ensuring food security and alleviating hunger, USDA needs to regularly monitor these conditions among its target population. The Food Security Supplement will be administered as a set of questions appended to the ongoing Current Population Survey (CPS) managed by the Bureau of Census. The information collected associated with this request is in support of the April 1999 CPS.

Need and Use of the Information: ERS will collect information from the Current Population Survey Food Security Supplement to routinely obtain reliable data from a large, representative national sample in order to develop a measure that can be used to track the prevalence of food insecurity and hunger within the U.S. population, as a whole, and by important population subgroups. The data collection will partially fulfill the requirements of the Congressionally mandated 10-Year Plan for the National Nutrition Monitoring and Related Research Program (NNMRRP). It will also contribute to provisions of the Government Performance Review Act (GPRA) by allowing FNS to quantify the effects and accomplishments of the Food Stamp Program.

Description of Respondents: Individuals or households.

Number of Respondents: 50,000.

Frequency of Responses: Reporting: On occasion.

Total Burden Hours: 6,882.

Forest Service

Title: ''Your Comments'' Customer Service Comment Card.

OMB Control Number: 0596—New.

Summary of Collection: Executive Order 12862, issued September 11, 1993, directed Federal agencies to change the way they do business, to reform their management practices, to provide service to the public that matches or exceeds the best service available in the private sector, and to establish and implement customer service standards to carry out the principles of the National Performance Review. In response to this order, the Forest Service (FS) established and implemented customer service standards and posted these standards in all FS offices, work sites and visitor centers. ''Your Comments'' Customer Service Comment Cards are voluntary customer surveys, which will be used to monitor customer perceptions of how well the FS meets its posted customer service standards, as well as how FS customers view the agency's business practices, operations, and facilities. FS will collect information in person, by mail and on the Internet, using the Customer Service Survey Cards.

Need and Use of the Information: FS will collect information on whether customers received prompt courteous service; were the information or service requested provided; were procedures clear and efficient; and how satisfied were they with the facilities used. The information from the survey will provide FS with a means to learn about and address customer complaints.

Descriptionof Respondents: Individual or households; Business or other for-profit; Not for-profit institutions; Federal Government; State, Local, or Tribal Government.

Number of Respondents: 20,500.

Frequency of Responses: Reporting: On occasion.

Total Burden Hours: 1,708.

Nancy B. Sternberg,

Departmental Clearance Officer.

[FR Doc. 99–5473 Filed 3–4–99; 8:45 am]

BILLING CODE 3410–01–M

DEPARTMENT OF AGRICULTURE

Forest Service

Environmental Impact Statement Preparation for the Brush Creek Project, Allegheny National Forest, Forest and Elk Counties, Pennsylvania

AGENCY: Forest Service, USDA.

ACTION: Notice of intent to prepare an environmental impact statement.

SUMMARY: In accordance with the National Environmental Policy Act, notice is hereby given that the Forest Service, Allegheny National Forest will prepare an Environmental Impact Statement to disclose the environmental consequences of the proposed Brush Creek Project.

The Allegheny National Forest is divided into Management Areas, which are used to guide the type and intensity of management. The majority of the Brush Creek Project Area falls into Management Area 3.0, with smaller portions falling into Management Areas 1.0 and 6.1. The Allegheny National Forest Land and Resource Management Plan (Forest Plan) gives the direction for forest management activities. The following management direction was excerpted from the Forest Plan for each of the three Management Areas included within the project area.

Management Area 1.0—Emphasize habitat management for ruffed grouse and other wildlife species associated with early successional stages of forest habitat.—Provide for high quality wood fiber production.—Provide a roaded natural setting for all types of dispersed recreation opportunities.

Management Area 3.0—Provide a sustained yield of high quality sawtimber through even-aged management—Provide a variety of age or size class habitat diversity in a variety of timber types.—Emphasize deer and turkey in all timber types and squirrel in the oak type.—Provide a roaded natural setting for all types of developed and dispersed recreation opportunities, with an emphasis on motorized recreation activities.

Management Area 6.1—Maintain or enhance scenic quality.—Emphasize a variety of dispersed recreation activities in a semi-primitive motorized setting.—Emphasize wildlife species which require mature or overmature hardwood forests.

The purpose of this project is to move from the Existing Condition towards the Desired Future Condition (DFC) as detailed in the Forest Plan. In order to move towards the DFC, the early successional age class (0–20 year age) needs to increase; healthy forested stands capable of producing high quality, high value sawtimber need to be maintained; and understories dominated by fern, grass or undesirable woody vegetation need to develop seedling vegetation. Project proposals include timber harvesting as a means for making desired changes to forest vegetation and satisfying the demonstrated public need for wood products. Our proposed action to meet the purpose and need includes 690 acres of regeneration harvests to bring the onset of a new forest; herbicide, fertilizer, fencing, mechanical site preparation, and planting to ensure seedling establishment and growth in understories; 356 acres of thinning in immature stands to reduce the competition for light and nutrients, thereby improving the health and vigor of residual trees; and 52 acres or hardwood release cutting designed to reduce competition for selected trees on recent clearcuts. Activities relating to roads in support of these silvicultural operations include approximately 7 miles of new road construction, 2 miles of betterment, 13 miles of road restoration, 3 miles of road obliteration, and 1 mile of road realignment. Additionally, 1 new stone pit would be developed. This new stone pit, along with 8 existing pits, would be utilized as sources of surfacing stone for the transportation system. Wildlife habitat improvement measures consisting of plantings, prescribed burning, fruit tree pruning and maintenance, and bird nesting box placement serve to supplement the existing conditions.

After completion of the Brush Creek Environmental Impact Statement, the responsible official will review the several alternatives analyzed, and select the one that maximizes net public benefits for the Brush Creek Project Area.

DATES: The public is asked to provide comments, suggestions, and recommendations for achieving the purpose and need for the Brush Creek Project. The public comment period will be for 30 days from the date the Environmental Protection Agency publishes this notice of availability in the **Federal Register.** Comments and suggestions should be submitted in writing and postmarked by April 12, 1999 to ensure timely consideration. To assist in commenting, a scoping letter providing more detailed information on the project proposal has been prepared and is available to interested parties.

FOR FURTHER INFORMATION CONTACT: Submit written comments and suggestions concerning the proposed action to: ''Brush Creek Project,'' attention Ronald Neff—ID Team Leader, Marienville Ranger District, HC2 Box 130, Marienville, PA 16239. For further information, contact Ronald Neff (814) 927–6628.

SUPPLEMENTARY INFORMATION: The issue of uneven-aged management often arises during the scoping process for projects such as this. We will therefore include at least one alternative to the Proposed Action which will evaluate the effects of applying uneven-aged management techniques. Issues, which are generated through the scoping process, may generate additional alternatives.

Comments considered beyond the scope of this project and which will not be evaluated include whether or not commercial timber harvest should occur on National Forest System lands; the validity of the science of silviculture and forest management; and whether or not to allow the use of herbicides on the Allegheny National Forest on a programmatic level.

Comments received in response to this solicitation, including names and addresses of those who comment, will be considered part of the public record on this proposed action and will be available for public inspection. In a recent legal opinion, the Forest Service's Office of General Council (OGC) has determined that names and addresses of people who respond to a Forest Service solicitation are not protected by the Privacy Act and can be released to the public. The Forest Service routinely gives notice of and requests comments on proposed land and resource management actions accompanied by environmental documents, as well as on proposed rules and policies. Comments received in response to such solicitations, including names and addresses of those who comment, will be considered part of the public record and will be available for such inspection, upon request. Any person may request the agency to withhold a submission from the public record by showing how the Freedom of Information Act (FOIA) permits such confidentiality. The opinion states that such confidentiality may be granted in only very limited circumstances, such as to protect trade secrets.

The Draft EIS is expected to be filed with the Environmental Protection Agency and be available for public review during June of 1999. At that time, the Environmental Protection Agency (EPA) will publish in the **Federal Register** a notice of availability of the draft environmental impact statement. The comment period on the draft will be 45 days from the date the

EPA notice appears in the **Federal Register**.

The Forest Service believes it is important to give reviewers notice at this early stage of several court rulings related to public participation in the environmental review process. First, reviewers of draft environmental impact statements must structure their participation in the environmental review of the proposals so that it is meaningful and alerts an agency to the reviewers position and contentions, Vermont Yankee Nuclear Power Corp. v. NRDC, 435 U.S. 519, 553 (1978). Also, environmental objections that could be raised at the draft environmental impact statement stage may be waived if not raised until after completion of the final environmental impact statement, City of Angoon v. Hodel, 803 F.2d 1016, 1022 (9th Cir. 1988), and Wisconsin Heritages, Inc. v. Harris, 490 F. supp. 1334, 1338 (E. D. Wis. 1980). Because of these court rulings, it is very important that those interested in this proposed action participate by the close of the 45-day comment period so that substantive comments and objections are made available to the Forest Service at a time when it can meaningfully consider them and respond to them in the final environmental impact statement.

Comments on the draft environmental impact statement should be as specific as possible. It is also helpful if comments refer to specific pages or chapters of the draft statement. Comments may also address the adequacy of the draft environmental impact statement or the merits of the alternatives formulated and discussed in the statement (Reviewers may wish to refer to CEQ Regulations for implementing the procedural provisions of the National Environmental Policy Act at 40 CFR 1503.3 in addressing these points). After the comment period ends on the draft environmental impact statement, the comments received will be analyzed and considered by the Forest Service in preparing the final environmental impact statement.

The final environmental impact statement is scheduled to be completed in October, 1999. In the final EIS, the Forest Service is required to respond to the comments received (40 CFR 1503.4). The responsible official will consider the comments, responses, environmental consequences discussed in the environmental impact statement, and applicable laws, regulations and policies in making a decision regarding this proposal. The responsible official will document the decision and reasons for the decision in a Record of Decision. That decision will be subject to appeal under 36 CFR part 215.

The responsible official is Leon Blashock, District Ranger, Allegheny National Forest, HC2 Box 130, Marienville, PA 16239.

Dated: February 26, 1999.

Leon Blashock,

District Ranger.

[FR Doc. 99–5430 Filed 3–4–99; 8:45 am]

BILLING CODE 3410–11–M

DEPARTMENT OF AGRICULTURE

Forest Service

Klamath Provincial Advisory Committee (PAC)

AGENCY: Forest Service, USDA.

ACTION: Notice of Meeting.

SUMMARY: The Klamath Provincial Advisory Committee will meet on March 11–12, 1999, at the Clear Lake Room, Shilo Inn, 2500 Almond Street, Klamath Falls, Oregon. On Thursday, March 11, the PAC will meet from 9:00 A.M. to 5:30 P.M. On Friday, March 12, the meeting will start at 8:00 A.M. and adjourn at 1:00 P.M. On Thursday, the PAC meeting will adjourn to the Shasta Room, Oregon Institute of Technology, 3201 Campus Drive from 1:00 to 3:00 P.M. to discuss ''Using Science, Research, and Community to Restore the Klamath Basin.'' Other agenda items for the meeting include: (1) Pelican Butte Project; (2) Twelve PAC and Intergovernmental Agency Committee Proposed Meeting, November 1999; (3) Economic Impact of the Northwest Forest Plan on Two Small Communities in Oregon; (4) Subcommittee Reports; and (5) Public Comment Periods. All PAC meetings are open to the public. Interested citizens are encouraged to attend.

FOR FURTHER INFORMATION CONTACT: Connie Hendryx, USDA, Klamath National Forest, 1312 Fairlane Road, Yreka, California 96097; telephone 530–841–4468 (voice), TDD 530–841–4573.

Dated: March 1, 1999.

Jan Ford,

Klamath PAC Support Staff.

[FR Doc. 99–5455 Filed 3–4–99; 8:45 am]

BILLING CODE 3410–11–M

COMMITTEE FOR PURCHASE FROM PEOPLE WHO ARE BLIND OR SEVERELY DISABLED

Procurement List Additions and Deletions

AGENCY: Committee for Purchase From People Who Are Blind or Severely Disabled.

ACTION: Additions to and Deletions from the Procurement List.

SUMMARY: This action adds to the Procurement List a commodity and services to be furnished by nonprofit agencies employing persons who are blind or have other severe disabilities, and deletes from the Procurement List commodities and a service previously furnished by such agencies.

EFFECTIVE DATE: April 5, 1999.

ADDRESS: Committee for Purchase From People Who Are Blind or Severely Disabled, Crystal Gateway 3, Suite 310, 1215 Jefferson Davis Highway, Arlington, Virginia 22202–4302.

FOR FURTHER INFORMATION CONTACT: Beverly Milkman (703) 603–7740.

SUPPLEMENTARY INFORMATION: On September 18, 1998, January 15 and 22, 1999, the Committee for Purchase From People Who Are Blind or Severely Disabled published notices (63 FR 49896 and 64 FR 2623 and 3483) of proposed additions to and deletions from the Procurement List:

Additions

After consideration of the material presented to it concerning capability of qualified nonprofit agencies to provide the commodity and services and impact of the additions on the current or most recent contractors, the Committee has determined that the commodity and services listed below are suitable for procurement by the Federal Government under 41 U.S.C. 46–48c and 41 CFR 51–2.4.

I certify that the following action will not have a significant impact on a substantial number of small entities. The major factors considered for this certification were:

1. The action will not result in any additional reporting, recordkeeping or other compliance requirements for small entities other than the small organizations that will furnish the commodity and services to the Government.

2. The action will not have a severe economic impact on current contractors for the commodity and services.

3. The action will result in authorizing small entities to furnish the commodity and services to the Government.

4. There are no known regulatory alternatives which would accomplish the objectives of the Javits-Wagner-O'Day Act (41 U.S.C. 46—48c) in connection with the commodity and services proposed for addition to the Procurement List.

Accordingly, the following commodity and services are hereby added to the Procurement List:

Commodity

Firing Attachment, Blank
1005–01–361–8208

Services

Administrative/General Support Services

General Services Administration, Federal Supply Service (3FS), Burlington, New Jersey
Food Service Attendant, Eglin Air Force Base, Florida

This action does not affect current contracts awarded prior to the effective date of this addition or options that may be exercised under those contracts.

Deletions

I certify that the following action will not have a significant impact on a substantial number of small entities. The major factors considered for this certification were:

1. The action may not result in any additional reporting, recordkeeping or other compliance requirements for small entities.

2. The action will not have a severe economic impact on future contractors for the commodities and services.

3. The action may result in authorizing small entities to furnish the commodities and services to the Government.

4. There are no known regulatory alternatives which would accomplish the objectives of the Javits-Wagner-O'Day Act (41 U.S.C. 46–48c) in connection with the commodities and services deleted from the Procurement List.

After consideration of the relevant matter presented, the Committee has determined that the commodities and service listed below are no longer suitable for procurement by the Federal Government under 41 U.S.C. 46–48c and 41 CFR 51–2.4.

Accordingly, the following commodities and service are hereby deleted from the Procurement List:

Commodities

Box, Filing
7520–00–240–4831
7520–00–240–4839
Reel, Cable
8130–L9–015–3520
8130–L9–015–3420

Service

Janitorial/Grounds Maintenance, U.S. Department of Agriculture, Coshocton, Ohio

Beverly L. Milkman,

Executive Director.

[FR Doc. 99–5513 Filed 3–4–99; 8:45 am]

BILLING CODE 6353–01–P

COMMITTEE FOR PURCHASE FROM PEOPLE WHO ARE BLIND OR SEVERELY DISABLED

Procurement List; Proposed Additions and Deletions

AGENCY: Committee for Purchase From People Who Are Blind or Severely Disabled.

ACTION: Proposed additions to and deletions from Procurement List.

SUMMARY: The Committee has received proposals to add to the Procurement List commodities and services to be furnished by nonprofit agencies employing persons who are blind or have other severe disabilities, and to delete commodities previously furnished by such agencies.

COMMENTS MUST BE RECEIVED ON OR BEFORE: April 5, 1999.

ADDRESSES: Committee for Purchase From People Who Are Blind or Severely Disabled, Crystal Gateway 3, Suite 310, 1215 Jefferson Davis Highway, Arlington, Virginia 22202–4302.

FOR FURTHER INFORMATION CONTACT: Beverly Milkman (703) 603–7740.

SUPPLEMENTARY INFORMATION: This notice is published pursuant to 41 U.S.C. 47(a)(2) and 41 CFR 51–2.3. Its purpose is to provide interested persons an opportunity to submit comments on the possible impact of the proposed actions.

If the Committee approves the proposed additions, all entities of the Federal Government (except as otherwise indicated) will be required to procure the commodities and services listed below from nonprofit agencies employing persons who are blind or have other severe disabilities.

I certify that the following action will not have a significant impact on a substantial number of small entities. The major factors considered for this certification were:

1. The action will not result in any additional reporting, recordkeeping or other compliance requirements for small entities other than the small organizations that will furnish the commodities and services to the Government.

2. The action will result in authorizing small entities to furnish the commodities and services to the Government.

3. There are no known regulatory alternatives which would accomplish the objectives of the Javits-Wagner-O'Day Act (41 U.S.C. 46–48c) in connection with the commodities and services proposed for addition to the Procurement List. Comments on this certification are invited.

Commenters should identify the statement(s) underlying the certification on which they are providing additional information.

The following commodities and services have been proposed for addition to Procurement List for production by the nonprofit agencies listed:

Commodities

Line, Multi-Loop
1670–01–062–6307
1670–01–062–6311
NPA: Industrial Opportunities, Inc. Marble, North Carolina
Cushion, Seat Back
2540–00–737–3311
NPA: APEX, Inc., Anadarko, Oklahoma
Badge, Qualification
8455–01–113–0066
NPA: The Fontana Rehabilitation Workshop, Fontana, California

Services

Base Supply Center, Fort Riley, Kansas
NPA: Envision, Inc., Wichita, Kansas

Janitorial/Custodial

Child Development Centers
Buildings 6058 and 6060, Fort Carson, Colorado
NPA: Platte River Industries, Inc., Denver, Colorado
Johnstown USARC #1
295 Goucher Street, Johnstown, Pennsylvania
NPA: Goodwill Industries of the Connemaugh Valley, Johnstown, Pennsylvania

Deletions

I certify that the following action will not have a significant impact on a substantial number of small entities. The major factors considered for this certification were:

1. The action will not result in any additional reporting, recordkeeping or other compliance requirements for small entities.

2. The action will result in authorizing small entities to furnish the commodities to the Government.

3. There are no known regulatory alternatives which would accomplish the objectives of the Javits-Wagner-O'Day Act (41 U.S.C. 46–48c) in connection with the commodities proposed for deletion from the Procurement List.

The following commodities have been proposed for deletion from the Procurement List:

Cap, Utility, Camouflage

8405–01–246–4176
8405–01–246–4177
8405–01–246–4178
8405–01–246–4179
8405–01–246–4180
8405–01–246–6658

Cap, Hot Weather

8415–01–393–6291
8415–01–393–6292
8415–01–393–6293
8415–01–393–6294
8415–01–393–6295
8415–01–393–6296
8415–01–393–6297
8415–01–393–6298
8415–01–393–6299
8415–01–393–7813
8415–01–393–7820
8415–01–393–7952

Beverly L. Milkman,

Executive Director.

[FR Doc. 99–5514 Filed 3–4–99; 8:45 am]

BILLING CODE 6353–01–P

BROADCASTING BOARD OF GOVERNORS

Sunshine Act Meeting

DATES AND TIME: March 10, 1999; 8:00 a.m.

PLACE: Cohen Building, Room 3321, 330 Independence Ave., S.W., Washington, D.C. 20547.

CLOSED MEETING: The members of the Broadcasting Board of Governors (BBG) will meet in closed session to review and discuss a number of issues relating to U.S. Government-funded non-military international broadcasting. They will address internal procedural, budgetary, and personnel issues, as well as sensitive foreign policy issues relating to potential options in the U.S. international broadcasting field. This meeting is closed because if open it likely would either disclose matters that would be properly classified to be kept secret in the interest of foreign policy under the appropriate executive order (5 U.S.C. 552b.(c)(1)) or would disclose information the premature disclosure of which would be likely to significantly frustrate implementation of a proposed agency action. (5 U.S.C. 552b.(c)(9)(B)). In addition, part of the discussion will relate solely to the internal personnel and organizational issues of the BBG or the International Broadcasting Bureau. (5 U.S.C. 552b.(c)(2) and (6)).

CONTACT PERSON FOR MORE INFORMATION: Persons interested in obtaining more information should contact either Brenda Hardnett or John Lindburg at (202) 401–3736.

Dated: March 2, 1999.

John A. Lindburg,

Legal Counsel.

[FR Doc. 99–5534 Filed 3–2–99; 4:26 pm]

BILLING CODE 8230–01–M

DEPARTMENT OF COMMERCE

International Trade Administration

[A–588–823]

Professional Electric Cutting Tools From Japan: Postponement of Preliminary Results of Fifth Administrative Review of Antidumping Duty Order

AGENCY: Import Administration, International Trade Administration, United States Department of Commerce.

ACTION: Notice of extension of the time limit for the preliminary results in the fifth administrative review of the antidumping duty order on professional electric cutting tools from Japan.

SUMMARY: The United States Department of Commerce (''the Department'') is extending the time limit for the preliminary results of the fifth administrative review of the antidumping duty order on professional electric cutting tools (''PECTs'') from Japan. This review covers the period July 1, 1997, through June 30, 1998.

EFFECTIVE DATE: March 5, 1999.

FOR FURTHER INFORMATION CONTACT: Brian Ledgerwood or Barbara Wojcik-Betancourt, Import Administration, International Trade Administration, U.S. Department of Commerce, 14th Street and Constitution Avenue, N.W., Washington, D.C. 20230; telephone: (202) 482–3836 or (202) 482–0629, respectively.

Postponement of Preliminary Results of Administrative Review

The Department initiated the fifth administrative review of the antidumping duty order on PECTs from Japan on August 27, 1998 (63 FR 45796). The current deadline for the preliminary results in this review is April 2, 1999. In accordance with section 751 (a)(3)(A) of the Tariff Act of 1930 (''the Act''), as amended, the Department finds that it is not practicable to complete this administrative review within the original time frame. Specifically, the Department finds that additional time is needed to adequately consider the issues related to the possible revocation of the antidumping duty order, in part, on PECTs from Japan that are produced by the Makita Corporation and that are also exported by the Makita Corporation. (*See* memorandum from Holly Kuga to Robert LaRussa, dated February 26, 1999). Thus the Department is extending the time limit for completion of the preliminary results until August 2, 1999, which is 365 days after the last day of the anniversary month of the order. The final determination will occur within 120 days of the publication of the preliminary results.

Dated: February 26, 1999.

Holly A. Kuga,

Acting Deputy Assistant Secretary for Import Administration.

[FR Doc. 99–5506 Filed 3–4–99; 8:45 am]

BILLING CODE 3510–DS–P

DEPARTMENT OF COMMERCE

International Trade Administration

U.S.-China Housing Initiative

AGENCY: International Trade Administration, Commerce.

ACTION: Notice of opportunity to apply to serve on the U.S.-China Residential Building Council.

SUMMARY: The U.S.-China Housing Initiative was designed to facilitate a U.S. opportunity to meet emerging Chinese housing market demands. To guide and support the U.S.-China Housing Initiative, President Clinton announced the formation of the U.S.-China Residential Building Council during the U.S. China Presidential Summit in June of last year. Since that announcement, U.S. and Chinese officials have agreed on a structure for the Council and on the mutually beneficial areas of cooperation. The Departments of Commerce and Housing and Urban Development are seeking individuals who would like to serve on the U.S.-China Residential Building Council. Applicants may represent associations or non-governmental organizations prominent in the housing industry, or U.S. companies who are interested in the expansion of U.S. housing-related commercial interests in China. The Council will be made up of U.S. and Chinese representatives from the construction and housing policy sectors. Individual Council members will generally concentrate their efforts on one of the two sectors. The work of the Council will focus on activities which will assist China in developing a residential housing industry, residential construction and rehabilitation, and a housing finance system. The Council will be led by a Steering Committee with Secretary of Commerce William Daley and Secretary of the Department of Housing and Urban Development Andrew Cuomo, as the co-chairs. China's Minister of Construction, Yu Zhengsheng, will represent China.

DATES: In order to receive full consideration, requests must be received no later than May 7, 1999.

ADDRESSES: Please send your requests for consideration to U.S.-China Residential Building Council, U.S. Department of Commerce, Room 4039, 14th and Constitution Ave., NW, Washington, D.C. 20230. You may fax your request to (202) 482–0382.

FOR FURTHER INFORMATION CONTACT: Robert Reiley, Director, Office of Metals Materials, and Chemicals, U.S. Department of Commerce, Room 4039, 14th and Constitution Ave., NW, Washington, D.C. 20230, (202) 482–0575 telephone, (202) 482–0382 fax.

SUPPLEMENTARY INFORMATION: Members will serve on the Council for a two-year term at the discretion of the Secretaries. Members are expected to participate fully in defining the agenda for the Initiative and in implementing its work programs. It is expected that individuals chosen for the Council will attend at least 75 percent of Council meetings which will be held in the United States and China.

Members are fully responsible for travel, accommodation, and personal expenses associated with their participation in the Residential Building Council. The members will serve in a representative capacity presenting the views and interests of the particular business or housing sector in which they operate.

The U.S.-China Residential Building Council encourages the development of a housing industry in China and increased bilateral trade and investment including, but not limited to, the following:

- Implementing trade/business development and promotion programs including trade missions, technical assistance, conferences, exhibits, seminars and other events; and
- Adopting sectoral or project oriented approaches to support China's residential housing reform efforts.
- Implementing housing finance, planning, design, and building technology seminars and technical exchange to support reform efforts.

Selection

There are twelve available positions on the U.S. side of the Residential Business Council. This notice is seeking individuals to fill all twelve positions. The number of Council positions may be expanded, should the need arise.

Eligibility requirements. Applicants must:

- Be a U.S. citizen residing in the United States or a permanent United States resident;
- Be a CEO or other senior management employee of a U.S. company or association involved in the residential housing construction, supply, finance, or community planning sectors;
- Not be a registered foreign agent under the Foreign Agents Registration Act of 1938.

In reviewing eligible applicants, the Commerce Department, in consultation with HUD, will consider:

- The applicant's expertise in either construction building materials or housing policy and development;
- Readiness to initiate and be responsible for the activities the Council proposes to take on;
- An ability to contribute in light of overall Council composition;
- Diversity of company size, type, location, and demographics.

To be considered for membership, please provide the following: name and title of the individual requesting consideration; name and address of the company or association that the individual will represent; the specific product or service line; size of the company; and export expertise and major markets. Please also provide a brief statement on why each candidate should be considered for membership on the Council; the particular segment of the business community each candidate would represent; a personal resume; and a statement that the applicant is not a registered foreign agent under the Foreign Agents Registration Act.

Authority: 15 U.S.C. 1512.

Dated: February 23, 1999.

Robert Reiley,

Director, Office of Metals, Materials and Chemicals.

[FR Doc. 99–5507 Filed 3–4–99; 8:45 am]

BILLING CODE 3510–DR–P

DEPARTMENT OF COMMERCE

International Trade Administration

DEPARTMENT OF THE INTERIOR

Office of Insular Affairs

[Docket No. 980716178–8234–02]

RIN 0625–AA53

Allocation of Duty-Exemptions for Calendar Year 1999 Among Watch Producers Located in the Virgin Islands

AGENCY: Import Administration, International Trade Administration, Department of Commerce; Office of Insular Affairs, Department of the Interior.

ACTION: Notice.

SUMMARY: This action allocates 1999 duty-exemptions for watch producers located in the Virgin Islands pursuant to Pub. L. 97–446, as amended by Pub. L. 103–465 (''the Act'').

FOR FURTHER INFORMATION CONTACT: Faye Robinson, (202) 482–3526.

SUPPLEMENTARY INFORMATION: Pursuant to the Act, the Departments of the Interior and Commerce (the Departments) share responsibility for the allocation of duty exemptions among watch assembly firms in the United States insular possessions and the Northern Mariana Islands. In accordance with Section 303.3(a) of the regulations (15 CFR Part 303), this action establishes the total quantity of duty-free insular watches and watch movements for 1999 at 3,740,000 units and divides this amount among the three insular possessions of the United States and the Northern Mariana Islands. Of this amount, 2,240,000 units may be allocated to Virgin Islands producers, 500,000 to Guam producers, 500,000 to American Samoa producers and 500,000 to Northern Mariana Islands producers (63 FR 49666).

The criteria for the calculation of the 1999 duty-exemption allocations among insular producers are set forth in Section 303.14 of the regulations.

The Departments have verified and adjusted the data submitted on application form ITA–334P by Virgin Islands producers and inspected their current operations in accordance with Section 303.5 of the regulations.

In calendar year 1998 the Virgin Islands watch assembly firms shipped 805,890 watches and watch movements into the customs territory of the United States under the Act. The dollar amount of creditable corporate income taxes paid by Virgin Islands producers during calendar year 1998 plus the creditable wages paid by the industry during calendar year 1998 to residents of the territory was $3,310,945.

There are no producers in Guam, American Samoa or the Northern Mariana Islands.

The calendar year 1999 Virgin Islands annual allocations, based on the data verified by the Departments, are as follows:

Name of firm	Annual allocation
Belair Quartz, Inc.	500,000
Hampden Watch Co., Inc.	200,000
Progress Watch Co., Inc.	400,000
Unitime Industries, Inc.	500,000
Tropex, Inc.	300,000

Robert S. LaRussa,

Assistant Secretary for Import Administration, Department of Commerce.

Allen Stayman,

Director, Office of Insular Affairs, Department of the Interior.

[FR Doc. 99–5505 Filed 3–4–99; 8:45 am]

BILLING CODE 3510–DS–P and 4310–93–P

DEPARTMENT OF COMMERCE

National Oceanic and Atmospheric Administration

[Docket No. 990125028–9028–01]

RIN 0648–ZA54

Aquatic Nuisance Species Research and Outreach and Improved Methods for Ballast Water Treatment and Management: Request for Proposals for FY 1999

AGENCY: National Sea Grant College Program, National Oceanic and Atmospheric Administration, Department of Commerce.

ACTION: Notice of request for proposals.

SUMMARY: The purpose of this notice is to advise the public that the National Sea Grant College Program (Sea Grant) is entertaining preliminary proposals and subsequently full proposals for innovative research, outreach, and demonstration projects that address the problems of Aquatic Nuisance Species in U.S. coastal waters. In FY 1999 and 2000, Sea Grant expects to make available about $2,300,000 per year to support projects to prevent and/or control nonindigenous species invasions in all U.S. marine waters, the Great Lakes, and Lake Champlain; matching funds equivalent to a minimum of 50% of the Federal request must be provided. In FY 1999 only, Sea Grant also expects to make available about $1,000,000 to support demonstration projects to improve ballast water treatment and management in Chesapeake Bay and the Great Lakes, matching funds may also be included for these projects, but are not required. Successful projects will be selected through national competitions.

DATES: Preliminary proposals must be submitted before 5 pm (local time) on April 5, 1999 to the nearest state Sea Grant College Program or the National Sea Grant Office (NSGO). After evaluation at the NSGO, some proposers will be encouraged to prepare full proposals, which must be submitted before 5 pm (local time) on May 27, 1999 to the nearest state Sea Grant College Program or NSGO.

ADDRESSES: Investigators located in states with Sea Grant Programs must submit their preliminary proposals and full proposals through those programs. The addresses of the Sea Grant College Program directors may be found on Sea Grant's home page (http://www.mdsg.umd.edu/NSGO/index.html) or may also be obtained by contacting the Program Manager at the National Sea Grant Office (see below). Investigators from non-Sea Grant states applying for the ''Ballast Water Treatment and Management Program,'' only, may submit their preliminary proposals and proposals directly to the National Sea Grant Office at: National Sea Grant College Program, R/SG, Attn: Aquatic Nuisance Species Competition, Room 11841, NOAA, 1315 East-West Highway, Silver Spring, MD 20910.

FOR FURTHER INFORMATION CONTACT: Leon M. Cammen, Aquatic Nuisance Species Coordinator, National Sea Grant College Program, R/SG, NOAA, 1315 East-West Highway, Silver Spring, MD 20910, or Mary Robinson, Secretary, National Sea Grant Office, 301–713–2435; facsimile 301–713–0799.

SUPPLEMENTARY INFORMATION:

I. Program Authority

Authority: 33 U.S.C. 1121–1131.

Catalog of Federal Assistance Number: 11.417, Sea Grant Support.

II. Program Description

Background

Nonindigenous species introductions are increasing in frequency and causing substantial damage to the Nation's environment and economy. Although the most prominent of these has been the zebra mussel, many other nonindigenous species have been introduced and have truly become a nationwide problem that threatens many aquatic ecosystems. While some intentional introductions may have had beneficial effects, there are many other nonindigenous species already present in U.S. waters, or with the potential to invade, that may cause significant damage to coastal resources and the economies that depend upon them. In response, the Nonindigenous Aquatic Nuisance Prevention and Control Act of 1990 (16 U.S.C. 4701 et seq.) established a framework for the Nation to address the problems of aquatic nuisance species invasions of coastal and Great Lakes ecosystems.

Although problems such as the zebra mussel and the sea lamprey within the Great Lakes have received the most attention, invasions of nonindigenous species in coastal marine environments are an increasing and serious threat. The National Invasive Species Act of 1996 (16 U.S.C. 4711–4714) recognized this by calling for Federal funding to support aquatic nuisance species prevention and control along the Nation's marine coast.

In addition, the Act recognized the serious threat posed by ballast water discharge in causing new invasions and called for ballast water management demonstration programs. A 1996 National Research Council study of the ballast water problem, ''Stemming the Tide,'' concluded that with the growth of global shipping, and the changes in modern shipping practices, introductions of nonindegenous species through ballast water discharge were likely to remain a serious problem. The study called for the development of improved technology for the management of ballast water to eliminate this threat to the Nation's ecosystems. A demonstration project testing filtration of ballast water as a method of reducing introductions is currently underway in the Great Lakes, but it is acknowledged that there is unlikely to be a single solution that is acceptable for all modes of shipping operations and classes of vessels.

Funding Availability and Priorities

The National Sea Grant College Program encourages proposals that address one of the following two program areas:

(1) Research and Outreach to Prevent and Control Aquatic Nuisance Species Invasions

An interagency Ad Hoc Committee on Exotic Species in the Great Lakes has prepared a report entitled, ''Coordinated Program of Research for Exotic Species in the Great Lakes.'' Although targeted for the Great Lakes, the report provides a useful framework for research and outreach on any nonindigenous species problems and is therefore being used to structure this more general request for proposals covering U.S. marine waters, the Great Lakes, and Lake Champlain. Research and outreach proposals are requested that address one or more of the following program areas:

(a) Biology and Life History: Basic biological research into population dynamics, genetics, physiology, behavior, and parasites and diseases of nonindigenous species with the potential to lead to the development of ecologically safe, effective, and inexpensive control. Research on the ecological and environmental tolerances of nonindigenous species with the potential for prediction of eventual geographic and ecological impacts.

(b) Effects on Ecosystems: Research on the impacts of nonindigenous species at

each stage of their life history with the potential for helping natural resource managers determine how to minimize the impacts on established biota and their habitats.

(c) Socio-Economic Analysis: Costs and Benefits: Research on the potential impacts of nonindigenous species on human health in terms of spread of disease, concentration of pollutants, and contamination or purification of drinking water sources. Economic impact on sport, commercial and tribal fisheries, the recreation and tourism industry, and tribal fisheries, the recreation and tourism industry, the shipping and navigation industry, and municipal and industrial water users. Use of research results to provide a scientific basis for developing sound policy and environmental law, and for public education and technology transfer.

(d) Control and Mitigation: Research into various types of control—engineering (redesigning water intakes, etc.), physical (scraping, filtering, etc.), chemical (biocides, antifoulants, etc.), biological (parasites, predators, etc.), and physicochemical (heat, salinity, pH, etc.)—to develop selective, effective controls that minimize adverse ecological/environmental impacts. Outreach activities that will transfer these technologies to the appropriate users.

(e) Preventing New Introductions: Research and outreach into identifying vectors of introduction, developing cost-effective, realistic methods of prevention, and transferring the information to appropriate users. In particular, research to develop workable and effective methods to eliminate ballast water discharge as a source of nonindigenous species introductions without imposing undue hardships on the shipping industry.

(f) Reducing the Spread of Established Populations: Research and outreach to identify mechanisms for further dispersal of individual established species that will lead to the development of safeguards and protocols to prevent and/or slow the spread of nonindigenous species to uninfested areas, and transfer of that information to appropriate users.

(g) Ballast Water Pathogens and Public Health: Research to assess the public health risks posed by pathogens released in ballast waters discharges in U.S. ports.

About $2,300,000 is available from the National Sea Grant College Program to support these projects in FY 1999; an additional $2,300,000 may be available in FY 2000 depending on the overall funding appropriation for the National Sea Grant College Program. Of this amount, 70% of the funds will be made available to support research projects and 30% for outreach activities. Project activities should include identified milestones for each project year, and the second year of funding is contingent upon availability of funds and submission of an annual report showing satisfactory progress. Proposals may request up to $150,000 per year and each proposal must include additional matching funds equivalent to at least 50% of the Federal funds requested; for example, a proposal requesting a total of $200,000 in Federal support for two years would have to include at least an additional $100,000 in matching funds. Regardless of any approved indirect cost rate applicable to the award, the maximum dollar amount of allocable indirect costs for which the Department of Commerce will reimburse the Recipient shall be the lesser of: (a) the Federal share of the total allocable indirect costs of the award based on the negotiated rate with the cognizant Federal agency as established by audit or negotiation; or (b) The line item amount for the Federal share of indirect costs contained in the approved budget of the award.

(2) Ballast Water Treatment and Management

Research to develop workable and effective methods to eliminate ballast water discharge as a source of nonindigenous species introductions without imposing undue hardships on the shipping industry. Possible approaches include (but are not limited to) development and/or demonstration of technologies for treatment or management of ballast water on-board ship or for on-shore management. Projects that include on-vessel or on-shore demonstrations of feasibility will be given priority. Projects must be clearly targeted toward addressing ballast water management in either Chesapeake Bay or the Great Lakes, but investigators located outside those regions may participate if all demonstrations are carried out in the targeted regions.

About $1,000,000 is available for this activity in FY 1999, of which as least $240,000 will be used to support Chesapeake Bay activities. Proposals are limited to one year of funding, but activities may extend for up to two years; an annual report showing satisfactory progress must be submitted at the end of the first year. Project activities should include identified milestones for each project year. Proposals may request up to $500,000 in Federal support; matching funds may also be included, but are not required. Regardless of any approved indirect cost rate applicable to the award, the maximum dollar amount of allocable indirect costs for which the Department of Commerce will reimburse the Recipient shall be the lesser of: (a) The Federal share of the total allocable indirect costs of the award based on the negotiated rate with the cognizant Federal agency as established by audit or negotiation; or (b) the line item amount for the Federal share of indirect costs contained in the approved budget of the award.

III. Eligibility

Applications may be submitted by individuals; public or private corporations, partnerships, or other associations or entities (including institutions of higher education, institutes, or non-Federal laboratories), or any State, political subdivision of a State, or agency or officer thereof.

IV. Evaluation Criteria

The evaluation criteria for proposals submitted for support under the ''Research and Outreach to Prevent and Control Aquatic Nuisance Species Invasions'' program area are:

(1) Impact of proposed project (50%): Significance of the aquatic nuisance species problem that will be addressed; the effect this activity will have on reducing the impact of nonindigenous species on the environment and/or the economy, or the need for this activity as a necessary step toward such a reduction in impact.

(2) Scientific or Professional Merit (20%): Degree to which the activity will advance the state of the science or discipline through use and extension of state-of-the-art methods.

(3) User Relationships (15%): Degree to which potential users of the results of the proposed activity have been involved in planning the activity and/or will be involved in the execution of the activity.

(4) Innovativeness (10%): Degree to which new approaches to solving problems and exploiting opportunities in resource management or development, or in public outreach on such issues will be employed; alternatively, the degree to which the activity will focus on new types of important or potentially important resources and issues.

(5) Qualifications and Past Record of Investigators (5%): Degree to which investigators are qualified by education, training, and/or experience to execute the proposed activity; record of achievement with previous funding.

The evaluation criteria for proposals submitted for support under the ''Ballast Water Treatment and Management'' program area are:

(1) Impact of proposed project (40%): Potential effectiveness of ballast water treatment technologies or practices in reducing introductions of nonindigenous species.

(2) Field-Scale Demonstration (10%): Inclusion of a field-scale demonstration of the proposed ballast water treatment technology or practices.

(3) Scientific or Professional Merit (20%): Degree to which the activity will advance the state of the science or discipline through use and extension of state-of-the-art methods.

(4) User Relationships (15%): Degree to which potential users of the results of the proposed activity have been involved in planning the activity, will be involved in the execution of the activity, and/or are providing matching funds.

(5) Innovativeness (10%): Degree to which new approaches to solving problems and exploiting opportunities in resource management or development, or in public outreach on such issues will be employed; alternatively, the degree to which the activity will focus on new types of important or potentially important resources and issues.

(6) Qualifications and Past Record of Investigators (5%): Degree to which investigators are qualified by education, training, and/or experience to execute the proposed activity; record of achievement with previous funding.

V. Selection Procedures

Preliminary proposals will be reviewed at the NSGO by a panel composed of government, academic, and industry experts. The panel will be asked to assess each proposal according to the evaluation criteria listed above. The panel will make individual recommendations to the Director of the NSGO regarding which preliminary proposals may be suitable for further consideration. On the basis of the panel's recommendations, the Director of the NSGO will advise proposers whether or not the submission of full proposals is encouraged. Invitation to submit a full proposal does not constitute an indication that the proposal will be funded. Interested parties who are not invited to submit full proposals will not be precluded from submitting full proposals if they have submitted a preliminary proposal in accordance with the procedures described below.

Full proposals will be received at the individual state SEa Grant Programs or at the National Sea Grant Office, if from a non-Sea Grant state, and sent to peer reviewers for written reviews. The National Sea Grant Office will obtain the written reviews for proposals from non-Sea Grant states. Complete full proposals and their written reviews will be sent by the state Sea Grant programs to the National Sea Grant Office to be ranked in accordance with the assigned weights of the above evaluation criteria by one of two independent peer review panels consisting of government, academic, and industry experts; one panel will review the ''Research and Outreach to Prevent and Control Aquatic Nuisance Species Invasions'' proposals and a second panel will review the ''Ballast Water Treatment and Management'' proposals. These panel members will provide individual evaluations on each proposal, but there will be no consensus advice. Their recommendations and evaluations will be considered by the National Sea Grant Office in the final selection. Only those proposals rated by the panel as either Excellent, Very Good or Good will be eligible for funding. For those proposals, the National Sea Grant Office will: (a) ascertain which proposals best meet the program priorities, and do not substantially duplicate other projects that are currently funded or are approved for funding by NOAA and other federal agencies, hence, awards may not necessarily be made to the highest-scored proposals; (b) select the proposals to be funded; (c) determine which components of the selected projects will be funded; (d) determine the total duration of funding for each proposal; and (e) determine the amount of funds available for each proposal. Investigators may be asked to modify objectives, work plans, or budgets prior to final approval of the award. Subsequent grant administration procedures will be in accordance with current NOAA grants procedures. A summary statement of the scientific review by the peer panel will be provided to each applicant.

VI. Instructions for Application

Timetable

April 5, 1999, 5 pm (local time)—Preliminary proposals due at state Sea Grant Program.

April 8, 1999, 5 pm EST—Preliminary proposals due at NSGO.

May 27, 1999, 5 pm (local time)—Full proposals due at state Sea Grant Program.

July 7, 1999, 5 pm EST—Full proposals due at NSGO.

October 1, 1999 (approximate)—Funds awarded to selected recipients; projects begin.

General Guidelines

The ideal proposal attacks a well-defined problem that will be or is a significant societal issue. The organization or people whose task it will be to make related decisions, or who will be able to make specific use of the projects results, will have been identified and contacted by the Principal Investigator(s). The project will show an understanding of what constitutes necessary and sufficient information for responsible decision-making or for applied use, and will show how that information will be provided by the proposed activity, or in concert with other planned activities.

Research projects are expected to have: a rigorous, hypothesis-based scientific work plan, or a well-defined, logical approach to address an engineering problem; a strong rationale for the proposed research; and a clear and established relationship with the ultimate users of the information. Research undertaken jointly with industry, business, or other agencies with interest in the problem will be seen as being meritorious. Their contribution to the research may be in the form of collaboration, in-kind services, or dollars support. Projects that are solely monitoring efforts are not appropriate for funding.

What to Submit

Preliminary Proposal Guidelines

To prevent the expenditure of effort that may not be successful, proposers must first submit preliminary proposals. Preliminary proposals must be single- or double-spaced, typewritten in at least a 10-point font, and printed on metric A4 (210 mm × 297 mm) or 8½″ × 11″ paper. The following information should be included:

(1) Signed Title Page: The title page should be signed by the Principal Investigator and should clearly identify the program area being addressed by starting the project title with either ''Research and Outreach to Prevent and Control Aquatic Nuisance Species Invasions'' or ''Ballast Water Treatment and Management.'' Principal Investigators and collaborators should be identified by affiliation and contact information. The total amount of Federal funds and matching funds being requested should be listed for each budget period, as well as the source of the matching funds. Preliminary proposals for ''Research and Outreach to Prevent and Control Aquatic Nuisance

Species Invasions'' must include matching funds equivalent to at least 50% of the Federal funds requested; matching funds are encouraged, but not required, for ''Ballast Water Treatment and Management'' proposals.

(2) A concise (2-page limit) description of the project, its expected output or products, the anticipated users of the information, and its anticipated impact. Proposers may wish to use the Evaluation Criteria for additional guidance in preparing the preliminary proposals.

(3) Resumes (1-page limit) of the Principal Investigators.

(4) Proposers are encouraged (but not required) to include a separate page suggesting reviewers that the proposers believe are especially well qualified to review the proposal. Proposers may also designate persons they would prefer not review the proposal, indicating why. These suggestions will be considered during the review process.

Three copies of the preliminary proposals must be submitted to the state Sea Grant Program Director or, for investigators in non-Sea Grant states, directly to the National Sea Grant Office (NSGO) before 5 pm (local time) on April 5, 1999. Preliminary proposals submitted to state Sea Grant Programs will be forwarded, along with a cover letter, to Dr. Leon Cammen, Aquatic Nuisance Species Coordinator, at the address below so as to reach the National Sea Grant Office (NSGO) on or before 5 pm on April 8, 1999. No institutional signatures or federal government forms are needed while submitting preliminary proposals.

Full Proposal Guidelines

Each full proposal should include the items listed below. All pages should be single- or double-spaced, typewritten in at least a 10-point font, and printed on metric A4 (210 mm × 297 mm) or 8½″ × 11″ paper. Brevity will assist reviewers and program staff in dealing effectively with proposals. Therefore, the Project Description may not exceed 15 pages. Tables and visual materials, including charts, graphs, maps, photographs and other pictorial presentations are included in the 15-page limitation; literature citations are not included in 15-page limitation. Conformance to the 15-page limitation will be strictly enforced. All information needed for review of the proposal should be included in the main text; no appendices are permitted.

(1) Signed Title Page: The title page should be signed by the Principal Investigator and the institutional representative and should clearly identify the program area being addressed by starting the project title with either ''Aquatic Nuisance Species Research and Outreach'', or ''Ballast Water Treatment and Management'' as appropriate. The Principal Investigator and institutional representative should be identified by full name, title, organization, telephone number and address. The total amount of Federal funds being requested should be listed for each budget period.

(2) Project Summary: This information is very important. Prior to attending the peer review panel meetings, some of the panelists may read only the project summary. Therefore, it is critical that the project summary accurately describe the research being proposed and convey all essential elements of the research. The project summary should include: 1. Title: Use the exact title as it appears in the rest of the application. 2. Investigators: List the names and affiliations of each investigator who will significantly contribute to the project. Start with the Principal Investigator. 3. Funding request for each year of the project, including matching funds if appropriate. 4. Project Period: Start and completion dates. Proposals should request a start date of October 1, 1999, or later. 5. Project Summary: This should include the rationale for the project, the scientific or technical objectives and/or hypotheses to be tested, and a brief summary of work to be completed.

(3) project Description (15-page limit):

(a) Introduction/Background/Justification: Subjects that the investigator(s) may wish to include in this section are: (i) current state of knowledge; (ii) contributions that the study will make to the particular discipline or subject area; and (iii) contributions the study will make toward addressing the problem of nonindigenous species.

(b) Research or Technical Plan: (i) Objectives to be achieved, hypotheses to be tested; (ii) Plan of work—discuss how stated project objectives will be achieved; and (iii) Role of project personnel.

(c) Output: Describe the project outputs that will enhance the Nation's ability to manage and control nonindigenous species impacts.

(d) Coordination with other Program Elements: Describe any coordination with other agency programs or ongoing research efforts. Describe any other proposals that are essential to the success of this proposal.

(e) Literature Cited: Should be included here, but does not count against the 15-page limit.

(4) Budget and Budget Justification: There should be a separate budget for each year of the project as well as a cumulative annual budget for the entire project. Applicants are encouraged to use the Sea Grant Budget Form 90–4, but may use their own form as long as it provides the same information as the Sea Grant form. Subcontracts should have a separate budget page. Matching funds must be indicated if required; failure to provide adequate matching funds will result in the proposal being rejected without review. Applicants should provide justification for all budget items in sufficient detail to enable the reviewers to evaluate the appropriateness of the funding requested. For all applications, regardless of any approved indirect cost rate applicable to the award, the maximum dollar amount of allocable indirect costs for which the Department of Commerce will reimburse the Recipient shall be the lesser of: (a) The Federal share of the total allocable indirect costs of the award based on the negotiated rate with the cognizant Federal agency as established by audit or negotiation; or (b) The line item amount for the Federal share of indirect costs contained in the approved budget of the award.

(5) Current and Pending Support: Applicants must provide information on all current and pending support for ongoing projects and proposals, including subsequent funding in the case of continuing grants. All current project support from whatever source (e.g., Federal, State or local government agencies, private foundations, industrial or other commercial organizations) must be listed. The proposed project and all other projects or activities requiring a portion of time of the principal investigator and other senior personnel should be included, even if they receive no Federal salary support from the project(s). The number of person-months per year to be devoted to the projects must be stated, regardless of source of support. Similar information must be provided for all proposals already submitted or submitted concurrently to other possible sponsors, including those within NOAA.

(6) Vitae (2 pages maximum per investigator).

(7) Research Protocol (if appropriate): Research activities funded under this program must not accelerate the spread of nonindigenous species to non-invested watersheds. Therefore, investigators whose laboratories or research study sites are in currently uninfested areas must adopt procedures for handling the particular nonindigenous species that will prevent

its release into the environment. Such proposals must contain a research protocol for review by interagency committee created under the Nonindigenous Aquatic Nuisance Prevention and Control Act of 1990 (16 U.S.C. 4701 et seq.) before the grant can be awarded. Guidelines for developing suitable protocols are available through the World Wide Web (www.mdsg.umd.edu/NSGO/research/nonindigenous/RFP99.html) or from Dr. Leon Cammen at the National Seat Grant Office (phone: 301–713–2435 x136 or e-mail: leon.cammen @noaa.gov). Proposals lacking a suitable protocol will not be eligible for funding.

(8) Declaration of Vessel Selection (if appropriate): Applications proposing on-board demonstrations of ballast water management should address the requirements and priorities listed in the National Invasive Species Act of 1996 (16 U.S.C. 4711–4714) for selecting vessels for demonstration projects. These requirements are available through the World Wide Web (www.mdsg.umd.edu/NSGO/research/nonindigenous/RFP99.html) or from Dr. Leon Cammen at the National Sea Grant Office (phone: 301–713–2435 x136 or e-mail: leon.cammen@noaa.gov).

(9) Standard Application Forms: Applicants may obtain all required application forms through the World Wide Web at http://www.mdsg.umd.edu/NSGO/research/rfp/index.html, from the state Sea Grant Programs or from Dr. Leon Cammen at the National Sea Grant Office (phone: 301–713–2435 x136 or e-mail: leon.cammen@noaa.gov). The following forms must be included:

(a) Standard Forms 424, Application for Federal Assistance, 424A, Budget Information—Non-Construction Programs; and 424B, Assurances—Non-Construction Programs, (Rev 4–88). Applications should clearly identify the program area being addressed by starting the project title with either ''Aquatic Nuisance Species Research and Outreach'' or ''Ballast Water Management'' as appropriate. Please note that both the Principal Investigator and an administrative contact should be identified in Section 5 of the SF424. For Section 10, applicants should enter ''11.417'' for the CFDA Number and ''Sea Grant Support'' for the title. The form must contain the original signature of an authorized representative of the applying institution.

(b) Primary Applicant Certifications. All primary applicants must submit a completed Form CD–511, ''Certifications Regarding Debarment, Suspension and Other Responsibility Matters; Drug-Free Workplace Requirements and Lobbying,'' and the following explanations are hereby provided:

(i) Nonprocurement Debarment and Suspension. Prospective participants (as defined at 15 CFR Part 26, Section 105) are subject to 15 CFR Part 26, ''Nonprocurement Debarment and Suspension'' and the related section of the certification form prescribed above applies;

(ii) Drug-Free Workplace. Grantees (as defined at 15 CFR Part 26, Section 605) are subject to 15 CFR Part 26, Subpart F, ''Governmentwide Requirements for Drug-Free Workplace (Grants)'' and the related section of the certification form prescribed above applies;

(iii) Anti-Lobbying. Persons (as defined at 15 CFR Part 28, Section 105) are subject to the lobbying provisions of 31 U.S.C. 1352, ''Limitation on use of appropriated funds to influence certain Federal contracting and financial transactions,'' and the lobbying section of the certification form prescribed above applies to applications/bids for grants, cooperative agreements, and contracts for more than $100,000, and loans and loan guarantees for more than $150,000, or the single family maximum mortgage limit for affected programs, whichever is greater; and

(iv) Anti-Lobbying Disclosure. Any applicant that has paid or will pay for lobbying using any funds must submit an SF–LLL, ''Disclosure of Lobbying Activities,'' as required under 15 CFR Part 28, Appendix B.

(c) Lower Tier Certifications. Recipients shall required applicants/bidders for subgrants, contracts, subcontracts, or other lower tier covered transactions at any tier under the award to submit, if applicable, a completed Form CD–512, ''Certifications Regarding Debarment, Suspension, Ineligibility and Voluntary Exclusion-Lower Tier Covered Transactions and Lobbying'' and disclosure form, SF–LLL, ''Disclosure of Lobbying Activities.'' Form CD–512 is intended for the use of recipients and should not be transmitted to the Department of Commerce (DOC). SF–LLL submitted by any tier recipient or subrecipient should be submitted to DOC in accordance with the instructions contained in the award document.

VII. How to Submit

Preliminary proposals and proposals must be submitted to the state Sea Grant Programs or, for investigators in non-Sea Grant states, directly to the National Sea Grant Office (NSGO), according to the schedule outlined above. Although investigators are not required to submit more than 3 copies of either preproposals or full proposals, the normal review process requires 10 copies. Investigators are encouraged to submit sufficient copies for the full review process if they wish all reviewers to receive color, unusually sized (not 8.5×11″), or otherwise unusual materials submitted as part of the proposal. Only three copies of the Federally required forms are needed. The addresses of the Sea Grant College Program directors may be found on Sea Grant's World Wide Web home page (http://www.mdsg.umd.edu/NSGO/index.html) or may also be obtained by contracting the Program Manager, Dr. Leon M. Cammen, at the National Sea Grant Office (phone: 301–713–2435 x136 or e-mail: leon.cammen@noaa.gov). Preproposals and proposals sent to the National Sea Grant Office should be addressed to: National Sea Grant Office R/SG, Attn: Aquatic Nuisance Species Coordinator, NOAA, Room 11841, 1315 East-West Highway, Silver Spring, MD 20910 (phone 301–713–2535 for express mail applications).

Applications received after the deadline and applications that deviate from the format described above will be returned to the sender without review. Facsimile transmissions and electronic mail submission of full proposals will not be accepted. If you have any questions or require further information, contact one of the agency coordinators listed above.

VIII. Other Requirements

(A) Federal Policies and Procedures—Recipients and subrecipients are subject to all Federal laws and Federal and Department of Commerce (DOC) policies, regulations, and procedures applicable to Federal financial assistance awards.

(B) Past Performance—Unsatisfactory performance under prior Federal awards may result in an application not being considered for funding.

(C) Preaward Activities—If applicants incur any costs prior to an award being made, they do so solely at their own risk of not being reimbursed by the Government. Notwithstanding any verbal or written assurance that may have been received, there is no obligation on the part of DOC to cover preaward costs.

(D) No Obligation for Future Funding—If an application is selected for funding, DOC has no obligation to provide any additional future funding in connection with that award. Renewal of an award to increase funding or extend the period of performance is at the total discretion of DOC.

(E) Delinquent Federal Debts—No award of Federal funds shall be made to an applicant who has an outstanding delinquent Federal debt until either:

(1) The delinquent account is paid in full,

(2) A negotiated repayment schedule is established and at least one payment is received, or

(3) Other arrangements satisfactory to DOC are made.

(F) Name Check Review—All non-profit and for-profit applicants are subject to a name check review process. Name checks are intended to reveal if any key individuals associated with the applicant have been convicted of or are presently facing criminal charges such as fraud, theft, perjury, or other matters which significantly reflect on the applicant's management honesty or financial integrity.

(G) False Statements—A false statement on an application is grounds for denial or termination of funds and grounds for possible punishment by a fine or imprisonment as provided in 18 U.S.C. 1001.

(H) Intergovernmental Review—Applications for support from the National Sea Grant College Program are not subject to Executive Order 12372, ''Intergovernmental Review of Federal Programs.

(I) Purchase of American-Made Equipment and Products—Applicants are hereby notified that they will be encouraged to the greatest extend practicable, to purchase American-made equipment and products with funding provided under this program.

Classification

Prior notice and an opportunity for public comments are not required by the Administrative Procedure Act or any other law for this notice concerning grants, benefits, and contracts. Therefore, a regulatory flexibility analysis is not required for purposes of the Regulatory Flexibility Act.

This action has been determined to be not significant for purposes of E.O. 12866.

This notice contains collection of information requirements subject to the Paperwork Reduction Act. The Sea Grant Budget Form and Standard Forms 424, 424a and 424b have been approved under control numbers 0648–0362, 0348–0043, 0348–0044, and 0348–0040 with average responses estimated to take 15, 45, 180, and 15 minutes, respectively. These estimates include the time for reviewing instructions, searching existing data sources, gathering and maintaining the data needed, and completing and reviewing the collection of information. Send comments on these estimates or any other aspect of these collections to National Sea Grant College Program, R/SG, NOAA, 1315 East-West Highway, Silver Spring, MD 20910 (Attention: Francis S. Schuler) and to the Office of Information and Regulatory Affairs, Office of Management and Budget, Washington, DC 20503 (Attention: NOAA Desk Officer). Notwithstanding any other provision of the law, no person is required to respond to, nor shall any person be subject to a penalty for failure to comply with, a collection of information subject to the requirements of the Paperwork Reduction Act, unless that collection of information displays a currently valid OMB Control Number.

Dated: February 25, 1999.

Louisa Koch,

Deputy Assistant Administrator, Office of Oceanic and Atmospheric Research, National Oceanic and Atmospheric Administration.

[FR Doc. 99–5114 Filed 3–4–99; 8:45 am]

BILLING CODE 3510–KA–M

DEPARTMENT OF COMMERCE

National Oceanic and Atmospheric Administration

[Docket No. 990125029–9029–01]

RIN 0648–ZA55

Dean John A. Knauss Marine Policy Fellowship National Sea Grant College Federal Fellows Program

AGENCY: Office of Oceanic and Atmospheric Research, National Oceanic and Atmospheric Administration, Commerce.

ACTION: Notice.

SUMMARY: This notice announces that applications may be submitted for a Fellowship program which was initiated by the National Sea Grant College Program Office (NSGCPO), in fulfilling its broad educational responsibilities, to provide educational experience in the policies and processes of the Legislative and Executive Branches of the Federal Government to graduate students in marine related fields. The Fellowship program accepts applications once a year during the month of September. All applicants must submit an application to one of the Sea Grant College Programs in their state. If there is no program in the applicant's state they should apply through the closest state Sea Grant College Program.

DATES: Deadlines vary from state to state, but are generally due in early August. Contact your state Sea Grant College Program for specific deadlines (see list below).

ADDRESSES: Applications should be addressed to the Sea Grant College Program in your state or the closest state. Contact your state Sea Grant College program for the mailing address from the list below.

FOR FURTHER INFORMATION CONTACT: Information and brochures can be obtained from Dr. Sharon H. Walker, Acting Director (until September 1, 1999), or from Dr. Shirley J. Fiske, Director (after September 1), National Sea Grant Federal Fellows Program, National Sea Grant College Program, 1315 East-West Highway, Silver Spring, Maryland 20910, telephone (301) 713–2431 extension 148 or call your nearest Sea Grant program:

University of Alaska—(907) 474–7086
University of California—(619) 534–4440
University of Connecticut—(860) 405–9128
University of Delaware—(302) 831–2841
University of Florida—(352) 392–5870
University of Georgia—(706) 542–6009
University of Hawaii—(808) 956–7031
University of Illinois—(765) 494–3593
Louisiana State University—(504) 388–6710
University of Maine—(207) 581–1436
University of Maryland—(301) 405–6209
Massachusetts Institute of Technology—(617) 253–7131
University of Michigan—(734) 763–1437
University of Minnesota—(218) 726–8106
Mississippi-Alabama Sea Grant Consortium—(228) 875–9341
University of New Hampshire—(603) 862–0122
New Jersey Marine Science Consortium—(732) 872–1300
State University of New York—(516) 632–6905
University of North Carolina—(919) 515–2454
The Ohio State University—(614) 292–8949
Oregon State University—(541) 737–2714
University of Puerto Rico—(787) 832–3585
Purdue University—(765) 494–3593
University of Rhode Island—(401) 874–6800
South Carolina Sea Grant Consortium—(843) 727–2078
University of Southern California—(213) 740–1961
Texas A&M University—(409) 845–3854
Virginia Graduate Marine Science Consortium—(804) 924–5965
University of Washington—(206) 543–6600

University of Wisconsin—(608) 262–0905
Woods Hole Oceanographic Institute—(508) 289–2557

SUPPLEMENTARY INFORMATION:

Dean John A. Knauss Marine Policy Fellowship National Sea Grant College Federal Fellows Program

Purpose of the Fellowship Program

In 1979, the National Sea Grant College Program Office (NSGCPO), in fulfilling its broad educational responsibilities, initiated a program to provide educational experience in the policies and processes of the Legislative and Executive Branches of the Federal Government to graduate students in marine related fields. The U.S. Congress recognized the value of this program and in 1987, Public Law 100–200 stipulated that the Sea Grant Federal Fellows Program was to be a formal part of the National Sea Grant College Program Act. The recipients are designated Dean John A. Knauss Marine Policy Fellows pursuant to 33 U.S.C. 1127(b).

Announcement

Fellows program announcements are sent annually to all participating Sea Grant institutions and campuses by the state Sea Grant Director upon receipt of notice from the National Sea Grant College Program Office (NSGCPO). A brochure describing the program is also available from the NSGCPO for distribution by both that office and the state Sea Grant programs.

Eligibility

Any student who, on September 24, 1999, is in a master's, doctoral or professional program in a marine related field from any accredited institution of higher education in the United States may apply to the NSGCPO through the state or closest state Sea Grant program. NOAA makes financial assistance funds available to the National Sea Grant Colleges to implement the fellowship program. The National Sea Grant College Program is listed in the Catalog of Federal Domestic Assistance under number 11.417: Sea Grant Support.

Deadlines

Applications should be obtained from the state Sea Grant Director and the signed applications must be submitted by the date set in each state Sea Grant program's announcement (usually early to mid-September). State Sea Grant programs may elect and forward to the National Office no more than four (4) finalists according to a selection criteria comparable to that used by the National Office in the national competition. Applications are to be submitted to the NSGCPO by the sponsoring state Sea Grant Director, no later than close of business on September 24th of any given year. The competitive selection process and subsequent notification will be completed by October 24th of any given year.

Stipend and Expenses

For FY 2000 a Fellow will receive an award of $36,000 which is distributed between salary (stipend) and living expenses in accordance with University guidelines. Other expenses covered are travel, moving costs, health insurance and institutional overhead.

Application

An application will include:

Personal and academic resume or curriculum vitae.

Personal education and career goal statement which emphasizes expectations from the experience in the way of career development (not to exceed 2 pages).

No more than two letters of recommendation with at least one being from the student's major professor.

A letter of endorsement from the sponsoring state Sea Grant Director.

Copy of undergraduate and graduate student transcripts. No thesis papers, publications or other additional supporting documents are desired.

It is our intent that all applicants be evaluated only on their ability, therefore letters of endorsements from members of Congress, friends, relatives or others will not be considered.

Placement preference in the Executive or Legislative Branches of the Government may be stated, and will be honored to the extent possible.

Selection Criteria

The selection criteria will include:

Strength of academic performance.

Communications skills (both written and oral).

Diversity of academic background.

Work experience.

Support of major professor.

Support of Sea Grant Director.

Ability to work with people.

Selection

Applicants will be individually reviewed and ranked, according to the criteria outlined above, by a panel including representation from (1) the Sea Grant Association, (2) the Office of Oceanic and Atmospheric Research, and (3) the current and possibly last past group of Fellows. The individuals representative of these groups will be chosen on a year by year basis according to availability, timing, and other exigencies. Relative weights for the evaluation criteria are equal. The Federal Fellowship Director of the National Sea Grant Office will then group the top-ranked applicants into two categories, legislative and executive, based upon the applicant's stated preference and/or judgment of the panel based upon material submitted. The number of fellows assigned to the Congress will be limited to 10.

Federal Policies and Procedures

Fellows receive funds directly from the National Sea Grant Colleges, and are considered to be subrecipients of Federal assistance subject to all Federal laws and Federal and Commerce Department policies, regulations, and procedures applicable to Federal financial assistance awards.

Past Performance

Unsatisfactory performance under prior Federal awards may result in an application not being considered for funding.

Pre-Award Activities

If applicants incur any costs prior to an award being made, they do so solely at their own risk of not being reimbursed by the Government. Notwithstanding any verbal or written assurance that may have been received, there is no obligation on the part of Department of Commerce to cover pre-award costs.

No Obligation for Future Funding

If an applicant is selected for funding, Department of Commerce has no obligation to provide any additional future funding in connection with that award. Renewal of an award to increase funding or extend the period of performance is at the total discretion of Department of Commerce.

Delinquent Federal Debts

No award of Federal funds shall be made to a Fellows applicant who has an outstanding delinquent Federal debt or fine until either:

i. The delinquent account is paid in full,

ii. A negotiated repayment schedule is established and at least one payment is received, or

iii. Other arrangements satisfactory to Department of Commerce are made.

Name Check Review

All non-profit and for-profit applicants are subject to a name check review process. Name checks are intended to reveal if any key individuals associated with the applicant have been convicted of or are presently facing criminal charges such as fraud, theft, perjury, or other matters which

significantly reflect on the applicant's management honesty or financial integrity.

Primary Application Certifications

All primary applicants must submit a completed Form CD–511, ''Certifications Regarding Debarment, Suspension and Other Responsibility Matters: Drug-Free Workplace Requirements and Lobbying,'' and the following explanations are hereby provided:

i. Nonprocurement Debarment and Suspension

Prospective participants (as defined at 15 CFR Part 26, Section 105) are subject to 15 CFR Part 26, ''Nonprocurement Debarment and Suspension'' and the related section of the certification form prescribed above applies;

ii. Drug-Free Workplace

Grantees (as defined at 15 CFR Part 26, Section 605) are subject to 15 CFR Part 26, Subpart F, ''Governmentwide Requirements for Drug-Free Workplace (Grants)'' and the related section of the certification form prescribed above applies;

iii. Anti-Lobbying

Persons (as defined at 15 CFR Part 28, Section 105) are subject to the lobbying provisions of 31 U.S.C. 1352, ''Limitation on use of appropriated funds to influence certain Federal contracting and financial transactions,'' and the lobbying section of the certification form prescribed above applies to applications/bids for grants, cooperative agreements, and contracts for more than $100,000, and loans and loan guarantees for more than $150,000; and

iv Anti-Lobbying Disclosures

Any applicant that has paid or will pay for lobbying using any funds must submit an SF–LLL, ''Disclosure of Lobbying Activities,'' as required under 15 CFR Part 28, Appendix B.

Lower Tier Certifications

Recipients shall require applicants/bidders for subgrants, contracts, subcontracts, or other lower tier covered transactions at any tier under the award to submit, if applicable, a completed Form CD–513, ''Certifications Regarding Debarment, Suspension, Ineligibility and Voluntary Exclusion-Lower Tier Covered Transactions and Lobbying'' and disclosure form, SF–LLL, ''Disclosure of Lobbying Activities.'' Form CD–512 is intended for the use of recipients and should not be transmitted to Department of Commerce. SF–LLL submitted by any tier recipient or subrecipient should be submitted to Department of Commerce in accordance with the instructions contained in the award document.

False Statements

A false statement on an application is grounds for denial or termination of funds and grounds for possible punishment by a fine or imprisonment as provided in 18 U.S.C. 1001.

Intergovernmental Review

Applications under this program are subject to Executive Order 12372, ''Intergovernmental Review of Federal Programs.''

Classification

Prior notice and an opportunity for public comments are not required by the Administrative Procedure Act or any other law for this notice concerning grants, benefits, and contracts. Therefore, a regulatory flexibility analysis is not required for purposes of the Regulatory Flexibility Act.

This action has been determined to be not significant for purposes of E.O. 12866.

This document contains collection of information requirements subject to the Paperwork Reduction Act. The ''Application for Dean John A. Knauss Marine Policy Fellowships'' has been approved by OMB under control number 0648–0362 with average responses estimated to take two hours. This estimate includes the time for reviewing instructions, searching existing data sources, gathering and maintaining the data needed, and completing and reviewing the collection of information. Send comments on this estimate or any other aspect of this collection to National Sea Grant College Program, R/SG, NOAA, 1315 East-West Highway, Silver Spring, MD 20910 (Attention: Francis S. Schuler) and to the Office of Information and Regulatory Affairs, Office of Management and Budget, Washington, DC 20503 (Attention: NOAA Desk Officer). Notwithstanding any other provision of the law, no person is required to respond to, nor shall any person be subject to a penalty for failure to comply with, a collection of information subject to the requirements of the Paperwork Reduction Act, unless that collection of information displays a currently valid OMB Control Number.

Dated: February 25, 1999.

Louisa Koch,

Deputy Assistant Administrator, Office of Oceanic and Atmospheric Research, National Oceanic and Atmospheric Administration.

[FR Doc. 99–5115 Filed 3–4–99; 8:45 am]

BILLING CODE 3510–KA–M

DEPARTMENT OF COMMERCE

National Oceanic and Atmospheric Administration

[Docket No. 990125030–9030–01]

RIN 0648–ZA56

National Oyster Disease Research Program and Gulf Oyster Industry Initiative: Request for Proposals for FY 1999

AGENCY: National Sea Grant College Program, National Oceanic and Atmospheric Administration, Department of Commerce.

ACTION: Notice of request for proposals.

SUMMARY: The purpose of this notice is to advise the public that the National Sea Grant College Program (Sea Grant) is entertaining preliminary proposals and subsequently full proposals to participate in innovative research, outreach and demonstration projects in two separate competitions: one to continue the National Oyster Disease Research Program (ODRP) and one to continue the Gulf Oyster Industry Program (GOIP). In FY 1999 and 2000, Sea Grant expects to make available about $1,475,000 per year to support the National Oyster Disease Research Program through projects that focus on diseases that are impacting the oyster populations of the US, and about $930,000 per year to support the Gulf Oyster Industry Program through projects that focus on the oyster industry problems of the Gulf Coast with special emphasis on the human health considerations within that industry. Matching funds equivalent to a minimum of 50% of the Federal request must be provided for each project. Successful projects will be selected through national competitions.

DATES: Preliminary proposals must be submitted before 5 pm (local time) on April 5, 1999 to the nearest state Sea Grant College Program or the National Sea Grant Office (NSGO). After evaluation at the NSGO, some proposers will be encouraged to prepare full proposals, which must be submitted before 5 pm (local time) on May 27, 1999 to the nearest state Sea Grant College Program or the NSGO.

ADDRESSES: Investigators located in states with Sea Grant Programs must submit their preliminary proposals and full proposals through those programs. The addresses of the Sea Grant College Program directors may be found on Sea Grant's home page (http://www.mdsg.umd.edu/NSGO/index.html) or may also be obtained by contacting the Program Manager at the National Sea Grant Office (see below). Investigators from non-Sea Grant states may submit their preliminary proposals and proposals directly to the National Sea Grant Office at: National Sea Grant College Program. R/SG, Attn: Oyster Disease and Gulf Oyster Industry Competition, Room 11838, NOAA, 1315 East-West Highway, Silver Spring, MD 20910.

FOR FURTHER INFORMATION CONTACT: James P. McVey, Program Director for Aquaculture, National Sea Grant College Program, R/SG, NOAA, 1315 East-West Highway, Silver Spring, MD 20910, or Mary Robinson, Secretary, National Sea Grant Office, 301–713–2451, facsimile 301–713–0799.

SUPPLEMENTARY INFORMATION:

I. Program Authority

Authority: 33 U.S.C. 1121–1131.

(Catalog of Federal Assistance Number: 11.417, Sea Grant Support.)

II. Program Description

Background

National Oyster Disease Research Program: For more than two decades, oyster populations in the Chesapeake Bay and mid-Atlantic area have been increasingly battered by Dermo and MSX, two parasitic diseases for which there is no known remedy. In the northeast, a new and as yet unidentified pathogen, called Juvenile Oyster Disease (JOD), has been taking a toll in hatcheries. On the west coast, the Pacific Oyster has been subjected to puzzling summer mortalities.

The continuing decline of oyster stocks has been a catalyst for federal support of the Oyster Disease Research Program, a far-reaching effort by the National Oceanic and Atmospheric Administration to support innovative research that will lead to improved techniques for combating oyster disease. The Program began in 1990 with oversight by the NOAA National Marine Fisheries Service and its Chesapeake Bay Office, and is now administered by the National Sea Grant College, Program.

Through competitive proposals each year, the Oyster Disease Research Program is supporting efforts to develop:

(1) Optimal strategies for managing around disease.

(2) Molecular tools to better monitor the onset and presence of disease.

(3) Better understanding of the processes of parasitic infection.

(4) Improved understanding of the oyster's immune system.

(5) Hatchery techniques for producing disease-resistant strains.

This extensive program of ongoing research, coupled with outreach and management efforts, aims to better serve the restoration of health populations of oysters in the nation's coastal waters.

Gulf Oyster Industry Program: The Gulf Oyster Industry Program is a long term, research-based program aimed at assisting the oyster industry in states adjoining the Gulf of Mexico to achieve full economic recovery and sustainable oyster production. This program will foster the participation of highly qualified academic researchers with industry and management agency personnel in a organized, comprehensive search for practical solutions to the most pressing problems of the Gulf oyster industry, including those relating to Vibrio vulnificus, a human pathogen, and other human health risks associated with raw molluscan shellfish.

Funding Availability and Priorities

The National Sea Grant College Program encourages proposals that address one of the following two program areas:

(1) National Oyster Disease Research Program (ODRP)

The official vision statement for the program is ''to provide, through a coordinated research program, the technological basis for overcoming diseases which currently limit oyster production in the United States''. Even though ODRP emphasis is on diseases associated with the American oyster, proposals addressing disease problems of other oyster species will be considered as long as they relate to the priorities identified below:

In response to the progress reports presented at the special session on the ''Oyster Disease Research Program—Progress to Date'', during the International Shellfish Restoration Conference, 21–23 November, 1996, the ODRP Steering Committee recommended that future announcements encourage partnerships for the transfer of basic research findings and new technology where opportunity exists. These partnerships may consist of, but will not be limited to, such activities as involvement of private sector and extension/outreach in the implementation of research results and trials of diagnostic methods, or commercial development of tools for oyster disease management. Even though this Announcement is encouraging projects of this type, the Steering Committee recognizes that some of the best work being done on oyster disease involves basic research, which may not be ready for application, but which still contributes to a greater understanding of the fundamental nature of oyster diseases. Sea Grant will continue to support this basic research, while providing opportunity for those researchers that have already developed useful applications to receive consideration in the proposal process. We have also provided more detail on the results of ongoing research on the National Sea Grant Homepage on the World Wide Web at http://www.mdsg.umd.edu.

Another consideration identified by the Steering Committee involves creating opportunities for larger-scale efforts that build on existing progress where it would be meaningful. The intent of projects that would fall into this category should be research hypothesis testing, but not long-term monitoring. The committee felt that this is an avenue for reaching the next step programmatically, and would encourage researchers to build the appropriate partnerships and linkages, especially with concerned State agencies.

Primary consideration for funding will be given to proposals which address the specific priorities listed below. These priorities, originally determined at a national workshop in January, 1995 and further refined at the Oyster Disease Research Program session during the International Shellfish Restoration Conference in 1996, are not listed in any implied order of importance.

(1) Parasite life cycles and the dynamics and mechanisms of transmission—investigations of selected aspects of the life cycles of oyster pathogens, especially MSX and Perkinsus, and the dynamics/mechanisms of disease transmission among host organisms.

(2) Host-parasite interactions—investigations which: determine how pathogens avoid host defense mechanisms; biochemically characterize Perkinsus strains; determine factors which confer virulence to Perkinsus strains; determine mechanisms of infection/entry into the host; or compare disease processes in oyster species.

(3) Mechanisms of disease resistance—continued emphasis is placed on studies concerning cellular/molecular mechanisms of disease

infection and resistance in Crassostrea spp. and studies which determine the mechanisms of immune response in oysters. In addition, analysis of host defense factors, the development of molecular markers of disease and stress resistance, the development of immuno-stimulants, the application of chemo-therapeutics, and the identification of pathogen virulence and resistance mechanisms are needed; as are studies comparing resistance among diploid and polyploid oysters.

(4) Development and application of diagnostic methods for all oyster diseases—investigations which lead to the development and application of molecular techniques for disease diagnosis, and those which develop rapid field diagnostic methods are high priority.

(5) Environmental influences on disease processes—proposals which address the influence of biotic and abiotic factors upon host-parasite interactions are high priority. Also included are studies of the effects of eutrophication upon disease dynamics, basic physiological and adaptation processes in both hosts and parasites, the mechanisms of the summer kill phenomenon, relationships between disease progression and climate, and the eco-physiology of Perkinsus.

(6) Taxonomy, phylogeny and population studies of both hosts and parasites—emphasis continues on studies of variations in population susceptibility, host resistance and pathogen virulence. Also needed are investigations of the genetic structure of both hosts and parasites.

(7) Development and application of selective breeding strategies—We are seeking studies which develop molecular/biochemical markers for breeding resistance into oysters, as well as genome analysis and gene transfer techniques related to disease resistance. A priority in this category is an evaluation of non-native oyster species genomes with regard to disease resistance under aquaculture conditions.

(8) Development and testing of geographic and mathematical models to improve understanding of disease dynamics—the highest priority topic in this category is the need for a dual disease model to examine the effects of environmental change upon oyster populations. A basic model now exists and new work in this area must clearly state how additional investment will take us to an even better level of prediction.

(9) Design, apply and evaluate disease management strategies for enhanced natural and aquaculture production and prediction (i.e. advanced forecasting)—There are many issues related to establishment of recovery areas, remote setting, use of natural seed, bottom cleaning before setting, cultch type, etc. which should be addressed as management priorities.

Approximately $1,475,000 in FY 1999 funding is available for this competition and additional funds are expected but not assured for FY 2000. Therefore, two-year projects will be considered. Funding will be on an annual basis, with renewal depending upon satisfactory demonstration of progress and availability of funds.

(2) Gulf Oyster Industry Program

The Gulf Oyster Industry Program was created as a result of information provided by Gulf oyster industry leaders, state resource managers, and academic researchers spanning the five-state Gulf region. Specific needs identified by these individuals were subsumed into 12 concise issue statements as a result of a workshop held in New Orleans, Louisiana in 1997. This list of research and extension needs and proposed responses was presented to a select Industry Advisory Panel at the Gulf Oyster Industry Program Workshop conducted in New Orleans, La., on February 28, 1998, and the group was asked to establish research priorities based on that framework. Through an ensuing discussion, high-priority issues were delineated as shown below:

(1) Human pathogenic organisms—Human pathogens associated with raw shellfish are perceived as a problem for consumers thus affecting market sales. This RFP seeks proposals that will develop means of treating oyster shell stock and oyster meats to eliminate Vibrio vulnificus, and to develop improved methods for depurating oysters such as the use of friendly bacteria or other water treatments.

(2) Consumer attitudes and preferences—Public and consumer opinions are very important to the strengthening of the Gulf oyster industry. This RFP seeks proposals that will determine oyster consumer demographics, consumption patterns, attitudes and preferences. Development and testing of new oyster products to improve marketing is also high priority.

(3) Oyster diseases—Oyster diseases are having a major impact on Gulf Coast Oyster stocks and for the most part this topic will be covered under the Oyster Disease topic in this solicitation. However, oyster disease research specific to the Gulf Coast will be considered in this solicitation.

(4) Coastal restoration and freshwater diversions—These activities have impacted the Gulf oyster industry both positively and negatively. Sea Grant seeks proposals that will educate oystermen, public officials, and citizens regarding the economic role of the oyster industry and economic costs of displacing and relocating oyster bedding operations. Proposals to develop and test freshwater diversion and oyster farming strategies that reduce fouling of oysters by hooked mussels are also high priority.

(5) Labor and mechanization—Production technology issues are becoming more important as the traditional labor base that supports harvesting, and processing declines. Proposals treating this problem with special attention to cost effective mechanized approaches to reduce labor costs in all areas of the industry are being sought.

(6) Genetics and oyster hatchery technology—These technologies are needed to develop cost-effective hatchery/nursery operations to augment wild oyster production with specialized strains. The development of triploid oysters for the Gulf Coast, development of disease resistant oysters, enhancements or immune systems of juvenile oysters through vaccinations are examples of needed technology.

(7) Hooked mussel fouling—Hooked mussel fouling on oyster growing areas has drastically increased harvesting costs by requiring laborious removal of mussels from marketable oysters or transplanting to higher salinity areas. Research on controlling or managing around hooked mussel fouling is of high priority.

(8) Harmful algal blooms/red tide—Rapid and more sensitive detection methods for harmful algal species and management around algal bloom outbreaks are high priority research areas.

(9) Point-source pollution—Specific point-sources of pollution negatively impact certain potential oyster growing waters, with consequent public health risks and loss of revenue to growers. Studies on identifying sources of pollution and restoration of water quality in coastal areas are of high priority.

(10) Black drum predation—Development of novel methods of deterring black drum fish predation on oysters in context with present fishery regulations has been identified as an important area for research.

(11) Economic impacts of regulatory action—The oyster industry is impacted by media comments and regulatory actions that change perceptions about

oyster products. Studies to determine the effect of inaccurate media reporting on sales, analyze the effect of de-listing of a processor or state from the Interstate Shippers List, and the impact of product disparagement on markets are appropriate for this competition.

Primary consideration for funding will be given to proposals that address the topics listed above. Although the Industry Advisory Panel has indicated a clear preference for projects with a technological focus, more fundamental scientific studies may be supported when clear linkages between scientific findings and their incorporation into technological advances and management practices can be demonstrated.

Approximately $930,000 in funding for FY 1999 is expected to be available for competitive project awards. A similar amount is expected for FY 2000. Therefore, two-year projects will be considered. Funding will be on an annual basis, with renewal depending upon satisfactory demonstration of progress and availability of funds. State Program Directors should allow enough time in their process to pass the proposals to the National Sea Grant Office by the dates indicated above.

III. Eligibility

Applications requesting support under both of major topics listed in this call for proposals are open to all non-federal scientists and institutions. For the Oyster Disease Research topic National Marine Fishery Services personnel may participate in joint efforts with non-federal persons or groups in these projects as long as these non-federal persons or groups are the principal investigators and have applied and successfully competed for oyster disease research funds through the process outlined in this announcement. Investigators submitting proposals in response to this announcement are strongly encouraged to develop inter-institutional, inter-disciplinary research teams in the form of single, integrated proposals or as individual proposals that are clearly linked together. Such collaborative efforts will be factored into the final funding decision.

IV. Evaluation Criteria

The evaluation criteria for proposals submitted for support under the Oyster Disease Research Program are as follows:

(1) Impact of proposed project (35%)—Significance of the ODRP problem that is being addressed; the level of expected improvement of oyster industry production or technology as a result of funding or the need for this activity as a necessary step toward having a positive impact on future improvement of technology or production; the degree of collaboration of this activity with other ongoing or proposed activities.

(2) Scientific or professional merit (30%)—Degree to which the activity will advance the state of the science or state-of-the-art methods.

(3) Field-scale demonstration (5%)—Degree to which industry and state oyster managers are using or will use technology or products developed through applied research under actual field conditions.

(4) User relationships (15%)—Degree to which the potential users of the results have been involved in the planning of the activity, will be involved in the execution of the activity and/or are providing matching funds.

(5) Innovativeness (10%)—Degree to which new approaches to solving problems and exploiting opportunities in oyster disease research, or in public outreach on such issues will be employed, or the degree to which the activity will focus on new types of important or potentially important resources and issues.

(6) Qualifications and past record of investigators (5%)—Degree to which investigators are qualified by education, training, and/or experience to execute the proposed activity; and record of achievement with previous funding.

The evaluation criteria for proposals submitted for support under the Gulf Coast Oyster Industry Initiative are as follows:

(1) Impact of proposed project (40%)—Significance of the GCOIP that will be addressed; the effect this activity will have on the improvement of oyster industry production or technology as a result of funding or the need for this activity as a necessary step toward having a positive impact on future improvement of technology or production; the degree of collaboration of this activity with other ongoing or proposed activities.

(2) Field-scale demonstration (10%)—Degree to which industry and state oyster managers are using or will use technology or products developed through applied research under actual field or industry conditions.

(3) Scientific or professional merit (20%)—Degree to which the activity will advance the state of the science or discipline through use and extension of state-of-the-art methods.

(4) User relationships (15%)—Degree to which potential users of the results of the proposed activity have been involved in planning the activity, will be involved in the execution of the activity, and/or are providing matching funds.

(5) Innovativeness (10%)—Degree to which new approaches to solving problems and exploiting opportunities in Gulf Coast Oyster Industry issues, or in public outreach on such issues will be employed, or the degree to which the activity will focus on new types of important or potentially important resources and issues.

(6) Qualifications and past record of investigators (5%)—Degree to which investigators are qualified by education, training, and/or experience to execute the proposed activity; and record of achievement with previous funding.

V. Selection Procedures

Preliminary proposals will be evaluated by the Steering Committees that have been established for each of the oyster programs during a meeting to be held at the most convenient location for participation by the committee members. The Gulf Oyster Industry Steering Committee is composed primarily of industry representatives and proposers should keep that in mind when preparing preliminary proposals. The Steering Committee will evaluate the project's appropriateness according to the list of priorities listed above, and considering the projects currently underway in the Program; a list of those projects already funded is available from the National Sea Grant Office. The Steering Committee will make individual recommendations to the Director of the NSGO regarding which preliminary proposals may be suitable for further consideration. On the basis of the panel's recommendations, the Director of the NSGO will advise proposers whether or not the submission of full proposals is encouraged. Invitation to submit a full proposal does not constitute an indication that the proposal will be funded. Interested parties who are not invited to submit full proposals will not be precluded from submitting full proposals if they have submitted a preliminary proposal in accordance with the procedures described below.

Full proposals will be received at the individual state Sea Grant Programs or at the National Sea Grant Office, if from a non-Sea Grant State, and sent to peer reviewers for written reviews. The National Sea Grant Office will obtain the written reviews for proposals from non-Sea Grant states. Complete full proposals and their written reviews will be sent by the state Sea Grant programs to the National Sea Grant Office to be ranked in accordance with the assigned weights of the above evaluation criteria by one of two independent peer review

panels consisting of government, academic, and industry experts; one panel will review the Oyster Disease Research Program and a second panel will review the Gulf Oyster Industry Program. The panel members of each panel will provide individual evaluations on each proposal, but there will be no consensus advice. Their recommendations and evaluations will be considered by the Sea Grant Program Managers in the final selection. Only those proposals rated by the panel as either Excellent, Very Good or Good will be eligible for funding. For those proposals, the Sea Grant Program Managers will: (a) Ascertain which proposals best meet the program priorities, and do not substantially duplicate other projects that are currently funded by NOAA or other federal agencies, hence, awards may not necessarily be made to the highest-scored proposals; (b) select the proposals to be funded; (c) determine which components of the selected projects will be funded; (d) determine the total duration of funding for each proposal; and (e) determine the amount of funds available for each proposal. Investigators may be asked to modify objectives, work plans, or budgets prior to approval of the award. Subsequent grant administration procedures will be in accordance with current NOAA grants procedures. A summary statement of the scientific review by the peer panel will be provided to each applicant.

VI. Instructions for Application

Timetable

April 5, 1999, 5 pm (local time—Preliminary proposals due at state Sea Grant Program.

April 8, 1999, 5 pm EST—Preliminary proposals due at NSGO.

May 27, 1999, 5 pm (local time)—Full proposals due at state Sea Grant Program.

July 7, 1999, 5 pm EST—Full proposals due at NSGO.

October 1, 1999 (approximate)—Funds awarded to selected recipients; projects begin.

General Guidelines

The ideal proposal attacks a well-defined problem that will be or is a significant societal issue. The organization or people whose task it will be to make related decisions, or who will be able to make specific use of the projects results, will have been identified and contacted by the Principal Investigator(s). The project will show an understanding of what constitutes necessary and sufficient information for responsible decision-making or for applied use, and will show how that information will be provided by the proposed activity, or in concert with other planned activities.

Research projects are expected to have: a rigorous hypothesis-based scientific work plan, or a well-defined, logical approach to address an engineering problem; a strong rationale for the proposed research; and a clear and established relationship with the ultimate users of the information. Research undertaken jointly with industry, business, or other agencies with interest in the problem will be seen as being meritorious. Their contribution to the research may be in the form of collaboration, in-kind services, or dollar support. Projects that are solely monitoring efforts are not appropriate for funding.

Applications must reflect the total budget necessary to accomplish the project, and be matched by at least one dollar of non-federal funds for each two dollars of federal funds. The appropriateness of all cost-sharing will be determined on the basis of guidance provided in applicable Federal cost principles. The applicants will be bound by the percentage of cost sharing reflected in the grant award.

What to Submit

Preliminary Proposal Guidelines

To prevent the expenditure of effort that may not be successful, proposers must first submit preliminary proposals. Preliminary proposals must be single- or double-spaced, typewritten in at least a 10-point font, and printed on metric A4 (210 mm x 297 mm) or 8½″ x 11″ paper. The following information should be included:

(1) Signed title page: The title page should be signed by the Principal Investigator and should clearly identify the program area being addressed by starting the project title with either ''Oyster Disease Research Program'' or ''Gulf Oyster Industry Initiative.'' Principal Investigators and collaborators should be identified by affiliation and contact information. The total amount of Federal funds and matching funds being requested should be listed for each budget period, as well as the source of the matching funds. Preliminary proposals must include matching funds equivalent to at least 50% of the Federal funds requested.

(2) A concise (2-page limit) description of the project, its expected output or products, the anticipated users of the information, and its anticipated impact. Proposers may wish to use the Evaluation Criteria for additional guidance in preparing the preliminary proposals.

(3) Resumes (1-page limit) of the Principal Investigators.

(4) Proposers are encouraged (but not required) to include a separate page suggesting reviewers that the proposers believe are especially well qualified to review the proposal. Proposers may also designate persons they would prefer not review the proposal, indicating why. These suggestions will be considered during the review process.

Three copies of the preliminary proposals must be submitted to the state Sea Grant Program Director or, for investigators in non-Sea Grant states, directly to the National Sea Grant Office (NSGO) before 5 pm (local time) on April 5, 1999. Preliminary proposals submitted to state Sea Grant Programs will be forwarded, along with a cover letter, to Dr. James McVey, National Oyster Disease and Gulf Coast Oyster Industry Coordinator, at the address below so as to reach the NSGO on or before 5 pm on April 8, 1999.

Full Proposal Guidelines

Each full proposal should include the items listed below. All pages should be single- or double-spaced, typewritten in at least a 10-point font, and printed on metric A4 (210 mm x 297 mm) or 8½″ x 11″ paper. Brevity will assist reviewers and program staff in dealing effectively with proposals. Therefore, the Project Description may not exceed 15 pages. Tables and visual materials, including charts, graphs, maps, photographs and other pictorial presentations are included in the 15-page limitation. Conformance to the 15-page limitation will be strictly enforced. All information needed for review of the proposal should be included in the main text; no appendices are permitted.

(1) Signed title page: The title page should be signed by the Principal Investigator and the institutional representative and should clearly identify the program area being addressed by starting the project title with either ''Oyster Disease Research Program'' or ''Gulf Oyster Industry Initiative'', as appropriate. The Principal Investigator and institutional representative should be identified by full name, title, organization, telephone number and address. The total amount of Federal funds and matching funds being requested should be listed for each budget period.

(2) Project summary: This information is very important. Prior to attending the peer review panel meetings, some of the panelists may read only the project summary. Therefore, it is critical that the project summary accurately describe

the research being proposed and convey all essential elements of the research. The project summary should include: 1. Title: Use the exact title as it appears in the rest of the application. 2. Investigators: List the names and affiliations of each investigator who will significantly contribute to the project. Start with the Principal Investigator. 3. Funding request for each year of the project, including matching funds if appropriate. 4. Project Period: Start and completion dates. Proposals should request a start date of October 1, 1999. 5. Project Summary: This should include the rationale for the project, the scientific or technical objectives and/or hypotheses to be tested, and a brief summary of work to be completed.

(3) Project description (15-page limit):

(a) Introduction/Background/Justification: Subjects that the investigator(s) may wish to include in this section are: (i) current state of knowledge; (ii) contributions that the study will make to the particular discipline or subject area; and (iii) contributions the study will make toward addressing the problems of Oyster Disease Research Program of Gulf Oyster Industry issues;

(b) Research or technical plan: (i) Objectives to be achieved, hypotheses to be tested; (ii) Experimental design and statistical analysis to be used; (iii) Plan of work-discuss how stated project objectives will be achieved; and (iv) Role of project personnel.

(c) Output: Describe the project outputs that will enhance the Nation's ability to improve the status of oysters and the oyster industry.

(d) Coordination with other program elements: Describe any coordination with other agency programs or ongoing research efforts. Describe any other proposals that are essential to the success of this proposal.

(e) References and literature citations: Should be included but will not be counted in the 15 page project description limit.

(4) Budget and budget justification: There should be a separate budget for each year of the project as well as a cumulative annual budget for the entire project. Applicants are encouraged to use the Sea Grant Budget Form 90–4, but may use their own form as long as it provides the same information as the Sea Grant form. Subcontracts should have a separate budget page. Matching funds must be indicated; failure to provide adequate matching funds will result in the proposal being rejected without review. Each annual budget should include a separate budget justification page that itemizes all budget items in sufficient detail to enable reviewers to evaluate the appropriateness of the funding requested. Please pay special attention to any travel, supply or equipment budgets and provide details. Regardless of any approved indirect cost rate applicable to the award, the maximum dollar amount of allocable indirect costs for which the Department of Commerce will reimburse the Recipient shall be the lesser of: (a) The Federal share of the total allocable indirect costs of the award based on the negotiated rate with the cognizant Federal agency as established by audit or negotiation; or (b) The line item amount for the Federal share of indirect costs contained in the approved budget of the award.

(5) Current and pending support: Applicants must provide information on all current and pending support for ongoing projects and proposals, including subsequent funding in the case of continuing grants. All current project support from whatever source (e.g., Federal, State, or local government agencies, private foundations, industrial or other commercial organizations) must be listed. The proposed project and all other projects or activities requiring a portion of time of the principal investigator and other senior personnel should be included, even if they receive no Federal salary support from the project(s). The number of person-months per year to be devoted to the projects must be stated, regardless of source of support. Similar information must be provided for all proposals already submitted or submitted concurrently to other possible sponsors, including those within NOAA.

(6) Vitae (2 pages maximum per investigator)

(7) Standard application forms: Applicants may obtain all required application forms through the World Wide Web at http://www.mdsg.umd.edu/NSGO/research/rfp/index.html, from the state Sea Grant Programs or from Dr. James P. McVey at the National Sea Grant Office (phone: 301–713–2451 x160 or e-mail:jim.mcvey@noaa.gov). The following forms must be included:

(a) Standard Forms 424, Application for Federal Assistance, 424A, Budget Information—Non-Construction Programs; and 424B, Assurances—Non-Construction Programs, (Rev 4–88). Applications should clearly identify the program area being addressed by starting the project title with either as appropriate. Please note that both the Principal Investigator and an administrative contact should be identified in Sections 5 of the SF424. For Section 10, applicants for the National Oyster Disease Research Program and Gulf Oyster Industry Initiative program areas should enter ''11.417'' for the CFDA Number and ''Sea Grant Support'' for the title. The form must contain the original signature of an authorized representative of the applying institution.

(b) Primary applicant certifications. All primary applicants must submit a completed Form CD–511, ''Certifications Regarding Debarment, Suspension and Other Responsibility Matters; Drug-Free Workplace Requirements and Lobbying,'' and the following explanations are hereby provided:

(i) Nonprocurement debarment and suspension. Prospective participants (as defined as 15 CFR Part 26, Section 105) are subject to 15 CFR Part 26, ''Nonprocurement Debarment and Suspension'' and the related section of the certification form prescribed above applies;

(ii) Drug-free workplace. Grantees (as defined at 15 CFR Part 26, Section 605) are subject to 15 CFR Part 26, Subpart F, ''Government-wide Requirements for Drug-Free Workplace (Grants)'' and the related section of the certification form prescribed above applies;

(iii) Anti-Lobbying. Persons (as defined at 15 CFR Part 28, Section 105) are subject to the lobbying provisions of 31 U.S.C. 1352, ''Limitation on use of appropriated funds to influence certain Federal contracting and financial transactions,'' and the lobbying section of the certification form prescribed above applies to applications/bids for grants, cooperative agreements, and contracts for more than $100,000, and loans and loan guarantees for more than $150,000, or the single family maximum mortgage limit for affected programs, whichever is greater; and

(iv) Anti-Lobbying disclosures. Any applicant that has paid or will pay for lobbying using any funds must submit an SF–LLL, ''Disclosure of Lobbying Activities,'' as required under 15 CFR Part 28, Appendix B.

(c) Lower tier certifications. Recipients shall require applicants/bidders for subgrants, contracts, subcontracts, or other lower tier covered transactions at any tier under the award to submit, if applicable, a completed Form CD–512, ''Certifications Regarding Debarment, Suspension, Ineligibility and Voluntary Exclusion—Lower Tier Covered Transactions and Lobbying'' and disclosure form, SF–LLL, ''Disclosure of Lobbying Activities.'' Form CD–512 is intended for the use of recipients and should not be transmitted to the Department of Commerce (DOC). SF–LLL submitted by any tier recipient or subrecipient should be submitted to

DOC in accordance with the instructions contained in the award document.

VII. How to Submit

Preliminary proposals and proposals must be submitted to the state Sea Grant Programs or, for investigators in non-Sea Grant states, directly to the National Sea Grant Office (NSGO), according to the schedule outlined above. Although investigators are not required to submit more than 3 copies of either preproposals or full proposals, the normal review process requires 10 copies. Investigators are encouraged to submit sufficient copies for the full review process if they wish all reviewers to receive color, usually sized (not 8.5 x 11″), or otherwise unusual materials submitted as part of the proposal. Only three copies of the Federally required forms are needed. The addresses of the Sea Grant College Program directors may be found on Sea Grant's World Wide Web home page (http://www.mdsg.umd.edu/NSGO/index.html) or may also be obtained by contacting the Program Manager, Dr. James P. McVey, at the National Sea Grant Office (phone: 301–713–2451 x160 or e-mail: jim.mcvey@noaa.gov). Preproposals and proposals sent to the National Sea Grant Office should be addressed: National Sea Grant Office, R/SG, Attn: National Oyster Disease and Gulf Coast Oyster Industry Coordinator, NOAA, Room 11877, 1315 East-West Highway, Silver Spring, MD 20910 (phone 301–713–2435 for express mail applications).

Applications received after the deadline and applications that deviate from the format described above will be returned to the sender without review. Facsimile transmissions and electronic mail submission of applications will not be accepted.

VIII. Other Requirements

(1) Federal Policies and Procedures—Recipients and subrecipients are subject to all Federal laws and Federal and Department of Commerce (DOC) policies, regulations, and procedures applicable to Federal financial assistance awards.

(2) Past Performance—Unsatisfactory performance under prior Federal awards may result in an application not being considered for funding.

(3) Preaward Activities—If applicants incur any costs prior to an award being made, they do so solely at their own risk of not being reimbursed by the Government. Notwithstanding any verbal or written assurance that may have been received, there is no obligation on the part of DOC to cover preaward costs.

(4) No Obligation for Future Funding—If an application is selected for funding, DOC has no obligation to provide any additional future funding in connection with that award. Renewal of an award to increase funding or extend the period of performance is at the total discretion of DOC.

(5) Delinquent Federal Debts—No award of Federal funds shall be made to an applicant who has an outstanding delinquent Federal debt until either:

(a) The delinquent account is paid in full,

(b) A negotiated repayment schedule is established and at least one payment is received, or

(c) Other arrangements satisfactory to DOC are made.

(6) Name Check Review—All non-profit and for-profit applicants are subject to a name check review process. Name checks are intended to reveal if any key individuals associated with the applicant have been convicted of or are presently facing criminal charges such as fraud, theft, perjury, or other matters which significantly reflect on the applicant's management honesty or financial integrity.

(7) False Statements—A false statement on an application is grounds for denial or termination of funds and grounds for possible punishment by a fine or imprisonment as provided in 18 U.S.C. 1001.

(8) Intergovernmental Review—Applications for support from the National Sea Grant College Program are not subject to Executive Order 12372, ''Intergovernmental Review of Federal Programs.

(9) Purchase of American-Made Equipment and Products—Applicants are hereby notified that they will be encouraged to the greatest extent practicable, to purchase American-made equipment and products with funding provided under this program.

Classification

Prior notice and an opportunity for public comments are not required by the Administrative Procedure Act or any other law for this notice concerning grants, benefits, and contracts. Therefore, a regulatory flexibility analysis is not required for purposes of the Regulatory Flexibility Act.

This action has been determined to be not significant for purposes of E.O. 12866.

This notice contains collection of information requirements subject to the Paperwork Reduction Act. The Sea Grant Budget Form and Standard Forms 424, 424a and 424b have been approved under control numbers 0648–0362, 0348–0043, 0348–0044, and 0348–0040 with average responses estimated to take 15, 45, 180, and 15 minutes, respectively. These estimates include the time for reviewing instructions, searching existing data sources, gathering and maintaining the data needed, and completing and reviewing the collection of information. Send comments on these estimates or any other aspect of these collections to National Sea Grant College Program, R/SG, NOAA, 1315 East-West Highway, Silver Spring, MD 20910 (Attention: Francis S. Schuler) and to the Office of Information and Regulatory Affairs, Office of Management and Budget, Washington, DC 20503 (Attention: NOAA Desk Officer). Notwithstanding any other provision of the law, no person is required to respond to, nor shall any person be subject to a penalty for failure to comply with, a collection of information subject to the requirements of the Paperwork Reduction Act, unless that collection of information displays a currently valid OMB Control Number.

Dated: February 25, 1999.

Louisa Koch,

Deputy Assistant Administrator, Office of Oceanic and Atmospheric Research, National Oceanic and Atmospheric Administration.

[FR Doc. 99–5116 Filed 3–4–99; 8:45 am]

BILLING CODE 3510–KA–M

DEPARTMENT OF COMMERCE

National Oceanic and Atmospheric Administration

[Docket No. 990125031–9031–01]

RIN 0648–ZA57

Sea Grant Industry Fellows Programs: Request for Proposals for FY 1999

AGENCY: National Sea Grant College Program, National Oceanic and Atmospheric Administration, Department of Commerce.

ACTION: Notice of request for proposals.

SUMMARY: The purpose of this notice is to advise the public that the National Sea Grant College Program (Sea Grant) is entertaining proposals for the Industry Fellowship program to fulfill its broad educational responsibilities and to strengthen ties between academia and industry. With required matching funds from private industrial sponsors, Sea Grant expects to support three new Industry Fellows in FY 1999. Each fellow will be a graduate student selected through national competition, and will be known as a Company Name/

Sea Grant Industry Fellow. Proposals must be submitted by academic institutions who have identified a graduate fellow and an industrial sponsor who will provide matching funds.

DATES: Proposals must be submitted before 5 pm (local time) on May 27, 1999 to the nearest state Sea Grant Program.

ADDRESSES: Proposals must be submitted through the nearest state Sea Grant Program. The addresses of the Sea Grant College Program directors may be found on Sea Grant's home page (http://www.mdsg.umd.edu/NSGO)/index.html) or may also be obtained by contacting the Program Manager at the National Sea Grant Office (see below).

FOR FURTHER INFORMATION CONTACT: Dr. Vijay G. Panchang, Program Manager, National Sea Grant College Program, R/SG, NOAA, 1315 East-West Highway, Silver Spring, MD 20910. Tel. (301) 713–2435 ext. 142; e-mail: Vijay.Panchang@noaa.gov.

SUPPLEMENTARY INFORMATION:

I. Program Authority

Authority: 33 U.S.C. 1127(a).

(Catalog of Federal Domestic Assistance Number: 11.417, Sea Grant Support.)

II. Program Description

Background

Today's global economy is putting unprecedented demands on the US industrial community for innovation and new technology. This situation presents challenges to industry and universities to develop new paradigms leading to more efficient utilization of available human, fiscal, and technical resources. This can be accomplished through the recruitment of graduates trained in technologies relevant to an industry's future and the creation of opportunities for collaboration between industrial and academic scientists and engineers. Academically well-trained students with exposure to advanced industrial issues constitute a critical component of success in that endeavor.

To strengthen ties between academia and industry, Sea Grant developed the Industry Fellows Program in 1995. With required matching funds from private industrial sponsors, Sea Grant expects to support three new Industry Fellows in FY 1999. Each fellow will be a graduate student selected through national competition, and will be known as a Company Name/Sea Grant Industry Fellow.

Fellowship Program Objectives

To enhance the education and training provided to top graduate students in US colleges and universities; to provide real-world experience of industrial issues to graduate students and to accelerate their career development; to increase interactions between the nation's top scientists and engineers and their industrial counterparts; to accelerate the exchange of information and technologies between universities and industry; to provide a mechanism for industry to influence Sea Grant research priorities and solve problems of importance to industry; and to forge long-term relationships between Sea Grant colleges and industrial firms.

Program Description

The Sea Grant Industry Fellows Program provides, in cooperation with specific companies, support for highly-qualified graduate students who are pursuing research and development projects on topics of interest to a particular industry/company. In a true partnership, the student, the faculty advisor, the Sea Grant college or institute, and the industry representative work together on a project from beginning to end. Research facilities and the cost of the activity are shared. University faculty are the major source for identifying potential industrial collaborators and suitable research topics. However, other sources can be used to identify potential industrial partners including the Sea Grant Marine Advisory Services, university industrial relations offices, and the Sea Grant Review Panel. Sea Grant directors are encouraged to use a variety of sources in building successful partnerships with industry.

III. Eligibility

Applications may be submitted by individuals affiliated with institutions of higher education in the United States.

IV. Evaluation Criteria

The evaluation criteria for proposals submitted for support under the Sea Grant Industry Fellows Program are:

A. The importance of the problem and the benefits expected to the industrial partner and the nation due to the advancement of technology (25%).

B. The benefit accruing to the student from his or her participation as a Sea Grant Industry Fellow, including exposure to industrial methods and mentoring by the industrial partner (25%).

C. The level of commitment of the industrial partner to the project, particularly student stipend support (25%).

D. The caliber of the proposed Fellow, including special skills, past experiences, or training that render him/her especially qualified for the proposed project. Participation by the Fellow in proposal preparation will be viewed favorably (25%).

V. Selection Procedures

Proposals will be received at the individual state Sea Grant Programs who will conduct the mail peer review of the proposed projects in accordance with the Evaluation Criteria listed above. All proposals sent to the National Sea Grant Office must be accompanied by copies of the peer reviews. Complete full proposals and their written reviews will be sent by the state Sea Grant programs to the National Sea Grant Office to be ranked in accordance with the assigned weights of the above evaluation criteria by an independent peer review panel consisting of government, academic, and industry experts with particular expertise in industry/academic interactions. These panel members will provide individual evaluations on each proposal, but there will be no consensus advice. Their recommendations and evaluations will be considered by the National Sea Grant Office in the final selection. Only those proposals rated by the panel as either Excellent, Very Good or Good will be eligible for funding. For those proposals, the National Sea Grant Office will: (a) ascertain which proposals best meet the program objectives, and do not substantially duplicate other projects that are currently funded or are approved for funding by NOAA and other federal agencies, hence, awards may not necessarily be made to the highest-scored proposals; (b) select the proposals to be funded; (c) determine which components of the selected projects will be funded; (d) determine the total duration of funding for each proposal; and (e) determine the amount of funds available for each proposal. Investigators may be asked to modify objectives, work plans, or budgets prior to final approval of the award. Subsequent grant administration procedures will be in accordance with current NOAA grants procedures. A summary statement of the scientific review by the peer panel will be provided to each applicant.

VI. Instructions for Application

Timetable

May 27, 1999, 5 pm (local time)—Proposals due at state Sea Grant Program.

July 7, 1999, 5 pm EST—Proposals due at NSGO.

September 1, 1999 (approximate)—Funds awarded to selected recipients; projects begin.

General guidelines

Interested members of U.S. institutions of higher education may submit a proposal through the nearest Sea Grant program for a grant to support up to two-thirds of the total budget. The fellowship can be for a maximum of two years, though funding will be in annual increments. No more than $30,000 of federal funds may be requested per year. Indirect costs on federal funds are limited to 10 percent of total modified direct costs. The proposal must include a written matching commitment, equal to at least half the federal request, from the industrial partner to support the budget for the proposed project. Allocation of matching funds must be specified in the budget. Use of the industrial matching funds for student stipend support will be looked on favorably.

The budget should include adequate travel funds for the student, the industrial mentor, and the faculty advisor to meet at least twice per year during the fellowship period, preferably at the site of the industrial partner. The budget may also include up to one month of salary or stipend support for one project participant in addition to the selected Fellow who is affiliated to the academic institution. The selected Fellow may not be changed during the grant period. If the selected Fellow is no longer enrolled as a graduate student but continues to work on the project under the supervision of the grantee institution, federal funds may be used for the Fellow's support for no longer than three months beyond the date on which the Fellow's student status expires. This three-month latitude is meant to enable suitable conclusion of the ongoing phase of work. In other respects, the Fellow will be governed by the institution's rules for graduate research assistants.

Proposal Guidelines

Each full proposal should include the items listed below. All pages should be single- or double-spaced, typewritten in at least a 10-point font, and printed on metric A4 (210 mm × 297 mm) or 8½″ × 11″ paper. Brevity will assist reviewers and program staff in dealing effectively with proposals. Therefore, the Project Description may not exceed 10 pages. Tables and visual materials, including charts, graphs, maps, photographs and other pictorial presentations are included in the 10-page limitation; literature citations are not included in the 10-page limitation. Conformance to the 10-page limitations will be strictly enforced. All information needed for review of the proposal should be included in the main text; no appendices are permitted.

(1) Signed Title Page: The title page should be signed by the Principal Investigator and the institutional representative and should clearly identify the program area being addressed by starting the project title with ''Sea Grant Industry Fellow.'' The Principal Investigator and institutional representative should be identified by full name, title, organization, telephone number and address. The total amount of Federal funds and matching funds being requested should be listed for each budget period.

(2) Project Summary: This information is very important. Prior to attending to peer review panel meetings, some of the panelists may need only the project summary. Therefore, it is critical that the project summary accurately describe the research being proposed and convey all essential elements of the research. The project summary should include: 1. Title: Use the exact title as it appears in the rest of the application. 2. Investigators: List the names and affiliations of each investigator who will significantly contribute to the project. Start with the Principal Investigator. 3. Funding request for each year of the project, including matching funds if appropriate. 4. Project Period: Start and completion dates. Proposals should request a start date of September 1, 1999. 5. Project Summary: This should include the rationale for the project, the scientific or technical objectives and/or hypotheses to be tested, and a brief summary of work to be completed.

(3) Project Description (10-page limit):

(a) Introduction/Background/Justification: What is the problem being addressed and what is its scientific and economic importance to the advancement of technology, to the cooperating industrial partner, and to the region or nation?

(b) Research and Technical Plan: What are the goals, objectives, and anticipated approach of the proposed project? While a detailed work plan is not expected, the proposal should present evidence that there has been thoughtful consideration of the approach to the problem under study. What capabilities does the industrial partner possess that will benefit the Fellow?

(c) Output/Anticipated Economic Benefits: Upon successful completion of the project, what are the anticipated benefits to the student, the industrial partner, the university and its faculty, the sponsoring Sea Grant program, and the nation?

(d) References and Literature Citations: Should be included but will not be counted in the 10 page project description limit.

(4) Budget and Budget Justification: There should be a separate budget for each year of the project as well as a cumulative annual budget for the entire project. Applicants are encouraged to use the Sea Grant Budget Form 90–4, but may use their own form as long as it provides the same information as the Sea Grant form. Subcontracts should have a separate budget page. Matching funds must be indicated; failure to provide adequate matching funds will result in the proposal being rejected without review. Each annual that itemizes all budget items in sufficient detail to enable reviewers to evaluate the appropriateness of the funding requested. Please pay special attention to any travel, supply or equipment budgets and provide details. The total dollar amount of indirect costs must not exceed 10 percent of the total proposed direct costs dollar amount in the application.

(5) Current and Pending Support: Applicants must provide information on all current and pending support for ongoing projects and proposals, including subsequent funding in the case of continuing grants. All current project support from whatever source (e.g., Federal, State or local government agencies, private foundations, industrial or other commercial organizations) must be listed. The proposed project and all other projects or activities requiring a portion of time of the principal investigator and other senior personnel should be included, even if they receive no Federal salary support from the project(s). The number of person-months per year to be devoted to the projects must be stated, regardless of source of support. Similar information must be provided for all proposals already submitted or submitted concurrently to other possible sponsors, including those within NOAA.

(6) Vitae of the student, the faculty advisor, and the company-appointed research mentor (2 pages maximum per investigator).

(7) Letter of commitment from the industrial partner.

(8) A brief (one-page) description of the collaborating industrial firm.

(9) Proposers are encouraged (but not required) to include a separate page suggesting reviewers that the proposers believe are especially well qualified to review the proposal. Proposers may also designate persons they would prefer not review the proposal, indicating why.

These suggestions will be considered during the review process.

(10) Standard Application Forms: Applicants may obtain all required application forms through the World Wide Web at http://www.mdsg.umd.edu/NSGO/research/rfp/index.html, from the state Sea Grant Programs or from Dr. Vijay Panchang at the National Sea Grant Office (phone: 301–713–2435 x142 or e-mail: vijay.panchang@noaa.gov). The following forms must be included:

(a) Standard Forms 424, Application for Federal Assistance, 424A, Budget Information—Non-Construction Programs; and 424B, Assurances—Non-Construction Programs, (Rev 4–88). Please note that both the Principal Investigator and an administrative contact should be identified in Section 5 of the SF424. For Section 10, applicants should enter ''11.417'' for the CFDA Number and ''Sea Grant Support'' for the title. The form must contain the original signature of an authorized representative of the applying institution.

(b) Primary Applicant Certifications. All primary applicants must submit a completed Form CD–511, ''Certifications Regarding Debarment, Suspension and Other Responsibility Matters; Drug-Free Workplace Requirements and Lobbying,'' and the following explanations are hereby provided:

(i) Nonprocurement Debarment and Suspension. Prospective participants (as defined at 15 CFR Part 26, Section 105) are subject to 15 CFR Part 26, ''Nonprocurement Debarment and Suspension'' and the related section of the certification form prescribed above applies;

(ii) Drug-Free Workplace. Grantees (as defines at 15 CFR Part 26, Section 605) are subject to 15 CFR Part 26, Subpart F, ''Government-wide Requirements for Drug-Free Workplace (Grants)'' and the related section of the certification form prescribed above applies;

(iii) Anti-Lobbying. Persons (as defined at 15 CFR Part 28, Section 105) are subject to the lobbying provisions of 31 U.S.C. 1352, ''Limitation on use of appropriated funds to influence certain Federal contracting and financial transactions,'' and the lobbying section of the certification form prescribed above applies to applications/bids for grants, cooperative agreements, and contracts for more than $100,000, and loans and loan guarantees for more than $150,000; and

(iv) Anti-Lobbying Disclosures. Any applicant that has paid or will pay for lobbying using any funds must submit an SF–LLL, ''Disclosure of Lobbying Activities,'' as required under 15 CFR Part 28, Appendix B.

(c) Lower Tier Certifications. Recipients shall require applicants/bidders for subgrants, contracts, subcontracts, or other lower tier covered transactions at any tier under the award to submit, it applicable, a completed Form CD–512, ''Certifications Regarding Debarment, Suspension, Ineligibility and Voluntary Exclusion-Lower Tier Covered Transactions and Lobbying'' and disclosure form, SF–LLL, ''Disclosure of Lobbying Activities.'' Form CD–512 is intended for the use of recipients and should not be transmitted to the Department of Commerce (DOC). SF–LLL submitted by any tier recipient or subrecipient should be submitted to DOC in accordance with the instructions contained in the award document.

VII. How to Submit

Proposals must be submitted to the state Sea Grant Programs according to the schedule outlined above. Although investigators are not required to submit more than 3 copies of the proposal, the normal review process requires 10 copies. Investigators are encouraged to submit sufficient proposal copies for the full review process if they wish all reviewers to receive color, unusually sized (not 8.5×11″), or otherwise unusual materials, submitted as part of the proposal. Only three copies of the Federally required forms are needed. The addresses of the Sea Grant College Program directors may be found on Sea Grant's World Wide Web home page (http://www.mdsg.umd.edu/NSGO/index.html) or may also be obtained by contacting the Program Manager, Dr. Vijay Panchang, at the National Sea Grant Office (phone: 301–713–2435 x142 or e-mail:vijay.panchang@noaa.gov). Proposals sent to the National Sea Grant Office should be addressed to: National Sea Grant Office, R/SG, Attn: Sea Grant Industry Fellows Program Coordinator, NOAA, Room 11828, 1315 East-West Highway, Silver Spring, MD 20910 (phone 301–713–2435 for express mail applications).

Applications received after the deadline and applications that deviate from the format described above will be returned to the sender without review. Facsimile transmissions and electronic mail submission of applications will not be accepted.

VIII. Other Requirements

(A) Federal Policies and Procedures—Recipients and subrecipients are sublet to all Federal laws and Federal and Department of Commerce (DOC) policies, regulations, and procedures applicable to Federal financial assistance awards.

(B) Past Performance—Unsatisfactory performance under prior Federal awards may result in an application not being considered for funding.

(C) Preaward Activities—If applicants incur any costs prior to an award being made, they do so solely at their own risk of not being reimbursed by the Government. Notwithstanding any verbal or written assurance that may have been received, there is no objection on the part of DOC to cover preaward costs.

(D) No Obligation for Future Funding—If an application is selected for funding, DOC has no obligation to provide any additional future funding in connection with that award. Renewal of an award to increase funding or extend the period of performance is at the total discretion of DOC.

(E) Delinquent Federal Debts—No award of Federal funds shall be made to an applicant who has an outstanding delinquent Federal debt until either:

(1) The delinquent account is paid in full,

(2) A negotiated repayment schedule is established and at least one payment is received, or

(3) Other arrangements satisfactory to DOC are made.

(F) Name Check Review—All non-profit and for-profit applicants are subject to a name check review process. Name checks are intended to reveal if any key individuals associated with the applicant have been convicted of or are presently facing criminal charges such as fraud, theft, perjury, or other matters which significantly reflect on the applicant's management honesty or financial integrity.

(G) False Statements—A false statement on an application is grounds for denial or termination of funds and grounds for possible punishment by a fine or imprisonment as provided in 18 U.S.C. 1001.

(H) Intergovernmental Review—Applications for support from the National Sea Grant College Program are not subject to Executive Order 12372, ''Intergovernmental Review of Federal Programs.

(I) Purchase of American-Made Equipment and Products—Applicants are hereby notified that they will be encouraged to the greatest extent practicable, to purchase American-made equipment and products with funding provided under this program.

Classification

Prior notice and an opportunity for public comments are not required by the

Administrative Procedure Act or any other law for this notice concerning grants, benefits, and contracts. Therefore, a regulatory flexibility analysis is not required for purposes of the Regulatory Flexibility Act.

This action has been determined to be not significant for purposes of E.O. 12866.

This notice contains collection of information requirements subject to the Paperwork Reduction Act. The Sea Grant Budget Form and Standard Forms 424, 424a and 424b have been approved under control numbers 0648–0362, 0348–0043, 0348–0044, and 0348–0040 with average responses estimated to take 15, 45, 180, and 15 minutes, respectively. These estimates include the time for reviewing instructions, searching existing data sources, gathering and maintaining the data needed, and completing and reviewing the collection of information. Send comments on these estimates or any other aspect of these collections to National Sea Grant College Program, R/SG, NOAA, 1315 East-West Highway, Silver Spring, MD 20910 (Attention: Francis S. Schuler) and to the Office of Information and Regulatory Affairs, Office of Management and Budget, Washington, DC 20503 (Attention: NOAA Desk Officer). Notwithstanding any other provision of the law, no person is required to respond to, nor shall any person be subject to a penalty for failure to comply with, a collection of information subject to the requirements of the Paperwork Reduction Act, unless that collection of information displays a currently valid OMB Control Number.

Dated: February 25, 1999.

Louisa Koch,

Deputy Assistant Administrator, Office of Oceanic and Atmospheric Research, National Oceanic and Atmospheric Administration.

[FR Doc. 99–5117 Filed 3–4–99; 8:45 am]

BILLING CODE 3510–KA–M

DEPARTMENT OF COMMERCE

National Oceanic and Atmospheric Administration

[Docket No. 990125032–9032–01]

RIN 0648–ZA58

Sea Grant Technology Program: Request for Proposals; for FY 1999

AGENCY: National Sea Grant College Program, National Oceanic and Atmospheric Administration, Department of Commerce.

ACTION: Notice of request for proposals.

SUMMARY: The purpose of this notice is to advise the public that the National Sea Grant College Program (Sea Grant) is entertaining preliminary proposals and subsequently full proposals for a technology transfer and development program to fulfill its broad responsibilities in fostering economic competitiveness through the transfer of technology pertaining to the development and utilization of ocean, coastal, and Great Lakes resources. In FY 1999, Sea Grant expects to provide about $1,550,000 to support projects that can accelerate the transfer of academic science and technology to the market. Of this amount, $800,000 will be allocated for technologies related specifically to aquaculture. It is desirable that proposals, which must be submitted through state Sea Grant Programs, involve industrial partners. Matching funds equal to a minimum of 50% of the federal request must be provided. Successful projects will be selected through national competition.

DATES: Preliminary proposals must be submitted before 5 pm (local time) on April 5, 1999 to the nearest state Sea Grant College Program. After evaluation at the National Sea Grant Office, some proposers will be encouraged to prepare full proposals, which must be submitted before 5 pm (local time) on May 27, 1999 to the nearest state Sea Grant College Program.

ADDRESSES: Preliminary proposals and full proposals must be submitted through the nearest state Sea Grant Program. The addresses of the Sea Grant College Program directors may be found on Sea Grant's home page (http://www.mdsg.umd.edu/NSGO/index.html) or may also be obtained by contacting the Program Manager at the National Sea Grant Office (see below).

FOR FURTHER INFORMATION CONTACT: Dr. Vijay G. Panchang, Program Manager, National Sea Grant College Program, R/SG, NOAA, 1315 East-West Highway, Silver Spring, MD 20910. Tel. (301) 713–2435 ext. 142; e-mail: Vijay.Panchang@noaa.gov.

SUPPLEMENTARY INFORMATION:

I. Program Authority

Authority: 33 U.S.C. 1121–1131.

(Catalog of Federal Domestic Assistance Number: 11.417, Sea Grant Support.)

II. Program Description

Background

The ocean environment has traditionally provided an abundance of economic opportunities over a wide spectrum of activities. As a result of growing population pressures, the demands to maintain a sustainable and healthy environment, and ongoing scientific advancements, the economic potential afforded by the marine environment may be expected to increase. On the other hand, globalization has put unprecedented demands on U.S. industry for innovation and the development of new technologies. Economic competitiveness can be fostered by creating opportunities for collaboration between industrial and academic scientists and engineers, as well as by supporting post-fundamental work to accelerate the conversion of academic research into products with commercial value.

The ''National Sea Grant College Program Reauthorization Act of 1997'' (33 U.S.C. 1121–1131) calls upon the National Sea Grant College Program (Sea Grant) to foster economic competitiveness, invest in technology transfer, and create partnerships between the Federal Government and universities, private industry, and other agencies in the development and utilization of marine resources. To meet these objectives, Sea Grant's technology program is meant to serve as a catalyst for scientific entrepreneurship and technology transfer and thereby enhance commerce. With at least one-third of the total cost provided as required matching funds by the grantee, Sea Grant expects to provide federal support of approximately $1,550,000 to support new projects in 1999. The federal request for each project, which will be of 18 months duration or less, may not exceed $150,000.

Program Goals

To conduct focuses projects that can lead to the development and utilization of marine resources and related technological innovations and their acceptance in the marketplace (both in the U.S. and abroad); to increase interactions between the nation's academic scientists and engineers and their industrial counterparts; to accelerate the transfer of research-based marine science from universities to new technologies in industry; to provide a mechanism for industry to influence Sea Grant research priorities and solve problems of importance to industry; to increase cost-effectiveness of seafood production through aquaculture; and to forge long-term relationships between Sea Grant colleges and industrial firms.

Funding Priorities

The Sea Grant technology program provides support for applied research and development projects that ultimately facilitate the transfer of new products and processes related to the development of marine resources,

including cost reductions for processes and product safety. Proposals must be submitted through a state Sea Grant program, but in a true partnership that benefits national or regional economies, industrial cooperation in academic research and development efforts could be expected and such cooperation should be sought. University faculty are the major source for identifying potential industrial collaborators and suitable research topics. However, other sources can be used to identify potential industrial partners or user groups, such as the Sea Grant Marine Extension Program, university industrial relations offices, and the Sea Grant Review Panel. Sea Grant directors are encouraged to use a variety of sources in building successful partnerships with industry or other user groups.

Several types of projects will be considered under this announcement. These include, for example, the following:

(1) Additional developmental work that can accelerate the transition of academic research to marketplace acceptance. For example, pilot-scale testing of technologies developed in academia may be necessary to establish economic feasibility. A private sector partner may or may not be identified. (If the work has imminent commercial implications and an industrial partner is involved, the partner may reasonably be expected to provide matching funds.)

(2) A project which does not lead to a commercializable product per se, but is of mutual benefit to industry and academia. For example, if industry anticipates future trends either due to market forces or government regulations, it may wish to prepare for them by developing technologies with help from academia. If there is actual transfer of technologies to industry, then participation by an industrial partner may be appropriate.

(3) Technology transfer or demonstration projects and workshops/forums given by academic researchers and mainly targeted to industry, involving registration or other fees paid by industry which can constitute industrial match.

(4) Technology transfer to user groups in government or other agencies that enhances cost-effectiveness of operations.

(Proposals that will be considered under this announcement are not limited to the above types of projects, which are given by way of example only.)

Projects in all areas of marine resource utilization and economic development of coastal environments will be considered. (See Sea Grant's Long Range Plan on Sea Grant's home page or that of the nearest Sea Grant College program). Examples include biotechnology, environmental technology, fisheries and aquaculture, and marine infrastructure. However, $800,000 will be earmarked for technologies related specifically to projects dealing with aquaculture. The development of a robust aquaculture industry is part of NOAA's Strategic Plan and is intended to help meet the seafood needs of a growing population, reduce imports of fisheries products, and benefit the nation's balance of trade. In particular, proposals are sought that deal with enabling technologies for species with major commercial potential in the near future; areas of interest are: the performance and cost-effectiveness of environmentally sound culture systems; license and permit procedures; best management procedures; genetic improvement leading to reduced production costs; production of less expensive feed delivery and utilization; stability, palatability, and shelf-life of aquaculture products; health and disease diagnosis and control; and related areas. A match equal to at least one-half of the federal contribution is required for all proposals.

III. Eligibility

Applications may be submitted by individuals; public or private corporations, partnerships, or other associations or entities (including institutions of higher education, institutes, or non-Federal laboratories), or any State, political subdivision of a State, or agency or officer thereof.

IV. Evaluation Criteria

The evaluation criteria for proposals submitted for support under the Sea Grant Technology Program are:

A. Importance of the problem and the benefits expected to the nation due to the advancement of technology (30%).

B. Appropriateness of methodologies to be used (30%).

C. Potential for technology transfer to user groups such as industry and/or for enhanced economic value. Participation (especially matching contributions) by an industrial partner or other user groups will be viewed favorably (30%).

D. Qualifications of project participants (10%).

V. Selection Procedures

Preliminary proposals will be reviewed at the National Sea Grant Office (NSGO) by a panel composed of individuals from the federal government with expertise in industry/academic interactions and/or academia and industry. The panel will be asked to assess each proposal based on the importance of the technology to the nation, the potential for technology transfer to user groups and/or enhanced economic value, and the qualifications of project participants from the viewpoint of the project. The panel will make individual recommendations to the Director of the NSGO regarding which preliminary proposals may be suitable for further consideration. On the basis of the panel's recommendations, the Director of the NSGO will advise proposers whether or not the submission of full proposals is encouraged. Invitation to submit a full proposal does not constitute an indication that the proposal will be funded. Interested parties who are not invited to submit full proposals will not be precluded from submitting full proposals if they have submitted a preliminary proposal in accordance with the procedures described below.

Full proposals will be received at the individual state Sea Grant Programs who will conduct the mail peer review of the proposed project for importance of the problem being addressed, scientific and technical merit, and potential for technology transfer or enhanced economic value. Complete full proposals and their written reviews will be sent by the state Sea Grant programs to the National Sea Grant Office to be ranked in accordance with the assigned weights of the above evaluation criteria by an independent peer review panel consisting of government, academic, and industry experts. These panel members will provide individual evaluations on each proposal, but there will be no consensus advice. Their recommendations and evaluations will be considered by the National Sea Grant Office in the final selection. Only those proposals rated by the panel as either Excellent, Very Good or Good will be eligible for funding. For those proposals, the National Sea Grant Office will: (a) ascertain which proposals best meet the program goals, and do not substantially duplicate other projects that are currently funded or are approved for funding by NOAA and other federal agencies, hence, awards may not necessarily be made to the highest-scored proposals; (b) select the proposals to be funded; (c) determine which components of the selected projects will be funded; (d) determine the total duration of funding for each proposal; and (e) determine the amount of funds available for each proposal. Investigators may be asked to modify objectives, work plans, or budgets prior to final approval of the award. Subsequent grant administration

procedures will be in accordance with current NOAA grants procedures. A summary statement of the scientific review by the peer panel will be provided to each applicant.

VI. Instructions for Application

Timetable

April 5, 1999, 5 pm (local time)—Preliminary proposals due at state Sea Grant Program.

April 8, 1999, 5 pm EST—Preliminary proposals due at NSGO.

May 17, 1999, 5 pm (local time)—Full proposals due at state Sea Grant Program.

July 7, 1999, 5 pm EST—Full proposals due at NSGO.

October 1, 1999 (approximate)—Funds awarded to selected recipients; projects begin.

General Guidelines

Interested parties must submit a preliminary proposal, and if invited, a full proposal through university-based Sea Grant programs for a grant to support up to two-thirds of the total budget. The project can be for a maximum of 18 months duration. No more than $150,000 of federal funds may be requested for the project. Allocation of matching funds, equal to at least half the federal request, must be specified in the budget.

What to Submit

Preliminary Proposal Guidelines

To prevent the expenditure of effort that may not be successful, proposers must first submit preliminary proposals. Preliminary proposals must be single- or double-spaced, typewritten in at least a 10-point font, and printed on metric A4 (210 mm x 297 mm) or 8½″ x 11″ paper. The following information should be included:

(1) Signed Title Page: the title page should be signed by the Principal Investigator and should clearly identify the program area being addressed by starting the project title with ''Sea Grant Technology Program.'' Principal Investigators and collaborators should be identified by affiliation and contact information. The total amount of Federal funds and matching funds being requested should be listed, as well as the source of the matching funds. Preliminary proposals must include matching funds equivalent to at least 50% of the Federal funds requested.

(2) A concise (2-page limit) description of the project that addresses the following questions: What technology will be developed? How is it important to the nation? What fundamental work has been done that allows advancement of this technology to a more applied level? What are the anticipated economic benefits? Proposers should consult the Evaluation Criteria for additional guidance in preparing the preliminary proposals.

(3) Resumes (1-page limit) of the Principal Investigators.

(4) Proposers are encouraged (but not required) to include a separate page suggesting reviewers that the proposers believe are especially well qualified to review the proposal. Proposers may also designate persons they would prefer not review the proposal, indicating why. These suggestions will be considered during the review process.

Three copies of the preliminary proposals must be submitted to the nearest state Sea Grant Program Director before 5 pm (local time) on April 5, 1999. Preliminary proposals will then be forwarded by the Sea Grant Programs, along with a cover letter, to Dr. Vijay Panchang, Program Manager, at the address below so as to reach the National Sea Grant Office (NSGO) on or before 5 pm on April 8, 1999. No institutional signatures or federal government forms are needed while submitting preliminary proposals.

Full Proposal Guidelines

Each full proposal should include the items listed below. All pages should be single- or double-spaced, typewritten in at least a 10-point font, and printed on metric A4 (210 mm x 297 mm) or 8½″ x 11″ paper. Brevity will assist reviewers and program staff in dealing effectively with proposals. Therefore, the Project Description may not exceed 15 pages. Tables and visual materials, including charts, graphs, maps, photographs and other pictorial presentations are included in the 15-page limitation; literature citations are not included in the 15-page limitation. Conformance to the 15-page limitation will be strictly enforced. All information needed for review of the proposal should be included in the main text; no appendices are permitted.

(1) Signed Title Page: The title page should be signed by the Principal Investigator and the institutional representative and should clearly identify the program area being addressed by starting the project title with ''Sea Grant Technology Program.'' The Principal Investigator and institutional representative should be identified by full name, title, organization, telephone number and address. The total amount of Federal funds and matching funds being requested should be listed.

(2) Project Summary: This information is very important. Prior to attending the peer review panel meetings, some of the panelists may read only the project summary. Therefore, it is critical that the project summary accurately describe the research being proposed and convey all essential elements of the research. The project summary should include: 1. Title: Use the exact title as it appears in the rest of the application. 2. Investigators: List the names and affiliations of each investigator who will significantly contribute to the project. Start with the Principal Investigator. 3. Funding request for each year of the project, including matching funds if appropriate. 4. Project Period: Start and completion dates. Proposals should request a start date of October 1, 1999. 5. Project Summary: This should include the rationale for the project, the scientific or technical objectives and/or hypotheses to be tested, and a brief summary of work to be completed.

(3) Project Description (15-page limit):

(a) Introduction/Background/Justification: Subjects that the investigator(s) may wish to include in this section are: (i) Previous fundamental research and a description of what additional work is needed to enhance the economic value of this fundamental work; (ii) contributions that the study will make to the particular discipline or subject area; and (iii) significance of the proposed technology to the region and nation;

(b) Research or Technical Plan: (i) objectives to be achieved, hypotheses to be tested; (ii) Experimental design and statistical analysis to be used; (iii) Plan or work—detailed methodology, collaboration with industry or other user groups (if appropriate), and a timetable for project activities; and (iv) Role of project personnel.

(c) Output/Anticipated Economic Benefits: This may be measured, for example, by patents or licenses; commercializable new products (e.g., pharmaceutical and other products from marine biotechnology, equipment for aquaculture operations, products used in or obtained from marine engineering operations, computer models for simulation of marine processes, etc.); process improvements (e.g., seafood processing, harbor design or dredging procedures, biochemical engineering, etc.); corporate investments in academic research efforts; private sector job opportunities for students involved in the project.

(d) Coordination with other Program Elements: Describe any coordination with other agency programs or ongoing research efforts. Describe any other proposals that are essential to the success of this proposal.

(e) References and Literature Citations: Should be included but will not be counted in the 15 page project description limit.

(4) Budget and Budget Justification: There should be one cumulative budget for the entire project period. Applicants are encouraged to use the Sea Grant Budget Form 90–4, but may use their own form as long as it provides the same information as the Sea Grant form. Subcontracts should have a separate budget page. Matching funds must be indicated; failure to provide adequate matching funds will result in the proposal being rejected without review. The budget should include a separate budget justification page that itemizes all budget items in sufficient detail to enable reviewers to evaluate the appropriateness of the funding requested. Please pay special attention to any travel, supply or equipment budgets and provide details. Regardless of any approved indirect cost rate applicable to the award, the maximum dollar amount of allocable indirect costs for which the Department of Commerce will reimburse the Recipient shall be the lesser of: (a) The Federal share of the total allocable indirect costs of the award based on the negotiated rate with the cognizant Federal agency as established by audit or negotiation; or (b) The line item amount for the Federal share of indirect costs contained in the approved budget of the award.

(5) Current and Pending Support: Applicants must provide information on all current and pending support for ongoing projects and proposals, including subsequent funding in the case of continuing grants. All current project support from whatever source (e.g., Federal, State or local government agencies, private foundations, industrial or other commercial organizations) must be listed. The proposed project and all other projects or activities requiring a portion of time of the principal investigator and other senior personnel should be included, even if they receive no Federal salary support from the project(s). The number of person-months per year to be devoted to the projects must be stated, regardless of source of support. Similar information must be provided for all proposals already submitted or submitted concurrently to other possible sponsors, including those within NOAA.

(6) Vitae (2 pages maximum per investigator)

(7) Letter of commitment from any industrial partner, if appropriate.

(8) A brief (one-page) description of the collaborating industrial firm, if appropriate.

(9) Standard Application Forms: Applicants may obtain all required application forms through the World Wide Web at http://www.mdsg.umd.edu/NSGO/research/rfp/index.html, from the state Sea Grant Programs or from Dr. Vijay Panchang at the National Sea Grant Office (phone: 301–713–2435 x142 or e-mail: vijay.panchang@noaa.gov). The following forms must be included.

(a) Standard Forms 424, Application for Federal Assistance, 424A, Budget Information—Non-Construction Programs; and 424B, Assurances—Non-Construction Programs, (Rev. 4–88). Applications should clearly identify the program area being addressed by starting the project title with either as appropriate. Please not that both the Principal Investigator and an administrative contact should be identified in Section 5 of the SF424. For Section 10, applicants should enter ''11.417'' for the CFDA Number and ''Sea Grant Support'' for the title. The form must contain the original signature of an authorized representative of the applying institution.

(b) Primary Applicant Certifications. All primary applicants must submit a completed Form CD–511, ''Certifications Regarding Debarment, Suspension and Other Responsibility Matters; Drug-Free Workplace Requirements and Lobbying,'' and the following explanation are hereby provided:

(i) Nonprocurement Debarment and Suspension. Prospective participants (as defined at 15 CFR Part 26, Section 105) are subject to 15 CFR Part 26, ''Nonprocurement Debarment and Suspension'' and the related section of the certification form prescribed above applies:

(ii) Drug-Free Workplace. Grantees (as defined at 15 CFR Part 26, Section 605) are subject to 15 CFR Part 26, Subpart F, ''Government wide Requirements for Drug-Free Workplace (Grants)'' and the related section of the certification form prescribed above applies;

(iii) Anti-Lobbying. Persons (as defined at 15 CFR Part 28, Section 105) are subject to the lobbying provisions of 31 U.S.C. 1352, ''Limitation on use of appropriated funds to influence certain Federal contracting and financial transactions,'' and the lobbying section of the certification form prescribed above applies to applications/bids for grants, cooperative agreements, and contracts for more than $100,000, and loans and loan guarantees for more than $150,000, or the single family maximum mortgage limit for affected programs, whichever is greater; and

(iv) Anti-Lobbying Disclosures. Any applicant that has paid or will pay for lobbying using any funds must submit an SF–LLL, ''Disclosure of Lobbying Activities,'' as required under 15 CFR Part 28, Appendix B.

(c) Lower Tier Certifications. Recipients shall require applicants/bidders for subgrants, contracts, subcontracts, or other lower tier covered transactions at any tier under the award to submit, if applicable, a completed Form CD–512, ''Certifications Regarding Debarment, Suspension, Ineligibility and Voluntary Exclusion-Lower Tier Covered Transactions and Lobbying'' and disclosure form, SF–LLL, ''Disclosure of Lobbying Activities.'' Form CD–512 is intended for the use of recipients and should not be transmitted to the Department of Commerce (DOC). SF–LLL submitted by any tier recipient of subrecipient should be submitted to DOC in accordance with the instructions contained in the award document.

VII. How to Submit

Preliminary proposals and proposals must be submitted to the state Sea Grant Programs according to the schedule outlined above. Although investigators are not required to submit more than 3 copies of either preproposals or full proposals, the normal review process requires 10 copies. Investigators are encouraged to submit sufficient copies for the full review process if they wish all reviewers to receive color, unusually sized (not 8.5 x 11″), or otherwise unusual materials submitted as part of the proposal. Only three copies of the Federally required forms are needed. The addresses of the Sea Grant College Program directors may be found on Sea Grant's World Wide Web home page (http://www.mdsg.umd.edu/NSGO/index.html) or may also be obtained by contacting the Program Manager, Dr. Viujay Panchang, at the National Sea Grant Office (phone: 301–713–2435 x152 or e-mail: vijay.panchang@noaa.gov). Preproposals and proposals sent to the National Sea Grant Office should be addressed to: National Sea Grant Office, R/SG, Attn: Sea Grant Technology Program Coordinator, NOAA, Room 11828, 1315 East-West Highway, Silver Spring, MD 20910 (phone 301–713–2435 for express mail applications).

Applications received after the deadline and applications that deviate from the format described above will be returned to the sender without review. Facsimile transmissions and electronic mail submission of applications will not be accepted.

VIII. Other Requirements

(A) Federal Policies and Procedures—Recipients and subrecipients are subject to all Federal laws and Federal and Department of Commerce (DOC) policies, regulations, and procedures applicable to Federal financial assistance awards.

(B) Past Performance—Unsatisfactory performance under prior Federal awards may result in an application not being considered for funding.

(C) Preaward Activities—If applicants incur any costs prior to an award being made, they do so solely at their own risk of not being reimbursed by the Government. Notwithstanding any verbal or written assurance that may have been received, there is no obligation on the part of DOC to cover preaward costs.

(D) No Obligation for Future Funding—If an application is selected for funding, DOC has no obligation to provide any additional future funding in connection with that award. Renewal of an award to increase funding or extend the period of performance is at the total discretion of DOC.

(E) Delinquent Federal Debts—No award of Federal Funds shall be made to an applicant who has an outstanding delinquent Federal debt until either:

(1) The delinquent account is paid in full,

(2) A negotiated repayment schedule is established and at least one payment is received, or

(3) Other arrangements satisfactory to DOC are made.

(F) Name Check Review—All non-profit and for-profit applicants are subject to a name check review process. Name checks are intended to reveal if any key individuals associated with the applicant have been convicted of or are presently facing criminal charges such as fraud, theft, perjury, or other matters which significantly reflect on the applicant's management honesty or financial integrity.

(G) False Statements—A false statement on an application is grounds for denial or termination of funds and grounds for possible punishment by a fine or imprisonment as provided in 18 U.S.C. 1001.

(H) Intergovernmental Review—Applications for support from the National Sea Grant College Program are not subject to Executive Order 12372, ''Intergovernmental Review of Federal Programs.

(I) Purchase of American-Made Equipment and Products—Applicants are hereby notified that they will be encouraged to the greatest extent practicable, to purchase American-made equipment and products with funding provided under this program.

Classification

Prior notice and an opportunity for public comments are not required by the Administrative Procedure Act or any other laws for this notice concerning grants, benefits, and contracts. Therefore, a regulatory flexibility analysis is not required for purposes of the Regulatory Flexibility Act.

This action has been determined to be not significant for purposes of E.O. 12866.

This notice contains collection of information requirements subject to the Paperwork Reduction Act. The Sea Grant Budget Form and Standard Forms 424, 424a and 424b have been approved under control numbers 0648–0362, 0348–0043, 0348–0044, and 0348–0040 with average responses estimated to take 15, 45, 180, and 15 minutes, respectively. These estimates include the time for reviewing instructions, searching existing data sources, gathering and maintaining the data needed, and completing and reviewing the collection of information. Send comments on these estimates or any other aspect of these collections to National Sea Grant College Program, R/SG, NOAA, 1315 East-West Highway, Silver Spring, MD 20910 (Attention: Francis S. Schuler) and to the Office of Information and Regulatory Affairs, Office of Management and Budget, Washington, DC 20503 (Attention: NOAA Desk Officer). Notwithstanding any other provision of the law, no person is required to respond to, nor shall any person be subject to a penalty for failure to comply with, a collection of information subject to the requirements of the Paperwork Reduction Act, unless that collection of information displays a currently valid OMB Control Number.

Dated: February 25, 1999.

Louisa Koch,

Deputy Assistant Administrator, Office of Oceanic and Atmospheric Research, National Oceanic and Atmospheric Administration.

[FR Doc. 99–5118 Filed 3–4–99; 8:45 am]

BILLING CODE 3510–KA–M

DEPARTMENT OF COMMERCE

National Oceanic and Atmospheric Administration

[I.D. 021699A]

Small Takes of Marine Mammals Incidental to Specified Activities; Seismic Hazards Investigation in Southern California

AGENCY: National Marine Fisheries Service (NMFS), National Oceanic and Atmospheric Administration (NOAA), Commerce.

ACTION: Notice of receipt of application and proposed authorization for a small take exemption; request for comments.

SUMMARY: NMFS has received a request from the U.S. Geological Survey (USGS) for an authorization to take small numbers of marine mammals by harassment incidental to collecting marine seismic-reflection data offshore from southern California. Under the Marine Mammal Protection Act (MMPA), NMFS is requesting comments on its proposal to authorize the USGS to incidentally take, by harassment, small numbers of marine mammals in the afore mentioned area for a 2-week period between May and July 1999.

DATES: Comments and information must be received no later than April 5, 1999.

ADDRESSES: Comments on the application should be addressed to Donna Wieting, Acting Chief, Marine Mammal Division, Office of Protected Resources, NMFS, 1315 East-West Highway, Silver Spring, MD 20910–3225. A copy of the application may be obtained by writing to this address or by telephoning one of the contacts listed here.

FOR FURTHER INFORMATION CONTACT: Kenneth R. Hollingshead, NMFS, (301) 713–2055, or Christina Fahy, NMFS, 562–960–4017.

SUPPLEMENTARY INFORMATION:

Background

Sections 101(a)(5)(A) and (D) of the MMPA (16 U.S.C. 1361 *et seq.*) directs the Secretary of Commerce to allow, upon request, the incidental, but not intentional, taking of marine mammals by U.S. citizens who engage in a specified activity (other than commercial fishing) within a specified geographical region if certain findings are made and either regulations are issued or, if the taking is limited to harassment, a notice of a proposed authorization is provided to the public for review.

Permission may be granted if NMFS finds that the taking will have a

negligible impact on the species or stock(s) and will not have an unmitigable adverse impact on the availability of the species or stock(s) for subsistence uses and that the permissible methods of taking and requirements pertaining to the monitoring and reporting of such takings are set forth. NMFS has defined ''negligible impact'' in 50 CFR 216.103 as '' ...an impact resulting from the specified activity that cannot be reasonably expected to, and is not reasonably likely to, adversely affect the species or stock through effects on annual rates of recruitment or survival.''

Subsection 101(a)(5)(D) of the MMPA established an expedited process by which citizens of the United States can apply for an authorization to incidentally take small numbers of marine mammals by harassment. The MMPA now defines ''harassment'' as:

> ...any act of pursuit, torment, or annoyance which (a) has the potential to injure a marine mammal or marine mammal stock in the wild; or (b) has the potential to disturb a marine mammal or marine mammal stock in the wild by causing disruption of behavioral patterns, including, but not limited to, migration, breathing, nursing, breeding, feeding, or sheltering.

Subsection 101(a)(5)(D) establishes a 45-day time limit for NMFS review of an application followed by a 30-day public notice and comment period on any proposed authorizations for the incidental harassment of small numbers of marine mammals. Within 45 days of the close of the comment period, NMFS must either issue or deny issuance of the authorization.

Summary of Request

On January 15, 1999, NMFS received a request from the USGS for authorization to take small numbers of several species of marine mammals by harassment incidental to collecting marine seismic-reflection data offshore from southern California. Seismic data will be collected during a 2-week period between May and July 1999, to support studies of the regional landslide and earthquake hazards and to understand how saltwater invades

coastal aquifers. A revised request was received on February 11, 1999.

Background

The USGS proposes to conduct a high-resolution seismic survey offshore from Southern California, for a 2-week period between May and July 1999. The USGS would like to collect seismic-reflection data to investigate: (1) the hazards posed by landslides and potential earthquake faults in the nearshore region from Santa Barbara to San Diego and (2) the invasion of seawater into freshwater aquifers that are critical to the water supply for people within the Los Angeles-San Pedro area. Both of these tasks are multi-year efforts that require using a small airgun.

Coastal Southern California is the most highly populated urban area along the U.S. Pacific coast. The primary objective of the USGS research is to provide information to help mitigate the earthquake threat to this area. The USGS emphasizes that the goal is not earthquake prediction but rather an assistance in determining what steps might be taken to minimize the devastation should a large quake occur. The regional earthquake threat is known to be high, and a major earthquake could adversely affect the well being of a large number of people.

Important geologic information that the USGS will derive from this project's seismic-reflection data concerns how earthquake deformation is distributed offshore, that is, where the active faults are and what the history of movement along them has been. This should improve understanding of the shifting pattern of deformation that occurred over both the long term (approximately the last 100,000 years) and short term (the last few thousand years). The USGS seeks to identify actively deforming structures that may constitute significant earthquake threats. The USGS also proposes to locate offshore landslides that might affect coastal areas. Not only major subsea landslides might affect the footings of coastal buildings, but also very large slides can generate local tsunamis. These large sea waves can be generated by seafloor movement that is produced either by landslides or by earthquakes. Knowing where large slides have occurred offshore will help locate areas susceptible to wave inundation.

Some faults that have produced earthquakes lie entirely offshore or extend into offshore areas where they can be studied using high-resolution seismic-reflection techniques. An example is the Rose Canyon fault, which extends through the San Diego area, and is considered to be the primary earthquake threat. This fault extends northward from La Jolla, beneath the inner continental shelf, and appears again onshore in the Los Angeles area. This fault and others like it near shore could generate moderate (M5-6) to large (M6-7) earthquakes.

Knowing the location and geometry of fault systems is critical to estimating the location and severity of ground shaking. Therefore the results of this project will contribute to decisions involving land use, hazard zonation, insurance premiums, and building codes.

The proposed work is in collaboration with scientists at the Southern California Earthquake Center, which analyzes faults and earthquakes in onshore regions, and with scientists at the Scripps Institute of Oceanography, who measure strain (incremental movement) on offshore faults.

The USGS also wants to collect high-resolution seismic- reflection data to locate the sources and pathways of seawater that intrudes into freshwater aquifers below San Pedro. Ground water usage in the Los Angeles basin began in the mid-1800s. Today, more than 44,000 acre-feet of freshwater each year are extracted from the aquifers that underlie just the city of San Pedro. Extracting freshwater from coastal aquifers causes offshore salt water to flow toward areas of active pumping. To limit this salt-water intrusion, the Water Replenishment District and water purveyors in San Pedro are investing $2.7 million per year to inject freshwater underground to establish a zone of high water pressure in the aquifer. The resulting zone of high pressure will form a barrier between the invasive saltwater and the productive coastal aquifers.

USGS scientists in San Diego are working with the Los Angeles County Department of Public Works and the Water Replenishment District to develop a ground-water simulation model to predict fluid flow below San Pedro and nearby parts of the Los Angeles Basin. This model will eventually be used in managing water resources. The accuracy of the present model, however, is compromised by a paucity of information about aquifer geometry and about other geologic factors that might affect fluid flow. Data the USGS collects will be used to improve three-dimensional, fluid-flow models to aid management of water resources.

Fieldwork described here will be the third airgun survey that the USGS has conducted under close supervision by marine-mammal biologists. In March 1998, the USGS used a large (6500 in^3; 106 liters) airgun array in and around Puget Sound to study the regional earthquake hazard. The USGS employed 12 biologists, who worked on two ships continuously to oversee airgun operations. On several occasions the USGS shut off the airguns when marine mammals entered safety zones that had been stipulated by NMFS under an Incidental Harassment Authorization (IHA), and, when mammals left these zones, the USGS gradually ramped up the array as required to avoid harming

wildlife. Marine-mammal biologists reported that, during the survey, no overt distress was evident among the dense marine mammal populations, and, afterward, no unexplained marine mammal strandings occurred.

In August 1998, the USGS surveyed offshore from Southern California, using a small airgun (40 in^3; 655 cm^3). Two marine mammal biologists oversaw this activity, and the survey the USGS proposes will be conducted with similar oversight.

Experimental Design

Marine studies conducted by the USGS focus on areas where natural hazards have their greatest potential impact on society. In Southern California, USGS studies will concern four areas. The first area in priority is the coastal zone and continental shelf between Los Angeles and San Diego, where much of the hazard appears to be associated with strike-slip faults, such as the Newport-Inglewood and Palos Verdes faults. The second study area lies offshore, in the Santa Monica, San Pedro, and San Diego Trough deeps, where rapid sedimentation has left a more complete record, relative to shallow-water areas, that the USGS can use to decipher earthquake history. The third area is the extension into the Santa Barbara Channel of major elements of onshore geology, including some large faults. The fourth area is the geologic boundary, marked generally by the Channel Islands, between the inner California Borderland (dominated by strike-slip faults) and the Santa Barbara Channel (dominated by compressional faults). The study proposed here focuses on the highest priority area, which lie near shore between Los Angeles and San Diego.

The seismic-reflection survey will last 14 days. From its experience collecting seismic-reflection data in this general area during 1998, the USGS has decided to conduct the 1999 survey sometime within the May through July window. The basis for this decision is its desire to avoid the gray whale migrations and the peak arrival of other mysticete whales during late summer.

The USGS has not yet determined the exact tracklines for the survey, but the USGS does know the areas where airgun use will be concentrated. Two of these areas are southwest and southeast of Los Angeles, and the third and largest one is west and northwest of San Diego. In these areas seismic-reflection data will be collected along a grid of lines that are about 2 km (1.2 mi) apart.

The USGS proposes to use a small airgun and 200-m (656–ft) long streamer to collect seismic-reflection data. The potential effect on marine mammals is from the airgun; mammals cannot become entangled in the streamer. The USGS will also use a low-powered, high-resolution seismic system to obtain detailed information about the very shallow geology. The seismic- reflection system will be aboard a vessel owned by a private contractor. Ocean-bottom seismometers will be deployed to measure the velocity of sound in shallow rocks to help unravel the recent history of fault motion. These seismometers are passive recorders and pose no threat to the environment.

Ship navigation will be accomplished using satellites of the Global Positioning System. The survey ship will be able to report accurate positions, which is important to mitigating the airgun's effect on marine mammals and to analyzing what impact, if any, airgun operations had on the environment.

The Seismic Sound Sources

During this survey the USGS will operate two sound sources--an airgun and a high-resolution Huntec(TM) system. The main sound source will be a single small airgun of special type called a generator-injector, or GI-gun (trademark of Seismic Systems, Inc., Houston, TX). This type of airgun consists of two small airguns within a single steel body. The two small airguns are fired sequentially, with the precise timing required to stifle the bubble oscillations that typify sound pulses from a single airgun of common type. These oscillations impede detailed analysis of fault and aquifer structure. For arrays consisting of many airguns, bubble oscillations are cancelled by careful selection of airgun sizes. The GI-gun is a mini-array that is carefully adjusted to achieve the desired bubble cancellation. Airguns and GI-guns with similar chamber sizes have similar peak output pressures.

The GI-gun for this survey has two equal-sized chambers of 35 in^3 (57 mm^3), and the gun will be fired every 12 seconds. Compressed air delivered to the GI-gun will have a pressure of about 3000 psi. The gun will be towed 12 meters (39.4 ft) behind the vessel and suspended from a float to maintain a depth of about 1 m (3.3 ft).

The manufacturer's literature indicates that a GI-gun of the size the USGS will use has a sound-pressure level (SPL) of about 220 dB re 1 μPa-m. In comparison, a 40–in^3 (65 mm^3) airgun has an SPL of 216 dB re 1 μPa-m (Richardson *et al.*, 1995). The GI-gun's output sound pulse has a duration of about 10 ms. The amplitude spectrum of this pulse, as shown by the manufacturer's data, indicates that most of the sound energy is at frequencies below 500 Hz. Field measurements by USGS personnel indicate that the GI-gun's output is low amplitudes at frequencies above 500 Hz. Thus high-amplitude sound from this source is at frequencies that are outside the main hearing band of odontocetes and pinnipeds (Richardson *et al.*, 1995).

The high-resolution Huntec(TM) system uses an electrically powered sound source. In operation, the sound producing and recording hardware are towed behind the ship near the seabottom. The unit emits sound about every 0.5 sec. This system provides highly detailed information about stratified sediment, so that dates obtained from fossils in sediment samples can be correlated with episodes of fault offset. The SPL for this unit is 210 dB re 1 μPa-m. The output-sound bandwidth is 0.5 kHz to 8 kHz, with the main peak at 4.5 kHz.

The Need for 24-hour Seismic Operations

Operating less than 24 hours each day incurs substantially increased cost for the leased ship, which the USGS cannot afford. The ship schedule provides a narrow time window for this project; other experiments are already scheduled to precede and follow this one. Thus, the USGS is not able arbitrarily to extend the survey time to include large delays for dark or poor visibility. Reasons for around-the-clock operation that benefit the environment are (1) when the airgun ceases to operate, marine mammals might move back into the survey area and incur an increased potential for harm when operations resume and (2) daylight-only operations prolong activities in a given area, thus increasing the likelihood that marine mammals will be harassed. The 1999 survey will require only 2 weeks, and it will be spread out geographically from Los Angeles to San Diego, so no single area will see long-term activity. In the view of the USGS, the best course is to complete the experiment as expeditiously as possible. For these reasons, the USGS requests that the IHA allow 24-hour operations.

Description of Habitat and Marine Mammals Affected by the Activity

The Southern California Bight supports a diverse assemblage of 29 species of cetaceans (whales, dolphins and porpoises) and 6 species of pinnipeds (seals and sea lions). The species of marine mammals that are likely to be present in the seismic research area include the bottlenose dolphin (*Tursiops truncatus*), common dolphin (*Delphinus delphis*), killer

whale (*Orcinus orca*), Pacific white-sided dolphin (*Lagenorhynchus obliquidens*), northern right whale dolphin (*Lissodelphis borealis*), Risso's dolphin (*Grampus griseus*), pilot whales (*Globicephala macrorhynchus*), Dall's porpoise (*Phocoenoides dalli*), sperm whale, humpback whale (*Megaptera novaengliae*), gray whale (*Eschrichtius robustus*), blue whale, minke whale (*Balaenoptera acutorostrata*), fin whales (*Balaenoptera physalus*), harbor seal (*Phoca vitulina*), elephant seal (*Mirounga angustirostris*), northern sea lion (*Eumetopias jubatus*), and California sea lion (*Zalophus californianus*), northern fur seal (*Callorhinus ursinus*) and sea otters (*Enhydra lutris*). General information on these latter species can be found in the USGS application and in Barlow *et al.* (1997). Please refer to those documents for information on the biology, distribution, and abundance of these species.

Potential Effects of Seismic Surveys on Marine Mammals

Discussion

Seismic surveys are used to obtain data about rock formations up to several thousands of feet deep. These surveys are accomplished by transmitting sound waves into the earth, which are reflected off subsurface formations and recorded with detectors in the water column. A typical marine seismic source is an airgun array, which releases compressed air into the water creating an acoustical energy pulse that is directed downward toward the seabed. Hydrophones spaced along a streamer cable just below the surface of the water receive the reflected energy from the subsurface formations and transmit data to the seismic vessel. Onboard the vessel, the signals are amplified, digitized, and recorded on magnetic tape.

Disturbance by seismic noise is the principal means of taking by this activity. Vessel noise may provide a secondary source. Also, the physical presence of vessel(s) could also lead to some non-acoustic effects involving visual or other cues.

Depending upon ambient conditions and the sensitivity of the receptor, underwater sounds produced by open-water seismic operations may be detectable some distance away from the activity. Any sound that is detectable is (at least in theory) capable of eliciting a disturbance reaction by a marine mammal or of masking a signal of comparable frequency. An incidental harassment take is presumed to occur when marine mammals in the vicinity of the seismic source (or vessel) react to the generated sounds or to visual cues.

Seismic pulses are known to cause some species of whales, including gray whales, to behaviorally respond within a distance of several kilometers (Richardson *et al.*, 1995). Although some limited masking of low-frequency sounds is a possibility for those species of whales using low frequencies for communication, the intermittent nature of seismic source pulses will limit the extent of masking. Bowhead whales, for example, are known to continue calling in the presence of seismic survey sounds, and their calls can be heard between seismic pulses (Richardson *et al.*, 1986).

When the received levels of noise exceed some behavioral reaction threshold, cetaceans will show disturbance reactions. The levels, frequencies, and types of noise that will elicit a response vary between and within species, individuals, locations and seasons. Behavioral changes may be subtle alterations in surface-dive-respiration cycles. More conspicuous responses include changes in activity or aerial displays, movement away from the sound source, or complete avoidance of the area. The reaction threshold and degree of response are related to the activity of the animal at the time of the disturbance. Whales engaged in active behaviors, such as feeding, socializing, or mating are less likely than resting animals to show overt behavioral reactions, unless the disturbance is directly threatening.

Hearing damage is not expected to occur during the project. While it is not known whether a marine mammal very close to the airgun would be at risk of permanent hearing impairment, temporary threshold shift is a theoretical possibility for animals very close to the airgun. However, planned monitoring and mitigation measures (described later in this document) are designed to detect marine mammals occurring near the seismic source(s) and to avoid, to the greatest extent practicable, exposing them to sound pulses that have any possibility of causing hearing damage.

Maximum Sound-Exposure Levels for Marine Mammals

At this time, the USGS lacks detailed measurement of sound-transmission loss for the southern California offshore, so the USGS estimated how SPL varies with distance from the airgun by assuming that sound decays according to 25log(R). The coefficient 25 accounts approximately for the attenuation that is caused by the sound interacting with the seabottom. The USGS used this procedure to derive safety zone estimates based on the 220 dB SPL produced by the GI-gun, the larger of the two sound sources the USGS plans to use.

Loud continuous sounds can damage the hearing of marine mammals. However, the adverse effects of sound on mammals have been documented for exposure times that last for tens of seconds or minutes, but effects have not been documented for the brief pulses typical of the GI-gun (10 ms) and the Huntec(TM) system (0.3 ms). NMFS considers that the maximum SPLs to which marine mammals can be exposed from impulse sounds are 180 dB re 1 μPa-m RMS for mysticetes and sperm whales, and 190 dB re 1 μPa-m RMS for odontocetes and pinnipeds.

Assuming that the 25LogR decay that the USGS used to estimate safe distances from the airgun is correct, this indicates that an SPL of 190 dB re 1 μPa-m is attained about 16 m (52.5 ft) away from the airgun, and an SPL of 180 dB re 1 μPa-m is attained at about 40 m (131 ft) away. However, for precautionary reasons during field operations, the USGS proposes that, at all times, the safe distance for odontocetes and pinnipeds be 50 m (164 ft) and for mysticetes, 100 m (328 ft).

Estimated Number of Potential Harassments of Marine Mammals

The zone of influence for the GI-gun is defined to be the circle whose radius is the distance from the gun where the SPL reduces to 160 dB re 1 μPa-m. For the assumed 25LogR, the zone of influence is a circle with a radius of 250 m (820 ft). Based on estimated marine mammal populations within the survey area and on the number of individuals that were observed during the 1998 survey, the USGS estimates that up to 5 killer whales, 10 minke whales, 10 sea otters, 50 northern sea lions, 100 northern fur seals, 100 northern elephant seals, 100 Dall's porpoise, 100 Risso's dolphins, 100 northern right-whale dolphins, 100 Pacific white-sided dolphins, 100 bottlenosed dolphins, 200 California sea lions, 200 Pacific harbor seals, and 6,000 common dolphins may be harassed incidental to the USGS survey. No marine mammals will be seriously injured or killed as a result of the survey.

Proposed Mitigation of Potential Environmental Impact

To avoid potential harassment of marine mammals, a safety zone will be established and monitored continuously by biologists, and the USGS will shut off the airguns whenever the ship and a marine mammal converge closer than

the previously mentioned safety distance. For pinnipeds, if the seismic vessel approaches a pinniped, the 50 m (164 ft) safety radius will be maintained; however, if a pinniped approaches the towed airgun, NMFS proposes that it will not require the USGS to shutdown the airgun, but will require the USGS to monitor the interaction to ensure the animal does not show signs of distress. Experience indicates that pinnipeds will come from great distances to inspect seismic operations. Seals have been observed swimming within airgun bubbles, 10 m (33 ft) away from active arrays, apparently unaffected. Although airgun oprations will be terminated if the pinnipeds show obvious distress, the USGS will conduct observations on effects the airguns may have on the animals.

The USGS plans to have marine biologists aboard the ship who will have the authority to stop airgun operations when a mammal enters the safety zone.

During seismic-reflection surveying, the ship's speed will only be 4 to 5 knots, so that when the airgun is being discharged, nearby marine mammals will have gradual warning of the vessel's approach and can move away. Finally, NMFS will coordinate with the local stranding network to determine whether strandings can be related to the seismic operation.

Monitoring and Reporting

Biologists who oversaw the previous USGS airgun surveys were affiliated with the Cascadia Research Collective in Olympia, Washington. Because of their experience with the operations, the USGS prefer to employ these scientists again, but this preference is subject to contracting arrangements.

Monitoring marine mammals while the airguns are active will be conducted 24 hours each day. Two trained marine mammal observers will be aboard the seismic vessel to mitigate the potential environmental impact from airgun use and to gather data on the species, number, and reaction of marine mammals to the airgun. Each observer will work 6 hours during daylight and 6 hours at night. During daylight, observers will use 7x50 binoculars with internal compasses and reticules to record the horizontal and vertical angle to sighted mammals. Night-time operations will be conducted with a commercial hand-held light magnification scope. Monitoring data to be recorded during airgun operations include the observer on duty, weather conditions (such as Beaufort sea state, wind speed, cloud cover, swell height, precipitation, and visibility). For each mammal sighting, the observer will record the time, bearing and reticule readings, species, group size, and the animal's surface behavior and orientation. Observers will instruct geologists to shut off the airgun array whenever a marine mammal enters its respective safety zone.

Possible Modifications or Alternatives to the Proposed Survey

The instructions for this permit request stipulate that the USGS consider alternatives to the proposed experiment. Options to change the activity are limited, but the USGS might conduct it in some other way, such as with a low-powered source or in a different season.

To abandon this study altogether is a poor option. In the introductory section of this application, the USGS described the societal relevance of this project and the benefits to scientists in understanding the regional earthquake hazard and to city planners in establishing building codes. Another facet of this study is understanding coastal aquifers and knowing how to stem the intrusion of salt water into them. If the project were canceled, such information would be unavailable.

The source strength might be reduced to limit the environmental impact. However, the proposed airgun size is already small, and the problem with this option is that the USGS cannot significantly reduce the source strength without jeopardizing the success of this survey. This judgment is based on USGS decades-long experience with seismic-reflection surveys, but especially on the 1998 survey that was conducted in the same general area as outlined here. If the USGS were to reduce the airgun size and then fail to obtain the required information, another survey would need to be conducted, and this would double the potential impact on marine mammals.

This project could be carried out at some other time of year, and the USGS is open to suggestions. In this pursuit, the USGS talked with biologists to find out the best time for the project to be conducted. The USGS wants to avoid the gray whale migrations and the mid-summer arrival of other mysticete species because, while these other species remain mostly in the area of the Channel Islands, some individuals venture closer to the mainland. An important point is that biologists can best prevent harm to mammals when daylight is long, that is, near the solstice.

Consultation

Under section 7 of the Endangered Species Act, NMFS has begun consultation on the proposed issuance of an IHA. Consultation will be concluded upon completion of the comment period and consideration of those comments in the final determination on issuance of an authorization.

Conclusions

NMFS has preliminarily determined that the short-term impact of conducting marine seismic-reflection data in offshore southern California will result, at worst, in a temporary modification in behavior by certain species of pinnipeds and cetaceans. While behavioral modifications may be made by certain species of marine mammals to avoid the resultant noise from the seismic airgun, this behavioral change is expected to have a negligible impact on the animals.

In addition, no take by injury and/or death is anticipated, and takes will be at the lowest level practicable due to the incorporation of the mitigation measures previously mentioned. No known rookeries, mating grounds, areas of concentrated feeding, or other areas of special significance for marine mammals occur within or near the planned area of operations during the season of operations.

Proposed Authorization

NMFS proposes to issue an IHA to the USGS for the possible harassment of small numbers of several species of marine mammals incidental to collecting marine seismic-reflection data offshore from southern California, provided the above-mentioned mitigation, monitoring, and reporting requirements are incorporated. NMFS has preliminarily determined that the proposed activities would result in the harassment of only small numbers of each of several species of marine mammals and will have no more than a negligible impact on these marine mammal stocks.

Information Solicited

NMFS requests interested persons to submit comments, information, and suggestions concerning this request (see **ADDRESSES**).

Dated: March 1, 1999.

P. Michael Payne,

Acting Deputy Director, Office of Protected Resources, National Marine Fisheries Service.

[FR Doc. 99–5497 Filed 3–4–99; 8:45 am]

BILLING CODE 3510–22–F

DEPARTMENT OF COMMERCE

National Oceanic and Atmospheric Administration

[I.D. 022399A]

Marine Mammals; File No. 782–1447–02

AGENCY: National Marine Fisheries Service (NMFS), National Oceanic and Atmospheric Administration (NOAA), Commerce.

ACTION: Issuance of permit amendment.

SUMMARY: Notice is hereby given that the National Marine Mammal Laboratory, NMFS, 7600 Sand Point Way, NE, BIN C15700, Bldg. 1, Seattle, WA 98115–0070 has been issued an amendment to scientific research Permit No. 782–1447.

ADDRESSES: The amendment and related documents are available for review upon written request or by appointment in the following office(s):

Permits and Documentation Division, Office of Protected Resources, NMFS, 1315 East-West Highway, Room 13705, Silver Spring, MD 20910 (301/713–2289); and

Regional Administrator, Alaska Region, National Marine Fisheries Service, NOAA, P.O. Box 21668, Juneau, AK 99802–1668 (907/586–7221).

FOR FURTHER INFORMATION CONTACT: Sara Shapiro or Ruth Johnson, 301/713–2289.

SUPPLEMENTARY INFORMATION: On January 14, 1999, notice was published in the **Federal Register** (64 FR 2472) that an amendment of Permit No. 782–1447, issued May 20, 1998 (63 FR 30201), had been requested by the above-named organization. The requested amendment has been granted under the authority of the Marine Mammal Protection Act of 1972, as amended (16 U.S.C. 1361 *et seq.*), the provisions of § 216.39 of the Regulations Governing the Taking and Importing of Marine Mammals (50 CFR part 216), the Endangered Species Act of 1973, as amended (ESA; 16 U.S.C. 1531 *et seq.*), the provisions of § 222.25 of the regulations governing the taking, importing, and exporting of endangered fish and wildlife (50 CFR 222.23), and the Fur Seal Act of 1966, as amended (16 U.S.C. 1151 *et seq.*).

Permit No. 782–1447 authorizes the National Marine Mammal Laboratory to: count, capture, handle, flipper tag, blood sample, and biopsy sample Steller sea lion pups (*Eumetopias jubatus*); dart biopsy adult and juvenile Steller sea lions; and disturb Stellers of all ages through aerial surveys over a two-year period. Research activities are scheduled to take place in Alaska. In addition, the Holder is authorized to disturb a small number of northern fur seals (*Callorhinus ursinus*) on Bogoslof Island during aerial surveys.

This amendment now authorizes the Holder to: (1) conduct aerial surveys in February and March; (2) collect 25 cc blood from young-of-the-year and capture and handle all pups from March through July; and (3) administer Valium (5 mg/ml) to restrained sea lions as needed to minimize the potential for injury to animals and handlers.

Issuance of this amendment, as required by the ESA was based on a finding that such permit (1) was applied for in good faith, (2) will not operate to the disadvantage of the endangered species which is the subject of this permit, and (3) is consistent with the purposes and policies set forth in section 2 of the ESA.

Dated: February 26, 1999.

Ann D. Terbush,

Chief, Permits and Documentation Division, Office of Protected Resources, National Marine Fisheries Service.

[FR Doc. 99–5500 Filed 3–4–99; 8:45 am]

BILLING CODE 3510–22–F

DEPARTMENT OF COMMERCE

National Oceanic and Atmospheric Administration

[I.D. 021199B]

Marine Mammals; File No. P368F

AGENCY: National Marine Fisheries Service (NMFS), National Oceanic and Atmospheric Administration (NOAA), Commerce.

ACTION: Issuance of permit amendment.

SUMMARY: Notice is hereby given that Dr. James T. Harvey, Associate Professor, Moss Landing Marine Laboratories, P.O. Box 450, Moss Landing, CA 95039–0450, has been issued an amendment to scientific research Permit No.974 (File No. P368F).

ADDRESSES: The amendment and related documents are available for review upon written request or by appointment in the following office(s):

Permits and Documentation Division, Office of Protected Resources, NMFS, 1315 East-West Highway, Room 13705, Silver Spring, MD 20910 (301/713–2289); and

Regional Administrator, Southwest Region, National Marine Fisheries Service, NOAA, 501 West Ocean Blvd., Suite 4200, Long Beach, CA 90802–4213 (562/980–4001).

FOR FURTHER INFORMATION CONTACT: Sara Shapiro or Ruth Johnson, 301/713–2289.

SUPPLEMENTARY INFORMATION: On June 30, 1998, notice was published in the **Federal Register** (63 FR 35568) that an amendment of Permit No. 974, issued August 25, 1995 (60 FR 46577), had been requested by the above-named individual. The requested amendment has been granted under the authority of the Marine Mammal Protection Act of 1972, as amended (16 U.S.C. 1361 *et seq.*) and the provisions of § 216.39 of the Regulations Governing the Taking and Importing of Marine Mammals (50 CFR part 216).

Permit No. 974 authorizes the permit holder to: determine body fat of harbor seals (*Phoca vitulina*); handle 20 harbor seal pups up to four times and 80 pups one time annually to track changes in health, physiological condition, and diving behavior; handle 20 adults and 20 juveniles four times annually to determine seasonal shifts in health, physiological condition, and diving behavior; and harass 600 harbor seals as a result of the above activities. The permit holder is now authorized to increase: 1) the total number of takes of non-pups and 2) the number of seals to be inadvertently harassed during scat collection.

Dated: March 2, 1999.

Ann D. Terbush,

Chief, Permits and Documentation Division, Office of Protected Resources, National Marine Fisheries Service.

[FR Doc. 99–5502 Filed 3–4–99; 8:45 am]

BILLING CODE 3510–22–F

CONSUMER PRODUCT SAFETY COMMISSION

[CPSC Docket No. 99–C0004]

Carter Brothers Manufacturing Co., Inc., a Corporation; Provisional Acceptance of a Settlement Agreement and Order

AGENCY: Consumer Product Safety Commission.

ACTION: Notice.

SUMMARY: It is the policy of the Commission to publish settlements which it provisionally accepts under the Consumer Product Safety Act in the **Federal Register** in accordance with the terms of 16 CFR 1118.20(e). Published below is a provisionally-accepted Settlement Agreement with Carter Brothers Manufacturing Co., Inc., a corporation, containing a civil penalty of $125,000.

DATES: Any interested person may ask the Commission not to accept this agreement or otherwise comment on its contents by filing a written request with

the Office of the Secretary by March 20, 1999.

ADDRESSES: Person wishing to comment on this Settlement Agreement should send written comments to the Comment 99–C0004, Office of the Secretary, Consumer Product Safety Commission, Washington, DC 20207.

FOR FURTHER INFORMATION CONTACT: Ronald G. Yelenik, Trial Attorney, Office of Compliance and Enforcement, Consumer Product Safety Commission, Washington, DC 20207; telephone (301) 504–0626, 1346.

SUPPLEMENTARY INFORMATION: The text of the Agreement and Order appears below.

Dated: March 1, 1999.

Sadye E. Dunn,

Secretary.

Settlement Agreement and Order

1. This Settlement Agreement and Order, entered into between Carter Brothers Manufacturing Co., Inc. (''Carter Brothers'' or ''Respondent''), and the staff of the Consumer Product Safety Commission (''staff''), pursuant to the procedures set forth in 16 CFR 1118.20, is a compromise resolution of the matter described herein, without a hearing or determination of issues of law and fact.

The Parties

2. The staff is the staff of the Consumer Product Safety Commission (''Commission''), an independent federal regulatory agency of the United States government, established by Congress pursuant to section 4 of the Consumer Product Safety Act ''(CPSA''), as amended, 15 U.S.C. 2053.

3. Respondent Carter Brothers is a corporation organized and existing under the laws of the State of Alabama with its principal corporate offices located in Brundidge, Alabama. Respondent is a manufacturer of go-carts and lawn mowers.

Staff Allegations

4. Section 15(b) of the CPSA, 15 U.S.C. 2064(b) requires a manufacturer of a consumer product who, inter alia, obtains information that reasonably supports the conclusion that the product contains a defect which could create a substantial product hazard or creates an unreasonable risk of serious injury or death, to immediately inform the Commission of the defect or risk.

5. Between October 1992 and March 1995, Carter Brothers, manufactured and sold, approximately 1,700 model 2535 go-carts (''go-carts(s)''). A go-cart is a ''consumer product'' and Carter Brothers is a ''manufacturer'' of a ''consumer product,'' which is ''distributed in commerce'' as those terms are defined in sections 3(a)(1), (4), (11) of the CPSA, 15 U.S.C. 2052(a)(1), (4), (11).

6. The go-carts are defective because there is an open space between the engine and the belt-chain guard, which covers the drive shaft mechanism. Hair and clothing entrapment is possible in the open space around the belt-chain guard, which could lead to serious injury or death.

7. On July 26, 1994, Carter Brothers learned of an incident in which a nine-year old girl was killed when her hair became entangled in the drive shaft mechanism of the go-cart.

8. On July 28, 1994, Carter Brothers became aware of another hair entanglement incident involving the go-cart in which a young girl sustained a fractured skull.

9. Between August 1994 and February 1996, Carter Brothers made several design and material changes to the go-cart and engaged in a corrective action and notice program in an attempt to address the problem in question.

10. Not until May 17, 1996, after receiving a letter from the staff requesting generic information about go-dart entrapment incidents, did Carter Brothers provide any information about the go-carts. However, the information provided by Respondent at this time was very limited in nature.

11. Although Carter Brothers had obtained sufficient information to reasonably support the conclusion that these go-carts contained a defect which could create a substantial product hazard, or created an unreasonable risk of serious injury or death, it failed to report such information to the Commission, as required by section 15(b) of the CPSA. This is a violation of section 19(a)(4) of the CPSA, 15 U.S.C. 2068(a)(4).

12. Carter Brother's failure to report to the Commission, as required by section 15(b) of the CPSA, was committed ''knowingly,'' as that term is defined in section 20(d) of the CPSA, and Respondent is subject to civil penalties under section 20 of the CPSA.

Response of Carter Brothers

13. Carter Brothers denies it violated the CPSA.

Agreement of the Parties

14. The Commission has jurisdiction over this matter under the CPSA, 15 U.S.C. 2051–2084.

15. Carter Brothers agrees to pay to the Commission a civil penalty in the amount of one hundred twenty five thousand dollars ($125,000) payable as follows: $41,666.66 within 20 days of the service of the Final Order upon Respondent, $41,666.66 three months thereafter, and an additional $41,666.66 three months after that.

16. Respondent knowingly, voluntarily and completely waives any rights it may have (1) to an administrative or judicial hearing, (2) to judicial review or other challenge or contest of the validity of the Commissions's Order, (3) to a determination by the Commission as to whether Respondent failed to comply with section 15(b) of the CPSA, as alleged, (4) to a statement of findings of fact and conclusions of law, and (5) to any claims under the Equal Access to Justice Act.

17. Upon provisional acceptance of this Settlement Agreement and Order by the Commission, this Settlement Agreement and Order shall be placed on the public record and shall be published in the **Federal Register** in accordance with the procedures set forth in 16 CFR 1118.20(e). If the Commission does not receive any written request not to accept the Settlement Agreement and order within 15 days, the Settlement Agreement and Order shall be deemed finally accepted on the 16th day after the date it is published in the **Federal Register**, in accordance with 16 CFR 1118.20(f).

18. This Settlement Agreement and Order becomes effective upon its final acceptance by the Commission and service upon Respondent.

19. For purposes of section 6(b) of the CPSA, 15 U.S.C. 2055(b), this matter shall be treated as if a complaint had issued, and the Commission may publicize the terms of the Settlement Agreement and Order.

20. The provisions of this Settlement Agreement and Order shall apply to Respondent, its successors and assigns, agents, representatives, and employees, directly or through any corporation, subsidiary, division, or other business entity, or through any agency, device or instrumentality.

21. Carter Brothers agrees to immediately inform the Commission if it learns of any additional incidents involving the go-carts, or any additional information regarding the alleged defect and hazard identified in paragraph six, herein.

22. Nothing in this Settlement Agreement and Order shall be construed to preclude the Commission from pursuing a corrective action or other relief not described above.

23. This Settlement Agreement may be used in interpreting the Order. Agreements, understandings, representations, or interpretations made

outside of this Settlement Agreement and Order may not be used to vary or contradict its terms.

Dated: January 5, 1999.

Stuart W. Arn,

President, Carter Brothers Mfg. Co., Inc.

The Consumer Product Safety Commission

Alan H. Schoem,

Assistant Executive Director, Office of Compliance.

Eric L. Stone,

Director, Legal Division, Office of Compliance.

Dated: January 22, 1999.

Ronald G. Yelenik,

Trial Attorney, Legal Division, Office of Compliance.

Order

Upon consideration of the Settlement Agreement between Respondent Carter Brothers Manufacturing Co., Inc., a corporation, and the staff of the Consumer Product Safety Commission, and the Commission having jurisdiction over the subject matter and over Carter Brothers Manufacturing Co., Inc., and it appearing the Settlement Agreement is in the public interest, it is

Ordered, that the Settlement Agreement be and hereby is accepted, and it is

Ordered, that Carter Brothers Manufacturing Co., Inc. shall pay to the order of the U.S. Treasury a civil penalty in the amount of one hundred twenty five thousand dollars ($125,000), payable as follows: $41,666.66 within 20 days of the service of the Final Order upon Respondent, $41,666.67 three months thereafter, and an additional $41,666.67 three months after that.

Upon failing to make a payment or upon making a payment that is at least five days late, the outstanding balance of the civil penalty shall become due and payable by Carter Brothers Manufacturing Co., Inc., and the interest on the outstanding balance shall accrue and be paid at the federal legal rate of interest under the provisions of 28 U.S.C. sections 1961 (a) and (b).

Further ordered, Carter Brothers Manufacturing Co., Inc. shall immediately inform the Commission if it learns of any additional incidents involving the go-carts, or any additional information regarding the alleged defect and hazard identified herein.

Provisionally accepted and Provisional Order issued on the 1st day of March, 1999.

By Order of the Commission.

Sadye E. Dunn,

Secretary, Consumer Product Safety Commission.

[FR Doc. 99–5408 Filed 3–4–99; 8:45 am]

BILLING CODE 6355–01–M

DEPARTMENT OF DEFENSE

Department of the Army, Corps of Engineers

Jackson Port Environmental Impact Statement (EIS) for Proposed Public Port Facilities on the Tombigbee River at the City of Jackson, in Clarke County, Alabama

AGENCY: U.S. Army Corps of Engineers, Mobile District, DoD.

ACTION: Notice of availability.

SUMMARY: This Notice of Availability announces the public release of the Draft (EIS) for the Proposed Public Port Facilities on the Tombigbee River at the City of Jackson, in Clarke County, Alabama. This Draft EIS has been prepared and released for public review and comment in compliance with the National Environmental Policy Act (40 Code of Federal Regulation, parts 1500–1508). The comment period begins March 5, 1999 and extends to April 19, 1999. The actions proposed and analyzed in the EIS include the construction of a spur canal and port facilities off the Black Warrior-Tombigbee River Federal navigation channel in Jackson, Alabama. The Federal construction of the spur canal would facilitate construction of a public port facility by the City of Jackson pursuant to authorization by a Department of the Army permit. It identifies existing environmental conditions at the City of Jackson's proposed port site and analyzes the impacts of the U.S. Army Corps of Engineers proposed construction of a Federal spur canal at the site, as well as the City of Jackson's proposed phased port development under a Department of the Army permit application. The potential impacts analyzed in the Draft EIS include impacts to water resources, ecological resources, cultural resources, and sociological resources. The principal objective of the EIS is to provide a complete, objective appraisal of the positive and negative impacts of the proposed overall port development action (including both Federal and non-Federal components), and mitigation alternatives.

FOR FURTHER INFORMATION CONTACT: Beverley Stout, Jackson Port EIS Project Coordinator, U.S. Army Corps of Engineers, Mobile District, CESAM–PD–EI, Post Office Box 2288, Mobile AL 36602–0001, phone number (334) 694–4637, facsimile number (334) 694–3815, or e-mail address (Beverley.H.Statut@sam.usace.army.mil).

SUPPLEMENTARY INFORMATION: The purpose of the EIS is to provide sufficient information to support a decision by the Mobile District Engineer for construction of Federal navigation facilities which would provide for development of a public port on the Tombigbee River, at Jackson, Clarke County, Alabama; and to support a decision by the District Engineer on issuance of a Section 10 and Section 404 permit to the City of Jackson Industrial Development board for construction of the ancillary port development facilities adjacent to the Federal navigation facilities. The proposed alternatives are divided into two Federal project alternatives (FP–A and FP–B) and three City of Jackson Alternatives. There are also three no action alternatives. The purpose of both of the Federal project alternatives is to expand the existing barge slop to a 300-foot-wide by 1000-foot-long spur canal to provide navigation facilities to support a public port facility at Jackson, Alabama. This would include suitable disposal areas to accommodate construction and future maintenance dredging. Alternative FP–A has a total development area of 140.0 acres and alternative FP–B has a total development area of 121.6 acres. The total wetland development areas for alternatives FP–A and FP–B are 18.3 acres and 10.1 acres, respectively. The City of Jackson plans to completely develop the Jackson Port through three proposed Jackson Port phases. The purpose of the City of Jackson's proposed port development is to provide ancillary port infrastructure to accommodate berthing, docking and terminal facilities, and transloading/temporary storage areas for industrial users requiring port-related facilities. The port-related facilities would be adjacent to the Federal spur canal. The City of Jackson project would also accommodate disposal of materials associated with construction and future maintenance of the vessel berthing areas. The three Jackson Port phases would involve continuing development and expansion to the Federal projects. Jackson Port Phase 1, Jackson Port Phase 2, and Jackson Port Phase 3 have total development areas of 206.4 acres, 235.0 acres, and 343.5 acres, respectively. The total wetland development areas for these phases are 70.0 acres, 94.2 acres, and 189.1 acres, respectively. The three no action alternatives are No Federal Project/No City Project (No Action Alternative (1); No Federal Project/City Project constructed (No Action Alternative (2); and Federal Project constructed/No City Project (No Action Alternative (3). No Action Alternative 1

could develop 76.9 acres of available expansion area under an existing Department of the Army permit which includes 1.0 acre of wetlands; No Action Alternative 2 would develop 125.8 acres which includes 3.3 acres of wetlands; and No Action Alternative 3 would include the development of one of the Federal project alternatives.

The scope of the Federal project is defined by Public Law 99–591 and House Report 99–831. A Notice of Intent to prepare the EIS was published in the **Federal Register** on August 16, 1991. A scoping meeting was held at City Hall in Jackson, Alabama on September 16, 1991. Executive Orders requiring analyses of proposed Federal actions were followed.

Draft EIS Availability: To receive a copy of the Draft EIS, contact U.S. Army Corps of Engineers, Mobile District, CESAM–PD–EI, Post Office Box 2288, Mobile, AL 36602–0001. A copy of the Draft EIS will also be available for public review at the Jackson public library.

Comment Period: The public comment period for the Draft EIS begins March 5, 1999 with the release of this Notice of Availability, and extends to April 19, 1999. Written comments may be submitted to the Corps of Engineers by mail, facsimile, or electronic mail. To become part of the formal record, all written comments must be postmarked, faxed, or e-mailed no later than April 19, 1999. Comments should be addressed to: U.S. Army Corps of Engineers, Mobile District, CESAM–PD–EI, Post Office Box 2288, Mobile AL 36602–0001. The facsimile number is: (334) 695–3815 and the e-mail address is: *Beverley.H.Stout@sam.usace.army.mil.* In addition to this Notice of Availability, a press release will be prepared, announcements will be mailed to affected State and Federal agencies and special interest groups, information fliers will be distributed announcing the release of the Draft EIS and inviting the public to participate in a public meeting, and the public meeting will be advertised twice in a local newspaper. The public meeting is scheduled for 6:00 p.m. on April 6, 1999 at Jackson City Hall, 400 Commerce Street, Jackson, Alabama, 36545. Written or oral comments may be presented at this time. Following the receipt of public comments, a Final EIS will be prepared and issued which will consider the comments received.

Curtis M. Flakes,

Chief, Planning and Environmental Division.

[FR Doc. 99–5271 Filed 3–4–99; 8:45 am]

BILLING CODE 3710–CR–M

DEPARTMENT OF EDUCATION

Submission for OMB Review; Comment Request

AGENCY: Department of Education.

SUMMARY: The Acting Leader, Information Management Group, Office of the Chief Information Officer invites comments on the submission for OMB review as required by the Paperwork Reduction Act of 1995.

DATES: Interested persons are invited to submit comments on or before April 5, 1999.

ADDRESSES: Written comments should be addressed to the Office of Information and Regulatory Affairs, Attention: Danny Werfel, Desk Officer, Department of Education, Office of Management and Budget, 725 17th Street, NW, Room 10235, New Executive Office Building, Washington, DC 20503 or should be electronically mailed to the internet address DWERFEL@OMB.EOP.GOV. Requests for copies of the proposed information collection requests should be addressed to Patrick J. Sherrill, Department of Education, 400 Maryland Avenue, SW, Room 5624, Regional Office Building 3, Washington, DC 20202–4651, or should be electronically mailed to the internet address *Pat Sherrill@ed.gov*, or should be faxed to 202–708–9346.

FOR FURTHER INFORMATION CONTACT: Patrick J. Sherrill (202) 708–8196. Individuals who use a telecommunications device for the deaf (TDD) may call the Federal Information Relay Service (FIRS) at 1–800–877–8339 between 8 a.m. and 8 p.m., Eastern time, Monday through Friday.

SUPPLEMENTARY INFORMATION: Section 3506 of the Paperwork Reduction Act of 1995 (44 U.S.C. Chapter 35) requires that the Office of Management and Budget (OMB) provide interested Federal agencies and the public an early opportunity to comment on information collection requests. OMB may amend or waive the requirement for public consultation to the extent that public participation in the approval process would defeat the purpose of the information collection, violate State or Federal law, or substantially interfere with any agency's ability to perform its statutory obligations. The Acting Leader, Information Management Group, Office of the Chief Information Officer, publishes that notice containing proposed information collection requests prior to submission of these requests to OMB. Each proposed information collection, grouped by office, contains the following: (1) Type of review requested, e.g. new, revision, extension, existing or reinstatement; (2) Title; (3) Summary of the collection; (4) Description of the need for, and proposed use of, the information; (5) Respondents and frequency of collection; and (6) Reporting and/or Recordkeeping burden. OMB invites public comment at the address specified above. Copies of the requests are available from Patrick J. Sherrill at the address specified above.

Dated: March 1, 1999.

William E. Burrow,

Acting Leader, Information Management Group, Office of the Chief Information Officer.

Office of Vocational and Adult Education

Type of Review: New.

Title: Application for Grants Under the Community Technology Centers Program.

Frequency: Annually.

Affected Public: Businesses or other for-profits; Not-for-profit institutions; State, local or Tribal Gov't, SEAs and LEAs.

Reporting and Recordkeeping Hour Burden:

Responses: 800.

Burden Hours: 32,000.

Abstract: The application package includes the information needed to apply for grants under the Community Technology Centers Program.

This information collection is being submitted under the Streamlined Clearance Process for Discretionary Grant Information Collections (1890–0001). Therefore, the 30-day public comment period notice will be the only public comment notice published for this information collection.

[FR Doc. 99–5450 Filed 3–4–99; 8:45 am]

BILLING CODE 4000–01–P

DEPARTMENT OF EDUCATION

Office of Educational Research and Improvement (OERI)

[CFDA No: 84.305T]

National Research Institutes' Field-Initiated Studies (FIS) Research Grant Program; Notice of Application Review Procedures for OERI Fiscal Year 1999 FIS Grants.

SUMMARY: On December 14, 1998, the Secretary published in the **Federal Register** (63 FR 68985) a notice inviting applications for new awards for fiscal year 1999 for the FIS Research Grant Program. On January 28, 1999, the Secretary published in the **Federal Register** (64 FR 4401) a notice extending

the deadline date for the receipt of applications and applications availability date for this program. This notice explains the procedures that will be used in reviewing applications.

SUPPLEMENTARY INFORMATION: The Secretary advises potential applicants of the following two tier review process that will be used by the FIS Program for this year's competition. This two tier process modifies the review procedures established in 34 CFR 700.21. The regulations in 34 CFR Part 700 otherwise remain in effect.

Application Review Procedure

Tier I. At the Tier I level, each application will be assigned to at least three reviewers who are selected according to the appropriateness of their expertise and experience and who specifically meet the qualifications for reviewers established in the regulations at 34 CFR 700.11. Reviewers will evaluate the assigned applications in accordance with the three equally weighted selection criteria established in the application package: (1) National Significance; (2) Project Design; and (3) Personnel. Reviewers will rate the assigned applications as either: ''Excellent'' (outstanding, deserves highest priority for support); ''Very Good'' (high quality proposal in nearly all aspects; should be supported if at all possible); ''Good'' (a quality proposal, worthy of support); ''Fair'' (proposal lacking in one or more critical aspects-key issues need to be addressed); or ''Poor'' (proposal has serious deficiencies). A conference call will be arranged for each review panel to discuss their assigned proposals and their rankings.

Based on the Tier I reviews, the top 60 applications will advance to the Tier II review. The top 60 will be determined by assigning a score of ''2'' for every ''excellent'' rating the application receives, a score of ''1'' for each ''very good'' rating the application receives and a score of ''0'' for any other rating. The application will then be ranked by total score. In the event of a tie at the 60th rank all such tied applications will advance to the Tier II review.

Tier II. Each application that advances to the Tier II level will be read by 25 Tier II reviewers, with written reviews completed by at least 3 reviewers. These reviewers will meet the qualifications for reviewers established in 34 CFR 700.11. The Tier II reviewers will apply the same selection criteria and the same rating system used in Tier I.

The Tier II reviewers will meet in Washington, DC. During this time, each application will be discussed in turn, with the three reviewers who have completed written reviews leading the discussion. Following the discussion of each application, all reviewers will assign a final rating to the application.

When all the applications from Tier II have been discussed and reviewers have completed their evaluations, OERI staff will rank the applications to form the recommended slate to be sent forward to the Assistant Secretary. The slate will be formed as follows. An application will receive a score of 2 for each ''Excellent'' rating it receives and a score of 1 for each ''Very Good'' rating it receives. The applications will then be ranked by total score. In the event that a set of applications surrounding the funding cutoff point have an identical score, the Assistant Secretary will determine which applications from that set contribute most to the mission of OERI.

Waiver of Proposed Rulemaking

In accordance with the Administrative Procedure Act (5 U.S.C. 553), it is the practice of the Secretary to offer interested parties the opportunity to comment on proposed regulations. However, since this notice merely establishes procedural requirements for review of applications and does not create substantive policy, proposed rulemaking is not required under 5 U.S.C. 553(b) (A).

(The valid OMB control number for this collection of information is 1850–0601.)

FOR FURTHER INFORMATION CONTACT: Veda Bright, Office of Educational Research and Improvement, U.S. Department of Education, 555 New Jersey Avenue, NW, Room 604, Washington, DC 20208, or by e-mail at veda__bright@ed.gov or by telephone at (202) 219–1935. Individuals who use a telecommunications device for the deaf (TDD) may call the Federal Information Relay Service (FIRS) at 1–800–877–8339 between 8 a.m. and 8 p.m. Eastern time, Monday through Friday.

Individuals with disabilities may obtain this document in an alternate format (e.g., Braille, large print, audiotape, or computer diskette) on request to the contact person listed in the preceding paragraph.

Electronic Access to This Document

Anyone may view this document, as well as all other Department of Education documents published in the **Federal Register**, in text or portable document format (pdf) via the Internet at either of the following sites:

http://ocfo.ed.gov/fedreg.htm

http://www.ed.gov/news.html

To use the pdf you must have the Adobe Acrobat Reader Program with Search, which is available free at either of the previous sites. If you have questions about using the pdf, call the U.S. Government Printing Office at (202) 512–1530 or, toll free, at 1–888–293–6498.

Anyone may also view these documents in text copy only on an electronic bulletin board of the Department. Telephone: (202) 219–1511, or toll free, 1–800–222–4922. The documents are located under Option G—Files/Announcements, Bulletins and Press Releases.

Note: The official version of a document is the document published in the **Federal Register**.

Program Authority: 20 U.S.C. 6031(c)(2)(B).

Dated: March 1, 1999.

C. Kent McGuire,

Assistant Secretary for Educational Research and Improvement.

[FR Doc. 99–5449 Filed 3–4–99; 8:45 am]

BILLING CODE 4000–01–P

DEPARTMENT OF ENERGY

Environmental Management Site-Specific Advisory Board, Rocky Flats

AGENCY: Department of Energy.

ACTION: Notice of open meeting.

SUMMARY: Pursuant to the provisions of the Federal Advisory Committee Act (Public Law 92–463, 86 Stat. 770) notice is hereby given of the following Advisory Committee meeting: Environmental Management Site-Specific Advisory Board (EM SSAB), Rocky Flats

DATES: Monday, March 15, 1999 6:30 p.m.—9:30 p.m.

ADDRESSES: College Hill Library, (Front Range Community College), 3705 West 112th Avenue, Westminster, CO.

FOR FURTHER INFORMATION CONTACT: Ken Korkia, Board/Staff Coordinator, EM SSAB-Rocky Flats, 9035 North Wadsworth Parkway, Suite 2250, Westminster, CO 80021, phone: (303) 420–7855, fax: (303) 420–7579.

SUPPLEMENTARY INFORMATION: *Purpose of the Board:* The purpose of the Board is to make recommendations to DOE and its regulators in the areas of environmental restoration, waste management, and related activities.

Tentative Agenda

1. The Board will conduct its final discussion and finalize recommendation(s) on building rubble.

2. Other Board business will be conducted as necessary.

Public Participation: The meeting is open to the public. Written statements

may be filed with the Committee either before or after the meeting. Individuals who wish to make oral statements pertaining to agenda items should contact Ken Korkia at the address or telephone number listed above. Requests must be received 5 days prior to the meeting and reasonable provision will be made to include the presentation in the agenda. The Designated Federal Officer is empowered to conduct the meeting in a fashion that will facilitate the orderly conduct of business. Each individual wishing to make public comment will be provided a maximum of 5 minutes to present their comments at the beginning of the meeting. This notice is being published less than 15 days in advance of the meeting due to programmatic issues that needed to be resolved.

Minutes: The minutes of this meeting will be available for public review and copying at the Freedom of Information Public Reading Room, 1E–190, Forrestal Building, 1000 Independence Avenue, SW, Washington, DC 20585 between 9:00 a.m. and 4 p.m., Monday-Friday, except Federal holidays. Minutes will also be available at the Public Reading Room located at the Board's office at 9035 North Wadsworth Parkway, Suite 2250, Westminster, CO 80021; telephone (303) 420–7855. Hours of operation for the Public Reading Room are 9:00 a.m. and 4:00 p.m. on Monday through Friday. Minutes will also be made available by writing or calling Deb Thompson at the Board's office address or telephone number listed above.

Issued at Washington, DC on March 1, 1999.

Rachel M. Samuel,

Deputy Advisory Committee Management Officer.

[FR Doc. 99–5472 Filed 3–4–99; 8:45 am]

BILLING CODE 6450–01–P

DEPARTMENT OF ENERGY

Federal Energy Regulatory Commission

Cabrillo Power I LLC, Cabrillo Power II LLC; Notice of Issuance of Order

[Docket Nos. ER99–1115–000 and ER99–1116–000]

March 1, 1999.

Cabrillo Power I LLC and Cabrillo II LLC (Applicants), affiliates of Northern States Power Company, filed applications requesting Commission approval to engage in wholesale sales at market-based rates of amounts of power excess of what they are required to provide to the California ISO under Must-Run Agreements. The Applicants also sought authorization to sell ancillary services at market-based rates and to engage in brokering of electric power, and for certain waivers and authorizations. In particular, the Applicants requested that the Commission grant blanket approval under 18 CFR Part 34 of all future issuances of securities and assumptions of liabilities by the Applicants. On February 24, 1999, the Commission issued an Order Conditionally Accepting For Filing Proposed Market-Based Rates (Order), in the above-docketed proceeding.

The Commission's February 24, 1999 Order granted the request for blanket approval under Part 34, subject to the conditions found in Ordering Paragraphs (D), (E), and (G):

(D) Within 30 days of the date of this order, any person desiring to be heard or to protest the Commission's blanket approval of issuances of securities or assumptions of liabilities by the Applicants should file a motion to intervene or protest with the Federal Energy Regulatory Commission, 888 First Street, N.E., Washington, D.C. 20426, in accordance with Rules 211 and 214 of the Commission's Rules of Practice and Procedure, 18 CFR 385.211 and 385.214.

(E) Absent a request to be heard within the period set forth in Ordering Paragraph (D) above, the Applicants are hereby authorized to issue securities and assume obligations and liabilities as guarantor, indorser, surety or otherwise in respect of any security of another person; provided that such issue or assumption is for some lawful object within the corporate purposes of the Applicants, compatible with the public interest, and reasonably necessary or appropriate for such purposes.

(G) The Commission reserves the right to modify this order to require a further showing that neither public nor private interests will be adversely affected by continued Commission approval of the Applicants' issuances of securities or assumptions of liabilities. * * *

Notice is hereby given that the deadline for filing motions to intervene or protests, as set forth above, is March 26, 1999.

Copies of the full text of the Order are available from the Commission's Public Reference Branch, 888 First Street, N.E., Washington, D.C. 20426.

David P. Boergers,

Secretary.

[FR Doc. 99–5435 Filed 3–4–99; 8:45 am]

BILLING CODE 6717–01–M

DEPARTMENT OF ENERGY

Federal Energy Regulatory Commission

[Docket No. ER99–1213–000]

Lakewood Congeneration Limited Partnership; Notice of Issuance of Order

March 1, 1999.

Lakewood Cogeneration Limited Partnership (Lakewood), a Delaware limited partnership affiliated with Consumers Energy Company, filed an application requesting that the Commission authorize it to engage in sales of electric energy and capacity at wholesale at market-based rates, and for certain waivers and authorizations. In particular, Lakewood requested that the Commission grant blanket approval under 18 CFR Part 34 of all future issuances of securities and assumptions of liabilities by Lakewood. On February 26, 1999, the Commission issued an Order Conditionally Accepting For Filing Proposed Rate Schedules For Sales Of Capacity And Energy At Market-Based Rates (Order), in the above-docketed proceeding.

The Commission's February 26, 1999 Order granted the request for blanket approval under Part 34, subject to the conditions found in Ordering Paragraphs (D), (E), and (G):

(D) Within 30 days of the date of this order, any person desiring to be heard or to protest the Commission's blanket approval of issuances of securities or assumptions of liabilities by Lakewood should file a motion to intervene or protest with the Federal Energy Regulatory Commission, 888 First Street, NE, Washington, DC 20426, in accordance with Rules 211 and 214 of the Commission's Rules of Practice and Procedure, 18 CFR 385.211 and 385.214.

(E) Absent a request to be heard within the period set forth in Ordering Paragraph (D) above, Lakewood is hereby authorized to issue securities and assume obligations and liabilities as guarantor, indorser, surety or otherwise in respect of any security of another person; provided that such issue or assumption is for some lawful object within the corporate purposes of Lakewood, compatible with the public interest, and reasonably necessary or appropriate for such purposes.

(G) The Commission reserves the right to modify this order to require a further showing that neither public nor private interests will be adversely affected by continued Commission approval of Lakewood's issuances of securities or assumptions of liabilities. * * *

Notice is hereby given that the deadline for filing motions to intervene or protests, as set forth above, is March 29, 1999.

Copies of the full text of the Order are available from the Commission's Public Reference Branch, 888 First Street, NE, Washington, DC 20426.

David P. Boergers,

Secretary.

[FR Doc. 99–5439 Filed 3–4–99; 8:45 am]

BILLING CODE 6717–01–M

DEPARTMENT OF ENERGY

Federal Energy Regulatory Commission

[Docket No. ER99–1125–000]

LG&E-Westmoreland Rensselaer; Notice of Issuance of Order

March 1, 1999.

LG&E-Westmoreland Rensselaer (LWR), a general partnership, filed an application requesting that the Commission authorize it to engage in sales of electric energy and capacity at wholesale at market-based rates, and for certain waivers and authorizations. In particular, LWR requested that the Commission grant blanket approval under 18 CFR Part 34 of all future issuances of securities and assumptions of liability by LWR. On February 25, 1999, the Commission issued an Order Conditionally Accepting For Filing Proposed Market-Based Rates (Order), in the above-docketed proceeding.

The Commission's February 25, 1999 Order granted the request for blanket approval under Part 34, subject to the conditions found in Ordering Paragraphs (D), (E), and (G):

(D) Within 30 days of the date of this order, any person desiring to be heard or to protest the Commission's blanket approval of issuances of securities or assumptions of liabilities by LWR should file a motion to intervene or protest with the Federal Energy Regulatory Commission, 888 First Street, NE, Washington, DC 20426, in accordance with Rules 211 and 214 of the Commission's Rules of Practice and Procedure, 18 CFR 385.211 and 385.214.

(E) Absent a request to be heard within the period set forth in Ordering Paragraph (D) above, LWR is hereby authorized to issue securities and assume obligations and liabilities as guarantor, indorser, surety or otherwise in respect of any security of another person; provided that such issue or assumption is for some lawful object within the corporate purposes of LWR, compatible with the public interest, and reasonably necessary or appropriate for such purposes.

(G) The Commission reserves the right to modify this order to require a further showing that neither public nor private interests will be adversely affected by continued Commission approval of LWR's issuances of securities or assumptions of liabilities. * * *

Notice is hereby given that the deadline for filing motions to intervene or protests, as set forth above, is March 29, 1999.

Copies of the full text of the Order are available from the Commission's Public Reference Branch, 888 First Street, NE, Washington, DC 20426.

David P. Boergers,

Secretary.

[FR Doc. 99–5436 Filed 3–4–99; 8:45 am]

BILLING CODE 6717–01–M

DEPARTMENT OF ENERGY

Federal Energy Regulatory Commission

[Docket No. ER99–1184–000]

Minnesota Agri-Power, L.L.C.; Notice of Issuance of Order

March 1, 1999.

Minnesota Agri-Power, L.L.C. (Minnesota Agri-Power), a Delaware limited liability company authorized to transact business in the state of Minnesota, filed a proposed rate schedule that would allow it to make sales of power at market-based rates, and for certain waivers and authorizations. In particular, Minnesota Agri-Power requested that the Commission grant blanket approval under 18 CFR Part 34 of all future issuances of securities and assumptions of liabilities by Minnesota Agri-Power. On February 26, 1999, the Commission issued an Order Conditionally Accepting For Filing Proposed Rate Schedules For Sales Of Capacity And Energy At Market-Based Rates (Order), in the above-docketed proceeding.

The Commission's February 26, 1999 Order granted the request for blanket approval under Part 34, subject to the conditions found in Ordering Paragraphs (C), (D), and (F):

(C) Within 30 days of the date of this order, any person desiring to be heard or to protest the Commission's blanket approval of issuances of securities or assumptions of liabilities by Minnesota Agri-Power should file a motion to intervene or protest with the Federal Energy Regulatory Commission, 888 First Street, N.E., Washington, D.C. 20426, in accordance with Rules 211 and 214 of the Commission's Rules of Practice and Procedure, 18 CFR 385.211 and 385.214.

(D) Absent a request to be heard within the period set forth in Ordering Paragraph (C) above, Minnesota Agri-Power is hereby authorized to issue securities and assume obligations and liabilities as guarantor, indorser, surety or otherwise in respect of any security of another person; provided that such issue or assumption is for some lawful object within the corporate purposes of Minnesota Agri-Power, compatible with the public interest, and reasonably necessary or appropriate for such purposes.

(F) The Commission reserves the right to modify this order to require a further showing that neither public nor private interests will be adversely affected by continued Commission approval of Minnesota Agri-Power's issuances of securities or assumptions of liabilities. * * *

Notice is hereby given that the deadline for filing motions to intervene or protests, as set forth above, is March 29, 1999.

Copies of the full text of the Order are available from the Commission's Public Reference Branch, 888 First Street, N.E., Washington, D.C. 20426.

David P. Boergers,

Secretary.

[FR Doc. 99–5437 Filed 3–4–99; 8:45 am]

BILLING CODE 6717–01–M

DEPARTMENT OF ENERGY

Federal Energy Regulatory Commission

[Docket No. ER99–1204–000]

Mobile Energy Services Company, L.L.C.; Notice of Issuance of Order

March 1, 1999.

Mobile Energy Services Company, L.L.C. (Mobile Energy), a limited partnership organized under the laws of the State of Alabama, filed a proposed Market Rate Tariff, requesting Commission authorization to engage in the sale of electric energy and capacity at market rates, and for certain waivers and authorizations. In particular, Mobile Energy requested that the Commission grant blanket approval under 18 CFR Part 34 of all future issuances of securities and assumptions of liabilities by Mobile Energy. On February 26, 1999, the Commission issued an Order Conditionally Accepting For Filing Proposed Market-Based Rates (Order), in the above-docketed proceeding.

The Commission's February 26, 1999 Order granted the request for blanket approval under Part 34, subject to the

conditions found in Ordering Paragraphs (E), (F), and (H):

(E) Within 30 days of the date of this order, any person desiring to be heard or to protest the Commission's blanket approval of issuances of securities or assumptions of liabilities by Mobile Energy should file a motion to intervene or protest with the Federal Energy Regulatory Commission, 888 First Street, N.E., Washington, D.C. 20426, in accordance with Rules 211 and 214 of the Commission's Rules of Practice and Procedure, 18 CFR 385.211 and 385.214.

(F) Absent a request to be heard within the period set forth in Ordering Paragraph (E) above, Mobile Energy is hereby authorized to issue securities and assume obligations and liabilities as guarantor, indorser, surety or otherwise in respect of any security of another person; provided that such issue or assumption is for some lawful object within the corporate purposes of Mobile Energy, compatible with the public interest, and reasonably necessary or appropriate for such purposes.

(H) The Commission reserves the right to modify this order to require a further showing that neither public nor private interests will be adversely affected by continued Commission approval of Mobile Energy's issuances of securities or assumptions of liabilities. * * *

Notice is hereby given that the deadline for filing motions to intervene or protests, as set forth above, is March 29, 1999.

Copies of the full text of the Order are available from the Commission's Public Reference Branch, 888 First Street, N.E., Washington, D.C. 20426.

David P. Boergers,

Secretary.

[FR Doc. 99–5438 Filed 3–4–99; 8:45 am]

BILLING CODE 6717–01–M

DEPARTMENT OF ENERGY

Federal Energy Regulatory Commission

[Docket Nos. ER99–28–000, ER99–28–001, ER99–945–000, and EL99–38–000]

Sierra Pacific Power Company; Notice of Initiation of Proceeding and Refund Effective Date

March 1, 1999.

Take notice that on February 26, 1999, the Commission issued an order in the above-indicated dockets initiating a proceeding in Docket No. EL99–38–000 under section 206 of the Federal Power Act.

The refund effective date in Docket No. EL99–38–000 will be 60 days after publication of this notice in the **Federal Register**.

David P. Boergers,

Secretary.

[FR Doc. 99–5434 Filed 3–4–99; 8:45 am]

BILLING CODE 6717–01–M

DEPARTMENT OF ENERGY

Federal Energy Regulatory Commission

[Docket No. CP99–225–000]

Williams Gas Pipelines Central, Inc.; Notice of Request Under Blanket Authorization

March 1, 1999.

Take notice that on February 23, 1999, Williams Gas Pipelines Central, Inc. (Williams), One Williams Center, Tulsa, Oklahoma 74101 filed in Docket No. CP99–225–000, a request pursuant to Sections 157.205 and 157.212 of the Commission's Regulations under the Natural Gas Act (18 CFR 157.205 and 157.212) for authorization to construct and operate taps, measuring, regulating, and appurtenant facilities for the delivery of gas to Western Resources, Inc.'s (WR) new combustion turbines to be located at the Gordon Evans Power Plant located in Sedgwick County, Kansas, under Williams' blanket certificate authorization issued in Docket No. CP82–479–000, pursuant to Section 7(c) of the Natural Gas Act, all as more fully set forth in the request which is on file with the Commission and open to public inspection. This filing may be viewed on the web at http://www.ferc.fed.us/online/rims.htm (call 202–208–222 for assistance).

Williams states that the estimated construction cost of the taps and measuring facilities is approximately $1,022,116 which will be reimbursed by WR through the subscription of firm transportation service. Williams explains that it has entered into a ten-year firm transportation agreement with WR beginning with a maximum daily transportation quantity of 40,000 MMBtu per day.

Williams states that this change is not prohibited by an existing tariff and that it has sufficient capacity to accomplish the deliveries specified without detriment or disadvantage to its other customers. Williams indicates that it has sent a copy of this request to the Kansas Corporation Commission.

Any person or the Commission's staff may, within 45 days after issuance of the instant notice by the Commission, file with the Federal Energy Regulatory Commission, 888 First Street, NE, Washington, DC 20426, pursuant to Rule 214 of the Commission's Procedural Rules (18 CFR 385.214) a motion to intervene or notice of intervention and pursuant to Section 157.205 of the Regulations under the Natural Gas Act (18 CFR 157.205) a protest to the request. If no protest is filed within the time allowed therefor, the proposed activity shall be deemed to be authorized effective the day after the time allowed for filing a protest. If a protest is filed and not withdrawn within 30 days after the time allowed for filing a protest, the instant request shall be treated as an application for authorization pursuant to Section 7 of the Natural Gas Act.

David P. Boergers,

Secretary.

[FR Doc. 99–5433 Filed 3–4–99; 8:45 am]

BILLING CODE 6717–01–M

DEPARTMENT OF ENERGY

Federal Energy Regulatory Commission

Notice of Reservoir Drawdown and Soliciting Comments, Motions To Intervene, and Protests

March 1, 1999.

Take notice that the following hydroelectric application has been filed with the Commission and is available for public inspection:

a. *Application Type*: Request to drawdown reservoir to facilitate dam repair and rehabilitation.

b. *Project No*: 2291–037.

c. *Date Filed*: February 8, 1999.

d. *Applicant*: Nekoosa Papers Inc.

e. *Name of Project*: Port Edwards Project.

f. *Location*: The project is located on the Wisconsin River in Wood County, Wisconsin. The project does not utilize federal or tribal lands.

g. *Filed Pursuant to*: 18 CFR 4.200.

h. *Applicant Contact*: Mr. Robert W. Gause, Nekoosa Papers Inc. 100 Wisconsin River Drive, Port Edwards, WI 54469–1492, (715) 886–7481.

i. *FERC Contact*: Any questions on this notice should be addressed to Robert J. Fletcher, e-mail address: robert.fletcher@ferc.fed.us, or telephone, 202–219–1206.

j. *Deadline for filing comments and or motions*: April 9, 1999. Please include the project number (p–2291–037) on any comments or motions filed.

k. *Description of Application*: Nekoosa Papers (licensee) plans to start timber crib dam repair and rehabilitation. The drawdown will commence early on June 13, 1999 and

will continue through June 14, 1999 (lasting a total of 34 hours). The repair work will begin June 14, 1999 and be completed by September 29, 1999. The refill of the reservoir will start late on September 29, 1999 and conclude on September 30, 1999, weather permitting.

Nekoosa Papers will start drawing the impoundment down at a rate of no more than six inches per hour. The reservoir at the Port Edwards Project will be drawn down a total of 17 feet. Notice of the drawdown will be published in the local newspapers on the day prior to the drawdown. Nekoosa Papers has already initiated consultation with the U.S. Fish and Wildlife Service and the Wisconsin Department of Natural Resources.

l. *Locations of the application*: A copy of the application is available for inspection and reproduction at the Commission's Public Reference Room, located at 888 First Street, NE, Room 2A, Washington, D.C. 20426, or by calling (202) 208–1371. The application may be viewed on the web at www.ferc.fed.us. Call (202) 208–2222 for assistance. A copy is also available for inspection and reproduction at the address in item h above.

m. *This notice also consists of the following standard paragraphs*: B, C1, and D2.

B. Comments, Protests, or Motions to Intervene—Anyone may submit comments, a protest, or a motion to intervene in accordance with the requirements of Rules of Practice and Procedure, 18 CFR 385.210, .211, .214. In determining the appropriate action to take, the Commission will consider all protests or other comments filed, but only those who file a motion to intervene in accordance with the Commission's Rules may become a party to the proceeding. Any comments, protests, or motions to intervene must be received on or before the specified comment date for the particular application.

C1. Filing and Service of Responsive Document—Any filings must bear in all capital letters the title ''COMMENTS'', ''RECOMMENDATIONS FOR TERMS AND CONDITIONS'', ''PROTEST'', OR ''MOTION TO INTERVENE'', as applicable, and the Project Number of the particular application to which the filing refers. Any of the above-named documents must be filed by providing the original and the number of copies provided by the Commission's regulations to: The Secretary, Federal Energy Regulatory Commission, 888 First Street, N.E., Washington, D.C. 20426. A copy of any motion to intervene must also be served upon each representative of the Applicant specified in the particular application.

D2. Agency Comments—Federal, state, and local agencies are invited to file comments on the described application. A copy of the application may be obtained by agencies directly from the Applicant. If an agency does not file comments within the time specified for filing comments, it will be presumed to have no comments. One copy of an agency's comments must also be sent to the Applicant's representatives.

David P. Boergers,

Secretary.

[FR Doc. 99–5440 Filed 3–4–99; 8:45 am]

BILLING CODE 6717–01–M

DEPARTMENT OF ENERGY

Federal Energy Regulatory Commission

Notice of Surrender of License

March 1, 1999.

Take notice that the following hydroelectric application has been filed with the Commission and is available for public inspection:

a. *Type of Application:* Surrender of License.

b. *Project No.:* 7829–009.

c. *Date Filed:* January 25, 1999.

d. *Applicant:* Talent, Rogue River Valley, and Medford Irrigation Districts.

e. *Name of Project:* Emigrant Dam.

f. *Location:* On Emigrant Creek, in Jackson County, Oregon at the Bureau of Reclamation's Emigrant Dam.

g. *Field Pursuant to:* Federal Power Act, 16 U.S.C. §§ 791(a)–825(r).

h. *Applicant Contact:* Hollie Cannon, Talent Irrigation District, P.O. Box 467, Talent, OR 97540, (541) 535–1529.

i. *FERC Contact:* Regina Saizan, (202) 219–2673; e-mail address: Regina.Saizan@ferc.fed.us

j. *Comment Date:* April 10, 1999.

Please include the project nubmer (7829–009) on any comments or motions filed.

k. *Description of the Request:* The licensee states that due to market and finance conditions it is not feasible to construct the project. No construction has commenced.

l. *Location of the application:* A copy of the application is available for inspection and reproduction at the Commission's Public Reference Room, located at 888 First Street, NE, Room 2A, Washington, D.C. 20426, or by calling (202) 208–1371. The application may be viewed on the web at www.ferc.fed.us. Call (202) 208–2222 for assistance. A copy is also available for inspection and reproduction at the address in item h above.

m. This notice also consists of the following standard paragraphs: B, C1, and D2.

B. Comments, Protests, or Motions to Intervene—Anyone may submit comments, a protest, or a motion to intervene in accordance with the requirements of Rules of Practice and Procedure, 18 CFR 385.210, .211, .214. In determining the appropriate action to take, the Commission will consider all protests or other comments filed, but only those who file a motion to intervene in accordance with the Commission's Rules may become a party to the proceeding. Any comments, protests, or motions to intervene must be received on or before the specified comment date for the particular application.

C1. Filing and Service of Responsive Documents—Any filings must bear in all capital letters the title ''COMMENTS'', ''RECOMMENDATIONS FOR TERMS AND CONDITIONS'', ''PROTESTS'', OR ''MOTION TO INTERVENE'', as applicable, and the Project Number of the particular application to which the filing refers. Any of the above-named documents must be filed by providing the original and the number of copies provided by the Commission's regulations to: The Secretary, Federal Energy Regulatory Commission, 888 First Street, N.E., Washington, D.C. 20426. A copy of any motion to intervene must also be served upon each representative of the Applicant specified in the particular application.

D2. Agency Comments—Federal, state, and local agencies are invited to file comments on the described application. A copy of the application may be obtained by agencies directly from the Applicant. If an agency does not file comments within the time specified for filing comments, it will be presumed to have no comments. One copy of an agency's comments must also be sent to the Applicant's representatives.

David P. Boergers

Secretary.

[FR Doc. 99–5441 Filed 3–4–99; 8:45 am]

BILLING CODE 6717–01–M

ENVIRONMENTAL PROTECTION AGENCY

[FRL–6238–5]

Agency Information Collection Activities: Submission for OMB Review; Comment Request; Personal Exposure of High-Risk Subpopulations to Particles

AGENCY: Environmental Protection Agency (EPA).

ACTION: Notice.

SUMMARY: In compliance with the Paperwork Reduction Act (44 U.S.C. 3501 *et seq.*), this document announces that the following Information Collection Request (ICR) has been forwarded to the Office of Management and Budget (OMB) for review and approval: Personal Exposure of High-Risk Subpopulations to Particles; EPA ICR Number 1887.01. The ICR describes the nature of the information collection and its expected burden and cost; where appropriate, it includes the actual data collection instrument.

DATES: Comments must be submitted on or before April 5, 1999.

FOR FURTHER INFORMATION CONTACT: Contact Sandy Farmer at EPA by phone at (202) 260–2740, by email at farmer.sandy@epamail.epa.gov, or download off the Internet at http://www.epa.gov/icr and refer to EPA ICR Number 1887.01.

SUPPLEMENTARY INFORMATION:

Title: Personal Exposure of High-Risk Subpopulations to Particles; EPA ICR Number 1887.01. This is a new collection.

Abstract: The National Exposure Research Laboratory (NERL) of the Office of Research and Development (ORD) at EPA is funding four studies of personal exposure of high-risk subpopulations to particles and associated gases. The studies, which have been recommended by the National Academy of Sciences (NAS) under a directive from Congress, are considered necessary to support the proposed new National Ambient Air Quality Standard (NAAQS) for fine particles ($PM_{2.5}$).

Three of the studies are 3-year cooperative agreements with the following institutions: the Harvard School of Public Health, the New York University School of Medicine, and the University of Washington. The fourth study is an in-house study with contractual support. All four studies will employ the same questionnaire to supplement the collection of information on personal, indoor, and outdoor concentrations of the target pollutants. Subjects will be selected by physicians from among their patients with respiratory or cardiovascular disease. Participation will be entirely voluntary.

The information will be used by scientists within ORD and external to the Agency to determine the relationship between personal exposure, indoor concentrations, and concentrations measured at a central monitoring site for one or more high-risk subpopulations, including particularly persons with chronic obstructive pulmonary disease (COPD) and persons with cardiovascular disease. The data will also be used by the EPA Office of Air Quality Planning and Standards in their review of the basis for the proposed $PM_{2.5}$ regulation. The information will appear in the form of final EPA reports, journal articles, and will also be made publicly available in an electronic data base.

The cost of the four studies is expected to be $6M over a period of three years. Approximately 312 respondents will be included over the three-year period. There are no costs to the respondents. An incentive payment will be offered to defray burden.

An agency may not conduct or sponsor, and a person is not required to respond to, a collection of information unless it displays a currently valid OMB control number. The OMB control numbers for EPA's regulations are listed in 40 CFR part 9 and 48 CFR Chapter 15. The **Federal Register** document required under 5 CFR 1320.8(d), soliciting comments on this collection of information was published on 12/15/98 (63 FR 69073); no comments were received.

Burden Statement: The annual public reporting and record keeping burden for this collection of information is estimated to average 20.1 hours per response. Burden means the total time, effort, or financial resources expended by persons to generate, maintain, retain, or disclose or provide information to or for a Federal agency. This includes the time needed to review instructions; develop, acquire, install, and utilize technology and systems for the purposes of collecting, validating, and verifying information, processing and maintaining information, and disclosing and providing information; adjust the existing ways to comply with any previously applicable instructions and requirements; train personnel to be able to respond to a collection of information; search data sources; complete and review the collection of information; and transmit or otherwise disclose the information.

Respondents/Affected Entities: individuals that volunteer to participate in the study.

Estimated Number of Annual Respondents: 104.

Frequency of Response: varies/on occasion.

Estimated Total Annual Hour Burden: 2,090 hours.

Estimated Total Annualized Cost Burden: $0.00.

Send comments on the Agency's need for this information, the accuracy of the provided burden estimates, and any suggested methods for minimizing respondent burden, including through the use of automated collection techniques to the following addresses. Please refer to the EPA ICR Number in any correspondence.

Ms. Sandy Farmer, U.S. Environmental Protection Agency, OP Regulatory Information Division (2137), 401 M Street, SW, Washington, DC 20460; and

Office of Information and Regulatory Affairs, Office of Management and Budget, Attention: Desk Officer for EPA, 725 17th Street, NW, Washington, DC 20503.

Dated: February 26, 1999.

Richard T. Westlund,

Acting Director, Regulatory Information Division.

[FR Doc. 99–5490 Filed 3–4–99; 8:45 am]

BILLING CODE 6560–50–P

ENVIRONMENTAL PROTECTION AGENCY

[FRL–6238–4]

Agency Information Collection Activities; Submission for OMB Review; Comment Request; National Water Quality Inventory Reports

AGENCY: Environmental Protection Agency (EPA).

ACTION: Notice.

SUMMARY: In compliance with the Paperwork Reduction Act (44 U.S.C. 3501 *et seq.*), this document announces that the following Information Collection Request (ICR)has been forwarded to the Office of Management and Budget (OMB) for review and comment: National Water Quality Inventory Reports (Clean Water Act sections 305(b), 303(d), 314(a), and 106(e)); OMB Control No. 2040–0071, expires June 30, 1999. The ICR describes the nature of the information collection and its expected cost and burden; where appropriate, it includes the actual data collection instrument.

DATES: Comments must be submitted on or before April 5, 1999.

FOR FURTHER INFORMATION CONTACT: Contact Sandy Farmer at EPA by phone at (202) 260–2740, by email at farmer.sandy@epamail.epa.gov, or download off the Internet at http://www.epa.gov/icr and refer to EPA ICR No. 1560.05.

SUPPLEMENTARY INFORMATION:

Title: National Water Quality Inventory Reports (Clean Water Act sections 305(b), 303(d), 314(a), and 106(e)); OMB Control No. 2040–0071, EPA ICR No. 1560.05, expires June 30, 1999. This is a request for extension of a currently approved collection.

Abstract: Section 305(b) of the Clean Water Act (Public Law 92–500, 33 U.S.C. 1251 *et seq.*; most recently amended in 1987 by Public Law 100–4) requires each State to prepare and submit a biennial water quality report to the EPA Administrator. Regulations for water quality monitoring, planning, management and reporting are found in 40 CFR part 130. Each 305(b) report includes such information as a description of the quality of waters of the State; an analysis of the extent to which these waters provide for the protection and propagation of a balanced population of shellfish, fish, and wildlife, and allow recreational activities in and on the water; recommendations for additional action necessary to achieve such uses; an estimate of the environmental impact and economic and social costs as well as the economic and social benefits of such achievement; and a description of the nature and extent of nonpoint sources of pollutants and recommendations as to programs needed to control each category of such sources.

Under the CWA section 314(a)(2), States must incorporate information regarding Clean Lakes into the 305(b) reports. States are to include the following: an identification and classification according to trophic condition of all publicly owned lakes; a description of the methods to control sources of pollution and restore these lakes; methods to mitigate the harmful effects of high acidity; a list and description of publicly owned lakes for which uses are known to be impaired; and an assessment of the status and trends of water quality in lakes.

Section 303(d)(1) of the CWA requires States to identify and rank water-quality limited waters which will not meet State water quality standards after implementation of required controls, such as, technology-based point source controls.

Section 106(e) requires States to include information on monitoring activities implemented to evaluate the quality of navigable waters and ground water in the 305(b) reports.

Reporting under sections 305(b) and 314 is thus required of the 50 States. Reporting activities under section 303(d) may be submitted as part of the 305(b) report or may be submitted under separate cover. Other respondents (Territories, River Basin Commissions) also prepare 305(b) reports to document the quality of their waters to EPA, Congress, and the public and, in some cases, to meet grant conditions.

The 305(b) reporting process is an essential component of the EPA water pollution control program. EPA's Office of Water uses the 305(b) reports as the principal information source for assessing nationwide water quality, progress made in maintaining and restoring water quality, and the extent of remaining water pollution problems. EPA prepares the National Water Quality Inventory Report to Congress and evaluates impacts of EPA's water pollution control programs with the information and data supplied in the 305(b) reports and the corresponding national database, the EPA Waterbody System. The Office of Water uses the Report to Congress to target persistent and emerging water quality problems with new initiatives and to improve or eliminate ineffective programs.

EPA uses the information submitted under section 314 to evaluate and to report on trends in the status of lake water quality reports issued by the section 314 Clean Lakes Program. The Agency also uses this information for a variety of other purposes including to assist in the management of lake projects funded under both sections 314 and 319 of the Clean Water Act.

Under section 303(d), EPA must review and approve or disapprove the State lists of water-quality limited waterbodies still requiring total maximum daily loads (TMDLs). Section 303(d) of the CWA establishes the TMDL process to provide for more stringent water-quality based controls when required Federal, State or local controls are inadequate to achieve State water quality standards. TMDLs encourage a holistic view of water quality problems considering all contributions and instream water quality and provide a method to allocate those contributions to meet water quality standards.

EPA is currently developing proposed revisions to the TMDL program regulations and, as part of that effort, will determine whether it needs to prepare a new ICR based on the proposed regulatory revisions. While at this time, EPA believes that it is likely that a new ICR will be needed, no final decision will be made and the Agency will continue to undertake the necessary analyses needed to make such a final decision.

During 1998, EPA worked with its partners on the development of Clean Water Action Plan Unified Watershed Assessments (UWA). EPA and its partners are looking into whether these assessments should be updated in the future. If the UWA are updated and are subject to ICR requirements, EPA will conduct a complete burden analysis.

The next 305(b) reports and 303(d) lists are due to EPA in April 2000. EPA has published guidelines on the types of information requested of respondents in their 305(b) reports. The current edition is Guidelines for the Preparation of the Comprehensive State Water Quality Assessments (305(b) Reports) and Electronic Updates: Report Contents, EPA841–B–97–002A, and Guidelines for the Preparation of the Comprehensive State Water Quality Assessments (305(b) Reports) and Electronic Updates: Supplement, EPA841–B–97–002B (For further information or a copy call: Susan Holdsworth at EPA, (202) 260–4743).

An agency may not conduct or sponsor, and a person is not required to respond to, a collection of information unless it displays a currently valid OMB control number. The OMB control numbers for EPA's regulations are listed in 40 CFR part 9 and 48 CFR Chapter 15. The **Federal Register** document required under 5 CFR 1320.8(d), soliciting comments on this collection of information was published on 11/13/98 (63 FR 63470): one comment was received. The commentors recommend that EPA increase the estimate of the burden associated with State preparation of 305(b) reports . . . because the States are not properly preparing the 305(b) reports. . .''and that EPA increase its activities to improve the quality of State 305(b) reports. In response, EPA is addressing the concern that the level of detail and the comprehensiveness of 305(b) reports varies among states. These efforts include the use of financial incentives and the dissemination of guidance, training and technology. Preliminary results indicate these efforts are successfully improving the 305(b) reporting process. In addition, EPA did review its calculation of burden and identified an error in the calculation. When revising the estimate of burden to reflect 2-year rather than 5-year reporting cycle, EPA did not recalculate the burden associated with the ground water portion of the assessments. Correction of this error increased the estimate of burden hours.

Burden Statement: The annual public reporting and recordkeeping burden for this collection of information is estimated to average 4164 hours per response. Burden means the total time, effort, or financial resources expended by persons to generate, maintain, retain, or disclose or provide information to or for a Federal agency. This includes the time needed to review instructions; develop, acquire, install, and utilize technology and systems for the purposes of collecting, validating, and verifying information, processing and maintaining information, and disclosing and providing information; adjust the existing ways to comply with any previously applicable instructions and requirements; train personnel to be able to respond to a collection of information; search data sources; complete and review the collection of information; and transmit or otherwise disclose the information.

Respondents/Affected Entities: States, the District of Columbia, Territories, and River Basin Commissions.

Estimated Number of Respondents: 59.

Frequency of Response: Reports every 2 years as required by the CWA; annual electronic updates of water quality assessment data is encouraged in 1999 and 2001 and the burden of this activity is included in this renewal request.

Estimated Total Annual Hour Burden: 245,676 hours.

Estimated Total Annualized Cost: $0.00.

Send comments on the Agency's need for this information, the accuracy of the provided burden estimates, and any suggested methods for minimizing respondent burden, including through the use of automated collection techniques to the following addresses. Please refer to EPA ICR No. 1560.05 and OMB Control No. 2040–0071 in any correspondence.

Ms. Sandy Farmer, U.S. Environmental Protection Agency, OP Regulatory Information Division (2137), 401 M Street, SW, Washington, DC 20460;

and

Office of Information and Regulatory Affairs, Office of Management and Budget, Attention: Desk Officer for EPA, 725 17th Street, NW, Washington, DC 20503.

Dated: March 1, 1999.

Richard T. Westlund,

Acting Director, Regulatory Information Division.

[FR Doc. 99–5491 Filed 3–4–99; 8:45 am]

BILLING CODE 6560–50–P

ENVIRONMENTAL PROTECTION AGENCY

[FRL–6238–3]

Agency Information Collection Activities: Submission for OMB Review; Comment Request; Enforcement Policy Regarding the Sale and Use of Aftermarket Catalytic Converters ICR

AGENCY: Environmental Protection Agency (EPA).

ACTION: Notice.

SUMMARY: In compliance with the Paperwork Reduction Act (44 U.S.C. 3501 *et seq.*), this document announces that the following Information Collection Request (ICR) has been forwarded to the Office of Management and Budget (OMB) for review and approval: Enforcement Policy Regarding the Sale and Use of Aftermarket Catalytic Converters; OMB No. 2060–0135; expires 03/31/99. The ICR describes the nature of the information collection and its expected burden and cost; and where appropriate, it includes the actual data collection instrument.

DATES: Comments must be submitted on or before April 5, 1999.

FOR FURTHER INFORMATION CONTACT: Sandy Farmer at EPA by phone at (202) 260–2740, by E-Mail at Farmer.Sandy@epamail.epa.gov or download off the Internet at *http://www.epa.gov/icr* and refer to EPA ICR No. 1292.05.

SUPPLEMENTARY INFORMATION:

Title: Enforcement Policy Regarding the Sale and Use of Aftermarket Catalytic Converters, (OMB Control No. 2060–0135; EPA ICR No. 1292.05.) expiring 3/31/99. This is a request for an extension of a currently approved collection.

Abstract: Section 203(a) of the Clean Air Act (Act), 42 U.S.C. 7522(a), prohibits removing or rendering inoperative automobile emission control devices or elements of design and prohibits the sale or installation of any device that bypasses or renders inoperative emission control elements of design. Prior to the issuance of the aftermarket catalytic converter enforcement policy (51 FR 28114–28119, 28133 (Aug. 5, 1986); 52 FR 42144 (Nov. 3, 1987)), the manufacture, sale or installation of aftermarket catalytic converters not equivalent to new original equipment (OE) converters violated § 203 of the Act. However, current EPA policy allows aftermarket converters to be manufactured and installed, under the conditions that the converters meet certain specified standards; a converter may be installed on a vehicle only if it is the appropriate type and size for that vehicle. The record keeping and testing requirements of the policy are needed to ensure the quality and installation requirements are met.

New aftermarket catalytic converter manufacturers are required, once for each converter line manufactured, to identify physical specifications of the converter and to summarize pre-production testing of the prototype. The manufacturer must report semi-annually the number of each type of converter manufactured, and provide a summary of warranty card information (or copies of the actual cards, at the manufacturer's option). In addition, the manufacturers must keep warranty cards for 5 years, since that is the length of the warranty period.

A company that reconditions used converters must, one time only, identify itself and provide information regarding its converter testing equipment and procedures. All used converters must be individually bench-tested, and the company must report semi-annually the identity of its distributors and the number of reconditioned converters of each type that are sold to the distributor.

Installers of aftermarket converters have no reporting requirements but must keep copies of installation invoices and a record that demonstrates that the installation was justified. Removed converters must be tagged with identifying information and be kept for 15 days.

EPA allows the use of computerized records and pre-printed documents.

Parties who comply with these policies are allowed to manufacture, sell and install aftermarket catalytic converters which are not identical to original equipment (OE) converters.

While the program is voluntary in that converter manufacturers could instead manufacture or install certified OE-equivalent converters, for companies choosing to manufacture converters meeting the less stringent requirements of the policy, all responses are mandatory. EPA has authority to require this information under section 203 of the Act, 42 U.S.C. 7522, section 114 of the Act, 42 U.S.C. 7414 and section 208 of the Act, 42 U.S.C. 7542. Confidentiality of information obtained from parties is protected under 40 CFR part 2.

An agency may not conduct or sponsor, and a person is not required to respond to, a collection of information unless it displays a currently valid OMB control number. The OMB control numbers for EPA's regulations are listed in 40 CFR part 9 and 48 CFR Chapter

15. The **Federal Register** document required under 5 CFR 1320.8(d), soliciting comments on this collection of information was published on August 5, 1998 (63 FR 41818); no comments were received.

Burden Statement: The annual public reporting and record keeping burden for this collection of information for new aftermarket catalytic converter manufacturers is estimated to average 4 hours per year (combined average). Burden means the total time, effort, or financial resources expended by persons to generate, maintain, retain, or disclose or provide information to or for a Federal agency. This includes the time needed to review instructions; develop, acquire, install, and utilize technology and systems for the purposes of collecting, validating, and verifying information, processing and maintaining information, and disclosing and providing information; adjust the existing ways to comply with any previously applicable instructions and requirements; train personnel to be able to respond to a collection of information; search data sources; complete and review the collection of information; and transmit or otherwise disclose the information.

Respondents/Affected Entities: Aftermarket catalytic converter manufacturers and re-conditioners and aftermarket converter installers.

Estimated Number of Respondents: 12 new aftermarket catalytic converter manufacturers, 8 used catalytic converter re-conditioners and 17,000 aftermarket converter installers.

Frequency of Response: 3 reports per year for new aftermarket converter manufacturers and one prototype testing event per year; 2 reports per year for used aftermarket conditioners and 8,900 tests of individual converters; installers average 118 recordkeeping activities each year on a per sales transaction basis, with no reporting.

Estimated Total Annual Hour Burden: 65,788 hours, including startup hours.

Estimated Total Annualized Cost Burden: $756,444, including annualized startup costs.

Send comments on the Agency's need for this information, the accuracy of the provided burden estimates, and any suggested methods for minimizing respondent burden, including through the use of automated collection techniques to the following addresses. Please refer to EPA ICR No. 1292.05 and OMB Control No. 2060–0135 in any correspondence.

Ms. Sandy Farmer, U.S. Environmental Protection Agency, Office of Policy, Regulatory Information Division (2137), 401 M Street, SW, Washington, DC 20460;
and
Office of Information and Regulatory Affairs, Office of Management and Budget, Attention: Desk Officer for EPA, 725 17th Street, NW., Washington, DC 20503.

Dated: February 26, 1999.

Richard T. Westlund,

Acting Director, Regulatory Information Division.

[FR Doc. 99–5492 Filed 3–4–99; 8:45 am]

BILLING CODE 6560–50–P

ENVIRONMENTAL PROTECTION AGENCY

[ER–FRL–6240–5]

Environmental Impact Statements and Regulations; Availability of EPA Comments

Availability of EPA comments prepared February 8, 1999 through February 12, 1999 pursuant to the Environmental Review Process (ERP), under Section 309 of the Clean Air Act and Section 102(2)(c) of the National Environmental Policy Act as amended. Requests for copies of EPA comments can be directed to the Office of Federal Activities at (202) 564–7167.

An explanation of the ratings assigned to draft environmental impact statements (EISs) was published in FR dated April 10, 1998 (63 FR 17856).

Draft EISs

ERP No. D–COE–B32011–RI Rating EO2, Providence River and Harbor Maintenance Dredging Project, To Restore the Navigation Efficiency, Providence River Shipping Channel, Narragansett Bay, R.I.

Summary: EPA expressed environmental objections with the Corps' preferred Narragansett Bay disposal alternatives (Site 3 and the Watchemoket Cove CAD Disposal Site) and suggested that the Corps give further consideration to disposal at other alternate sites including those in Rhode Island Sound. EPA requested additional information concerning fisheries impacts, current characteristics at the disposal sites, sediment erosion modeling, water quality, compliance with Clean Water Action Section 404 (b)(1) Guidelines, and time of year restrictions (dredge windows).

ERP No. D–FAA–B51016–CT Rating EC2, Sikorsky Memorial Airport, Proposed Runway 6–24 Improvements, Construction, Stratford, CT.

SUMMARY: EPA requested additional information about the runway improvements concerning wetlands, endangered species, water quality and mitigation in order to fully evaluate the environmental acceptability of the project.

ERP No. D–NOA–A91065–00 Rating LO, Atlantic Tunas, Swordfish and Sharks, Highly Migratory Species Fishery Management Plan.

Summary: Review of the draft EIS was not deemed necessary. No formal comment letter was sent to the preparing agency.

ERP No. D–USA–E11043–GA Rating EC2, U.S. Army/Fort Benning and The Consolidated Government of Columbus Proposed Land Exchange, Muscogee and Chattahoochee Counties, GA.

Summary: EPA expressed environmental concerns about the long-term ramifications of this deed transfer on biologically important species. Additional information will be necessary to determine the actual significance of this property exchange.

Final EISs

ERP No. F–COE–J36049–00, East Grand Forks, Minnesota and Grand Forks, North Dakota Flood Control and Flood Protection, Red River Basin, MN and ND.

Summary: EPA continues to have concerns that this EIS does not take into account the potential reasonably foreseeable development of Devil Lake outlet, which could significantly affect the flow in the Red River. EPA believes the Corps should take a basin wide approach to its analysis including a discussion of the drainage of upper basin wetlands and how it could relate to the shift in flood peaks.

ERP No. F–FHW–B40081–NH

Summary: The Final EIS contains a substantial amount of new information responsive to previously stated concerns about wetlands, water supply, water quality and air quality impacts associated with the project.

ERP No. F–FRC–B03009–ME, Maritimes Phase II Project, Construct and Operate an Interstate Natural Gas Pipeline, COE Section 10 and 404 Permits, Endangered Species Act (ESA) and NPDE's permits, US Canada border at Woodland (Burleyville) Maine and Westbrook Maine.

Summary: EPA expressed environmental concerns about the incomplete analysis of direct and secondary impacts and tie-ins to the pipeline, impacts to vernal pools, and elements of contingency plans developed for directional drilling applications.

ERP No. F–FTA–E40774–FL, Central Florida Light Rail Transit System Transportation Improvement to the

North/South Corridor Project, Locally Preferred Alternative (LPA) and Minimum Operable Segment (MOS), Orange and Seminole Counties, FL.

Summary: EPA's review found that concerns raised on the Draft EIS were adequately addressed in the Final EIS document.

ERP No. F–USN–K11064–CA, Mare Island Naval Shipyard Disposal and Reuse, Implementation, City of Valley, Solano County, CA.

Summary: EPA had a lack of objections to this project.

ERP No. F–USN–K11087–CA, Long Beach Complex Disposal and Reuse, Implementation, COE Section 10 and 404 Permits, NPDES Permit, in the City of Long Beach and Los Angeles County, CA.

Summary: EPA had no objection to this project.

Dated: March 2, 1999.

B. Katherine Biggs,

Associate Director, NEPA Compliance Division, Office of Federal Activities.

[FR Doc. 99–5503 Filed 3–4–99; 8:45 am]

BILLING CODE 6560–50–U

ENVIRONMENTAL PROTECTION AGENCY

[ER–FRL–6240–4]

Environmental Impact Statements; Notice of Availability

Responsible Agency: Office of Federal Activities, General Information (202) 564–7167 OR (202) 564–7153.

Weekly receipt of Environmental Impact Statements

Filed February 22, 1999 Through February 26, 1999

Pursuant to 40 CFR 1506.9

EIS No. 990058, Draft EIS, BOP, KY, McCreary, County Federal Correctional Facility, Construction and Operation, McCreary County, KY, Due: April 19, 1999, Contact: James B. Jones (202) 307–3230.

EIS No. 990059, Draft EIS, FHW, MO, MO–19 Missouri River Replacement Bridge Project, Construction and Operation, US Coast Guard and COE Section 404 Permits, Gasconade and Montgomery Counties, MO, Due: April 27, 1999, Contact: Don Neumann (573) 636–7104.

EIS No. 990060, Draft EIS, AFS, MT, Pinkham, Timber Sales and Associated Activities, Implementation, Kootenai National Forest, Rexford Ranger District, Lincoln County, MT, Due: April 19, 1999, Contact: Terry Chute (406) 296–2536.

EIS No. 990061, Draft EIS, COE, AL, Jackson Port Project, Proposal for the Public Port Facilities on the Tombigbee River, City of Jackson, Clark County, AL, Due: April 19, 1999, Contact: Beverley Stout (334) 694–4637.

EIS No. 990062, Draft EIS, NRC, MD, Calvert Cliffs Nuclear Power Plant Unit 1 and 2, License Renewal of Nuclear Plant, Calvert County, MD, Due: May 20, 1999, Contact: Thomas J. Kenyon (301) 415–1120.

EIS No. 990063, Final EIS, FHW, WV, OH, Appalachian Corridor D Construction, Ohio River To I–77 ''Missing Link'', from US 50 in Belpre, OH to the Interchange east of Parkersburg, WV US Coast Guard Bridge, COE Section 404 and NPDES Permits, Wood County, West Virginia and Washington County, Ohio, Due: April 12, 1999, Contact: Daniel A. Leighow (304) 347–5928.

EIS No. 990064, Final EIS, BLM, CA, Telephone Flat Geothermal Power Plant within the Glass Mountain Known Geothermal Resource Area, Construction, Operation and Decommissioning of a 48 megawatt (MW) Geothermal Plant, Modoc National Forest, Siskiyou County, CA, Due: April 5, 1999, Contact: Randall M. Sharp (530) 233–5811.

Amended Notices

EIS No. 970181, Draft EIS, TVA, MS, Exercise of Option Purchase Agreement with LSP Energy Limited Partnership for Supply of Electric Energy, Construction and Operation, Batesville Generation Facility, Funding, COE Section 10 and 404 Permits and NPDES Permit, City of Batesville, Coahoma, Panola, Quitman and Yalobusha Counties, MS, Contact: Gregory L. Askew (423) 632–6418.

Published FR 05–14–97, Officially Withdrawn by the Preparing Agency.

Dated: March 2, 1999.

B. Katherine Biggs,

Associate Director, NEPA Compliance Division, Office of Federal Activities.

[FR Doc. 99–5504 Filed 3–4–99; 8:45 am]

BILLING CODE 6560–50–U

ENVIRONMENTAL PROTECTION AGENCY

[FRL–6238–1]

National Drinking Water Advisory Council; Shallow Injection Wells (Class V)/Drinking Water Source Protection Program Integration Working Group, Notice of Open Meeting

AGENCY: Environmental Protection Agency (EPA).

ACTION: Notice.

SUMMARY: Under section 10(a)(2) of Pub. L. 92–423, ''The Federal Advisory Committee Act,'' notice is hereby given that a meeting of the Shallow Injection Wells (Class V)/Drinking Water Source Protection Program Integration Working Group of the National Drinking Water Advisory Council, established under the Safe Drinking Water Act, as amended (42 U.S.C. S300f *et seq.*), will be held on March 25, 1999 from 8:30 am to 5:00 pm and March 26 from 8:30 am to 5:00 pm. The meeting will be held at the Governor's House Hotel, 1615 Rhode Island Avenue, NW, Washington, DC 20036. The meeting is open to the public, but due to past experience, seating will be limited.

The purpose of this meeting is to continue the discussion on the proposed Class V well regulation (63 FR 40586) and source water assessment and protection as it relates to the Class V proposal. Statements from the public will be taken at the end of the meeting if time allows.

The Designated Federal Officer for this meeting of the Shallow Injection Wells (Class V)/Drinking Water Source Protection Program Integration Working Group will be Connie Bosma, Chief of the Regulatory Implementation Branch. For more information, please contact, Amber Moreen, U.S. EPA, Office of Ground Water and Drinking Water, Mail Code 4606, 401 M Street SW, Washington, DC 20460. The telephone number is 202/260–4891 and the e-mail address is moreen.amber@epa.gov.

Dated: March 1, 1999.

Charlene E. Shaw,

Designated Federal Officer, National Drinking Water Advisory Council.

[FR Doc. 99–5489 Filed 3–4–99; 8:45 am]

BILLING CODE 6560–50–P

ENVIRONMENTAL PROTECTION AGENCY

[FRL–6306–4]

Workshop for Peter Review of the Draft EPA Risk Characterization Handbook and Case Studies

AGENCY: Environmental Protection Agency (EPA).

ACTION: Notice of meeting.

SUMMARY: This notice announces an Environmental Protection Agency (EPA) meeting for peer review of a draft Risk Characterization Handbook and associated case studies. The peer review panel will discuss the Handbook and case studies, and comment on their usefulness as guidance for describing the scientific conclusions reached

during the risk assessment process. EPA will use the peer review comments to revise and complete the Handbook and case studies.

DATES: The peer review meeting will begin on Wednesday, March 24, 1999 at 9:00 a.m. and end on Thursday, March 25, 1999 at approximately 5:00 p.m. The public is invited to attend the peer review meeting as observers. Seating is limited so advance registration is suggested.

ADDRESSES: The peer review meeting will be held at the Ramada Plaza Hotel, Old Town, 901 North Fairfax Street, Alexandria, VA 22314–1501, phone 703–683–6000.

FOR FURTHER INFORMATION CONTACT: The EPA has contracted with Eastern Research Group, Inc. (ERG, Inc., 110 Hartwell Avenue, Lexington, Massachusetts 02173) to manage and conduct the peer review. To attend the meeting as an observer, please preregister by calling ERG at 781–674–7374 or fax a registration request to 781–674–2906. Upon registration you will be sent an agenda and a logistical fact sheet. A limited amount of time is set aside on the second day of the meeting for observers to present brief oral comments on a first-come, first-serve basis and is limited to the time available; therefore, please notify ERG's registration line if you wish to present oral comments.

Interested parties can obtain a single copy of the draft materials by calling EPA's National Service Center for Environmental Publications (NSCEP) at 1–800–490–9198. When contacting NSCEP, please provide your name and mailing address, and request publication number EPA/600/R–99/025 dated March 1999.

SUPPLEMENTARY INFORMATION: In March 1995, responding to recommendations in a National Research Council report, EPA's Administrator issued the Policy for Risk Characterization for Agency-wide use. A subcommittee of the EPA's Science Policy Council has been working with risk assessors and risk managers to test and develop principles for implementing the Policy. Unlike EPA's risk assessment guidelines, which provide specific guidance for targeted parts of the risk assessment process (e.g., Guidelines for Carcinogen Risk Assessment, Guidelines for Developmental Toxicity Risk Assessment), the draft Handbook proposes general guidance that focuses on presenting the results of the risk assessment so that these results are clear and reasonable for risk accessors and risk managers alike. The overall objective is to enable risk assessors to more effectively prepare and present their results for risk managers to use in environmental decision-making. The accompanying case studies offer examples of several different kinds or risk characterizations. EPA is inviting the peer reviewers to provide comments and offer recommendations for enhancing the discussion of principles and processes in the draft Handbook and case studies. EPA will use the peer review comments to revise and complete the Handbook and case studies for Agency assessors and managers to use as one of their tools for implementing the Policy for Risk Characterization.

Dated: February 24, 1999.

Dorothy E. Patton,

Director, Office of Science Policy.

[FR Doc. 99–5234 Filed 3–4–99; 8:45 am]

BILLING CODE 6560–50–M

FEDERAL MARITIME COMMISSION

Notice of Agreement(s) Filed

The Commission hereby gives notice of the filing of the following agreement(s) under the Shipping Act of 1984.

Interested parties can review or obtain copies of agreements at the Washington, DC offices of the Commission, 800 North Capitol Street, N.W., Room 962. Interested parties may submit comments on an agreement to the Secretary, Federal Maritime Commission, Washington, DC 20573, within 10 days of the date this notice appears in the **Federal Register**.

Agreement No.: 202–011346–007

Title: Israel Trade Conference

Parties:

Farrell Lines, Inc.

Zim Israel Navigation Co., Ltd.

Croatia Line d.d.

Synopsis: The proposed modification revises Article 13.1 of the Agreement to reduce the notice period for taking independent action from ten days to 72 hours

Dated: March 1, 1999.

By Order of the Federal Maritime Commission.

Bryant L. VanBrakle,

Secretary.

[FR Doc. 99–5426 Filed 3–4–99; 8:45 am]

BILLING CODE 6730–01–M

FEDERAL RESERVE SYSTEM

Change in Bank Control Notices; Acquisitions of Shares of Banks or Bank Holding Companies

The notificants listed below have applied under the Change in Bank Control Act (12 U.S.C. 1817(j)) and § 225.41 of the Board's Regulation Y (12 CFR 225.41) to acquire a bank or bank holding company. The factors that are considered in acting on the notices are set forth in paragraph 7 of the Act (12 U.S.C. 1817(j)(7)).

The notices are available for immediate inspection at the Federal Reserve Bank indicated. The notices also will be available for inspection at the offices of the Board of Governors. Interested persons may express their views in writing to the Reserve Bank indicated for that notice or to the offices of the Board of Governors. Comments must be received not later than March 19, 1999.

A. Federal Reserve Bank of Minneapolis (JoAnne F. Lewellen, Assistant Vice President) 90 Hennepin Avenue, P.O. Box 291, Minneapolis, Minnesota 55480-0291:

1. Stan Sayler, Hebron, North Dakota; to acquire voting shares of Dakota Community Banshares, Inc., Hebron, North Dakota, and thereby indirectly acquire voting shares of Dakota Community Bank, Hebron, North Dakota.

B. Federal Reserve Bank of Kansas City (D. Michael Manies, Assistant Vice President) 925 Grand Avenue, Kansas City, Missouri 64198-0001:

1. Chris J. Murphy, Omaha, Nebraska; to acquire voting shares of Otoe County Bancorporation, Inc., Nebraska City, Nebraska, and thereby indirectly acquire voting shares of Otoe County Bank & Trust Company, Nebraska City, Nebraska.

Board of Governors of the Federal Reserve System, March 1, 1999.

Robert deV. Frierson,

Associate Secretary of the Board.

[FR Doc. 99–5423 Filed 3-4-99; 8:45 am]

BILLING CODE 6210-01-F

FEDERAL RESERVE SYSTEM

Formations of, Acquisitions by, and Mergers of Bank Holding Companies

The companies listed in this notice have applied to the Board for approval, pursuant to the Bank Holding Company Act of 1956 (12 U.S.C. 1841 *et seq.*) (BHC Act), Regulation Y (12 CFR Part 225), and all other applicable statutes and regulations to become a bank

holding company and/or to acquire the assets or the ownership of, control of, or the power to vote shares of a bank or bank holding company and all of the banks and nonbanking companies owned by the bank holding company, including the companies listed below.

The applications listed below, as well as other related filings required by the Board, are available for immediate inspection at the Federal Reserve Bank indicated. The application also will be available for inspection at the offices of the Board of Governors. Interested persons may express their views in writing on the standards enumerated in the BHC Act (12 U.S.C. 1842(c)). If the proposal also involves the acquisition of a nonbanking company, the review also includes whether the acquisition of the nonbanking company complies with the standards in section 4 of the BHC Act. Unless otherwise noted, nonbanking activities will be conducted throughout the United States.

Unless otherwise noted, comments regarding each of these applications must be received at the Reserve Bank indicated or the offices of the Board of Governors not later than March 29, 1999.

A. Federal Reserve Bank of Kansas City (D. Michael Manies, Assistant Vice President) 925 Grand Avenue, Kansas City, Missouri 64198-0001:

1. Ameriwest Corporation, Omaha, Nebraska; to acquire 32 percent of the voting shares of Otoe County Bancorporation, Inc., Nebraska City, Nebraska, and thereby indirectly acquire Otoe County Bank & Trust Company, Nebraska City, Nebraska.

B. Federal Reserve Bank of St. Louis (Randall C. Sumner, Vice President) 411 Locust Street, St. Louis, Missouri 63102-2034:

1. Reliance Bancshares, Inc., Des Peres, Missouri; to become a bank holding company by acquiring 100 percent of the voting shares of Reliance Bank, Des Peres, Missouri (in organization).

Board of Governors of the Federal Reserve System, March 1, 1999.

Robert deV. Frierson,

Associate Secretary of the Board.

[FR Doc. 99–5422 Filed 3-4-99; 8:45 am]

BILLING CODE 6210-01-F

FEDERAL RESERVE SYSTEM

Notice of Meeting of Consumer Advisory Council

The Consumer Advisory Council will meet on Thursday, March 25, 1999. The meeting, which will be open to public observation, will take place at the Federal Reserve Board's offices in Washington, D.C., in Dining Room E of the Martin Building (Terrace level). The meeting will begin at 8:45 a.m. and is expected to conclude at 1:00 p.m. The Martin Building is located on C Street, Northwest, between 20th and 21st Streets.

The Council's function is to advise the Board on the exercise of the Board's responsibilities under the Consumer Credit Protection Act and on other matters on which the Board seeks its advice. Time permitting, the Council will discuss the following topics:

Privacy. The Depository and Delivery Systems Committee will lead a discussion on concerns among consumers, financial institutions, and others about consumer financial privacy matters.

Community Reinvestment Act. The Bank Regulations Committee will lead a discussion on several issues related to CRA such as the regulation's emphasis on loan volume, the consistency of large bank examinations, and the factors involved in identifying qualified investments.

Credit Card Disclosures. The Consumer Credit Committee will lead a discussion of views on the potential need for legislation involving additional disclosures related to the use of credit cards by consumers.

Members Forum. Individual Council members will present views on economic conditions present within their industries or local economies.

Committee Reports. Council committees will report on their work.

Other matters previously considered by the Council or initiated by Council members also may be discussed.

Persons wishing to submit views to the Council regarding any of the above topics may do so by sending written statements to Ann Bistay, Secretary of the Consumer Advisory Council, Division of Consumer and Community Affairs, Board of Governors of the Federal Reserve System, Washington, D.C. 20551. Information about this meeting may be obtained from Ms. Bistay, 202-452-6470. Telecommunications Device for the Deaf (TDD) users may contact Diane Jenkins, 202-452-3544.

Board of Governors of the Federal Reserve System, March 1, 1999.

Jennifer J. Johnson

Secretary of the Board

[FR Doc. 99-5459 Filed 3-4-99; 8:45AM]

Billing Code 6210-01-F

DEPARTMENT OF HEALTH AND HUMAN SERVICES

Health Resources and Services Administration

National Vaccine Injury Compensation Program: Revised Amount of the Average Cost of a Health Insurance Policy

The Health Resources and Services Administration is publishing an updated monetary amount of the average cost of a health insurance policy as it relates to the National Vaccine Injury Compensation Program (VICP).

Subtitle 2 of Title XXI of the Public Health Service Act, as enacted by the National Childhood Vaccine Injury Act of 1986 and as amended, governs the VICP. The VICP, administered by the Secretary of Health and Human Services (the Secretary), provides that a proceeding for compensation for a vaccine-related injury or death shall be initiated by service upon the Secretary and the filing of a petition with the United States Court of Federal Claims. In some cases, the injured individual may receive compensation for future lost earnings, less appropriate taxes and the ''average cost of a health insurance policy, as determined by the Secretary.''

Section 100.2 of the VICP's implementing regulations (42 CFR Part 100) provides that revised amounts of an average cost of a health insurance policy, as determined by the Secretary, are to be published from time to time in a notice in the **Federal Register**. The previously published amount of an average cost of a health insurance policy was $236.18 per month (63 FR 16264, April 2, 1998); this amount was based on data from a survey by the Health Insurance Association of America, updated by a formula using changes in the medical care component of the Consumer Price Index (CPI) (All Urban Consumers, U.S. City average) for the period January 1, 1997, through December 31, 1997.

The Secretary announces that for the 12-month period, January 1, 1998, through December 31, 1998, the medical care component of the CPI increased 3.4 percent. According to the regulatory formula (§ 100.2), 2 percent is added to the actual CPI change for each year. This adjustment to the CPI change results in an increase of 5.4 percent. Applied to the baseline amount of $236.18, this results in a new amount of $248.93.

Therefore, the Secretary announces that the revised average cost of a health insurance policy under the VICP is $248.93 per month. In accordance with § 100.2, the revised amount was

effective upon its delivery by the Secretary to the United States Court of Federal Claims (formerly known as the United States Claims Court). Such notice was delivered to the Court on January 27, 1999.

Dated: March 1, 1999.

Claude Earl Fox,

Administrator.

[FR Doc. 99–5466 Filed 3–4–99; 8:45 am]

BILLING CODE 4160–15–P

DEPARTMENT OF HEALTH AND HUMAN SERVICES

National Institutes of Health

Notice of Establishment

Pursuant to the Federal Advisory Committee Act, as amended (5 U.S.C. Appendix 2), the Director, National Institutes of Health (NIH), announces the establishment of the Cancer Advisory Panel for Complementary and Alternative Medicine (Panel).

This Panel will advise the Director, National Center for Complementary and Alternative Medicine, the Director, National Cancer Institute, and the Director, NIH, regarding the review and assessment of summaries of evidence for complementary and alternative medicine cancer intervention clinical trials submitted by practitioners, to evaluate whether and how these interventions should be followed up, develop a means of communication of the results of these studies, and to identify future alternative and complementary cancer clinical trials initiatives.

Unless renewed by appropriate action prior to its expiration, the Charter for the Cancer Advisory Panel for Complementary and Alternative Medicine will expire two years from the date of establishment.

Dated: March 1, 1999.

Harold Varmus,

Director, National Institutes of Health.

[FR Doc. 99–5479 Filed 3–4–99; 8:45 am]

BILLING CODE 4140–01–M

DEPARTMENT OF HEALTH AND HUMAN SERVICES

National Institutes of Health

Government-Owned Inventions; Availability for Licensing

AGENCY: National Institutes of Health, Public Health Service, DHHS.

ACTION: Notice.

SUMMARY: The inventions listed below are owned by agencies of the U.S. Government and are available for licensing in the U.S. in accordance with 35 U.S.C. 207 to achieve expeditious commercialization of results of federally-funded research and development. Foreign patent applications are filed on selected inventions to extend market coverage for companies and may also be available for licensing.

ADDRESSES: Licensing information and copies of the U.S. patent applications listed below may be obtained by writing to the indicated licensing contact at the Office of Technology Transfer, National Institutes of Health, 6011 Executive Boulevard, Suite 325, Rockville, Maryland 20852–3804; telephone: 301/496–7057; fax: 301/402–0220. A signed Confidential Disclosure Agreement will be required to receive copies of the patent applications.

Identification of Polymorphisms of the PCTG–4 Gene

RA Philibert, EI Ginns (NIMH)
Provisional U.S. Patent Application No. 60/083,465 filed 29 Apr 98
Licensing Contact: Leopold J. Luberecki, Jr.; 301/496–7735 ext. 223; e-mail: 1187a@nih.gov

Mental retardation affects approximately 1–3% of the U.S. population and results in at least $10 billion in annual treatment costs. Mutations in the X-chromosome may cause 30–50% of all cases of mental retardation. This technology is directed to the identification of an X-linked polymorphism that appears to convey a five-fold increase in the relative risk for mental retardation and is markedly enriched in individuals suffering from autism. The various polymorphisms will likely enable further studies aimed at eliciting the underlying mechanisms of these diseases and may provide a model system for the development of new drugs. It may also have a role as a prognostic indicator.

Combination Therapy with VIP Antagonists

Illana Gozes (Tel Aviv University), Terry W. Moody (NCI), Douglas C. Brenneman (NICHD), Mati Fridkin (Weizman Institute of Science), Edgar Gelber (Tel Aviv University) and Albert Levy (Tel Aviv University)
Serial No. 60/104,472 filed 16 Oct 98 and Serial No. 60/104,907 filed 20 Oct 98
Licensing Contact: Dennis Penn; 301/496–7056 ext. 211; e-mail: dp144q@nih.gov

This invention relates generally to cancer treatment. More particularly, the present invention relates to combination therapy using a polypeptide which is an antagonist of the vasoactive intestinal polypeptide (VIP) and a chemotherapeutic agent, preferably in a pharmaceutical composition.

Vasoactive intestinal polypeptide (VIP) is a widely distributed peptide hormone which mediates a variety of physiological responses including gastrointestinal secretion, relaxation of gastrointestinal vascular and respiratory smooth muscle, lipolysis in adipocytes, pituitary hormone secretion, and excitation and hyperthermia after injection into the central nervous system. Vasoactive intestinal peptide is a 28 amino acid peptide with an amidated C-terminus, the peptide results from post translational processing of a hormone composed of 170 amino acid residues. The VIP peptide has been shown to contain at least two functional regions, a region involved in receptor specific binding and a region involved in biological activity (Gozes and Brenneman, Molecular Neurobiology, 3:201–236 (1989)).

Gozes, et al. have developed a VIP antagonist that has proven useful for altering the function of the vasoactive intestinal peptide. (See, U.S. Patent No. 5,217,953 issued to Gozes, et al. (1993)). This VIP antagonist was designed to retain the binding properties of VIP for its receptor, but to lack the amino acid sequence necessary for biological activity. Studies have shown that this VIP antagonist effectively antagonizes VIP-associated activity. It has been reported that this VIP antagonist inhibits the growth of VIP receptor bearing tumor cells such as, for example, lung tumor cells (i.e., non-small cell lung cancer cells). (See, U.S. Patent No. 5,217,953.)

U.S. Patent No. 5,565,424, which issued to Gozes, et al. on October 15, 1996, discloses another family of polypeptides which are antagonists of the vasoactive intestinal polypeptide. The VIP antagonists disclosed therein are 10–1000 times more efficacious, i.e., more potent in inhibiting VIP-associated activity than previous VIP antagonists. These superactive VIP antagonists were shown to inhibit cancer growth in lung and gioblastoma cells. Examples of superactive VIP antagonists include amino acid sequences referred to as the ''norleucine-hybrid VIP antagonist'', the ''stearyl-norleucine-hybrid VIP antagonist'' and the ''stearyl-hybrid VIP antagonist''.

The present invention relates to a pharmaceutical composition comprising a vasoactive intestinal polypeptide (VIP) antagonist, a chemotherapeutic agent

(such as platinum coordination compounds, topoisomerase inhibitors, antibiotics, antimitotic alkaloids, antimicrotubules, and difluoronucleosides) and a pharmaceutically acceptable carrier. Certain combinations of a VIP antagonist plus a chemotherapeutic agent resulted in a synergistic reduction in the IC50 of 2–7 fold. This synergistic affect was observed in a non-small cell lung cancer, breast cancer, pancreatic cancer, glioblastoma, ovarian, and prostate cancer cell lines.

A Test for Both Sensitivity to and Resistance to Warfarin and Other Drugs Metabolized by CYP2C9 and CYP2A6

Frank J. Gonzalez (NCI) and Jeffery R. Idle (University of Newcastle)
Serial No. 08/750,703 filed 07 Apr 97
Licensing Contact: Dennis Penn; 301/496–7056 ext. 211; e-mail: dp144q@nih.gov

It is well known that genetic polymorphisms in drug metabolizing genes give rise to a variety of phenotypes. This information has been used to advantage in the past for developing genetic assays that predict phenotype and thus predict an individual's ability to metabolize a given drug. The information is of particular volume in determining the likely side effects and therapeutic failures of various drugs.

Drug metabolism is carried out by the cytochrome P450 family of enzymes. For example, the cytochrome P450 isozyme gene, CYP2C9 encodes a high affinity hepatic [S]-warfarin 7-hydroxylase which appears to be principally responsible for the metabolic clearance of the most potent enantiomer of warfarin. Similarly, the cytochrome P450 isozyme gene, CYP2A6, encodes a protein that metabolizes nicotine and coumarin and activates the tobacco-specific nitrosamine 4-(methyinitrosamino)-1-(3-pyridyl)-1-butanone) (NNK). The above gene products are also known to metabolize other substrates, for example, the CYP2C9 gene product is also know to metabolize Tolbutamide, Phenytoin, Ibuprofen, Naproxen, Tienilic acid, Diclofenac and Tetrahydrocannabinol. It follows that genetic polymorphisms or mutations in either of the two aforementioned genes can lead to an impairment in metabolism of at least the aforementioned drugs.

The present invention relates to novel variant alleles incytochrome P450 genes, which express ezymes involved in the metabolism of particular drugs and/or chemical carcinogens. The present invention describes a new mutant or variant CYP2A6 allele wherein the human gene is characterized. This variant allele is designated CYP2A6v2 and its cDNA and genomic sequence are provided in the present invention. Another new gene related to CYP2A6 has been discovered and is designated CYP2A13 and its cDNA and genomic sequence are included.

The objective of this invention is to provide the genetic material, a method, and a kit which enable genotyping of the CYP2C9 and CYP2A65 gene with a view to providing phenotyping information concerning drug metabolism for use in screening and evaluating side effects and therapeutic failures. In addition, the method may be used to screen patients for a predisposition to cancers related to excessive nitrosamine activation, which are associated with mutations within the CYP2A6 gene locus. Further, the method may be used to screen patients for sensitivity to chemical carcinogens, based upon the genotype of the CYP2A6 and/or CYP2C9 alleles.

Method for Detecting a Receptor-Ligand Complex Using a Cytochrome P450 Reporter Gene

Charles L. Crespi (Gentest), Bruce W. Pennman (Gentest), Frank J. Gonzalez (NCI), Harry V. Gelboin (NCI) and Talia Sher (NCI)
Serial No. 08/697,329 filed 22 Aug 96; U.S. Patent 5,726,041 issued 10 Mar 98
Licensing Contact: Dennis Penn; 301/496–7056 ext. 211; e-mail: dp144q@nih.gov

The use of reporter genes to measure the relative activity of a promoter sequence is well known. This invention is directed to methods and compositions for measuring the activity of a promoter sequence in a mammalian cell. The methods involve substituting a DNA sequence encoding a cytochrome P450 for a known reporter gene (e.g. CAT, luciferase) and measuring the relative activity of the expressed cytochrome P450 protein. In contrast to the reporter genes of the prior art, the claimed invention advantageously provides a method for measuring the activity of a promoter sequence in intact mammalian cells that contain a P450 catalysis system using real time light (fluorescence) measurements. Virtually all mammalian cells contain the requisite cytochrome P450 catalysis system. Thus, the invention eliminates the labor-intensive aspects (e.g., cell lysis and separation of cellular components) that are required to practice other methods for measuring the activity of a promoter sequence in a mammalian cell.

The invention also provides a method for detecting the formation of a receptor-ligand complex in a mammalian cell. The cell contains a reported cassette for detecting formation of the receptor-ligand complex and a cytochrome P450 catalysis system. The reporter cassette includes a DNA sequence encoding a cytochrome P450 with a polyadenylation signal sequence operatively coupled to a promoter sequence that is responsive to (i.e., binds to) a DNA binding element present in the receptor-ligand complex. According to one aspect of the invention, this method is useful for detecting the activation of PPARα by peroxisome proliferators.

Restenosis/Atherosclerosis Diagnosis, Prophylaxis, and Therapy

SE Epstein, T Finkel, EH Speir, Y Zhou, J Zhou, L Erdile, S Pincus (NHLBI)
Serial No. 08/796,101 filed 05 Feb 97
Licensing Contact: Manja Blazer; 301/496–7735 ext. 224; e-mail: mb379e@nih.gov

This technology relates to the compositions and methods for the diagnosis, prevention, and therapy of restenosis and atherosclerosis. It involves the use of an agent for decreasing viral load, preferably a vaccine, against cytomegalovirus (CMV) and p53, including a method for providing the therapy and administering the agent. This invention thus relates to stimulating an immune response, preferably a cellular immune response, directed against CMV and p53 inhibit or prevent restenosis, atherosclerosis, and smooth muscle proliferation. Such a response can cause cell death and thus inhibition of smooth muscle cell proliferation, atherosclerosis, and restenosis. Therefore, the technology offers methods for inducing cell death with the purpose of inhibiting smooth muscle proliferation as a means of preventing or treating restenosis and atherosclerosis.

The Use of Lecithin-Cholesterol Acyltransferase (LCAT) in the Treatment of Atherosclerosis

S Santamarina-Fojo, JM Hoeg, B Brewer Jr. (NHLBI)
DHHS Reference No. E–007–96/1 filed 11 Aug 96
Licensing Contact: Manja Blazer; 301/496–7735 ext. 224; e-mail: mb379e@nih.gov

This technology relates to methods for the preventive and therapeutic treatment of atherosclerosis and to diseases relating to a deficiency of

lecithin-cholesterol acyltransferase activity. The plasma protein enzyme lecithin-cholesterol acyltransferase (LCAT) catalyzes the transfer of fatty acid from the sn-2 position of lecithin to the free hydroxyl group of cholesterol. Various mutations of the LCAT gene are known. Individuals who are homozygous for a non-functional LCAT mutant have classic LCAT deficiency disease, characterized by clouding of the cornea, normochromic anemia and glomerulosclerosis. Mutations of the LCAT gene that result in some residual LCAT activity lead to Fish Eye disease, characterized by opacity of the cornea and hypoalphalipoproteinemia. Thus there is a need for compositions and methods for the prevention and therapeutic treatment of atherosclerosis and conditions associated with LCAT deficiency. This invention satisfies this need by providing compositions and methods for increasing the serum level of LCAT activity.

Dated: February 22, 1999.

Jack Spiegel,

Director, Division of Technology Development and Transfer, Office of Technology Transfer.

[FR Doc. 99–5419 Filed 3–4–99; 8:45 am]

BILLING CODE 4140–01–M

DEPARTMENT OF HEALTH AND HUMAN SERVICES

National Institutes of Health

Government-Owned Inventions; Availability for Licensing

AGENCY: National Institutes of Health, Public Health Service, DHHS.

ACTION: Notice.

SUMMARY: The invention listed below is owned by an agency of the U.S. Government and is available for licensing in the U.S. in accordance with 35 U.S.C. 207 to achieve expeditious commercialization of results of federally funded research and development.

ADDRESSES: Licensing information and a copy of the U.S. patent application referenced below may be obtained by contacting J.R. Dixon, Ph.D., at the Office of Technology Transfer, National Institutes of Health, 6011 Executive Boulevard, Suite 325, Rockville, Maryland 20852–3804 (telephone 301/496–7056 ext 206; fax 301/402–0220; E-Mail: jd212g@NIH.GOV). A signed Confidential Disclosure Agreement is required to receive a copy of any patent application.

Entitled: Transcription Factor Decoy and Tumor Growth Inhibitor.

Inventor: Dr. Yoon S. Cho-Chung (NCI) U.S.P.A. 08/977,643—Filed November 24, 1997.

Alteration of gene transcription by inhibition of specific transcriptional regulatory proteins has important therapeutic potential. Synthetic double-stranded phosphorothioate oligonucleotides with high affinity for a target transcription factor can be introduced into cells as decoy cis-elements to bind the factors and alter gene expression. The CRE (cyclic AMP response element)—transcription factor complex is a pleiotropic activator that participates in the induction of a wide variety of cellular and viral genes. Because the CRE cis-element, TGACGTCA, is palindromic, a synthetic single-stranded oligonucleotide composed of the CRE sequence self-hybridizes to form a duplex/hairpin. The CRE-palindromic oligonucleotide can penetrate into cells, compete with CRE enhancers for binding transcription factors, and specifically interfere with CRE- and AP-1-directed transcription in vivo. These oligonucleotides restrained tumor cell proliferation, without affecting the growth of noncancerous cells. This decoy oligonucleotide approach offers great promise as a tool for defining cellular regulatory processes and treating cancer and other diseases.

This research has been published in J. Biol. Chem. 274, 1573–1580 (1999).

This invention is available for licensing on an exclusive or non-exclusive basis.

Dated: February 24, 1999.

Jack Spiegel,

Director, Division of Technology Development and Transfer, Office of Technology Transfer.

[FR Doc. 99–5420 Filed 3–4–99; 8:45 am]

BILLING CODE 4140–01–M

DEPARTMENT OF HEALTH AND HUMAN SERVICES

National Institutes of Health

National Cancer Institute; Notice of Closed Meeting

Pursuant to section 10(d) of the Federal Advisory Committee Act, as amended (5 U.S.C. Appendix 2), notice is hereby given of the following meeting.

The meeting will be closed to the public in accordance with the provisions set forth in sections 552b(c)(4) and 552b(c)(6), Title 5 U.S.C., as amended. The grant applications and the discussions could disclose confidential trade secrets or commercial property such as patentable material, and personal information concerning individuals associated with the grant applications, the disclosure of which would constitute a clearly unwarranted invasion of personal privacy.

Name of Committee: National Cancer for Institute Initial Review Group, Subcommittee A—Cancer Centers.

Date: March 29–30, 1999.

Time: 7:30 am to 1:00 pm.

Agenda: To review and evaluate grant applications.

Place: Embassy Suites, Chevy Chase Pavilion, 4300 Military Rd., Wisconsin at Western Ave., Washington, DC 20015.

Contact Person: David E. Maslow, PhD, Scientific Review Administrator, Grants Review Branch, Division of Extramural Activities, National Cancer Institute, National Institutes of Health, 6130 Executive Boulevard—EPN 643A, Bethesda, MD 20892–7405, 301/496–2330.

(Catalogue of Federal Domestic Assistance Program Nos. 93.392, Cancer Construction; 93.393, Cancer Cause and Prevention Research; 93.394, Caner Detection and Diagnosis Research; 93.395, Cancer Treatment Research; 93.396, Cancer Biology Research; 93.397, Cancer Centers Support; 93.398, Cancer Research Manpower; 93.399, Cancer Control, National Institutes of Health, HHS)

Dated: February 26, 1999.

LaVerne Y. Stringfield,

Committee Management Officer, NIH.

[FR Doc. 99–5410 Filed 3–4–99; 8:45 am]

BILLING CODE 4140–01–M

DEPARTMENT OF HEALTH AND HUMAN SERVICES

National Institutes of Health

National Institute of General Medical Sciences; Notice of Closed Meeting

Pursuant to section 10(d) of the Federal Advisory Committee Act, as amended (5 U.S.C. Appendix 2), notice is hereby given of the following meeting.

The meeting will be closed to the public in accordance with the provisions set forth in sections 552b(c)(4) and 552b(c)(6), Title 5 U.S.C., as amended. The grant applications and the discussions could disclose confidential trade secrets or commercial property such as patentable material, and personal information concerning individuals associated with the grant applications, the disclosure of which would constitute a clearly unwarranted invasion of personal privacy.

Name of Committee: National Institute of General Medical Sciences Special Emphasis Panel, Pharmacology.

Date: March 26, 1999.

Time: 1:00 p.m. to 2:00 p.m.

Agenda: To review and evaluate grant applications.

Place: National Institutes of Health, NIGMS, Office of Scientific Review, Natcher Building, Room 1AS–13, Bethesda, MD 20892, (Telephone Conference Call).

Contact Person: Irene B. Glowinski, PhD., Scientific Review Administrator, Office of Scientific Review, National Institute of General Medical Sciences, National Institutes of Health, Natcher Building, Room 1AS–13, Bethesda, MD 20892, (301) 594–3663.

(Catalogue of Federal Domestic Assistance Program Nos. 93.375, Minority Biomedical Research Support; 93.821, Cell Biology and Biophysics Research; 93.859, Pharmacology, Physiology, and Biological Chemistry Research; 93.862, Genetics and Developmental Biology Research; 93.88, Minority Access to Research Careers; 93.96, Special Minority Initiatives, National Institutes of Health, HHS)

Dated: February 26, 1999.

LaVerne Y. Stringfield,

Committee Management Officer, NIH.

[FR Doc. 99–5412 Filed 3–4–99; 8:45 am]

BILLING CODE 4140–01–M

DEPARTMENT OF HEALTH AND HUMAN SERVICES

National Institutes of Health

National Institute of General Medical Sciences; Notice of Closed Meeting

Pursuant to section 10(d) of the Federal Advisory Committee Act, as amended (5 U.S.C. Appendix 2), notice is hereby given of the following meeting.

The meeting will be closed to the public in accordance with the provisions set forth in section 552b(c)(4) and 552b(c)(6), Title 5 U.S.C., as amended. The grant applications and the discussions could disclose confidential trade secrets or commercial property such as patentable material, and personal information concerning individuals associated with the grant applications, the disclosure of which would constitute a clearly unwarranted invasion of personal privacy.

Name of Committee: National Institute of General Medical Sciences Special Emphasis Panel, Trauma and Burn.

Date: March 10, 1999.

Time: 1:00 p.m. to 3:00 p.m.

Agenda: To review and evaluate grant applications.

Place: National Institutes of Health, NIGMS, Office of Scientific Review, Natcher Building, Room 1AS19K, Bethesda, MD 20892, (Telephone Conference Call).

Contact Person: Bruce K. Wetzel, PhD., Scientific Review Administrator, Office of Scientific Review, NIGMS, Natcher Building, Room 1AS–19, Bethesda, MD 20892, (301) 594–3907.

This notice is being published less than 15 days prior to the meeting due to the timing limitations imposed by the review and funding cycle.

(Catalog of Federal Domestic Assistance Program Nos. 93.375, Minority Biomedical Research Support; 93.821, Cell Biology and Biophysics Research; 93.859, Pharmacology, Physiology, and Biological Chemistry Research; 93.862, Genetics and Developmental Biology Research; 93.88, Minority Access to Research Careers; 93.96, Special Minority Initiatives, National Institutes of Health, HHS)

Dated: February 26, 1999.

LaVerne Y. Stringfield,

Committee Management Officer, NIH.

[FR Doc 99–5413 Filed 3–4–99; 8:45 am]

BILLING CODE 4140–01–M

DEPARTMENT OF HEALTH AND HUMAN SERVICES

National Institutes of Health

National Institute of Child Health and Human Development; Notice of Closed Meeting

Pursuant to section 10(d) of the Federal Advisory Committee Act, as amended (5 U.S.C. Appendix 2), notice is hereby given of the following meeting.

The meeting will be closed to the public in accordance with the provisions set forth in sections 552b(c)(4) and 552b(c)(6), Title 5 U.S.C., as amended. The grant applications and the discussions could disclose confidential trade secrets or commercial property such as patentable material, and personal information concerning individuals associated with the grant applications, the disclosure of which would constitute a clearly unwarranted invasion of personal privacy.

Name of Committee: National Institute of Child Health and Human Development Initial Review Group, Population Research Subcommittee.

Date: March 11, 1999.

Time: 2:00 p.m. to 4:00 p.m.

Agenda: To review and evaluate grant applications.

Place: 6100 Executive Blvd., Room 5E01, Rockville, MD 20852, (Telephone Conference Call).

Contact Person: Jon M. Ranhand, Phd., Health Scientist Administrator, Division of Scientific Review, National Institute of Child Health, and Human Development, 6100 Executive Blvd., Rm 5E01, MSC 7510, Bethesda, MD 20892, (301) 435–6884.

This notice is being published less than 15 days prior to the meeting due to the timing limitations imposed by the review and funding cycle.

(Catalogue of Federal Domestic Assistance Program Nos. 93.209, Contraception and Infertility Loan Repayment Program; 93.864, Population Research; 93.865, Research for Mothers and Children; 93.929, Center for Medical Rehabilitation Research, National Institutes of Health, HHS).

Dated: February 26, 1999.

LaVerne Y. Stringfield,

Committee Management Officer, NIH.

[FR Doc. 99–5414 Filed 3–4–99; 8:45 am]

BILLING CODE 4140–01–M

DEPARTMENT OF HEALTH AND HUMAN SERVICES

National Institutes of Health

National Institute of Neurological Disorders and Stroke; Amended Notice of Meeting

Notice is hereby given of a change in the meeting of the National Institute of Neurological Disorders and Stroke Special Emphasis Panel, February 26, 1999, 9:00 a.m. to February 26, 1999, 10:00 a.m., Hotel Washington, 15th St. & Pennsylvania Ave., NW, Washington, DC 20005, which was published in the **Federal Register** on January 28, 1999, 64 FR 4456.

The meeting will now be held as a teleconference on March 2 from 1:00–3:00 p.m. at NIH/NINDS, Federal Building, Room 9C10, 7550 Wisconsin Ave., Bethesda, MD 20892. The meeting is closed to the public.

Dated: February 25, 1999.

LaVerne Y. Stringfield,

Committee Management Officer, NIH.

[FR Doc. 99–5415 Filed 3–4–99; 8:45 am]

BILLING CODE 4140–01–M

DEPARTMENT OF HEALTH AND HUMAN SERVICES

National Institutes of Health

National Institute of Neurological Disorders and Stroke; Amended Notice of Meeting

Notice is hereby given of a change in the meeting of the National Institute Of Neurological Disorders and Stroke Special Emphasis Panel, February 23, 1999, 3:30 PM to February 23, 1999, 4:30 PM, 7550 WISCONSIN AVENUE, FEDERAL BUILDING, ROOM 9C10, BETHESDA, MD 20814–9692 which was published in the **Federal Register** on February 17, 1999, 64 FR 7902.

The meeting will be held as a teleconference on March 2, 1999 from 3:00–4:00 PM at NIH/NINDS, Federal Building, Room 9C10, 7550 Wisconsin Ave., Bethesda, MD 20892. The meeting is closed to the public.

Dated: February 25, 1999.

LaVerne Y. Stringfield,

Committee Management Officer, NIH.

[FR Doc. 99–5416 Filed 3–4–99; 8:45 am]

BILLING CODE 4140–01–M

DEPARTMENT OF HEALTH AND HUMAN SERVICES

National Institutes of Health

National Institute on Aging; Notice of Closed Meetings

Pursuant to section 10(d) of the Federal Advisory Committee Act, as amended (5 U.S.C. Appendix 2), notice is hereby given of the following meetings.

The meetings will be closed to the public in accordance with the provisions set forth in sections 552b(c)(4) and 552b(c)(6), Title 5 U.S.C., as amended. The grant applications and the discussions could disclose confidential trade secrets or commercial property such as patentable material, and personal information concerning individuals associated with the grant applications, the disclosure of which would constitute a clearly unwarranted invasion of personal privacy.

Name of Committee: National Institute on Aging Special Emphasis Panel Contract proposal to maintain a colony of aging, obese, diabetic monkeys.

Date: March 19, 1999.

Time: 1;00 p.m. to 4:00 p.m.

Agenda: To review and evaluate grant applications.

Place: 7201 Wisconsin, Suite 502C, Bethesda, MD 20892, (Telephone Conference Call).

Contact Person: Arthur D. Schaerdel, DVM, Scientific Review Administrator, the Bethesda Gateway Building, 7201 Wisconsin Avenue/Suite 2C212, Bethesda, MD 20892, (301) 496–9666.

Name of Committee: National Institute on Aging Special Emphasis Panel Aging Brain: Vasculature, Ischemia, and Behavior.

Date: March 23, 1999.

Time: 1:00 p.m. to 5:00 p.m.

Agenda: To review and evaluate grant applications.

Place: Hilton Los Angeles Airport Hotel, 5711 W Century Blvd., Los Angeles, CA 90045

Contact Person: Jeffrey M. Chernak, PhD., Gateway Building, 7201 Wisconsin Avenue/Suite 2C212, Bethesda, MD 20892, (301) 496–9666.

Name of Committee: National Institute on Aging Special Emphasis Panel, Review of Demography Centers Applications.

Date: April 7–9, 1999.

Time: 7:00 p.m. to 5:00 p.m.

Agenda: To review and evaluate grant applications.

Place: Holiday Inn of Gaithersburg, #2 Montgomery Village Avenue, Gaithersburg, MD 20879.

Contact Person: Paul Lenz, PhD., Scientific Review Administrator, the Bethesda Gateway Building, 7201 Wisconsin Avenue/Suite 2C212, Bethesda, MD 20892, (301) 496–9666.

(Catalogue of Federal Domestic Assistance Program Nos. 93.866, Aging Research, National Institutes of Health, HHS)

Dated: February 25, 1999.

LaVerne Y. Stringfield,

Committee Management Officer, NIH.

[FR Doc. 99–5417 Filed 3–4–99; 8:45 am]

BILLING CODE 4140–01–M

DEPARTMENT OF HEALTH AND HUMAN SERVICES

National Institutes of Health

National Institute on Alcohol Abuse and Alcoholism; Notice of Closed Meeting

Pursuant to section 10(d) of the Federal Advisory Committee Act, as amended (5 U.S.C. Appendix 2), notice is hereby given of the following meeting.

The meeting will be closed to the public in accordance with the provisions set forth in sections 552b(c)(4) and 552b(c)(6), Title 5 U.S.C., as amended. The grant applications and the discussions could disclose confidential trade secrets or commercial property such as patentable material, and personal information concerning individuals associated with the grant applications, the disclosure of which would constitute a clearly unwarranted invasion of personal privacy.

Name of Committee: National Institute on Alcohol Abuse and Alcoholism Special Emphasis Panel.

Date: March 5, 1999.

Time: 8:00 am to 5:00 pm.

Agenda: To review and evaluate grant applications.

Place: Georgetown Holiday Inn, 2101 Wisconsin Ave, N.W., Washington, DC 20007.

Contact Person: Sean O'Rourke, MS, Scientific Review Administrator.

This notice is being published less than 15 days prior to the meeting due to the timing limitations imposed by the review and funding cycle.

(Catalogue of Federal Domestic Assistance Program Nos. 93.271, Alcohol Research Career Development Awards for Scientists and Clinicians; 93.272, Alcohol National Research Service Awards for Research Training; 93.273, Alcohol Research Programs; 93.891, Alcohol Research Center Grants, National Institutes of Health, HHS)

Dated: February 25, 1999.

LaVerne Y. Stringfield,

Committee Management Officer, NIH.

[FR Doc. 99–5418 Filed 3–4–99; 8:45 am]

BILLING CODE 4140–01–M

DEPARTMENT OF HEALTH AND HUMAN SERVICES

National Institutes of Health

National Institute of General Medical Sciences; Notice of Closed Meeting

Pursuant to section 10(a) of the Federal Advisory Committee Act, as amended (5 U.S.C. Appendix 2), notice is hereby given of the following meeting.

The meeting will be closed to the public in accordance with the provisions set forth in sections 552b(c)(4) and 552b(c)(6). Title 5 U.S.C., as amended. The grant applications and the discussions could disclose confidential trade secrets or commercial property such as patentable material, and personal information concerning individuals associated with the grant applications, the disclosure of which would constitute a clearly unwarranted invasion of personal privacy.

Name of Committee: National Institute of General Medical Sciences Special Emphasis Panel, MBRS Special Emphasis Panel.

Date: March 29, 1999.

Time: 8:30 am to 4:00 pm.

Agenda: To review and evaluate grant applications.

Place: Holiday Inn Bethesda, 8120 Wisconsin Ave., Bethesda, MD 20814.

Contact Person: Rebecca Hackett, Phd., Scientific Review Administrator, Office of Scientific Review, NIGMS, Natcher Building, Room 1AS19J, Bethesda, MD 20892, (301) 594–2771.

(Catalogue of Federal Domestic Assistance Program Nos. 93.375, Minority Biomedical Research Support; 93.821, Cell Biology and Biophysics Research; 93.859, Pharmacology, Physiology, and Biological Chemistry Research, 93.862, Genetics and Developmental Biology Research; 93.88, Minority Access to Research Careers, 93.96, Special Minority Initiatives, National Institutes of Health, HHS).

Dated: February 26, 1999.

LaVerne Y. Stringfield,

Committee Management Officer, NIH.

[FR Doc. 99–5480 Filed 3–4–99; 8:45 am]

BILLING CODE 4140–01–M

DEPARTMENT OF HEALTH AND HUMAN SERVICES

National Institutes of Health

Center for Scientific Review, Notice of Closed Meetings

Pursuant to section 10(d) of the Federal Advisory Committee Act, as amended (5 U.S.C. Appendix 2), notice is hereby given of the following meetings.

The meetings will be closed to the public in accordance with the

provisions set forth in sections 552b(c)(4) and 552b(c)(6), Title 5, U.S.C., as amended. The grant applications and the discussions could disclose confidential trade secrets or commercial property such as patentable material, and personal information concerning individuals associated with the grant applications, the disclosure of which would constitute a clearly unwarranted invasion of personal privacy.

Name of Committee: Center for Scientific Review Special Emphasis Panel.
Date: March 4–5, 1999.
Time: 8:30 a.m. to 6:00 p.m.
Agenda: To review and evaluate grant applications.
Place: Latham Hotel Georgetown, 3000 M Street, NW, Washington, DC 20007.
Contact Person: Anthony Carter, Ph.D., Scientific Review Administrator, Center for Scientific Review, National Institutes of Health, 6701 Rockledge Drive, Room 5142, MSC 7840, Bethesda, MD 20892, (301) 435–1024.
This notice is being published less than 15 days prior to the meeting due to the timing limitations imposed by the review and funding cycle.

Name of Committee: Center for Scientific Review Special Emphasis Panel.
Date: March 9–10, 1999.
Time: 6:00 a.m. to 6:00 p.m.
Agenda: To review and evaluate grant applications.
Place: Hotel Sofitel, 1914 Connecticut Ave, NW., Washington, DC 20009.
Contact Person: Nancy Lamontagne, Ph.D., Scientific Review Administrator, Center for Scientific Review, National Institutes of Health, 6701 Rockledge Drive, Room 4170, MSC 7806, Bethesda, MD 20892, (301) 435–1726.
This notice is being published less than 15 days prior to the meeting due to the timing limitations imposed by the review and funding cycle.

Name of Committee: Center for Scientific Review Special Emphasis Panel (SSS-Z).
Date: March 10–11, 1999.
Time: 8:00 a.m. to 5:00 p.m.
Agenda: To review and evaluate grant applications.
Place: Bethesda Ramada Inn, 8400 Wisconsin Ave, Bethesda, MD 20814.
Contact Person: Ron Manning, Ph.D., Scientific Review Administrator, Center for Scientific Review, National Institutes of Health, 6701 Rockledge Drive, Room 4158, MSC 7806, Bethesda, MD 20892, (301) 435–1723.
This notice is being published less than 15 days prior to the meeting due to the timing limitations imposed by the review and funding cycle.

Name of Committee: Cardiovascular Sciences Initial Review Group, Hematology Subcommittee 2.
Date: March 10–11, 1999.
Time: 8:30 a.m. to 5:00 p.m.
Agenda: To review and evaluate grant applications.
Place: Holiday Inn-Bethesda, 8120 Wisconsin Ave, Bethesda, MD 20814.
Contact Person: Jerrold Fried, Ph.D., Scientific Review Administator, Center for Scientific Review, National Institutes of Health, 6701 Rockledge Drive, Room 4126, MSC 7802, Bethesda, MD 20892, (301) 435–1777.
This notice is being published less than 15 days prior to the meeting due to the timing limitations imposed by the review and funding cycle.

Name of Committee: Center for Scientific Review Special Emphasis Panel.
Date: March 10–11, 1999.
Time: 9:00 a.m. to 5:00 p.m.
Agenda: To review and evaluate grant applications.
Place: Holiday Inn, 5520 Wisconsin Ave, Chevy Chase, MD 20815.
Contact Person: Anita Miller Sostek, Ph.D., Scientific Review Administrator, Center for Scientific Review, National Institutes of Health, 6701 Rockledge Drive, Room 3176, MSC 7848, Bethesda, MD 20892, (301) 435–1260.
This notice is being published less than 15 days prior to the meeting due to the timing limitations imposed by the review and funding cycle.

Name of Committee: Center for Scientific Review Special Emphasis Panel.
Date: March 10, 1999.
Time: 10 a.m. to 5 p.m.
Agenda: To review and evaluate grant applications.
Place: Holiday Inn—Crystal City, 1489 Jefferson Davis Highway, Arlington, VA 22202.
Contact Person: Garrett V. Keefer, PhD., Scientific Review Administrator, Center for Scientific Review, National Institutes of Health, 6701 Rockledge Drive, Room 4190, MSC 7808, Bethesda, MD 20892, (301) 435–1152.
This notice is being published less than 15 days prior to the meeting due to the timing limitations imposed by the review and funding cycle.

Name of Committee: Center for Scientific Review Special Emphasis Panel.
Date: March 10, 1999.
Time: 2 p.m. to 3 p.m.
Agenda: To review and evaluate grant applications.
Place: NIH, Rockledge 2, Bethesda, MD 20892, (Telephone Conference Call).
Contact Person: Gerhard Ehrenspeck, MS, PhD., Scientific Review Administrator, Center for Scientific Review, National Institutes of Health, 6701 Rockledge Drive, Room 5138, MSC 7840, Bethesda, MD 20892, (301) 435–1022, ehrenspeckg@nih.csr.gov.
This notice is being published less than 15 days prior to the meeting due to the timing limitations imposed by the review and funding cycle.

Name of Committee: Center for Scientific Review Special Emphasis Panel, ZRG1–SSS9(20)–SRB.
Date: March 10–11, 1999.
Time: 6 p.m. to 10 p.m.
Agenda: To review and evaluate grant applications.
Place: Baltimore Washington International Sheraton Hotel, 7032 Elm Road, Baltimore, MD 21240.
Contact Person: Bill Bunnag, PhD., Scientific Review Administrator, Center for Scientific Review, National Institutes of Health, 6701 Rockledge Drive, Room 5124, MSC 7854, Bethesda, MD 20892–7854, (301) 435–1177, bunnagb@csr.nih.gov.
This notice is being published less than 15 days prior to the meeting due to the timing limitations imposed by the review and funding cycle.

Name of Committee: Center for Scientific Review Special Emphasis Panel.
Date: March 11–12, 1999.
Time: 8:30 a.m. to 5 p.m.
Agenda: To review and evaluate grant applications.
Place: Latham Hotel Georgetown, 3000 M Street, NW., Washington, DC 20007.
Contact Person: Patricia H. Hand, PhD., Scientific Review Administrator, Center for Scientific Review, National Institutes of Health, 6701 Rockledge Drive, Room 4140, MSC 7804, Bethesda, MD 20892, (301) 435–1767.
This notice is being published less than 15 days prior to the meeting due to the timing limitations imposed by the review and funding cycle.

Name of Committee: Biobehavioral and Social Sciences Initial Review Group, Behavioral Medicine Study Section.
Date: March 11–12, 1999.
Time: 8:30 a.m. to 2:30 p.m.
Agenda: To review and evaluate grant applications.
Place: Holiday Inn Chevy Chase, 5520 Wisconsin Avenue, Chevy Chase, MD 20815.
Contact Person: Michael Mickln, PhD., Scientific Review Administrator, Center for Scientific Review, National Institutes of Health, 6701 Rockledge Drive, Room 5198, MSC 7848, Bethesda, MD 20892, (301) 435–1258.
This notice is being published less than 15 days prior to the meeting due to the timing limitations imposed by the review and funding cycle.

Name of Committee: Genetic Sciences Initial Review Group, Biological Sciences Subcommittee 1.
Date: March 11–12, 1999.
Time: 8:30 a.m. to 4 p.m.
Agenda: To review and evaluate grant applications.
Place: Embassy Suites Chevy Chase Pavilion, 4300 Military Road, NW., Washington, DC 20015.
Contact Person: Nancy Pearson, PhD., Scientific Review Administrator, Center for Scientific Review, National Institutes of Health, 6701 Rockledge Drive, Room 6178, MSC 7890, Bethesda, MD 20892, (301) 435–1047.
This notice is being published less than 15 days prior to the meeting due to the timing limitations imposed by the review and funding cycle.

Name of Committee: Center for Scientific Review Special Emphasis Panel, The History of Medicine.
Date: March 12, 1999.
Time: 8:30 a.m. to 2:00 p.m.

Agenda: To review and evaluate grant applications.

Place: Ramada Inn, 1775 Rockville Pike, Rockville, MD 20852.

Contact Person: Luigi Giacometti, PhD., Scientific Review Administrator, Center for Scientific Review, National Institutes of Health, 6701 Rockledge Drive, Room 5208, MSC 7850, Bethesda, MD 20892, (301) 435–1246.

This notice is being published less than 15 days prior to the meeting due to the timing limitations imposed by the review and funding cycle.

Name of Committee: Center for Scientific Review Special Emphasis Panel.

Date: March 12, 1999.

Time: 8:30 a.m. to 5:00 p.m.

Agenda: To review and evaluate grant applications.

Place: Holiday Inn, 5520 Wisconsin Ave., Palladian West, Chevy Chase, MD 20815.

Contact Person: Cheri Wiggs, PhD., Scientific Review Administrator, Center for Scientific Review, National Institutes of Health, 6701 Rockledge Drive, Room 5194, MSC 7848, Bethesda, MD 20892, (301) 435–1261.

This notice is being published less than 15 days prior to the meeting due to the timing limitations imposed by the review and funding cycle.

Name of Committee: Center for Scientific Review Special Emphasis Panel.

Date: March 12, 1999.

Time: 3:00 p.m. to 5:00 p.m.

Agenda: To review and evaluate grant applications.

Place: NIH, Rockledge 2, Bethesda, MD 20892, (Telephone Conference Call.)

Contact Person: Paul K. Strudler, PhD., Scientific Review Administrator, Center for Scientific Review, National Institutes of Health, 6701 Rockledge Drive, Room 4100, MSC 7804, Bethesda, MD 20892, (301) 435–1716.

This notice is being published less than 15 days prior to the meeting due to the timing limitations imposed by the review and funding cycle.

(Catalogue of Federal Domestic Assistance Program Nos. 93.306, Comparative Medicine, 93.306; 93.333, Clinical Research, 93.333, 93.337, 93.393–93.396, 93.837–93.844, 93.846–93.878, 93.982, 93.893, National Institutes of Health, HHS)

Dated: February 26, 1999.

LaVerne Y. Stringfield,

Committee Management Officer, NIH.

[FR Doc. 99–5411 Filed 3–4–99; 8:45 am]

BILLING CODE 4140–01–M

DEPARTMENT OF HEALTH AND HUMAN SERVICES

National Institutes of Health

Prospective Grant of Exclusive License: Conjugate Vaccines To Prevent Disease Caused by Nontypeable Haemophilus influenzae and Moraxella catarrahalis, Particularly Otitis Media

AGENCY: National Institutes of Health, Public Health Service, DHHS.

ACTION: Notice.

SUMMARY: This is notice, in accordance with 35 U.S.C. 209(c)(1) and 37 CFR 404.7(a)(1)(I), that the National Institutes of Health (NIH), Department of Health and Human Services, is contemplating the grant of a exclusive license worldwide to practice the invention embodied in: U.S. Patent Application Serial Number 08/842,409, entitled ''Conjugate Vaccine for Nontypeable H. *influenzae*'', filed April 23, 1997 and U.S. Provisional Patent Application Serial Number 60/071,483, entitled ''Lipooligosaccharide-Based Vaccine for Prevention of *Moraxella (Branhamella) catarrhalis* Infections in Humans'', filed January 13, 1998, to American Home Products Corporation through its Wyeth-Ayerst Laboratory Division, Wyeth-lederle Vaccines business unit, having a place of business in Madison, NJ. The patent rights in these inventions have been assigned to the United States of America.

DATES: Only written comments and/or application for a license which are received by the NIH Office of Technology Transfer on or before May 4, 1999.

ADDRESSES: Requests for a copy of the patent applications, inquiries, comments and other materials relating to the contemplated license should be directed to: Robert Benson, Office of Technology Transfer, National Institutes of Health, 6011 Executive Boulevard, Suite 325, Rockville, MD 20852–3804; Telephone: (301) 496–7056, ext. 267; Facsimile: (301) 402–0220.

SUPPLEMENTARY INFORMATION: The two patent applications describe conjugates of detoxified lipooligosaccharide (dLOS), isolated from the cellular membrane of either nontypeable *H. influenzae* or *M. catarrhalis*, and a carrier protein, exemplified by tetanus toxoid. These conjugates have been shown to raise bactericidal antibodies against the bacterial strain from which the dLOS was isolated and are also cross-reactive with different strains.

The prospective co-exclusive license will be royalty-bearing and will comply with the terms and conditions of 35 U.S.C. 209 and 37 CFR 404.7. The prospective exclusive license may be granted unless, within 60 days from the date of this published Notice, NIH receives written evidence and argument that establishes that the grant of the license would not be consistent with the requirements of 35 U.S.C. 209 and 37 CFR 404.7.

The field of use may be limited to the development of vaccines for the prevention or treatment of diseases in humans caused by infection with nontypeable *H. influenzae* and *M. catarrhalis.*

Properly filed competing applications for a license filed in response to this notice will be treated as objections to the contemplated license. Comments and objections submitted in response to this notice will not be made available for public inspection, and, to the extent permitted by law, will not be released under the Freedom of Information Act, 5 U.S.C. 552.

Dated: February 22, 1999.

Jack Spiegel,

Director, Division of Technology Development and Transfer, Office of Technology Transfer.

[FR Doc. 99–5421 Filed 3–4–99; 8:45 am]

BILLING CODE 4140–01–M

DEPARTMENT OF HOUSING AND URBAN DEVELOPMENT

[Docket No. FR–4445–N–05]

Notice of Proposed Information Collection: Comment Request

AGENCY: Office of the Assistant Secretary for Housing, HUD.

ACTION: Notice.

SUMMARY: The proposed information collection requirement described below will be submitted to the Office of Management and Budget (OMB) for review, as required by the Paperwork Reduction Act. The Department is soliciting public comments on the subject proposal.

DATES: Comments due date: May 4, 1999.

ADDRESSES: Interested persons are invited to submit comments regarding this proposal. Comments should refer to the proposal by name and/or OMB Control Number and should be sent to: Wayne Eddins, Reports Management Officer, Department of Housing and Urban Development, 451 7th Street, SW, Room 4176, Washington, DC 20410.

FOR FURTHER INFORMATION CONTACT: Marc Harris, Office of Multifamily Housing, telephone number (202) 708–

0216, (this is not a toll-free number) for copies of the proposed forms and other available documents.

SUPPLEMENTARY INFORMATION: The Department is submitting the proposed information collection to OMB for review, as required by the Paperwork Reduction Act of 1995 (44 U.S.C. Chapter 35, as amended).

This Notice is soliciting comments from members of the public and affected agencies concerning the proposed collection of information to: (1) Evaluate whether the proposed collection of information is necessary for the proper performance of the functions of the agency, including whether the information will have practical utility; (2) Evaluate the accuracy of the agency's estimate of the burden of the proposed collection of information; (3) Enhance the quality, utility, and clarity of the information to be collected; and (4) Minimize the burden of the collection of information on those who are to respond; including the use of appropriate automated collection techniques or other forms of information technology, e.g., permitting electronic submission of responses.

This Notice also lists the following information:

Title of Proposal: Request for Proposals—Contact Administrators for Project-Based Section 8 Housing Assistance Contracts.

OMB Control Number, if applicable: 2502–0528.

Description of the need for the information and proposed use: This information collection is essential to the implementation of improved administration of over 20,000 Section 8 contracts. These contracts represent an investment of over $6 billion to support the physical and financial well-being of affordable housing on a nationwide basis.

Agency Form Numbers, if applicable: None.

Estimation of the total numbers of hours needed to prepare the information collection including number of respondents, frequency of response, and hours of response: The estimated number of respondents is 250, the total annual responses are 370, and the total annual hours of response are estimated at 5600.

Status of the proposed information collection: New collection.

Authority: The Paperwork Reduction Act of 1995, 44 U.S.C., Chapter 35, as amended.

Dated: February 20, 1999.

William C. Apgar,

Assistant Secretary for Housing-Federal Housing Commissioner.

[FR Doc. 99–5453 Filed 3–4–99; 8:45 am]

BILLING CODE 4210–27–M

DEPARTMENT OF HOUSING AND URBAN DEVELOPMENT

[Docket No. FR–443–N–02]

Notice of Submission of Proposed Information Collection to OMB; Emergency Comment Request

AGENCY: Office of the Assistant Secretary for Public and Indian Housing, HUD.

ACTION: Notice.

SUMMARY: The proposed information collection requirement described below has been submitted to the Office of Management and Budget (OMB) for emergency review and approval, as required by the Paperwork Reduction Act. The Department is soliciting public comments on the subject proposal.

DATES: Comments Due Date: March 12, 1999.

ADDRESSES: Interested persons are invited to submit comments regarding this proposal. Comments must be received within seven (7) days from the date of this Notice. Comments should refer to the proposal by name and should be sent to: Joseph F. Lackey, Jr., HUD Desk Officer, Office of Management and Budget, New Executive Office Building, Washington, DC 20503.

FOR FURTHER INFORMATION CONTACT: Wayne Eddins, Reports Management Officer, Department of Housing and Urban Development, 451 Seventh Street, SW, Washington, DC 20410, telephone (202) 708–0050. This is not a toll-free number. Copies of available documents submitted to OMB may be obtained from Mr. Eddins.

SUPPLEMENTARY INFORMATION: This Notice informs the public that the Department of Housing and Urban Development (HUD) has submitted to OMB, for emergency processing, an information collection package with respect to energy consumption and excessive energy costs in public housing. The information request will meet a request from U.S. Senate Commission on Appropriations Report 105–216.

Reports are required to Congress by April 19 and June 1, 1999. Emergency processing is required to provide sufficient time to submit the survey and to collect and process the incoming data. Emergency processing is also required to provide sufficient time to complete the reports and to have adequate time for review.

This Notice is soliciting comments from members of the public and affecting agencies concerning the proposed collection of information to: (1) Evaluate the accuracy of the agency's estimate of the burden of the proposed collection of information; (2) Enhance the quality, utility, and clarity of the information to be collected; and (3) Minimize the burden of the collection of information on those who are to respond; including through the use of appropriate automated collection techniques or other forms of information technology, e.g, permitting electronic submission of responses.

This Notice also lists the following information:

Title of Proposal: Energy Conservation Reporting Requirement.

OMB Control Number, if applicable: Description of the need for the information and proposed use: The data to be collected will be used to respond to a congressional request and will be used to complete reports on energy consumption and excessive energy costs in public housing.

Agency form numbers, if applicable: Members of affected public: Public Housing Authorities.

Estimation of the total numbers of hours needed to prepare the information collection including number of respondents, frequency of response, and hours of response: It will take approximately 3 hours per housing development and a total of approximately 39,729 labor hours for all public housing authorities to respond.

Status of the proposed information collection: Awaiting OMB approval.

Authority: The Paperwork Reduction Act of 1995, 44 U.S.C. Chapter 35, as amended.

Dated: February 26, 1999.

David S. Cristy,

Director, IRM Policy and Management Division.

[FR Doc. 99–5452 Filed 3–4–99; 8:45 am]

BILLING CODE 4210–33–M

DEPARTMENT OF HOUSING AND URBAN DEVELOPMENT

[Docket No. FR–4445–N–06]

Submission for OMB Review: Comment Request

AGENCY: Office of the Assistant Secretary for Housing, HUD.

ACTION: Notice.

SUMMARY: The proposed information collection requirement described below

has been submitted to the Office of Management and Budget (OMB) for review, as required by the Paperwork Reduction Act. The Department is soliciting public comments on the subject proposal.

DATES: Comments due date: March 12, 1999.

ADDRESSES: Interested persons are invited to submit comments regarding this proposal. Comments must be received within (7) days from the date of this Notice. Comments should refer to the proposal by name and/or OMB approval number should be sent to: Joseph F. Lackey, Jr., HUD Desk Officer, Office of Management and Budget, New Executive Office Building, Washington, DC 20503.

FOR FURTHER INFORMATION CONTACT: Wayne Eddins, Reports Management Officer, Department of Housing and Urban Development, 451 7th Street, NW, Washington, DC 20410, telephone (202) 708–3055 (this is not a toll-free number. Copies of the proposed forms and other available documents submitted to OMB maybe obtained from Mr. Eddins.

SUPPLEMENTARY INFORMATION: This Notice informs the public that the Department of Housing and Urban Development (HUD) has submitted to OMB, for emergency processing, an information collection package with respect to the implementation of improved administration of over 20,000 Section 8 contracts. These contracts represent an investment of over $6 billion to support the physical and financial well-being of affordable housing on a nationwide basis.

This Notice is soliciting comments from members of the public and affected agencies concerning the proposed collection of information to: (1) Evaluate whether the proposed collection of information is necessary for the proper performance of the functions of the agency, including whether the information will have practical utility; (2) evaluate the accuracy of the agency's estimate of the burden of the proposed collection of information; (3) enhance the quality, utility, and clarity of the information to be collected; and (4) minimize the burben of the collection of information on those who are to respond; including through the use of appropriate automated collection techniques or other forms of information technology, e.g., permitting electronic submission of responses.

This Notice also lists the following information:

Title of Proposal: Request for Proposals—Contract Administrators for Project-Based Section 8 Housing Assistance Contracts.

OMB Control Number, if applicable: 2502–0528.

Agency form numbers, if applicable: None.

Members of affected public: Not for profit institutions.

Estimation of the total numbers of hours needed to prepare the information collection including number of respondents, frequency of response, and hours of response: The estimated number of respondents are 250, the total annual responses are 370, and the annual burden hours are 5,600.

Authority: The Paperwork Reduction Act of 1995, 44 U.S.C. 35, as amended.

Dated: February 25, 1999.

David S. Cristy,

Director, IRM Policy and Management Division.

[FR Doc. 99–5454 Filed 3–4–99; 8:45 am]

BILLING CODE 4210–27–M

DEPARTMENT OF HOUSING AND URBAN DEVELOPMENT

[Docket No. FR–4432–N–09]

Federal Property Suitable as Facilities To Assist the Homeless

AGENCY: Office of the Assistant Secretary for Community Planning and Development, HUD.

ACTION: Notice.

SUMMARY: This Notice identifies unutilized, underutilized, excess, and surplus Federal property reviewed by HUD for suitability for possible use to assist the homeless.

FOR FURTHER INFORMATION CONTACT: Mark Johnston, room 7256, Department of Housing and Urban Development, 451 Seventh Street SW, Washington, DC 20410; telephone (202) 708–1226; TTY number for the hearing- and speech-impaired (202) 708–2365 (these telephone numbers are not toll-free), or call the toll-free Title V information line at 1–800–927–7588.

SUPPLEMENTARY INFORMATION: In accordance with 24 CFR part 581 and section 501 of the Stewart B. McKinney Homeless Assistance Act (42 U.S.C. 11411), as amended, HUD is publishing this Notice to identify Federal buildings and other real property that HUD has reviewed for suitability for use to assist the homeless. The properties were reviewed using information provided to HUD by Federal landholding agencies regarding unutilized and underutilized buildings and real property controlled by such agencies or by GSA regarding its inventory of excess or surplus Federal property. This Notice is also published in order to comply with the December 12, 1988 Court Order in *National Coalition for the Homeless* v. *Veterans Administration*, No 88–2503–OG (D.D.C.).

Properties reviewed are listed in this Notice according to the following categories: Suitable/available, suitable/unavailable, suitable/to be excess, and unsuitable. The properties listed in the three suitable categories have been reviewed by the landholding agencies, and each agency has transmitted to HUD: (1) Its intention to make the property available for use to assist the homeless, (2) its intention to declare the property excess to the agency's needs, or (3) a statement of the reasons that the property cannot be declared excess or made available for use as facilities to assist the homeless.

Properties listed as suitable/available will be available exclusively for homeless use for a period of 60 days from the date of this Notice. Homeless assistance providers interested in any such property should send a written expression of interest to HHS, addressed to Brian Rooney, Division of Property Management, Program Support Center, HHS, room 5B–41, 5600 Fishers Lane, Rockville, MD 20857; (301) 443–2265. (This is not a toll-free number.) HHS will mail to the interested provider an application packet, which will include instructions for completing the application. In order to maximize the opportunity to utilize a suitable property, providers should submit their written expressions of interest as soon as possible. For complete details concerning the processing of applications, the reader is encouraged to refer to the interim rule governing this program, 24 CFR part 581.

For properties listed as suitable/to be excess, that property may, if subsequently accepted as excess by GSA, be made available for use by the homeless in accordance with applicable law, subject to screening for other Federal use. At the appropriate time, HUD will publish the property in a Notice showing it as either suitable/available or suitable/unavailable.

For properties listed as suitable/unavailable, the landholding agency has decided that the property cannot be declared excess or made available for use to assist the homeless, and the property will not be available.

Properties listed as unsuitable will not be made available for any other purpose for 20 days from the date of this Notice. Homeless assistance providers interested in a review by HUD of the determination of unsuitability should call the toll free information at 1–800–

927–7588 for detailed instructions or write a letter to Mark Johnston at the address listed at the beginning of this Notice. Included in the request for review should be the property address (including zip code), the date of publication in the **Federal Register**, the landholding agency, and the property number.

For more information regarding particular properties identified in this Notice (*i.e.*, acreage, floor plan, existing sanitary facilities, exact street address), providers should contact the appropriate landholding agencies at the following addresses: AIR FORCE: Ms. Barbara Jenkins, Air Force Real Estate Agency, (Area-MI), Bolling Air Force Base, 112 Luke Avenue, Suite 104, Building 5683, Washington, DC 20332–8020; (202) 767–4184; GSA: Mr. Brian K. Polly, Assistant Commissioner, General Services Administration, Office of Property Disposal, 18th and F Streets, NW, Washington, DC 20405; (202) 501–2059; COE: Ms. Shirley Middleswarth, Army Corps of Engineers, Management & Disposal Division, Pulaski Building, Room 4224, 20 Massachusetts Avenue, NW, Washington, DC 20314–1000; (202) 761–1000; (These are not toll-free numbers).

Dated: February 25, 1999.

Fred Karnas, Jr.,

Deputy Assistant Secretary for Economic Development.

TITLE V, FEDERAL SURPLUS PROPERTY PROGRAM FEDERAL REGISTER REPORT FOR 3/5/99

Suitable/Available Properties

Buildings (by State)

California

Bldg. 604
Point Arena Air Force Station
Co: Mendocino CA 95468–5000
Landholding Agency: Air Force
Property Number: 18199010237
Status: Unutilized
Comment: 1232 sq. ft.; stucco-wood frame; most recent use—housing.

Bldg. 605
Point Arena Air Force Station
Co: Mendocino CA 95468–5000
Landholding Agency: Air Force
Property Number: 18199010238
Status: Unutilized
Comment: 1232 sq. ft.; stucco-wood frame; most recent use—housing.

Bldg. 611
Point Arena Air Force Station
Co: Mendocino CA 95468–5000
Landholding Agency: Air Force
Property Number: 18199010240
Status: Unutilized
Comment: 1232 sq. ft.; stucco-wood frame; most recent use—housing.

Bldg. 612
Point Arena Air Force Station
Co: Mendocino CA 95468–5000
Landholding Agency: Air Force
Property Number: 18199010239
Status: Unutilized
Comment: 1232 sq. ft.; stucco-wood frame; most recent use—housing.

Bldg. 613
Point Arena Air Force Station
Co: Mendocino CA 95468–5000
Landholding Agency: Air Force
Property Number: 18199010241
Status: Unutilized
Comment: 1232 sq. ft.; stucco-wood frame; most recent use—housing.

Bldg. 614
Point Arena Air Force Station
Co: Mendocino CA 95468–5000
Landholding Agency: Air Force
Property Number: 18199010242
Status: Unutilized
Comment: 1232 sq. ft.; stucco-wood frame; most recent use—housing.

Bldg. 615
Point Arena Air Force Station
Co: Mendocino CA 95468–5000
Landholding Agency: Air Force
Property Number: 18199010243
Status: Unutilized
Comment: 1232 sq. ft.; stucco-wood frame; most recent use—housing.

Bldg. 616
Point Arena Air Force Station
Co: Mendocino CA 95468–5000
Landholding Agency: Air Force
Property Number: 18199010244
Status: Unutilized
Comment: 1232 sq. ft.; stucco-wood frame; most recent use—housing.

Bldg. 617
Point Arena Air Force Station
Co: Mendocino CA 95468–5000
Landholding Agency: Air Force
Property Number: 18199010245
Status: Unutilized
Comment: 1232 sq. ft.; stucco-wood frame; most recent use—housing.

Bldg. 618
Point Arena Air Force Station
Co: Mendorino CA 95468–5000
Landholding Agency: Air Force
Property Number: 18199010246
Status: Unutilized
Comment: 1232 sq. ft.; stucco-wood frame; most recent use—housing; needs rehab.

Natl Weather Svc Station
Blue Canyon Airport
Emigrant Gap CA 95715–
Landholding Agency: GSA
Property Number: 54199840007
Status: Surplus
Comment: 3140 sq. ft., presence of asbestos, most recent use—ofc/residential/storage, land agreements w/U.S. Forest Service exist, special use permit
GSA Number: 9–C–CA–1521.

Delaware

Unaccompanied Pers. Housing
800 Inlet Road
Rehoboth Beach Co: Sussex DE 19971–2698
Landholding Agency: GSA
Property Number: 54199840009
Status: Excess
Comment: 3600 sq. ft., 2-story, termite damage, most recent use—housing, off-site use only
GSA Number: 4–U–DE–462.

Georgia

Federal Building
109 N. Main Street
Lafayette Co: Walker GA 30728–
Landholding Agency: GSA
Property Number: 54199910014
Status: Excess
Comment: approx. 4761 sq. ft., does not meet ADA requirements for accessibility, easements/reservations restrictions, historic protective covenants
GSA Number: 4–G–GA–858.

Idaho

Bldg. 516
Mountain Home Air Force Base
Mountain Home Co: Elmore ID 86348–
Landholding Agency: Air Force
Property Number: 18199520004
Status: Excess
Comment: 4928 sq. ft., 1 story wood frame, presence of lead paint and asbestos, most recent use—offices.

Bldg. 2201
Mountain Home Air Force Base
Mountain Home Co: Elmore ID 83648–
Landholding Agency: Air Force
Property Number: 18199520005
Status: Underutilized
Comment: 6804 sq. ft., 1 story wood frame, most recent use—temporary garage for base fire dept. vehicles, presence of lead paint and asbestos, shingles.

Indiana

Vincennes Federal Building
501 Busseron St.
Vincennes Co: Knox IN 47591–
Landholding Agency: GSA
Property Number: 54199820015
Status: Excess
Comment: 22,000 sq. ft., presence of asbestos, property is historically significant, most recent use—office bldg.
GSA Number: 1–G–IN–592.

Iowa

Tract 141
Melos, Stanley, Camp Dodge
Johnston Co: Polk IA 50131–
Landholding Agency: COE
Property Number: 31199610005
Status: Excess
Comment: 1104 sq. ft., most recent use—storage, needs rehab, possible asbestos, off-site use only.

Kansas

Bldg. 2703
Forbes Field, Topeka Air Industrial Park
Topeka Co: Shawnee KS
Landholding Agency: GSA
Property Number: 54199840014
Status: Excess
Comment: 192,985 sq. ft., needs repair, most recent use—storage/warehouse
GSA Number: 7–D–KS–422–111.

Kentucky

Green River Lock & Dam #3
Rochester Co: Butler KY 42273–
Location: SR 70 west from Morgantown, KY., approximately 7 miles to site.
Landholding Agency: COE
Property Number: 31199010022
Status: Unutilized

Comment: 980 sq. ft.; 2 story wood frame; two story residence; potential utilities; needs major rehab.

Kentucky River Lock and Dam 3
Pleasureville Co: Henry KY 40057–
Location: SR 421 North from Frankfort, KY. to highway 561, right on 561 approximately 3 miles to site.
Landholding Agency: COE
Property Number: 31199010060
Status: Unutilized
Comment: 897 sq. ft.; 2 story wood frame; structural deficiencies.

Bldg. 1
Kentucky River Lock and Dam
Carrolton Co: Carroll KY 41008–
Location: Take I–71 to Carrolton, KY exit, go east on SR #227 to Highway 320, then left for about 1.5 miles to site.
Landholding Agency: COE
Property Number: 31199011628
Status: Unutilized
Comment: 1,530 sq. ft.; 2 story wood frame house; subject to periodic flooding; needs rehab.

Bldg. 2
Kentucky River Lock and Dam
Carrolton Co: Carroll KY 41008–
Location: Take I–71 to Carrolton, KY exit, go east on SR #227 to highway 320, then left for about 1.5 miles to site.
Landholding Agency: COE
Property Number: 31199011629
Status: Unutilized
Comment: 1,530 sq. ft.; 2 story wood frame house; subject to periodic flooding; needs rehab.

Utility Bldg., Nolin River Lake
Moutardier Recreation Site
Co: Edmonson KY
Landholding Agency: COE
Property Number: 31199320002
Status: Unutilized
Comment: 541 sq. ft., concrete block, off-site use only.

Maryland

Waldorf Housing
Country Lane and Spruce Street
Waldorf Co: Charles MD
Landholding Agency: COE
Property Number: 54199840012
Status: Excess
Comment: 12 unit townhouse complex—5 two bedroom, 1 bath; 5 three bedroom, 1 bath; 2 three bedroom, 2 bath; need rehab
GSA Number: 4–N–MD–0546.

Michigan

Parcel 1
Old Lifeboat Station
East Tawas Co: Iosco MI
Landholding Agency: GSA
Property Number: 54199730011
Status: Excess
Comment: 2,062 sq. ft. station bldg., garage, boathouse, oilhouse, possible asbestos/lead paint, eligible for listing on National Register of Historic Places
GSA Number: 1–UU–MI–500.

Missouri

Riverlands Ofc. Bldg.
Melvin Price Locks & Dam
Access Road
West Alton Co: St. Charles MO 63386–
Landholding Agency: COE
Property Number: 31199730001
Status: Excess
Comment: 5,000 sq. ft., steel, most recent use—office, flood damaged, off-site use only.

Project Residence
Long Branch Lake–
30186 Visitor Center Road
Macon MO 63552–
Landholding Agency: COE
Property Number: 31199830001
Status: Excess
Comment: 1,440 sq. ft., off-site use only.

Proj. Residence #1
Stockton Lake
Stockton Co: Cedar MO 65785–
Landholding Agency: COE
Property Number: 31199840001
Status: Excess
Comment: 1260 sq. ft. w/attached garage, most recent use—residence, off-site use only.

Proj. Residence #2
Stockton Lake
Stockton Co: Cedar MO 65785–
Landholding Agency: COE
Property Number: 31199840002
Status: Excess
Comment: 1260 sq. ft. w/attached garage, most recent use—residence, off-site use only.

Montana

Bldg. 112
Forsyth Training Site
Co: Rosebud MT
Landholding Agency: Air Force
Property Number: 18199610002
Status: Unutilized
Comment: 586 sq. ft., most recent use—cold storage.

Nebraska

Bldg. 20
Offutt Commuications Annex 4
Silver Creek Co: Nance NE 68663–
Landholding Agency: Air Force
Property Number: 18199610004
Status: Unutilized
Comment: 4714 sq. ft., most recent use—dormitory needs major repair.

New Jersey

ESMT Manasquan
124 Ocean Ave.
Manasquan Co: Monmouth NJ
Landholding Agency: GSA
Property Number: 54199730025
Status: Excess
Comment: main bldg. (5714 sq. ft.), paint locker (96 sq. ft.), garage (3880 sq. ft.), need repairs, presence of asbestos/lead paint, Coast Guard easement.
GSA Number: 1–U–NJ–0632.

New York

''Terry Hill''
County Road 51
Manorville NY
Landholding Agency: GSA
Property Number: 54199830008
Status: Surplus
Comment: 2 block structures, 780/272 sq. ft., no sanitary facilities, most recent use—storage/comm. facility, w/6.19 acres in fee and 4.99 acre easement, remote area
GSA Number: 1–D–NY–864.

Binghampton Depot
Nolans Road
Binghampton Co: NY 00000–
Landholding Agency: GSA
Property Number: 54199910015
Status: Excess
Comment: 45,977 sq. ft., needs repair, presence of asbestos, most recent use—office
GSA Number: 1–G–NY–760A.

North Carolina

Coinjock Station
Canal Road
Coinjock Co: Currituck NC 27293–
Landholding Agency: GSA
Property Number: 54199840010
Status: Excess
Comment: 4 bldgs., most recent use—storage/office
GSA Number: 4–U–NCV–734.

Ohio

Barker Historic House
Willow Island Locks and Dam
Newport Co: Washington OH 45768–9801
Location: Located at lock site, downstream of lock and dam structure
Landholding Agency: COE
Property Number: 31199120018
Status: Unutilized
Comment: 1600 sq. ft. bldg. with 1/2 acre of land, 2 story brick frame, needs rehab, on Natl Register of Historic Places, no utilities, off-site use only.

Dwelling No. 2
Delaware Lake, Highway 23 North
Delaware OH 43015–
Landholding Agency: COE
Property Number: 31199810005
Status: Excess
Comment: 2-story brick w/basement, most recent use—residential, presence of asbestos/lead paint, off-site use only.

Lorain Housing
238–240 Augusta Ave.
Lorain OH 44051–
Landholding Agency: GSA
Property Number: 54199840006
Status: Excess
Comment: 3000 sq. ft. duplex, 2-story, good condition, possible lead based paint, existing easements
GSA Number: 1–U–OH–814.

Oklahoma

Water Treatment Plant
Belle Starr, Eufaula Lake
Eufaula Co: McIntosh OK 74432–
Landholding Agency: COE
Property Number: 31199630001
Status: Excess
Comment: 16′x16′, metal, off-site use only.

Water Treatment Plant
Gentry Creek, Eufaula Lake
Eufaula Co: McIntosh OK 74432–
Landholding Agency: COE
Property Number: 31199630002
Status: Excess
Comment: 12′x16′, metal, off-site use only.

NIPER
Natl. Inst. for Petroleum &
Energy Research
220 Virginia Ave.
Bartlesville OK 74003–

Landholding Agency: GSA
Property Number: 54199840011
Status: Surplus
Comment: 25 structures on 15.66 acres of land, most recent use—offices to labs, environmental issues
GSA Number: 7–B–OK–563.

Pennsylvania

Mahoning Creek Reservoir
New Bethlehem Co: Armstrong PA 16242–
Landholding Agency: COE
Property Number: 31199210008
Status: Unutilized
Comment: 1015 sq. ft., 2 story brick residence, off-site use only.

One Unit/Residence
Conemaugh River Lake, RD #1,
Box 702
Saltburg Co: Indiana PA 15681–
Landholding Agency: COE
Property Number: 31199430011
Status: Unutilized
Comment: 2642 sq. ft., 1-story, 1-unit of duplex, fair condition, access restrictions.

Dwelling
Lock & Dam 6, Allegheny
River, 1260 River Rd.
Freeport Co: Armstrong PA 16229–2023
Landholding Agency: COE
Property Number: 31199620008
Status: Unutilized
Comment: 2652 sq. ft., 3-story brick house, in close proximity to Lock and Dam, available for interim use for nonresidential purposes.

Govt. Dwelling
Youghiogheny River Lake
Confluence Co: Fayette PA 15424–9103
Landholding Agency: COE
Property Number: 31199640002
Status: Unutilized
Comment: 1421 sq. ft., 2-story brick w/ basement, most recent use—residential.

Dwelling
Lock & Dam 4, Allegheny River
Natrona Co: Allegheny PA 15065–2609
Landholding Agency: COE
Property Number: 31199710009
Status: Unutilized
Comment: 1664 sq. ft., 2-story brick residence, needs repair, off-site use only.

Dwelling #1
Crooked Creek Lake
Ford City Co: Armstrong PA 16226–8815
Landholding Agency: COE
Property Number: 31199740002
Status: Excess
Comment: 2030 sq. ft., most recent use—residential, good condition, off-site use only.

Dwelling #2
Crooked Creek Lake
Ford City Co: Armstrong PA 16226–8815
Landholding Agency: COE
Property Number: 31199740003
Status: Excess
Comment: 3045 sq. ft., most recent use—residential, good condition, off-site use only.

Dwelling #3
Crooked Creek Lake
Ford City Co: Armstrong PA 16226–8815
Landholding Agency: COE
Property Number: 31199740004
Status: Excess
Comment: 1847 sq. ft., most recent use—office, good condition, off-site use only.

Govt Dwelling
East Branch Lake
Wilcox Co: Elk PA 15870–9709
Landholding Agency: COE
Property Number: 31199740005
Status: Underutilized
Comment: approx. 5299 sq. ft., 1-story, most recent use—residence, off-site use only.

Dwelling #1
Loyalhanna Lake
Saltsburg Co: Westmoreland PA 15681–9302
Landholding Agency: COE
Property Number: 31199740006
Status: Excess
Comment: 1996 sq. ft., most recent use—residential, good condition, off-site use only.

Dwelling #2
Loyalhanna Lake
Saltsburg Co: Westmoreland PA 15681–9302
Landholding Agency: COE
Property Number: 31199740007
Status: Excess
Comment: 1996 sq. ft., most recent use—residential, good condition, off-site use only.

Dwelling #1
Woodcock Creek Lake
Saegertown Co: Crawford PA 16433–0629
Landholding Agency: COE
Property Number: 31199740008
Status: Excess
Comment: 2106 sq. ft., most recent use—residential, good condition, off-site use only.

Dwelling #2
Lock & Dam 6, 1260 River Road
Freeport Co: Armstrong PA 16229–2023
Landholding Agency: COE
Property Number: 31199740009
Status: Excess
Comment: 2652 sq. ft., most recent use—residential, good condition, off-site use ony.

Dwelling #2
Youghiogheny River Lake
Confluence Co: Fayette PA 15424–9103
Landholding Agency: COE
Property Number: 31199830003
Status: Excess
Comment: 1421 sq. ft., 2-story + basement, most recent use—residential.

South Dakota

West Communications Annex
Ellsworth Air Force Base
Ellsworth AFB Co: Meade SD 57706–
Landholding Agency: Air Force
Property Number: 18199340051
Status: Unutilized
Comment: 2 bldgs. on 2.37 acres, remote area, lacks infrastructure, road hazardous during winter storms, most recent use—industrial storage.

Tennessee

Cheatham Lock & Dam
Tract D, Lock Road
Nashville Co: Davidson TN 37207–
Landholding Agency: COE
Property Number: 31199520003
Status: Unutilized
Comment: 1100 sq. ft. w/storage bldgs on 7 acres, needs major rehab, contamination issues, 1 acre in fldwy, off-site use only modif. to struct. subj. to approval of St. Hist. Presv. Ofc.

Texas

Soil Testing Lab
4815 Cass St.
Dallas TX 75235–
Landholding Agency: GSA
Property Number: 54199840008
Status: Excess
Comment: 40,000 sq. ft., most recent use—laboratory
GSA Number: 7–D–TX–1059.

Dempsey Strategic Storage Cent
1348 Palo Pinto Hwy
Palo Pinto Co: TX 76484–
Landholding Agency: GSA
Property Number: 54199910012
Status: Surplus
Comment: 51,680 sq. ft., metal bldg w/150 acres of pavement, most recent use—classrooms, presence of asbestos/lead paint
GSA Number: 7–Z–TX–1060.

Virginia

Peters Ridge Site
Gathright Dam
Covington VA
Landholding Agency: COE
Property Number: 31199430013
Status: Excess
Comment: 64 sq. ft., metal bldg.

Metal Bldg.
John H. Kerr Dam & Reservoir
Co: Boydton VA
Landholding Agency: COE
Property Number: 31199620009
Status: Excess
Comment: 800 sq. ft., most recent use—storage, off-site use only.

Washington

Moses Lake U.S. Army Rsv Ctr
Grant County Airport
Moses Lake Co: Grant WA 98837–
Landholding Agency: GSA
Property Number: 21199630118
Status: Surplus
Comment: 4499 sq. ft./2.86 acres, most recent use—admin.
GSA Number: 9–D–WA–1141.

West Virginia

Dwelling 1
Summersville Lake
Summersville Co: Nicholas WV 26651–9802
Landholding Agency: COE
Property Number: 31199810003
Status: Excess
Comment: 1200 sq. ft., presence of asbestos/lead paint, most recent use—residential, off-site use only.

Dwelling 2
Sutton Lake
Sutton Co: Braxton WV 26651–9802
Landholding Agency: COE
Property Number: 31199810004
Status: Excess
Comment: 1100 sq. ft., most recent use—residential, off-site use only.

Wisconsin

Former Lockmaster's Dwelling
Cedar Locks
4527 East Wisconsin Road
Appelton Co: Outagamie WI 54911–

Landholding Agency: COE
Property Number: 31199011524
Status: Unutilized
Comment: 1224 sq. ft.; 2 story brick/wood frame residence; needs rehab; secured area with alternate access.

Former Lockmaster's Dwelling
Appelton 4th Lock
905 South Lowe Street
Appelton Co: Outagamie WI 54911–
Landholding Agency: COE
Property Number: 31199011525
Status: Unutilized
Comment: 908 sq. ft.; 2 story wood frame residence; needs rehab.

Former Lockmaster's Dwelling
Kaukauna 1st Lock
301 Canal Street
Kaukauna Co: Outagamie WI 54131–
Landholding Agency: COE
Property Number: 31199011527
Status: Unutilized
Comment: 1290 sq. ft.; 2 story wood frame residence; needs rehab; secured area with alternate access.

Former Lockmaster's Dwelling
Appleton 1st Lock
905 South Oneida Street
Appleton Co: Outagamie WI 54911–
Landholding Agency: COE
Property Number: 31199011531
Status: Unutilized
Comment: 1300 sq. ft.; potential utilities; 2 story wood frame residence; needs rehab; secured area with alternate access.

Former Lockmaster's Dwelling
Rapid Croche Lock
Lock Road
Wrightstown Co: Outagamie WI 54180–
Landholding Agency: COE
Location: 3 miles southwest of intersection State Highway 96 and Canal Road.
Property Number: 31199011533
Status: Unutilized
Comment: 1952 sq. ft.; 2 story wood frame residence; potential utilities; needs rehab.

Former Lockmaster's Dwelling
Little KauKauna Lock
Little KauKauna
Lawrence Co: Brown WI 54130–
Location: 2 mile southeasterly from intersection of Lost Dauphin Road (County Trunk Highway ''D'') and River Street.
Landholding Agency: COE
Property Number: 31199011535
Status: Unutilized
Comment: 1224 sq. ft.; 2 story brick/wood frame residence; needs rehab.

Former Lockmaster's Dwelling
Little Chute, 2nd Lock
214 Mill Street
Little Chute Co: Outagamie WI 54140–
Landholding Agency: COE
Property Number: 31199011536
Status: Unutilized
Comment: 1224 sq. ft.; 2 story brick/wood frame residence; potential utilities; needs rehab; secured area with alternate access.

Natl Weather Svc Forecast Ofc.
3009 W. Fairview Rd.
Neenah Co: Winnebago WI 54956–
Landholding Agency: GSA
Property Number: 54199820004
Status: Excess
Comment: 1755 sq. ft., good condition, presence of asbestos/lead paint, most recent use—office
GSA Number 1–C–WI–594.

Wausau Federal Building
317 First Street
Wausau Co: Marathon WI 54401–
Landholding Agency: GSA
Property Number: 54199820016
Status: Excess
Comment: 30,500 sq. ft., presence of asbestos, eligible for listing on the Natl Register of Historic Places, most recent use—office
GSA Number: 1–G–WI–593.

Naval Reserve Center
215 South Eagle Street
Oshkosh Co: Winnebago WI 54903–
Landholding Agency: GSA
Property Number: 54199830002
Status: Excess
Comment: 16,260 sq. ft., excellent condition, presence of asbestos/lead paint, most recent use—office
GSA Number: 1–N–WI–596.

Land (by State)

Arkansas

Parcel 01
DeGray Lake
Section 12
Arkadelphia Co: Clark AR 71923–9361
Landholding Agency: COE
Property Number: 31199010071
Status: Unutilized
Comment: 77.6 acres.

Parcel 02
DeGray Lake
Section 13
Arkadelphia Co: Clark AR 71923–9361
Landholding Agency: COE
Property Number: 31199010072
Status: Unutilized
Comment: 198.5 acres.

Parcel 03
DeGray Lake
Section 18
Arkadelphia Co: Clark AR 71923–9361
Landholding Agency: COE
Property Number: 31199010073
Status: Unutilized
Comment: 50.46 acres.

Parcel 04
DeGray Lake
Section 24, 25, 30 and 31
Arkadelphia Co: Clark AR 71923–9361
Landholding Agency: COE
Property Number: 31199010074
Status: Unutilized
Comment: 236.37 acres.

Parcel 05
DeGray Lake
Section 16
Arkadelphia Co: Clark AR 71923–9361
Landholding Agency: COE
Property Number: 31199010075
Status: Unutilized
Comment: 187.30 acres.

Parcel 06
DeGray Lake
Section 13
Arkadelphia Co: Clark AR 71923–9361
Landholding Agency: COE
Property Number: 31199010076
Status: Unutilized
Comment: 13.0 acres.

Parcel 07
DeGray Lake
Section 34
Arkadelphia Co: Hot Spring AR 71923–9361
Landholding Agency: COE
Property Number: 31199010077
Status: Unutilized
Comment: 0.27 acres.

Parcel 08
DeGray Lake
Section 13
Arkadelphia Co: Clark AR 71923–9361
Landholding Agency: COE
Property Number: 31199010078
Status: Unutilized
Comment: 14.6 acres.

Parcel 09
DeGray Lake
Section 12
Arkadelphia Co: Hot Spring AR 71923–9361
Landholding Agency: COE
Property Number: 31199010079
Status: Unutilized
Comment: 6.60 acres.

Parcel 10
DeGray Lake
Section 12
Arkadelphia Co: Hot Spring AR 71923–9361
Landholding Agency: COE
Property Number: 31199010080
Status: Unutilized
Comment: 4.5 acres.

Parcel 11
DeGray Lake
Section 19
Arkadelphia Co: Hot Spring AR 71923–9361
Landholding Agency: COE
Property Number: 31199010081
Status: Unutilized
Comment: 19.50 acres.

Lake Greeson
Sections 7, 8, and 18
Murfreesboro Co: Pike AR 71958–9720
Landholding Agency: COE
Property Number: 31199010083
Status: Unutilized
Comment: 46 acres.

California

Lake Sonoma, Tract 1607
Geyserville CA
Landholding Agency: GSA
Property Number: 54199740020
Status: Excess
Comment: 139 acres, most recent use—recreation
GSA Number: 9–D–CA–1504.

Hawaii

Former S. Point AF Station
Island of HI Co: Naalehu HI 96772–
Landholding Agency: GSA
Property Number: 54199830001
Status: Excess
Comment: Parcel # = 5.739 acres w/2 deteriorated bldgs., Parcel # 2 = 0.70 acres, properties are extremely remote
GSA Number: 9–D–HI–443–B.

Kansas

Parcel 1
El Dorado Lake
Sections 13, 24, and 18
(See County) Co: Butler KS
Landholding Agency: COE

Property Number: 31199010064
Status: Unutilized
Comment: 61 acres; most recent use—recreation.

Kentucky

Tract 2625
Barkley Lake, Kentucky, and Tennessee
Cadiz Co: Trigg KY 42211–
Location: Adjoining the village of Rockcastle.
Landholding Agency: COE
Property Number: 31199010025
Status: Excess
Comment: 2.57 acres; rolling and wooded.

Tract 2709–10 and 2710–2
Barkley Lake, Kentucky and Tennessee
Cadiz Co: Trigg KY 42211–
Location: 2½ miles in a southerly direction from the village of Rockcastle.
Landholding Agency: COE
Property Number: 31199010027
Status: Excess
Comment: 2.00 acres; steep and wooded.

Tract 2708–1 and 2709–1
Barkley Lake, Kentucky and Tennessee
Cadiz Co: Trigg KY 42211–
Location: 2½ miles in a southerly direction from the village of Rockcastle.
Landholding Agency: COE
Property Number: 31199010027
Status: Excess
Comment: 3.59 acres; rolling and wooded; no utilities.

Tract 2800
Barkley Lake, Kentucky and Tennessee
Cadiz Co: Trigg KY 42211–
Location: 4½ miles in a southerly direction from the village of Rockcastle.
Landholding Agency: COE
Property Number: 31199010028
Status: Excess
Comment: 5.44 acres; steep and wooded.

Tract 2915
Barkley Lake, Kentucky and Tennessee
Cadiz Co: Trigg KY 42211–
Location: 6½ miles west of Cadiz.
Landholding Agency: COE
Property Number: 31199010029
Status: Excess
Comment: 5.76 acres; steep and wooded; no utilizes.

Tract 2702
Barkley Lake, Kentucky and Tennessee
Cadiz Co: Trigg KY 42211–
Location: 1 mile in a southerly direction from the village of Rockcastle.
Landholding Agency: COE
Property Number: 31199010031
Status: Excess
Comment: 4.90 acres; wooded; no utilities.

Tract 4318
Barkley Lake, Kentucky and Tennessee
Cadiz Co: Trigg KY 42211–
Location: Trigg Co. adjoining the city of Canton, KY. on the waters of Hopson Creek.
Landholding Agency: COE
Property Number: 31199010032
Status: Excess
Comment: 8.24 acres; steep and wooded.

Tract 4502
Barkley Lake, Kentucky and Tennessee
Cadiz Co: Trigg KY 42212–
Location: 3½ miles in a southerly direction from Canton, KY.
Landholding Agency: COE
Property Number: 31199010033
Status: Excess
Comment: 4.26 acres; steep and wooded.

Tract 4611
Barkley Lake, Kentucky and Tennessee
Canton Co: Trigg KY 42212–
Location: 5 miles south of Canton, KY.
Landholding Agency: COE
Property Number: 31199010034
Status: Excess
Comment: 10.51 acres; steep and wooded; no utilities.

Tract 4619
Barkley Lake, Kentucky and Tennessee
Canton Co: Trigg KY 42212–
Location: 4½ miles south from Canton, KY.
Landholding Agency: COE
Property Number: 31199010035
Status: Excess
Comment: 2.02 acres; steep and wooded; no utilities.

Tract 4817
Barkley Lake, Kentucky and Tennessee
Canton Co: Trigg KY 42212–
Location: 6½ miles south of Canton, KY.
Landholding Agency: COE
Property Number: 31199010036
Status: Excess
Comment: 1.75 acres; wooded.

Tract 1217
Barkley Lake, Kentucky and Tennessee
Eddyville Co: Lyon KY 42030–
Location: On the north side of the Illinois Central Railroad.
Landholding Agency: COE
Property Number: 31199010042
Status: Excess
Comment: 5.80 acres; steep and wooded.

Tract 1906
Barkley Lake, Kentucky and Tennessee
Eddyville Co: Lyon KY 42030–
Location: Approximately 4 miles east of Eddyville, KY.
Landholding Agency: COE
Property Number: 31199010044
Status: Excess
Comment: 25.86 acres; rolling steep and partially wooded; no utilities.

Tract 1907
Barkley Lake, Kentucky and Tennessee
Eddyville Co: Lyon KY 42030–
Location: On the waters of Pilfen Creek, 4 miles east of Eddyville, KY.
Landholding Agency: COE
Property Number: 31199010045
Status: Excess
Comment: 8.71 acres; rolling steep and wooded; no utilities.

Tract 2001 #1
Barkley Lake, Kentucky and Tennessee
Eddyville Co: Lyon KY 42030–
Location: Approximately 4½ miles east of Eddyville, KY.
Landholding Agency: COE
Property Number: 31199010046
Status: Excess
Comment: 47.42 acres; steep and wooded; no utilities.

Tract 2001 #2
Barkley Lake, Kentucky and Tennessee
Eddyville Co: Lyon KY 42030–
Location: Approximately 4½ miles east of Eddyville, KY.
Landholding Agency: COE
Property Number: 31199010047
Status: Excess
Comment: 8.64 acres; steep and wooded; no utilities.

Tract 2005
Barkley Lake, Kentucky and Tennessee
Eddyville Co: Lyon KY 42030–
Location: Approximately 5½ miles east of Eddyville, KY.
Landholding Agency: COE
Property Number: 31199010048
Status: Excess
Comment: 4.62 acres; steep and wooded; no utilities.

Tract 2307
Barkley Lake, Kentucky and Tennessee
Eddyville Co: Lyon KY 42030–
Location: Approximately 7½ miles southeasterly of Eddyville, KY.
Landholding Agency: COE
Property Number: 31199010049
Status: Excess
Comment: 11.43 acres; steep rolling and wooded; no utilities.

Tract 2403
Barkley Lake, Kentucky and Tennessee
Eddyville Co: Lyon KY 42030–
Location: 7 miles southeasterly of Eddyville, KY.
Landholding Agency: COE
Property Number: 31199010050
Status: Excess
Comment: 1.56 acres; steep and wooded; no utilities.

Tract 2504
Barkley Lake, Kentucky and Tennessee
Eddyville Co: Lyon KY 42030–
Location: 9 miles southeasterly of Eddyville, KY.
Landholding Agency: COE
Property Number: 31199010051
Status: Excess
Comment: 24.46 acres; steep and wooded; no utilities.

Tract 214
Barkley Lake, Kentucky and Tennessee
Grand Rivers Co: Lyon KY 42045–
Location: South of the Illinois Central Railroad, 1 mile east of the Cumberland River.
Landholding Agency: COE
Property Number: 31199010052
Status: Excess
Comment: 5.5 acres; wooded; no utilities.

Tract 215
Barkley Lake, Kentucky and Tennessee
Grand Rivers Co: Lyon KY 42045–
Location: 5 miles southwest of Kuttawa
Landholding Agency: COE
Property Number: 31199010053
Status: Excess
Comment: 1.40 acres; wooded; no utilities.

Tract 241
Barkley Lake, Kentucky and Tennessee
Grand Rivers Co: Lyon KY 42045–
Location: Old Henson Ferry Road, 6 miles west of Kuttawa, KY.
Landholding Agency: COE
Property Number: 31199010054
Status: Excess
Comment: 1.26 acres; steep and wooded; no utilities.

Tracts 306, 311, 315 and 325

Barkley Lake, Kentucky and Tennessee
Grand Rivers Co: Lyon KY 42045–
Location: 2.5 miles southwest of Kuttawa, KY. on the waters of Cypress Creek.
Landholding Agency: COE
Property Number: 31199010055
Status: Excess
Comment: 38.77 acres; steep and wooded; no utilities.

Tracts 2305, 2306, and 2400–1
Barkley Lake, Kentucky and Tennessee
Eddyville Co: Lyon KY 42030–
Location: 6½ miles southeasterly of Eddyville, KY.
Landholding Agency: COE
Property Number: 31199010056
Status: Excess
Comment: 97.66 acres; steep rolling and wooded; no utilities.

Tract 500–2
Barkley Lake, Kentucky and Tennessee
Kuttawa Co: Lyon KY 42055–
Location: Situated on the waters of Poplar Creek, approximately 1 mile southwest of Kuttawa, KY.
Landholding Agency: COE
Property Number: 31199010057
Status: Excess
Comment: 3.58 acres; hillside ridgeland and wooded; no utilities.

Tracts 5203 and 5204
Barkley Lake, Kentucky and Tennessee
Linton Co: Trigg KY 42212–
Location: Village of Linton, KY state highway 1254.
Landholding Agency: COE
Property Number: 31199010058
Status: Excess
Comment: 0.93 acres; rolling, partially wooded; no utilities.

Tract 5240
Barkley Lake, Kentucky and Tennessee
Linton Co: Trigg KY 42212–
Location: 1 mile northwest of Linton, KY.
Landholding Agency: COE
Property Number: 31199010059
Status: Excess
Comment: 2.26 acres; steep and wooded; no utilities.

Tract 4628
Barkley Lake, Kentucky and Tennessee
Canton Co: Trigg KY 42212–
Location: 4½ miles south from Canton, KY.
Landholding Agency: COE
Property Number: 31199011621
Status: Excess
Comment: 3.71 acres; steep and wooded; subject to utility easements.

Tract 4619–B
Barkley Lake, Kentucky and Tennessee
Canton Co: Trigg KY 42212–
Location: 4½ miles south from Canton, KY.
Landholding Agency: COE
Property Number: 31199011622
Status: Excess
Comment: 1.73 acres; steep and wooded; subject to utility easements.

Tract 2403–B
Barkley Lake, Kentucky and Tennessee
Eddyville Co: Lyon KY 42038–
Location: 7 miles southeasterly from Eddyville, KY.
Landholding Agency: COE
Property Number: 31199011623
Status: Unutilized
Comment: 0.70 acres, wooded; subject to utility easements.

Tract 241–B
Barkley Lake, Kentucky and Tennessee
Grand Rivers Co: Lyon KY 42045–
Location: South of Old Henson Ferry Road, 6 miles west of Kuttawa, KY.
Landholding Agency: COE
Property Number: 31199011624
Status: Excess
Comment: 11.16 acres; steep and wooded; subject to utility easements.

Tracts 212 and 237
Barkley Lake, Kentucky and Tennessee
Grand Rivers Co: Lyon KY 42045–
Location: Old Henson Ferry Road, 6 miles west of Kuttawa, KY.
Landholding Agency: COE
Property Number: 31199011625
Status: Excess
Comment: 2.44 acres; steep and wooded; subject to utility easements.

Tract 215–B
Barkley Lake, Kentucky and Tennessee
Grand Rivers Co: Lyon KY 42045–
Location: 5 miles southwest of Kuttawa
Landholding Agency: COE
Property Number: 31199011626
Status: Excess
Comment: 1.00 acres; wooded; subject to utility easements.

Tract 233
Barkley Lake, Kentucky and Tennessee
Grand Rivers Co: Lyon KY 42045–
Location: 5 miles southwest of Kuttawa
Landholding Agency: COE
Property Number: 31199011627
Status: Excess
Comment: 1.00 acres; wooded; subject to utility easements.

Tract B—Markland Locks & Dam
Hwy 42, 3.5 miles downstream of Warsaw
Warsaw Co: Gallatin KY 41095–
Landholding Agency: COE
Property Number: 31199130002
Status: Unutilized
Comment: 10 acres, most recent use—recreational, possible periodic flooding.

Tract A—Markland Locks & Dam
Hwy 42, 3.5 miles downstream of Warsaw
Warsaw Co: Gallatin KY 41095–
Landholding Agency: COE
Property Number: 31199130003
Status: Unutilized
Comment: 8 acres, most recent use—recreational, possible periodic flooding.

Tract C—Markland Locks & Dam
Hwy 42, 3.5 miles downstream of Warsaw
Warsaw Co: Gallatin KY 41095–
Landholding Agency: COE
Property Number: 31199130005
Status: Unutilized
Comment: 4 acres, most recent use—recreational, possible periodic flooding.

Tract N–819
Dale Hollow Lake & Dam Project
Illwill Creek, Hwy 90
Hobart Co: Clinton KY 42601–
Landholding Agency: COE
Property Number: 31199140009
Status: Underutilized
Comment: 91 acres, most recent use—hunting, subject to existing easements.

Portion of Lock & Dam No. 1
Kentucky River
Carrolton Co: Carroll KY 41008–0305
Landholding Agency: COE
Property Number: 31199320003
Status: Unutilized
Comment: approx. 3.5 acres, (sloping), access monitored.

Portion of Lock & Dam No. 2
Kentucky River
Lockport Co: Henry KY 40036–9999
Landholding Agency: COE
Property Number: 31199320004
Status: Underutilized
Comment: approx. 13.14 acres, (sloping), access monitored.

Louisiana

Wallace Lake Dam and Reservoir
Shreveport Co: Caddo LA 71103–
Landholding Agency: COE
Property Number: 31199011009
Status: Unutilized
Comment: 11 acres; wildlife/forestry; no utilities.

Bayou Bodcau Dam and Reservoir
Haughton Co: Caddo LA 71037–9707
Location: 35 miles Northeast of Shreveport, La.
Landholding Agency: COE
Property Number: 31199011010
Status: Unutilized
Comment: 203 acres, wildlife/forestry; no utilities.

Maine

Irish Ridge NEXRAD Site
Loring AFB
Fort Fairfield Co: Aroostook ME 04742–
Landholding Agency: Air Force
Property Number: 18199640017
Status: Unutilized
Comment: 3.491 acres in fee simple.

Massachusetts

.07 acre
Westover Air Reserve Base
Off Rte 33
Chicopee Co: Hampden MA 01022–
Landholding Agency: Air Force
Property Number: 18199840007
Status: Excess
Comment: land, no utilities.

Minnesota

Parcel D
Pine River
Cross Lake Co: Crow Wing MN 56442–
Location: 3 miles from city of Cross Lake, between highways 6 and 371.
Landholding Agency: COE
Property Number: 31199011038
Status: Excess
Comment: 17 acres; no utilities.

Tract 92
Sandy Lake
McGregor Co: Aitkins MN 55760–
Location: 4 miles west of highway 65, 15 miles from city of McGregor.
Landholding Agency: COE
Property Number: 31199011040
Status: Excess
Comment: 4 acres; no utilities.

Tract 98
Leech Lake
Benedict Co: Hubbard MN 56641–
Location: 1 mile from city of Federal Dam, Mn.

Landholding Agency: COE
Property Number: 31199011041
Status: Excess
Comment: 7.3 acres; no utilities.

Mississippi

Parcel 7
Grenada Lake
Sections 22, 23, T24N
Grenada Co: Yalobusha MS 38901–0903
Landholding Agency: COE
Property Number: 31199011019
Status: Underutilized
Comment: 100 acres; no utilities; intermittently used under lease—expires 1994.

Parcel 8
Grenada Lake
Section 20, T24N
Grenada Co: Yalobusha MS 38901–0903
Landholding Agency: COE
Property Number: 31199011020
Status: Underutilized
Comment: 30 acres; no utilities; intermittently used under lease—expires 1994.

Parcel 9
Grenada Lake
Section 20, T24N, R7E
Grenada Co: Yalobusha MS 38901–0903
Landholding Agency: COE
Property Number: 31199011021
Status: Underutilized
Comment: 23 acres; no utilities; intermittently used under lease—expires 1994.

Parcel 10
Grenada Lake
Sections 16, 17, 18, T24N, R8E
Grenada Co: Calhoun MS 38901–0903
Landholding Agency: COE
Property Number: 31199011022
Status: Underutilized
Comment: 490 acres; no utilities; intermittently used under lease—expires 1994.

Parcel 2
Grenada Lake
Section 20 and T23N, R5E
Grenada Co: Grenada MS 38901–0903
Landholding Agency: COE
Property Number: 31199011023
Status: Underutilized
Comment: 60 acres; no utilities; most recent use—wildlife and forestry management.

Parcel 3
Grenada Lake
Section 4, T23N, R5E
Grenada Co: Yalobusha MS 38901–0903
Landholding Agency: COE
Property Number: 31199011024
Status: Underutilized
Comment: 120 acres; no utilities; most recent use—wildlife and forestry management; (13.5 acres/agriculture lease).

Parcel 4
Grenada Lake
Section 2 and 3. T23N, R5E
Grenada Co: Yalobusha MS 38901–0903
Landholding Agency: COE
Property Number: 31199011025
Status: Underutilized
Comment: 60 acres; no utilities; most recent use—wildlife and forestry management.

Parcel 5
Grenada Lake
Section 7, T24N, R6E
Grenada Co: Yalobusha MS 38901–0903
Landholding Agency: COE
Property Number: 31199011026
Status: Underutilized
Comment: 20 acres; no utilities; most recent use—wildlife and forestry management; (14 acres/agriculture lease).

Parcel 6
Grenada Lake
Section 9, T24N, R6E
Grenada Co: Yalobusha MS 38903–0903
Landholding Agency: COE
Property Number: 31199011027
Status: Underutilized
Comment: 80 acres; no utilities; most recent use—wildlife and forestry management.

Parcel 11
Grenada Lake
Section 20, T24N, R8E
Grenada Co: Yalobusha MS 38901–0903
Landholding Agency: COE
Property Number: 31199011028
Status: Underutilized
Comment: 30 acres; no utilities; most recent use—wildlife and forestry management.

Parcel 12
Grenada Lake
Section 25, T24N, R7E
Grenada Co: Yalobusha MS 38901–0903
Landholding Agency: COE
Property Number: 31199011029
Status: Underutilized
Comment: 20 acres; no utilities; most recent use—wildlife and forestry management.

Parcel 13
Grenada Lake
Section 34, T24N, R7E
Grenada Co: Yalobusha MS 38903–0903
Landholding Agency: COE
Property Number: 31199011030
Status: Underutilized
Comment: 35 acres; no utilities; most recent use—wildlife and forestry management; (11 acres/agriculture lease).

Parcel 14
Grenada Lake
Section 3, T23N, R6E
Grenada Co: Yalobusha MS 38901–0903
Landholding Agency: COE
Property Number: 31199011031
Status: Underutilized
Comment: 15 acres; no utilities; most recent use—wildlife and forestry management.

Parcel 15
Grenada Lake
Section 4, T24N, R6E
Grenada Co: Yalobusha MS 38901–0903
Landholding Agency: COE
Property Number: 31199011032
Status: Underutilized
Comment: 40 acres; no utilities; most recent use—wildlife and forestry management.

Parcel 16
Grenada Lake
Section 9, T23N, R6E
Grenada Co: Yalobusha MS 38901–0903
Landholding Agency: COE
Property Number: 31199011033
Status: Underutilized
Comment: 70 acres; no utilities; most recent use—wildlife and forestry management.

Parcel 17
Grenada Lake
Section 17, T23N, R7E
Grenada Co: Yalobusha MS 38901–0903
Landholding Agency: COE
Property Number: 31199011034
Status: Underutilized
Comment: 35 acres; no utilities; most recent use—wildlife and forestry management.

Parcel 18
Grenada Lake
Section 22, T23N, R7E
Grenada Co: Grenada MS 38902–0903
Landholding Agency: COE
Property Number: 31199011035
Status: Underutilized
Comment: 10 acres; no utilities; most recent use—wildlife and forestry management

Parcel 19
Grenada Lake
Section 9, T22N, R7E
Grenada Co: Grenada MS 38901–0903
Landholding Agency: COE
Property Number: 31199011036
Status: Underutilized
Comment: 20 acres; no utilities; most recent use—wildlife and forestry management

Missouri

Harry S Truman Dam & Reservoir
Warsaw Co: Benton MO 65355
Location: Triangular shaped parcel southwest of access road ''B'', part of Bledsoe Ferry Park Tract 150.
Landholding Agency: COE
Property Number: 31199030014
Status: Underutilized
Comment: 1.7 acres; potential utilities.

Nebraska

Hastings Radar Bomb Scoring
Hastings Co: Adams NE 69801–
Landholding Agency: Air Force
Property Number: 18199810027
Status: Underutilized
Comment: 11 acres.

North Carolina

Greenville Relay Station
Site C
Greenville Co: Pitt NC
Landholding Agency: GSA
Property Number: 54199840013
Status: Excess
Comment: 589 acres w/27,830 sq. ft. concrete block bldg., (2 acre chemical waste storage site located on SE portion of property)
GSA Number: 4–GR–NC–0721–B.

Ohio

Hannibal Locks and Dam
Ohio River
P.O. Box 8
Hannibal Co: Monroe OH 43931–0008
Location: Adjacent to the new Martinsville Bridge.
Landholding Agency: COE
Property Number: 31199010015
Status: Underutilized
Comment: 22 acres; river bank.

Jersey Tower Site
Tract No. 100 & 100E
Jersey Co: Licking OH 00000–
Landholding Agency: GSA
Property Number: 54199910013
Status: Surplus
Comment: 4.24 acres, subject to preservation of wetlands

GSA Number: 1–W–OH–813.

Oklahoma

Pine Creek Lake
Section 27
(See County) Co: McCurtain OK
Landholding Agency: COE
Property Number: 31199010923
Status: Unutilized
Comment: 3 acres; no utilities; subject to right of way for Oklahoma State Highway 3.

Pennsylvania

Mahoning Creek Lake
New Bethlehem Co: Armstrong PA 16242–9603
Location: Route 28 north to Belknap, Road #4
Landholding Agency: COE
Property Number: 31199010018
Status: Excess
Comment: 2.58 acres; steep and densely wooded.

Tracts 610, 611, 612
Shenango River Lake
Sharpsville Co: Mercer PA 16150–
Location: I–79 North, I–80 West, Exit Sharon. R18 North 4 miles, left on R518, right on Mercer Avenue.
Landholding Agency: COE
Property Number: 31199011001
Status: Excess
Comment: 24.09 acres; subject to flowage easement.

Tracts L24, L26
Crooked Creek Lake
Co: Armstrong PA 03051–
Location: Left bank—55 miles downstream of dam.
Landholding Agency: COE
Property Number: 31199011011
Status: Unutilized
Comment: 7.59 acres; potential for utilities.

Portion of Tract L–21A
Crooked Creek Lake, LR 03051
Ford City Co: Armstrong PA 16226–
Landholding Agency: COE
Property Number: 31199430012
Status: Unutilized
Comment: Approximately 1.72 acres of undeveloped land, subject to gas rights.

Tennessee

Tract 6827
Barkley Lake
Dover Co: Stewart TN 37058–
Location: 2½ miles west of Dover, TN.
Landholding Agency: COE
Property Number: 31199010927
Status: Excess
Comment: .57 acres; subject to existing easements.

Tracts 6002–2 and 6010
Barkley Lake
Dover Co: Stewart TN 37058–
Location: 3½ miles south of village of Tabaccoport.
Landholding Agency: COE
Property Number: 31199010928
Status: Excess
Comment: 100.86 acres; subject to existing easements.

Tract 11516
Barkley Lake
Ashland City Co: Dickson TN 37015–
Location: ½ mile downstream from Cheatham Dam
Landholding Agency: COE
Property Number: 31199010929
Status: Excess
Comment: 26.25 acres; subject to existing easements.

Tract 2319
J. Percy Priest Dam and Resorvoir
Murfreesboro Co: Rutherford TN 37130–
Location: West of Buckeye Bottom Road
Landholding Agency: COE
Property Number: 31199010930
Status: Excess
Comment: 14.48 acres; subject to existing easements.

Tract 2227
J. Percy Priest Dam and Resorvoir
Murfreesboro Co: Rutherford TN 37130–
Location: Old Jefferson Pike
Landholding Agency: COE
Property Number: 31199010931
Status: Excess
Comment: 2.27 acres; subject to existing easements.

Tract 2107
J. Percy Priest Dam and Reservoir
Murfreesboro Co: Rutherford TN 37130–
Location: Across Fall Creek near Fall Creek camping area.
Landholding Agency: COE
Property Number: 31199010932
Status: Excess
Comment: 14.85 acres; subject to existing easements.

Tracts 2601, 2602, 2603, 2604
Cordell Hull Lake and Dam Project
Doe Row Creek
Gainesboro Co: Jackson TN 38562–
Location: TN Highway 56
Landholding Agency: COE
Property Number: 31199010933
Status: Unutilized
Comment: 11 acres; subject to existing easements.

Tract 1911
J. Percy Priest Dam and Reservoir
Murfreesboro Co: Rutherford TN 37130–
Location: East of Lamar Road
Landholding Agency: COE
Property Number: 31199010934
Status: Excess
Comment: 15.31 acres; subject to existing easements.

Tract 2321
J. Percy Priest Dam and Reservoir
Murfreesboro Co: Rutherford TN 37130–
Location: South of Old Jefferson Pike
Landholding Agency: COE
Property Number: 31199010935
Property Number: Excess
Status: Excess
Comment: 12 acres; subject to existing easements.

Tract 7206
Barkley Lake
Dover Co: Stewart TN 37058–
Location: 2½ miles SE of Dover, TN.
Landholding Agency: COE
Property Number: 31199010936
Status: Excess
Comment: 10.15 acres; subject to existing easements.

Tracts 8813, 8814
Barkley Lake
Cumberland Co: Stewart TN 37050–
Location: 1½ miles East of Cumberland City.
Landholding Agency: COE
Property Number: 31199010937
Status: Excess
Comment: 96 acres; subject to existing easements.

Tract 8911
Barkley Lake
Cumberland City Co: Montgomery TN 37050–
Location: 4 miles east of Cumberland City.
Landholding Agency: COE
Property Number: 31199010938
Status: Excess
Comment: 7.7 acres; subject to existing easements.

Tract 11503
Barkley Lake
Ashland City Co: Cheatham TN 37015–
Location: 2 miles downstream from Cheatham Dam.
Landholding Agency: COE
Property Number: 31199010939
Status: Excess
Comment: 1.1 acres; subject to existing easements.

Tracts 11523, 11524
Barkley Lake
Ashland City Co: Cheatham TN 37015–
Location: 2½ miles downstream from Cheatham Dam.
Landholding Agency: COE
Property Number: 31199010940
Status: Excess
Comment: 19.5 acres; subject to existing easements.

Tract 6410
Barkley Lake
Bumpus Mills Co: Stewart TN 37028–
Location: 4½ miles SW. of Bumpus Mills.
Landholding Agency: COE
Property Number: 31199010941
Status: Excess
Comment: 17 acres; subject to existing easements.

Tract 9707
Barkley Lake
Palmyer Co: Montgomery TN 37142–
Location: 3 miles NE of Palmyer, TN. Highway 149
Landholding Agency: COE
Property Number: 31199010943
Status: Excess
Comment: 6.6 acres; subject to existing easements.

Tract 6949
Barkley Lake
Dover Co: Stewart TN 37058–
Location: 1½ miles SE of Dover, TN.
Landholding Agency: COE
Property Number: 31199010944
Status: Excess
Comment: 29.67 acres; subject to existing easements.

Tract 6005 and 6017
Barkley Lake
Dover Co: Stewart TN 37058–
Location: 3 miles south of Village of Tobaccoport.
Landholding Agency: COE
Property Number: 31199011173
Status: Excess
Comment: 5 acres; subject to existing easements.

Tracts K–1191, K–1135

Old Hickory Lock and Dam
Hartsville Co: Trousdale TN 37074–
Landholding Agency: COE
Property Number: 31199130007
Status: Underutilized
Comment: 92 acres (38 acres in floodway), most recent use—recreation.

Tract A–102
Dale Hollow Lake & Dam Project
Canoe Ridge, State Hyw 52
Celina Co: Clay TN 38551–
Landholding Agency: COE
Property Number: 31199140006
Status: Underutilized
Comment: 351 acres, most recent use—hunting, subject to existing easements.

Tract A–120
Dale Hollow Lake & Dam Project
Swann Ridge, State Hwy No. 53
Celina Co: Clay TN 38551–
Landholding Agency: COE
Property Number: 31199140007
Status: Underutilized
Comment: 883 acres, most recent use—hunting, subject to existing easements.

Tracts A–20, A–21
Dale Hollow Lake & Dam Project
Red Oak Ridge, State Hwy No. 53
Celina Co: Clay TN 38551–
Landholding Agency: COE
Property Number: 31199140008
Status: Underutilized
Comment: 821 acres, most recent use—recreation, subject to existing easements.

Tract D–185
Dale Hollow Lake & Dam Project
Ashburn Creek, Hwy No. 53
Livingston Co: Clay TN 38570–
Landholding Agency: COE
Property Number: 31199140010
Status: Underutilized
Comment: 883 acres, most recent use—hunting, subject to existing easements.

Texas

Camp Bullis, Tract 9
Fort Sam Houston (formerly)
San Antonio Co: Bexar TX 57501
Landholding Agency: COE
Property Number: 31199420462
Status: Surplus
Comment: 1.07 acres of undeveloped land, subject to exiting easements
GSA Number: 7–D–TX–0474E.

Washington

Spokane Satellite Tracking #1
Fairchild AFB
Portion of Site
Spokane WA 99224–
Landholding Agency: Air Force
Property Number: 18199810028
Status: Unutilized
Comment: 1.14 acres w/water well pump house.

Suitable/Unavailable Properties

Buildings (by State)

Alaska

10 Office Buildings
Anchorage Native Medical Center
255 Gambell St.
Anchorage Co: Anchorage AK 99501–
Landholding Agency: GSA
Property Number: 54199710002
Status: Surplus
Comment: high maintenance costs, does not meet Fed. seismic standards, presence of asbestos, PCB's, lead paint
GSA Number: 9–F–AK–750.

3 Storage Buildings
Anchorage Native Medical Center
255 Gambell St.
Anchorage Co: Anchorage AK 99501–
Landholding Agency: GSA
Property Number: 54199710003
Status: Surplus
Comment: high maintenance costs, does not meet Fed. seismic standards, presence of asbestos, PCB's, lead paint
GSA Number: 9–F–AK–750.

1 Hospital
Anchorage Native Medical Center
255 Gambell St.
Anchorage Co: Anchorage AK 99501–
Landholding Agency: GSA
Property Number: 54199710004
Status: Surplus
Comment: 173,336 sq. ft., high maintenance costs, does not meet Fed. seismic standards, presence of asbestos, PCB's, lead paint
GSA Number: 9–F–AK–750.

California

Santa Fe Flood Control Basin
Irwindale Co: Los Angeles CA 91706–
Landholding Agency: COE
Property Number: 31199011298
Status: Unutilized
Comment: 1400 sq. ft.; 1 story stucco; needs rehab; termite damage; secured area with alternate access.

112 Bldgs.—Skaggs Island
Naval Security Group
Skaggs Island Co: Sonoma CA
Landholding Agency: GSA
Property Number: 54199730001
Status: Excess
Comment: 32–13,374 sq. ft., temp. quonset huts to perm. wood/concrete most recent use—housing, admin., support facilities, remote location, below sea level, high maintenance
GSA Number: 9–N–CA–1488.

Vallejo Federal Building
823 Marin Ave.
Vallejo Co: Solano CA
Landholding Agency: GSA
Property Number: 54199740014
Status: Excess
Comment: 15,134 sq. ft., most recent use—office, possible asbestos/lead paint, historic significance
GSA Number: 9–G–CA–1502.

Marine Culture Laboratory
Granite Canyon
34500 Coast Highway
Monterey CA 93940–
Landholding Agency: GSA
Property Number: 54199830011
Status: Surplus
Comment: 3297 sq. ft. office bldg. & lab on 4.553 acres, envir. clean-up plans scheduled
GSA Number: 9–C–CA–1499.

Colorado

Bldg. 9023
U.S. Air Force Academy
Colorado Springs Co: El Paso CO 80814–2400
Landholding Agency: Air Force
Property Number: 18199730010
Status: Underutilized
Comment: 4112 sq. ft., most recent use—preschool.

Bldg. 9027
U.S. Air Force Academy
Colorado Springs Co: El Paso CO 80814–2400
Landholding Agency: Air Force
Property Number: 18199730011
Status: Underutilized
Comment: 4112 sq. ft., most recent use—child care center.

Connecticut

USCG Cutter Redwood Pier
150 Bank Street
New London CT 06320–6002
Landholding Agency: GSA
Property Number: 54199810017
Status: Excess
Comment: garage, shed, guard house located on concrete pier, most recent use—storage
GSA Number: 1–U–CT–540

Georgia

Phil Landrum Federal Bldg.
35 W. Church Street
Jasper Co: Pickens GA 30143–
Landholding Agency: GSA
Property Number: 54199810008
Status: Surplus
Comment: 9533 sq. ft., 2-story, no elevators/no handicapped ramps, steps need repair, most recent use—postal service with parking lot.
GSA Number: 4–G–GA–854.

Idaho

Bldg. 224
Mountain Home Air Force
Co: Elmore ID 83648–
Landholding Agency: Air Force
Property Number: 18199840008
Status: Unutilized
Comment: 1890 sq. ft., no plumbing facilities, possible asbestos/lead paint, most recent use—office.

Illionis

Bldg. 7
Ohio River Locks & Dam No. 53
Grand Chain Co: Pulaski IL 62941–9801
Location: Ohio River Locks and Dam No. 53 at Grand Chain
Landholding Agency: COE
Property Number: 31199010001
Status: Unutilized
Comment: 900 sq. ft.; 1 floor wood frame; most recent use—residence.

Bldg. 6
Ohio River Locks & Dam No. 53
Grand Chain Co: Pulaski IL 62941–9801
Location: Ohio River Locks and Dam No. 53 at Grand Chain
Landholding Agency: COE
Property Number: 31199010002
Status: Unutilized
Comment: 900 sq. ft.; one floor wood frame; most recent use—residence.

Bldg. 5
Ohio River Locks & Dam No. 53
Grand Chain Co: Pulaski IL 62941–9801
Location: Ohio River Locks and Dam No. 53 at Grand Chain
Landholding Agency: COE
Property Number: 31199010003

Status: Unutilized
Comment: 900 sq. ft.; one floor wood frame; most recent use—residence.

Bldg. 4
Ohio River Locks & Dam No. 53
Grand Chain Co: Pulaski IL 62941–9801
Location: Ohio River Locks and Dam No. 53 at Grand Chain
Landholding Agency: COE
Property Number: 31199010004
Status: Unutilized
Comment: 900 sq. ft.; one floor wood frame; most recent use—residence.

Bldg. 3
Ohio River Locks & Dam No. 53
Grand Chain Co: Pulaski IL 62941–9801
Location: Ohio River Locks and Dam No. 53 at Grand Chain
Landholding Agency: COE
Property Number: 31199010005
Status: Unutilized
Comment: 900 sq. ft.; one floor wood frame.

Bldg. 2
Ohio River Locks & Dam No. 53
Grand Chain Co: Pulaski IL 62941–9801
Location: Ohio River Locks and Dam No. 53 at Grand Chain
Landholding Agency: COE
Property Number: 31199010006
Status: Unutilized
Comment: 900 sq. ft.; one floor wood frame; most recent use—residence.

Bldg. 1
Ohio River Locks & Dam No. 53
Grand Chain Co: Pulaski IL 62941–9801
Location: Ohio River Locks and Dam No. 53 at Grand Chain
Landholding Agency: COE
Property Number: 31199010007
Status: Unutilized
Comment: 900 sq. ft.; one floor wood frame; most recent use—residence.

Radar Communication Link
½ mi east of 116th St.
Co: Will IL
Landholding Agency: GSA
Property Number: 54199820013
Status: Excess
Comment: 297 sq. ft. concrete block bldg. with radar tower antenna, possible lead based paint, most recent use—air traffic control
GSA Number: 2–U–IL–696.

Natl Weather Svc. Meter. Obs.
Morris Blacktop Rd.
Miller Township Co: LaSalle IL 61341–
Landholding Agency: GSA
Property Number: 54199820014
Status: Excess
Comment: 1400 sq. ft. office bldg. & 500 sq. ft. garage
GSA Number: 1–C–IL–708.

Iowa

Bldg. 00627
Sioux Gateway Airport
Sioux City Co: Woodbury IA 51110–
Landholding Agency: Air Force
Property Number: 18199310001
Status: Unutilized
Comment: 1932 sq. ft., 1-story concrete block bldg., most recent use—storage, pigeon infested, contamination investigation in progress.

Bldg. 00669
Sioux Gateway Airport
Sioux City Co: Woodbury IA 51110–
Landholding Agency: Air Force
Property Number: 18199310002
Status: Unutilized
Comment: 1113 sq. ft., 1-story concrete block bldg., contamination clean-up in process.

Maryland

Duplex House w/detached garage
710 Trail Ave.
Frederick MD 21702–5000
Landholding Agency: GSA
Property Number: 54199830007
Status: Excess
Comment: Total 1230 sq. ft., needs repair, presence of lead based paint
GSA Number: 4–F–MD–0597.

Cheltenham Naval Comm. Dtchmt.
9190 Commo Rd., AKA 7700
Redman Rd.
Clinton Co: Prince George MD 20397–5520
Landholding Agency: GSA
Property Number: 77199330010
Status: Excess
Comment: 32 bldgs., various sq. ft., most recent use—admin/comm, & 39 family housing units on 230.35 acres, presence of lead paint/asbestos, 20.09 acres leased to County w/improvements
GSA Number: 4–N–MD–544A.

Michigan

Bldg. 50
Calumet Air Force Station
Calumet Co. Keweenaw MI 49913–
Landholding Agency: Air Force
Property Number: 18199010790
Status: Excess
Comment: 6171 sq. ft.; 1 story; concrete block; potential utilities; possible asbestos; most recent use—Fire Department vehicle parking building.

Bldg. 14
Calumet Air Force Station
Calumet Co. Keweenaw MI 49913–
Landholding Agency: Air Force
Property Number: 18199010833
Status: Excess
Comment: 6751 sq. ft.; 1 floor concrete block; possible asbestos; most recent use—gymnasium.

Bldg. 16
Calumet Air Force Station
Calumet Co: Keweenaw MI 49913–
Landholding Agency: Air Force
Property Number: 18199010834
Status: Excess
Comment: 3000 sq. ft.; 1 floor concrete block; most recent use—commissary facility.

Bldg. 15
Calumet Air Force Station
Calumet Co: Keweenaw MI 49913–
Landholding Agency: Air Force
Property Number: 18199010864
Status: Excess
Comment: 538 sq. ft.; 1 floor; concrete/wood structure; potential utilities; most recent use—gymnasium facility.

Detroit Job Corps Center
10401 E. Jefferson & 1438 Garland;
1265 St. Clair
Detroit Co: Wayne MI 42128–
Landholding Agency: GSA
Property Number: 54199510002
Status: Surplus
Comment: Main bldg. is 80,590 sq. ft., 5-story, adjacent parking lot, 2nd bldg. on St. Clair Ave. is 5140 sq. ft., presence of asbestos in main bldg., to be vacated 8/97
GSA Number: 2–L–MI–757.

Parcel 2
Tawas Point Lighthouse
East Tawas Co: Iosco MI
Landholding Agency: GSA
Property Number: 54199730012
Status: Excess
Comment: Lighthouse, duplex dwelling, garage, storage, possible asbestos/lead paint, wetlands, listed on National Register of Historic Places, restricted access
GSA Number: 1–U–MI–500.

S. Haven Keeper's Dwelling
91 Michigan Ave.
South Haven Co: Van Buren MI 49090–
Landholding Agency: GSA
Property Number: 54199740012
Status: Excess
Comment: 3257 sq. ft., 2-story dwelling and 800 sq. ft. garage, presence of asbestos/lead paint
GSA Number: 1–U–MI–475C.

Eagle Harbor Lighthouse
Rt. 26
Eagle Harbor Co: Keweenaw MI 44950–
Landholding Agency: GSA
Property Number: 54199740018
Status: Excess
Comment: 2 bldgs., 3111 sq. ft. combined, presence of asbestos/lead paint, most recent use—museum and storage
GSA Number: 1–U–MI–420A.

Montana

Missoula Fireweather Site
Highway 83
Missoula MT 59801–
Landholding Agency: GSA
Property Number: 54199830012
Status: Surplus
Comment: 256 sq. ft. metal transmitter bldg. & 384 sq. ft. garage, distance to available water unknown
GSA Number: 7–C–MT–610.

Nebraska

Bldg. 64
Offutt AFB
Silver Creek Co: Nance NE 68113–
Landholding Agency: Air Force
Property Number: 18199720040
Status: Unutilized
Comment: 4000 sq. ft., most recent use—admin., needs major rehab, possible asbestos/lead base paint.

NE City Repair/Storage Garage
HWY 2
Nebraska City Co: Otoe NE 68410–
Landholding Agency: GSA
Property Number: 54199830003
Status: Excess
Comment: 6400 sq. ft. sheet metal bldg., w/concrete and gravel floor on 1.84 acres of land
GSA Number: 7–D–NE–525.

New Hampshire

Bldg. 127
New Boston Air Force Station
Amherst Co: Hillsborough NH 03031–1514
Landholding Agency: Air Force
Property Number: 18199320057

Status: Excess
Comment: 698 sq. ft., 1-story, concrete and metal frame, possible asbestos, access restrictions, most recent use—storage.

New Jersey

Gibbsboro Air Force Station
Gibbsboro Co: Camden NJ
Landholding Agency: GSA
Property Number: 54199810018
Status: Excess
Comment: 19 acres w//24 structures including 1344 sq. ft. office bldg., 5652 sq. ft. storage bldg., bowling center and support facilities
GSA Number: 1–D–NJ–603B.

New York

Reserve Center
Sqt. H. Grover H. O'Connor USARC
303 N. Lackawanna Street
Wayland Co: Steuben NY 14572–
Landholing Agency: GSA
Property Number: 21199710239
Status: Unutilized
Comment: 2 bldgs., 17,102 sq. ft. and 1,325 sq. ft., 1-story
GSA Number: 1–D–NY–866.

North Carolina

Federal Building
146 North Main Street
Rutherfordton Co: Rutherford NC 28139–
Landholding Agency: GSA
Property Number: 54199730022
Status: Excess
Comment: 4919 sq. ft., most recent use—office, good condition
GSA Number: 4–G–NC–727.

Tarheel Army Missile Plant
Burlington Co: Alamance NC 27215–
Landholding Agency: GSA
Property Number: 54199820002
Status: Excess
Comment: 31 bldgs., presence of asbestos, most recent use—admin., warehouse, production space and 10.04 acres parking area, contamination at site—environmental clean up in process
GSA Number: 4–D–NC–593.

Ohio

Bldg.—Berlin Lake
7400 Bedell Road
Berlin Center Co: Mahoning OH 44401–9797
Landholding Agency: COE
Property Number: 31199640001
Status: Unutilized
Comment: 1420 sq. ft., 2-story brick w/garage and basement, most recent use—residential, secured w/alternate access.

Zanesville Federal Building
65 North Fifth Street
Zanesville Co: Muskingum OH
Landholding Agency: GSA
Property Number: 54199520018
Status: Excess
Comment: 18750 sq. ft., most recent use—office, possible asbestos, eligible for listing on the Natl Register of Historic Places
GSA Number: 2–G–OH–781A.

Keeper's Dwelling & Shed
110 Wall Street
Huron OH 55802–
Landholding Agency: GSA
Property Number: 54199740015
Status: Excess
Comment: 5100 sq. ft. single family residence and a 216 sq. ft. storage shed, possible lead based paint
GSA Number: 1–U–OH–800.

Oklahoma

Fed. Bldg./Courthouse
N. Washington & Broadway Streets
Ardmore Co: Carter OK 73402–
Landholding Agency: GSA
Property Number: 54199820009
Status: Excess
Comment: 4000 sq. ft. bldg. w/parking, 3 story plus basement, most recent use—office, subject to historic preservation covenants
GSA Number: 7–G–TX–559.

Oregon

Gus Solomon U.S. Courthouse
620 SW Main Street
Portland Co: Multnomah OR 97205–
Landholding Agency: GSA
Property Number: 54199730023
Status: Underutilized
Comment: 15,775 sq. ft., 7-story, does not meet Federal seismic requirements, National Register of Historic Places, pending lease
GSA Number: 7–G–OR–724.

Pennsylvania

Tract 302B
Grays Landing Lock & Dam Project
Old Glassworks Co: Greene PA 15338–
Landholding Agency: COE
Property Number: 31199430017
Status: Unutilized
Comment: 502 sq. ft., 2-story, needs repair, most recent use—beauty shop/residence, if used for habitation must be flood proofed or removed off-site.

Tract 353
Grays Landing Lock & Dam Project
Greensboro Co: Greene PA 15338–
Landholding Agency: COE
Property Number: 31199430019
Status: Unutilized
Comment: 812 sq. ft., 2-story, log structure, needs repair, most recent use—residential, if used for habitation must be flood proofed or removed off-site.

Tract 403A
Grays Landing Lock & Dam Project
Greensboro Co: Greene PA 15338–
Landholding Agency: COE
Property Number: 31199430021
Status: Unutilized
Comment: 620 sq. ft., 2-story, needs repair, most recent use—residential, if used for habitation must be flood proofed or removed off-site.

Tract 403B
Grays Landing Lock & Dam Project
Greensboro Co: Greene PA 15338–
Landholding Agency: COE
Property Number: 31199430022
Status: Unutilized
Comment: 1600 sq. ft., 2-story, brick structure, needs repair, most recent use—residential, if used for habitation must be flood proofed or removed off-site.

Tract 403C
Grays Landing Lock & Dam Project
Greensboro Co: Greene PA 15338–
Landholding Agency: COE
Property Number: 31199430023
Status: Unutilized
Comment: 672 sq. ft., 2-story carriage house/stable barn type structure, needs repair, most recent use—storage/garage, if used for habitation must be flood proofed or removed.

Tract 434
Grays Landing Lock & Dam Project
Greensboro Co: Greene PA 15338–
Landholding Agency: COE
Property Number: 31199430024
Status: Unutilized
Comment: 1059 sq. ft., 2-story, wood frame, 2 apt. units, historic property, if used for habitation must be flood proofed or removed off-site.

Tract 224
Grays Landing Lock & Dam Project
Greensboro Co: Greene PA 15338–
Landholding Agency: COE
Property Number: 31199440001
Status: Unutilized
Comment: 1040 sq. ft., 2 story bldg., needs repair, historic struct., flowage easement, if habitation is desired property will be required to be flood proofed or removed off site.

Federal Office Building
1421 Cherry Street
Philadelphia PA 19107–
Landholding Agency: GSA
Property Number: 54199730004
Status: Surplus
Comment: 12 floors, brick, most recent use—office, portion occupied by Federal tenants
GSA Number: 4–G–PA–776.

Airport Surv. Radar Site
Beacon Road
New Cumberland Co: Cumberland PA 17070–
Landholding Agency: GSA
Property Number: 54199810010
Status: Surplus
Comment: 1512 sq. ft., concrete block bldg. and 340 sq. ft. bldg. in disrepair, water and sewer lines not installed, limited accessibility
GSA Number: 4–U–PA–783.

Tennessee

Federal Building
130 Main Street
Carthage Co: Smith TN 37030–
Landholding Agency: GSA
Property Number 54199730010
Status: Excess
Comment: 7295 sq. ft., 3-story, excellent condition, most recent use—office space
GSA Number: 4–G–TN–643.

Texas

Airport Surv. Radar Site Asr7
3203 Glade Road
Colleyville Co: Tarrant TX 76034–
Landholding Agency: GSA
Property Number: 54199830005
Status: Excess
Comment: 800 sq. ft. equipment building on 1.35 acres
GSA Number: 7–U–TX–1054.

Virginia

National Weather Service
Route 3
Volens Co: Halifax VA

Landholding Agency: GSA
Property Number: 54199710001
Status: Excess
Comment: 1859 sq. ft. brick veneer, most recent use—office with 1.3 acres/parking lot
GSA Number: 4–C–VA–713.

Washington

Vancouver Info Center
Interstate Rt 5
Vancouver Co: Clark WA 98663–
Landholding Agency: GSA
Property Number: 54199740011
Status: Excess
Comment: 1200 sq. ft., most recent use—visitor info center, excellent condition
GSA Number: 9–GR–WA–514E.

747 Building Complex
805 Goethals Drive
Richland Co: Benton WA 99352–
Landholding Agency: GSA
Property Number: 54199820005
Status: Surplus
Comment: 4 bldgs. (2 bldgs. utilized w/lease provisions), most recent use—lags/offices, presence of asbestos/lead paint
GSA Number: 9–B–WA–1145.

Wisconsin

Former Lockmaster's Dwelling
DePere Lock
100 James Street
De Pere Co: Brown WI 54115–
Landholding Agency: COE
Property Number: 31199011526
Status: Unutilized
Comment: 1224 sq. ft.; 2 story brick/wood frame residence; needs rehab; secured area with alternate access.

Land (by State)

California

(P) Camp Elliott
Rosedale Tract
San Diego Co: San Diego CA
Landholding Agency: GSA
Property Number: 54199310008
Status: Surplus
Comment: Parcel 1—0.15 acre, Parcel 2—0.17 acre, located in the narrow median strip between Murphy Canyon Rd. and State Highway 15, previously leased by homeless provider
GSA Number: 9–GR(6)–CA–694A.

Georgia

NARACS Site
North side of GA Hwy 36, 5 mi. west of I–75
Co: Lamar GA
Landholding Agency: GSA
Property Number: 54199730002
Status: Excess
Comment: 76.83 acres with deep well and pump house, most recent use—cattle grazing
GSA Number: 4–U–GA–0855.

Illinois

Lake Shelbyville
Shelbyville Co: Shelby & Moultrie IL 62565–9804
Landholding Agency: COE
Property Number: 31199240004
Status: Unutilized
Comment: 5 parcels of land equalling 0.70 acres, improved w/4 small equipment storage bldgs. and a small access road, easement restrictions.

Indiana

Portion
Bureau of Prisons Vigo Farm
Linden Twp Co: Vigo IN
Landholding Agency: GSA
Property Number: 54199620002
Status: Excess
Comment: 17.65 acres, most recent use—agriculture.
GSA Number: 2–J–IN–507C.

Kentucky

Portion of Tract 3300
Fishtrap Lake
Co: Pike KY 41548–
Landholding Agency: COE
Property Number: 31199830002
Status: Excess
Comment: 0.40 acre encroachment, steep hill.

Maine

GWEN Site (Patten)
Loring AFB
Stacyville Co: Herseytown ME 04742–
Landholding Agency: GSA
Property Number: 18199640018
Status: Excess
Comment: 23.55 acres w/226 sq. ft. relay station.
GSA Number: 1–D–ME–630.

Michigan

Parcel 3, Parcel B
East Tawas Co: Iosco MI
Landholding Agency: GSA
Property Number: 54199730013
Status: Excess
Comment: 2.02 acres of land, wooded and primarily wetlands, restricted access.
GSA Number: 1–U–MI–500.

Nebraska

Land/Offutt Comm. Annex No. 4
Silver Creek Co: Nance NE 68663–
Landholding Agency: Air Force
Property Number: 18199720041
Status: Unutilized
Comment: 354 acres, most recent use—radio transmitter site, wetlands, isolated area.

New Hampshire

Land—7.97
Army Reserve Center,
Industrial Park
Belmont Co: Belnap NH
Landholding Agency: GSA
Property Number: 21199710118
Status: Excess
Comment: 7.97 acres, severe sloping.
GSA Number: 1–D–NH–0489.

New York

Galeville Army Training Site
Shawangunk Co: Ulster NY 12589–
Landholding Agency: GSA
Property Number: 21199510128
Status: Excess
Comment: 621 acres, improved w/inactive runways, 234 acres is wetlands and habitat for threatened species.
GSA Number: 2–D–NY–807.

North Dakota

Lot 3/0.16 acre
Snake Creek Cabin Site/Tract C272A
Co: Mclean ND
Landholding Agency: COE
Property Number: 31199720003
Status: Unutilized
Comment: 0.16 of an acre, most recent use—private recreation (cottage site), floodplain.

Oklahoma

Land
Lake Texoma
Co: Bryan OK
Landholding Agency: COE
Property Number: 31199820002
Status: Excess
Comment: 8.262 acres, most recent use—undeveloped recreation.

Oregon

Portion, Astoria Field Office
Via Hwy 30
Astoria Co: Clatsop OR 97103–
Landholding Agency: GSA
Property Number: 54199640015
Status: Excess
Comment: 20.6 acres, includes wetlands & tidelands, parking lot under construction, portion located within floodplain
GSA Number: 9–D–OR–447F.

Pennsylvania

East Branch Clarion River Lake
Wilcox Co: Elk PA
Location: Free camping area on the right bank off entrance roadway.
Landholding Agency: COE
Property Number: 31199011012
Status: Underutilized
Comment: 1 acre; most recent use—free campground.

Dashields Locks and Dam (Glenwillard, PA)
Crescent Twp. Co: Allegheny PA 15046–0475
Landholding Agency: COE
Property Number: 31199210009
Status: Unutilized
Comment: 0.58 acres, most recent use—baseball field.

Puerto Rico

La Hueca—Naval Station
Roosevelt Roads
Vieques PR 00765–
Landholding Agency: GSA
Property Number: 54199420006
Status: Excess
Comment: 323 acres, cultural site.

Texas

Parcel #222
Lake Texoma
Co: Grayson TX
Location: C. Meyerheim survey A–829 J. Hamilton suvey A–529
Landholding Agency: COE
Property Number: 31199010421
Status: Excess
Comment: 52.80 acres; most recent use—recreation.

Texas

Lots 6, 7, & 8 (Block 7)
River Ridge Subdivision
14100 block of River Rock Dr.
Corpus Christi Co: Nueces TX 78410–
Landholding Agency: GSA
Property Number: 54199820007
Status: Surplus
Comment: 1.915 acres (3 lots), vacant residential lots
GSA Number: 7–J–TX–1052.

Washington

Sandpont Control Tower
Near 7600 Sandponit Way, NE
Seattle Co: King WA 98115–
Landholding Agency: GSA
Property Number: 54199440003
Status: Excess
Comment: 11.3 acres, w/deteriorated bldg. and parking lot
GSA Number: 9–C–WA–1069.

West Virginia

East Williamson
Segment 7
Williamson Co: Mingo WV 25661–
Landholding Agency: GSA
Property Number: 54199820012
Status: Excess
Comment: 3.17 acres sectioned, floodplain
GSA Number: 4–D–WV–528.

Suitable/To Be Excessed

Buildings (by State)

New York

Bldg. 1
Hancock Field
Syracuse Co: Onandaga NY 13211–
Landholding Agency: Air Force
Property Number: 18199530048
Status: Excess
Comment: 4,955 sq. ft., 2 story concrete block, needs rehab, most recent use—administration.

Bldg. 2
Hancock Field
Syracuse Co: Onandaga NY 13211–
Landholding Agency: Air Force
Property Number: 18199530049
Status: Excess
Comment: 1,476 sq. ft., 1 story concrete block, needs rehab, most recent use—repair shop.

Bldg. 6
Hancock Field
Syracuse Co: Onandaga NY 13211–
Landholding Agency: Air Force
Property Number: 18199530050
Status: Excess
Comment: 2,466 sq. ft., 1 story concrete block, needs rehab, most recent use—repair shop.

Bldg. 11
Hancock Field
Syracuse Co: Onandaga NY 13211–
Landholding Agency: Air Force
Property Number: 18199530051
Status: Excess
Comment: 1,750 sq. ft., 1 story wood frame, needs rehab, most recent use—storage.

Bldg. 8
Hancock Field
Syracuse Co: Onandaga NY 13211–
Landholding Agency: Air Force
Property Number: 18199530052
Status: Excess
Comment: 1,812 sq. ft., 1 story concrete block, needs rehab, most recent use—repair shop communications.

Bldg. 14
Hancock Field
Syracuse Co: Onandaga NY 13211–
Landholding Agency: Air Force
Property Number: 18199530053
Status: Excess
Comment: 156 sq. ft., 1 story wood frame, most recent use—vehicle fuel station.

Bldg. 30
Hancock Field
Syracuse Co: Onandaga NY 13211–
Landholding Agency: Air Force
Property Number: 18199530054
Status: Excess
Comment: 3,649 sq. ft., 1 story, needs rehab, most recent use—assembly hall.

Bldg. 31
Hancock Field
Syracuse Co: Onandaga NY 13211–
Landholding Agency: Air Force
Property Number: 18199530055
Status: Excess
Comment: 8,252 sq. ft., 1 story concrete block, most recent use—storage.

Bldg. 32
Hancock Field
Syracuse Co: Onandaga NY 13211–
Landholding Agency: Air Force
Property Number: 18199530056
Status: Excess
Comment: 1,627 sq. ft., 1 story concrete block, most recent use—storage.

South Carolina

5 Bldgs.
Charleston AFB Annex Housing
N. Charleston SC 29404–4827
Location: 101 Vector Ave., 112, 114, 116, 118 Intercept Ave.
Landholding Agency: Air Force
Property Number: 18199830035
Status: Unutilized
Comment: 1433 sq. ft. + 345 sq. ft. carport, lead base paint/exterior most recent use—residential.

1 Bldg.
Charleston AFB Annex Housing
N. Charleston SC 29404–4827
Location: 102 Vector Ave.
Landholding Agency: Air Force
Property Number: 18199830036
Status: Unutilized
Comment: 1545 sq. ft. + 345 sq. ft. carport, lead base paint/exterior most recent use—residential.

1 Bldg.
Charleston AFB Annex Housing
N. Charleston SC 29404–4827
Location: 103 Vector Ave.
Landholding Agency: Air Force
Property Number: 18199830037
Status: Unutilized
Comment: 1445 sq. ft. + 345 sq. ft. carport, lead base paint/exterior most recent use—residential.

18 Bldg.
Charleston AFB Annex Housing
N. Charleston SC 29404–4827
Location: 104–107 Vector Ave., 108–111, 113, 115, 117, 119 Intercept Ave., 120–122 Radar Ave.
Landholding Agency: Air Force
Property Number: 18199830038
Status: Unutilized
Comment: 1265 sq. ft. + 353 sq. ft. carport, lead base paint/exterior most recent use—residential.

Land

Georgia

Lake Sidney Lanier
Co: Forsyth GA 30130–
Location: Located on Two Mile Creek adj. to State Route 369
Landholding Agency: COE
Property Number: 31199440010
Status: Unutilized
Comment: 0.25 acres, endangered plant species.

Lake Sidney Lanier-3 parcels
Gainesville Co: Hall GA 30503–
Location: Between Gainesville H.S. and State Route 53 By-Pass
Landholding Agency: COE
Property Number: 31199440011
Status: Unutilized
Comment: 3 parcels totalling 5.17 acres, most recent use—buffer zone, endangered plant species.

Indiana

Brookville Lake—Land
Liberty Co: Union IN 47353–
Landholding Agency: COE
Property Number: 31199440009
Status: Unutilized
Comment: 6.91 acres, limited utilities.

Kansas

Parcel #1
Fall River Lake
Section 26
Co: Greenwood KS
Landholding Agency: COE
Property Number: 31199010065
Status: Unutilized
Comment: 126.69 acres; most recent use—recreation and leased cottage sites.

Parcel No. 2, El Dorado Lake
Approx. 1 mi east of the town of El Dorado
Co: Butler KS
Landholding Agency: COE
Property Number: 31199210005
Status: Unutilized
Comment: 11 acres, part of a relocated railroad bed, rural area.

Massachusetts

Buffumville Dam
Flood Control Project
Gale Road
Carlton Co: Worcester MA 01540–0155
Location: Portion of tracts B–200, B–248, B–251, B–204, B–247, B–200 and B–256
Landholding Agency: COE
Property Number: 31199010016
Status: Excess
Comment: 1.45 acres.

Minnesota

Tract #3
Lac Qui Parle Flood Control Project
County Rd. 13
Watson Co: Lac Qui Parle MN 56295–
Landholding Agency: COE
Property Number: 31199340006
Status: Unutilized
Comment: approximately 2.9 acres, fallow land.

Tract #34
Lac Qui Parle Flood Control Project
Marsh Lake
Watson Co: Lac Qui Parle MN 56295–
Landholding Agency: COE
Property Number: 3119934007
Status: Unutilized
Comment: appxo. 8 acres, fallow land.

New York

14.90 Acres
Hancock Field
Syracuse Co: Onandaga NY 13211–
Landholding Agency: Air Force
Landholding Agency: Air Force
Property Number: 18199530057
Status: Excess
Comment: Fenced in compound, most recent use—Air Natl. Guard Communication & Electronics Group.

Tennessee

Tract D–456
Cheatham Lock and Dam
Ashland Co: Cheatham TN 37015–
Location: Right downstream bank of Sycamore Creek.
Landholding Agency: COE
Property Number: 31199010942
Status: Excess
Comment: 8.93 acres; subject to existing easements.

Texas

Corpus Christi Ship Channel
Corpus Christi Co: Neuces TX
Location: East side of Carbon Plant Road, approx. 14 miles NW of downtown Corpus Christi
Landholding Agency: COE
Property Number: 31199240001
Status: Unutilized
Comment: 4.4 acres, most recent use—farm land.

Unsuitable Properties

Buildings (by State)

Alabama

Bldg. 426, Maxwell AFB
Montgomery Co: Montgomery AL 36114–3112
Landholding Agency: Air Force
Property Number: 18199720027
Status: Unutilized
Reasons: Secured Area; Extensive deterioration.

Sand Island Light House
Gulf of Mexico
Mobile AL
Landholding Agency: GSA
Property Number: 54199610001
Status: Excess
Reason: Inaccessible
GSA Number: 4–U–AL–763.

Alaska

Bldg. 203
Tin City Air Force Station
21 CSG/DEER
Elmendorf AFB Co: Anchorage AK 99506–5000
Landholding Agency: Air Force
Property Number: 18199010296
Status: Unutilized
Reasons: Isolated area; Not accessible by road; Contamination; Secured Area.

Bldg. 165
Sparrevohn Air Force Station
21 CSG/DEER
Elmendorf AFB Co: Anchorage AK 99506–5000
Landholding Agency: Air Force
Property Number: 18199010298
Status: Unutilized
Reasons: Isolated area; Not accessible by road; Contamination; Secured Area.

Bldg. 150
Sparrevohn Air Force Station
21 CSG/DEER
Elmendorf AFB Co: Anchorage AK 99506–5000
Landholding Agency: Air Force
Property Number: 18199010299
Status: Unutilized
Reasons: Isolated area; Not accessible by road; Contamination; Secured Area.

Bldg. 130
Sparrevohn Air Force Station
21 CSG/DEER
Elmendorf AFB Co: Anchorage AK 99506–5000
Landholding Agency: Air Force
Property Number: 18199010300
Status: Unutilized
Reasons: Isolated area; Not accessible by road; Contamination; Secured Area.

Bldg. 306
King Salmon Airport
21 CSG/DEER
Elmendorf AFB Co: Anchorage AK 99506–5000
Landholding Agency: Air Force
Property Number: 18199010301
Status: Unutilized
Reasons: Isolated area; Not accessible by road; Contamination; Secured Area.

Bldg. 11–230
Elmendorf Air Force Base
21 CSG/DEER
Elmendorf AFB Co: Anchorage AK 99506–5000
Landholding Agency: Air Force
Property Number: 18199010303
Status: Unutilized
Reasons: Contamination; Secured Area.

Bldg. 63–320
Elmendorf Air Force Base
21 CSG/DEER
Elmendorf AFB Co: Anchorage AK 99506–5000
Landholding Agency: Air Force
Property Number: 18199010307
Status: Unutilized
Reasons: Contamination; Secured Area.

Bldg. 63–325
Elmendorf Air Force Base
21 CSG/DEER
Elmendorf AFB Co: Anchorage AK 99506–5000
Landholding Agency: Air Force
Property Number: 18199010308
Status: Unutilized
Reasons: Contamination; secured area.

Bldg. 103
Ft. Yukon Air Force Station
21 CSG/DEER
Elmendorf AFB Co: Anchorage AK 99506–5000
Landholding Agency: Air Force
Property Number: 18199010309
Status: Unutilized
Reasons: Isolated area; not accessible by road; contamination; secured area.

Bldg. 110
Ft. Yukon Air Force Station
21 CSG/DEER
Elmendorf AFB Co: Anchorage AK 99506–5000
Landholding Agency: Air Force
Property Number: 18199010310
Status: Unutilized
Reasons: Isolated area; not accessible by road; contamination; secured area.

Bldg. 112
Ft. Yukon Air Force Station
21 CSG/DEER
Elmendorf AFB Co: Anchorage AK 99506–5000
Landholding Agency: Air Force
Property Number: 18199010311
Status: Unutilized
Reasons: Isolated area; not accessible by road; contamination; secured area.

Bldg. 113
Ft. Yukon Air Force Station
21 CSG/DEER
Elmendorf AFB Co: Anchorage AK 99506–5000
Landholding Agency: Air Force
Property Number: 18199010312
Status: Unutilized
Reasons: Isolated area; not accessible by road; contamination; secured area.

Bldg. 114
Ft. Yukon Air Force Station
21 CSG/DEER
Elmendorf AFB Co: Anchorage AK 99506–5000
Landholding Agency: Air Force
Property Number: 18199010313
Status: Unutilized
Reasons: Isolated area; not accessible by road; contamination; secured area.

Bldg. 115
Ft. Yukon Air Force Station
21 CSG/DEER
Elmendorf AFB Co: Anchorage AK 99506–5000
Landholding Agency: Air Force
Property Number: 18199010314
Status: Unutilized
Reasons: Isolated area; not accessible by road; contamination; secured area.

Bldg. 118
Ft. Yukon Air Force Station
21 CSG/DEER
Elmendorf AFB Co: Anchorage AK 99506–5000
Landholding Agency: Air Force
Property Number: 18199010315
Status: Unutilized
Reasons: Isolated area; not accessible by road; contamination; secured area.

Bldg. 1018
Ft. Yukon Air Force Station
21 CSG/DEER
Elmendorf AFB Co: Anchorage AK 99506–5000
Landholding Agency: Air Force
Property Number: 18199010317
Status: Unutilized
Reasons: Isolated area; not accessible by road; contamination; secured area.

Bldg. 1025
Ft. Yukon Air Force Station
21 CSG/DEER
Elmendorf AFB Co: Anchorage AK 99506–5000
Landholding Agency: Air Force
Property Number: 18199010318
Status: Unutilized
Reasons: Isolated area; not accessible by road; contamination; secured area.

Bldg. 1055
Ft. Yukon Air Force Station
21 CSG/DEER
Elmendorf AFB Co: Anchorage AK 99506–5000
Landholding Agency: Air Force
Property Number: 18199010319
Status: Unutilized
Reasons: Isolated area; not accessible by road; contamination; secured area.

Bldg. 107
Cape Lisburne Air Force Station
21 CSG/DEER
Elmendorf AFB Co: Anchorage AK 99506–5000
Landholding Agency: Air Force
Property Number: 18199010320
Status: Unutilized
Reasons: Isolated area; not accessible by road; contamination; secured area.

Bldg. 115
Cape Lisburne Air Force Station
21 CSG/DEER
Elmendorf AFB Co: Anchorage AK 99506–5000
Landholding Agency: Air Force
Property Number: 18199010321
Status: Unutilized
Reasons: Isolated area; not accessible by road; contamination; secured area.

Bldg. 113
Cape Lisburne Air Force Station
21 CSG/DEER
Elmendorf AFB Co: Anchorage AK 99506–5000
Landholding Agency: Air Force
Property Number: 18199010322
Status: Unutilized
Reasons: Isolated area; not accessible by road; contamination; secured area.

Bldg. 150
Cape Lisburne Air Force Station
21 CSG/DEER
Elmendorf AFB Co: Anchorage AK 99506–5000
Landholding Agency: Air Force
Property Number: 18199010323
Status: Unutilized
Reasons: Isolated area; not accessible by road; contamination; secured area.

Bldg. 152
Cape Lisburne Air Force Station
21 CSG/DEER
Elmendorf AFB Co: Anchorage AK 99506–5000
Landholding Agency: Air Force
Property Number: 18199010324
Status: Unutilized
Reasons: Isolated area; not accessible by road; contamination; secured area.

Bldg. 301
Cape Lisburne Air Force Station
21 CSG/DEER
Elmendorf AFB Co: Anchorage AK 99506–5000
Landholding Agency: Air Force
Property Number: 18199010325
Status: Unutilized
Reasons: Isolated area; not accessible by road; contamination; secured area.

Bldg. 1001
Cape Lisburne Air Force Station
21 CSG/DEER
Elmendorf AFB Co: Anchorage AK 99506–5000
Landholding Agency: Air Force
Property Number: 18199010326
Status: Unutilized
Reasons: Isolated area; not accessible by road; contamination; secured area.

Bldg. 1003
Cap Lisburne Air Force Station
21 CSG/DEER
Elmendorf AFB Co: Anchorage AK 99506–5000
Landholding Agency: Air Force
Property Number: 18199010327
Status: Unutilized
Reasons: Isolated area; Not accessible by road; Contamination; Secured Area.

Bldg. 1055
Cap Lisburne Air Force Station
21 CSG/DEER
Elmendorf AFB Co: Anchorage AK 99506–5000
Landholding Agency: Air Force
Property Number: 18199010328
Status: Unutilized
Reasons: Isolated area; Not accessible by road; Contamination; Secured Area.

Bldg. 1056
Cap Lisburne Air Force Station
21 CSG/DEER
Elmendorf AFB Co: Anchorage AK 99506–5000
Landholding Agency: Air Force
Property Number: 18199010329
Status: Unutilized
Reasons: Isolated area; Not accessible by road; Contamination; Secured Area.

Bldg. 103
Kotzebue Air Force Station
21 CSG/DEER
Elmendorf AFB Co: Anchorage AK 99506–5000
Landholding Agency: Air Force
Property Number: 18199010330
Status: Unutilized
Reasons: Isolated area; Not accessible by road; Contamination; Secured Area.

Bldg. 104
Kotzebue Air Force Station
21 CSG/DEER
Elmendorf AFB Co: Anchorage AK 99506–5000
Landholding Agency: Air Force
Property Number: 18199010331
Status: Unutilized
Reasons: Isolated area; Not accessible by road; Contamination; Secured Area.

Bldg. 105
Kotzebue Air Force Station
21 CSG/DEER
Elmendorf AFB Co: Anchorage AK 99506–5000
Landholding Agency: Air Force
Property Number: 18199010332
Status: Unutilized
Reasons: Isolated area; Not accessible by road; Contamination; Secured Area.

Bldg. 110
Kotzebue Air Force Station
21 CSG/DEER
Elmendorf AFB Co: Anchorage AK 99506–5000
Landholding Agency: Air Force
Property Number: 18199010333
Status: Unutilized
Reasons: Isolated area; Not accessible by road; Contamination; Secured Area.

Bldg. 114
Kotzebue Air Force Station
21 CSG/DEER
Elmendorf AFB Co: Anchorage AK 99506–5000
Landholding Agency: Air Force
Property Number: 18199010334
Status: Unutilized
Reasons: Isolated area; Not accessible by road; Contamination; Secured Area.

Bldg. 202
Kotzebue Air Force Station
21 CSG/DEER
Elmendorf AFB Co: Anchorage AK 99506–5000
Landholding Agency: Air Force
Property Number: 18199010335
Status: Unutilized
Reasons: Isolated area; Not accessible by road; Contamination; Secured Area.

Bldg. 204
Kotzebue Air Force Station
21 CSG/DEER
Elmedorf AFB Co: Anchorage AK 99506–5000
Landholding Agency: Air Force
Property Number: 18199010336
Status: Unutilized
Reason: Isolated area; Not accessible by road; Contamination; Secured Area.

Bldg. 205
Kotzebue Air Force Station
21 CSG/DEER
Elmedorf AFB Co: Anchorage AK 99506–5000
Landholding Agency: Air Force
Property Number: 18199010337
Status: Unutilized
Reason: Isolated area; Not accessible by road; Contamination; Secured Area.

Bldg. 1001
Kotzebue Air Force Station
21 CSG/DEER
Elmedorf AFB Co: Anchorage AK 99506–5000
Landholding Agency: Air Force
Property Number: 18199010338
Status: Unutilized
Reason: Isolated area; Not accessible by road; Contamination; Secured Area.

Bldg. 1015
Kotzebue Air Force Station
21 CSG/DEER
Elmedorf AFB Co: Anchorage AK 99506–5000
Landholding Agency: Air Force
Property Number: 18199010339
Status: Unutilized
Reason: Isolated area; Not accessible by road; Contamination; Secured Area.

Bldg. 50
Cold Bay Air Force Station
21 CSG/DEER
Elmedorf AFB Co: Anchorage AK 99506–5000
Landholding Agency: Air Force
Property Number: 18199010433
Status: Unutilized
Reason: Isolated area; Not accessible by road; Isolated and remote; Arctic environment.

Bldg. 1548, Galena Airport
Elmendorf AFB AK 99506–4420
Landholding Agency: Air Force
Property Number: 18199420001
Status: Unutilized

Reason: Floodway; Secured Area; Extensive deterioration.

Bldg. 1568, Galena Airport
Elmedorf AFB AK 99506–4420
Landholding Agency: Air Force
Property Number: 18199420002
Status: Unutilized
Reason: Floodway; Secured Area; Extensive deterioration.

Bldg. 1570, Galena Airport
Elmedorf AFB AK 99506–4420
Landholding Agency: Air Force
Property Number: 18199420003
Status: Unutilized
Reason: Floodway; Secured Area; Extensive deterioration.

Bldg. 1700, Galena Airport
Elmedorf AFB AK 99506–4420
Landholding Agency: Air Force
Property Number: 18199420004
Status: Unutilized
Reason: Floodway; Secured Area; Extensive deterioration.

Bldg. 1832, Galena Airport
Elmendorf AFB AK 99506–4420
Landholding Agency: Air Force
Property Number: 18199420005
Status: Unutilized
Reasons: Floodway; Secured Area; Extensive deterioration.

Bldg. 1842, Galena Airport
Elmendorf AFB AK 99506–4420
Landholding Agency: Air Force
Property Number: 18199420006
Status: Unutilized
Reasons: Floodway; Secured Area; Extensive deterioration.

Bldg. 1844, Galena Airport
Elmendorf AFB AK 99506–4420
Landholding Agency: Air Force
Property Number: 18199420007
Status: Unutilized
Reasons: Floodway; Secured Area; Extensive deterioration.

Bldg. 1853, Galena Airport
Elmendorf AFB AK 99506–4420
Landholding Agency: Air Force
Property Number: 18199440011
Status: Unutilized
Reasons: Floodway; Secured Area.

Bldg. 142
Tin City Long Range Radar Site
Wales Co: Nome AK
Landholding Agency: Air Force
Property Number: 18199520013
Status: Unutilized
Reasons: Secured Area; Extensive deterioration.

Bldg. 110
Tin City Long Range Radar Site
Wales Co: Nome AK
Landholding Agency: Air Force
Property Number: 18199520014
Status: Unutilized
Reasons: Secured Area; Extensive deterioration.

Bldg. 646
King Salmon Airport
Naknek Co: Bristol Bay AK
Landholding Agency: Air Force
Property Number: 18199520015
Status: Unutilized
Reasons: Secured Area; Extensive deterioration.

Bldg. 2541
Galena Airport
Galena Co: Yukon AK
Landholding Agency: Air Force
Property Number: 18199520016
Status: Unutilized
Reasons: Secured Area; Extensive deterioration.

Bldg. 1770
Galena Airport
Galena Co: Yukon AK
Landholding Agency: Air Force
Property Number: 18199520017
Status: Unutilized
Reasons: Secured Area; Extensive deterioration.

Bldg. 1
Lonely Dewline Site
Fairbanks Co: Fairbanks NS AK
Landholding Agency: Air Force
Property Number: 18199520024
Status: Unutilized
Reasons: Extensive deterioration.

Bldg. 2
Lonely Dewline Site
Fairbanks Co: Fairbanks NS AK
Landholding Agency: Air Force
Property Number: 18199520025
Status: Unutilized
Reasons: Not accessible by road; Extensive deterioration.

Bldg. 12
Lonely Dewline Site
Fairbanks Co: Fairbanks NS AK
Landholding Agency: Air Force
Property Number: 18199520026
Status: Unutilized
Reasons: Not accessible by road; Extensive deterioration.

Bldg. 1
Wainwright Dewline Site
Fairbanks Co: Fairbanks NS AK
Landholding Agency: Air Force
Property Number: 18199520027
Status: Unutilized
Reasons: Not accessible by road; Extensive deterioration.

Bldg. 2
Wainwright Dewline Site
Fairbanks Co: Fairbanks NS AK
Landholding Agency: Air Force
Property Number: 18199520028
Status: Unutilized
Reasons: Not accessible by road; Extensive deterioration.

Bldg. 3
Wainwright Dewline Site
Fairbanks Co: Fairbanks NS AK
Landholding Agency: Air Force
Property Number: 18199520029
Status: Unutilized
Reasons: Not accessible by road; Extensive deterioration.

Bldg. 3024
Tatalina Long Range Radar Site
Elmendorf AFB AK 99506–4420
Landholding Agency: Air Force
Property Number: 18199530001
Status: Unutilized
Reasons: Secured Area; Extensive deterioration.

Bldg. 3045
Tatalina Long Range Radar Site
Elmendorf AFB AK 99506–4420
Landholding Agency: Air Force
Property Number: 1819953002
Status: Unutilized
Reasons: Secured Area; Extensive deterioration.

Bldg. 18
Lonely Dewline Site
Elmendorf AFB AK 99506–4420
Landholding Agency: Air Force
Property Number: 18199530003
Status: Unutilized
Reasons: Secured Area; Extensive deterioration.

Bldg. 23
Lonely Dewline Site
Elemendorf AFB AK 99506–4420
Landholding Agency: Air Force
Property Number: 18199530004
Status: Unutilized
Reasons: Secured Area; Extensive deterioration.

Bldg. 1015
Kotzebue Long Range Radar Site
Elemendorf AFB AK 99506–4420
Landholding Agency: Air Force
Property Number: 18199530005
Status: Unutilized
Reasons: Secured Area; Extensive deterioration.

Bldg. 1
Flaxman Island DEW Site
Elemendorf AFB AK 99506–4420
Landholding Agency: Air Force
Property Number: 18199530006
Status: Unutilized
Reasons: Secured Area; Extensive deterioration.

Bldg. 2
Flaxman Island DEW Site
Elemendorf AFB AK 99506–4420
Landholding Agency: Air Force
Property Number: 18199530007
Status: Unutilized
Reasons: Secured Area; Extensive deterioration.

Bldg. 3
Flaxman Island DEW Site
Elemendorf AFB AK 99506–4420
Landholding Agency: Air Force
Property Number: 18199530008
Status: Unutilized
Reasons: Secured Area; Extensive deterioration.

Bldg. 4100
Cape Romanzof Long Range Radar Site
Elemendorf AFB AK 99506–4420
Landholding Agency: Air Force
Property Number: 18199530009
Status: Unutilized
Reasons: Secured Area; Extensive deterioration.

Bldg. 200
Cape Newenham Long Range Radar Site
Elemendorf AFB AK 99506–4420
Landholding Agency: Air Force
Property Number: 18199530010
Status: Unutilized
Reasons: Secured Area; Extensive deterioration.

Bldg. 2166
Cape Newenham Long Range Radar Site
Elemendorf AFB AK 99506–4420
Landholding Agency: Air Force
Property Number: 18199530011

Status: Unutilized
Reasons: Extensive deterioration.

Bldg. 5500
Cape Newenham Long Range Radar Site
Elemendorf AFB AK 99506–4420
Landholding Agency: Air Force
Property Number: 18199530012
Status: Unutilized
Reasons: Secured Area; Extensive deterioration.

Bldg. 8
Barter Island
Elmendorf AFB AK 99506–4420
Landholding Agency: Air Force
Property Number 18199530013
Status: Unutilized
Reasons: Secured Area; extensive deterioration.

Bldg. 75
Barter Island
Elmendorf AFB AK 99506–4420
Landholding Agency: Air Force
Property Number 18199530014
Status: Unutilized
Reasons: Secured Area; extensive deterioration.

Bldg. 86
Barter Island
Elmendorf AFB AK 99506–4420
Landholding Agency: Air Force
Property Number 18199530015
Status: Unutilized
Reasons: Secured Area; extensive deterioration.

Bldg. 3060
Barter Island
Elmendorf AFB AK 99506–4420
Landholding Agency: Air Force
Property Number 18199530016
Status: Unutilized
Reasons: Secured Area; extensive deterioration.

Bldg. 11–330
Elmendorf Air Force Base
Anchorage AK 99506–3240
Landholding Agency: Air Force
Property Number 18199530017
Status: Unutilized
Reasons: Within airport runway clear zone; Secured Area; extensive deterioration.

Bldg. 21–870
Elmendorf Air Force Base
Anchorage AK 99506–3240
Landholding Agency: Air Force
Property Number 18199530019
Status: Unutilized
Reason: Secured Area.

Bldg. 31–342
Elmendorf Air Force Base
Anchorage AK 99506–3240
Landholding Agency: Air Force
Property Number 18199530022
Status: Unutilized
Reasons: Secured Area; extensive deterioration.

Bldg. 32–126
Elmendorf Air Force Base
Anchorage AK 99506–3240
Landholding Agency: Air Force
Property Number 18199530023
Status: Unutilized
Reasons: Within airport runway clear zone; Secured Area; extensive deterioration.

Bldg. 21–737
Elmendorf Air Force Base
Anchorage AK 99506–5000
Landholding Agency: Air Force
Property Number 18199540001
Status: Unutilized
Reasons: Secured Area; extensive deterioration.

Bldg. 52–651
Elmendorf AFB
Anchorage AK 99506–3240
Landholding Agency: Air Force
Property Number: 18199740004
Status: Unutilized
Reasons: Secured Area; Extensive deterioration.

Bldg. 132
Tin City Long Range Radar Site
Elmendorf AFB AK 99506–2270
Landholding Agency: Air Force
Property Number: 18199810003
Status: Unutilized
Reasons: Secured Area; Extensive deterioration.

Bldgs. 1001, 211
Murphy Dome AF Station
Elmendorf AFB AK 99506–2270
Landholding Agency: Air Force
Property Number: 18199810004
Status: Unutilized
Reasons: Secured Area; Extensive deterioration.

Bldg. 1551
Galena Airport
Elmendorf AFB AK 99506–2270
Landholding Agency: Air Force
Property Number: 18199810030
Status: Unutilized
Reasons: Within airport runway clear zone.

Bldg. 1771
Galena Airport
Elmendorf AFB AK 99506–2270
Landholding Agency: Air Force
Property Number: 18199820001
Status: Unutilized
Reasons: Secured Area; Extensive deterioration.

Bldg. 62–146
Elmendorf AFB
Anchorage AK 99506–3240
Landholding Agency: Air Force
Property Number: 18199830007
Status: Unutilized
Reasons: Within 2000 ft. of flammable or explosive material; Secured Area.

Bldg. 34–570
Elmendorf AFB
Anchorage AK 99506–3240
Landholding Agency: Air Force
Property Number: 18199830008
Status: Unutilized
Reasons: Within 2000 ft. of flammable or explosive material; Secured Area.

Bldg. 3
Oliktok Long Range Radar Site
Elmendorf AFB AK 99506–2270
Landholding Agency: Air Force
Property Number: 18199840010
Status: Unutilized
Reasons: Secured Area; Extensive deterioration.

Bldg. 8
Oliktok Long Range Radar Site
Elmendorf AFB AK 99506–2270
Landholding Agency: Air Force
Property Number: 18199840011
Status: Unutilized
Reasons: Secured Area; Extensive deterioration.

Bldg. 19
Lonely Short Range Radar Site
Elmendorf AFB AK 99506–2270
Landholding Agency: Air Force
Property Number: 18199840012
Status: Unutilized
Reasons: Secured Area; Extensive deterioration.

Bldg. 20
Lonely Short Range Radar Site
Elmendorf AFB AK 99506–2270
Landholding Agency: Air Force
Property Number: 18199840013
Status: Unutilized
Reasons: Secured Area; Extensive deterioration.

Bldg. 338
King Salmon Airport
Naknek Co: Bristol Bay AK
Landholding Agency: Air Force
Property Number: 18199840014
Status: Unutilized
Reasons: Secured Area; Extensive deterioration.

560
King Salmon Airport
Naknek Co: Bristol Bay AK
Landholding Agency: Air Force
Property Number: 18199840015
Status: Unutilized
Reasons: Secured Area; Extensive deterioration.

612
King Salmon Airport
Naknek Co: Bristol Bay AK
Landholding Agency: Air Force
Property Number: 18199840016
Status: Unutilized
Reasons: Secured Area; Extensive deterioration.

Bldg. 618
King Salmon Airport
Naknek Co: Bristol Bay AK
Landholding Agency: Air Force
Property Number: 18199840017
Status: Unutilized
Reasons: Secured Area; Extensive deterioration.

Bldg. 643
King Salmon Airport
Naknek Co: Bristol Bay AK
Landholding Agency: Air Force
Property Number: 18199840018
Status: Unutilized
Reasons: Secured Area; Extensive deterioration.

Bldg. 649
King Salmon Airport
Naknek Co: Bristol Bay AK
Landholding Agency: Air Force
Property Number: 18199840019
Status: Unutilized
Reasons: Secured Area; Extensive deterioration.

Bldg. 114
Indian Mountain Long Range Radar Site
Elmendorf AFB AK 99506–2270
Landholding Agency: Air Force
Property Number: 18199840020
Status: Unutilized

Reasons: Secured Area; Extensive deterioration.

Bldg. 34–636
Elmendorf AFB
Anchorage AK 99506–3240
Landholding Agency: Air Force
Property Number: 18199840021
Status: Unutilized
Reasons: Within 200 ft. of flammable or explosive material; within airport runway clear zone; secured area; extensive deterioration.

Bldg. 34–638
Elmendorf AFB
Anchorage AK 99506–3240
Landholding Agency: Air Force
Property Number: 18199840022
Status: Unutilized
Reasons: Within 2000 ft. of flammable or explosive material; within airport runway clear zone; secured area; extensive deterioration.

Bldg. 140
Cape Lisburne Long Range
Radar Site
Elmendorf AFB AK 99506–3240
Landholding Agency: Air Force
Property Number: 18199840023
Status: Unutilized
Reasons: Secured area; extensive deterioration.

Bldg. 145
Cape Lisburne Long Range
Radar Site
Elmendorf AFB AK 99506–3240
Landholding Agency: Air Force
Property Number: 18199840024
Status: Unutilized
Reasons: Secured area; extensive deterioration.

Bldg. 310
Cape Lisburne Long Range
Radar Site
Elmendorf AFB AK 99506–3240
Landholding Agency: Air Force
Property Number: 18199840025
Status: Unutilized
Reasons: Secured area; extensive deterioration.

Bldg. 27
Eareckson Air Station
Shemya Island AK
Landholding Agency: Air Force
Property Number: 18199840026
Status: Unutilized
Reasons: Secured area; extensive deterioration.

Bldg. 30
Eareckson Air Station
Shemya Island AK
Landholding Agency: Air Force
Property Number: 18199840027
Status: Unutilized
Reasons: Secured area; extensive deterioration.

Bldg. 42
Eareckson Air Station
Shemya Island AK
Landholding Agency: Air Force
Property Number: 18199840028
Status: Unutilized
Reasons: Secured area; extensive deterioration.

Bldg. 212
Eareckson Air Station
Shemya Island AK
Landholding Agency: Air Force
Property Number: 18199840029
Status: Unutilized
Reasons: Secured area; extensive deterioration.

Bldg. 213
Eareckson Air Station
Shemya Island AK
Landholding Agency: Air Force
Property Number: 18199840030
Status: Unutilized
Reasons: Secured Area; Extensive deterioration.

Bldg. 223
Eareckson Air Station
Shemya Island AK
Landholding Agency: Air Force
Property Number: 18199840031
Status: Unutilized
Reasons: Secured Area; Extensive deterioration.

Bldg. 452
Eareckson Air Station
Shemya Island AK
Landholding Agency: Air Force
Property Number: 18199840032
Status: Unutilized
Reasons: Secured Area; Extensive deterioration.

Bldg. 502
Eareckson Air Station
Shemya Island AK
Landholding Agency: Air Force
Property Number: 18199840033
Status: Unutilized
Reasons: Secured Area; Extensive deterioration.

Bldg. 503
Eareckson Air Station
Shemya Island AK
Landholding Agency: Air Force
Property Number: 18199840034
Status: Unutilized
Reasons: Secured Area; Extensive deterioration.

Bldg. 522
Eareckson Air Station
Shemya Island AK
Landholding Agency: Air Force
Property Number: 18199840035
Status: Unutilized
Reasons: Secured Area; Extensive deterioration.

Bldg. 587
Eareckson Air Station
Shemya Island AK
Landholding Agency: Air Force
Property Number: 18199840036
Status: Unutilized
Reasons: Secured Area; Extensive deterioration.

Bldg. 588
Eareckson Air Station
Shemya Island AK
Landholding Agency: Air Force
Property Number: 18199840037
Status: Unutilized
Reasons: Secured Area; Extensive deterioration.

Bldg. 598
Eareckson Air Station
Shemya Island AK
Landholding Agency: Air Force
Property Number: 18199840038
Status: Unutilized
Reasons: Secured Area; Extensive deterioration.

Bldg. 605
Eareckson Air Station
Shemya Island AK
Landholding Agency: Air Force
Property Number: 18199840039
Status: Unutilized
Reasons: Secured Area; Extensive deterioration.

Bldg. 613
Eareckson Air Station
Shemya Island AK
Landholding Agency: Air Force
Property Number: 18199840040
Status: Unutilized
Reasons: Secured Area; Extensive deterioration.

Bldg. 614
Eareckson Air Station
Shemya Island AK
Landholding Agency: Air Force
Property Number: 18199840041
Status: Unutilized
Reasons: Secured Area; Extensive deterioration.

Bldg. 615
Eareckson Air Station
Shemya Island AK
Landholding Agency: Air Force
Property Number: 18199840042
Status: Unutilized
Reasons: Secured Area; Extensive deterioration.

Bldg. 616
Eareckson Air Station
Shemya Island AK
Landholding Agency: Air Force
Property Number: 18199840043
Status: Unutilized
Reasons: Secured Area; Extensive deterioration.

Bldg. 617
Eareckson Air Station
Shemya Island AK
Landholding Agency: Air Force
Property Number: 18199840044
Status: Unutilized
Reasons: Secured Area; Extensive deterioration.

Bldg. 624
Eareckson Air Station
Shemya Island AK
Landholding Agency: Air Force
Property Number: 18199840045
Status: Unutilized
Reasons: Secured Area; Extensive deterioration.

Bldg. 700
Eareckson Air Station
Shemya Island AK
Landholding Agency: Air Force
Property Number: 18199840046
Status: Unutilized
Reasons: Secured Area; Extensive deterioration.

Bldg. 718
Eareckson Air Station
Shemya Island AK
Landholding Agency: Air Force
Property Number: 18199840047

Status: Unutilized
Reasons: Secured Area; Extensive deterioration.

Bldg. 727
Eareckson Air Station
Shemya Island AK
Landholding Agency: Air Force
Property Number: 18199840048
Status: Unutilized
Reasons: Secured Area; extensive deterioration.

Bldg. 731
Eareckson Air Station
Shemya Island AK
Landholding Agency: Air Force
Property Number: 18199840049
Status: Unutilized
Reasons: Secured Area; extensive deterioration.

Bldg. 751
Eareckson Air Station
Shemya Island AK
Landholding Agency: Air Force
Property Number: 18199840050
Status: Unutilized
Reasons: Secured Area; extensive deterioration.

Bldg. 753
Eareckson Air Station
Shemya Island AK
Landholding Agency: Air Force
Property Number: 18199840051
Status: Unutilized
Reasons: Secured Area; extensive deterioration.

Bldg. 1001
Eareckson Air Station
Shemya Island AK
Landholding Agency: Air Force
Property Number: 18199840052
Status: Unutilized
Reasons: Secured Area; extensive deterioration.

Bldg. 1005
Eareckson Air Station
Shemya Island AK
Landholding Agency: Air Force
Property Number: 18199840053
Status: Unutilized
Reasons: Secured Area; extensive deterioration.

Bldg. 1010
Eareckson Air Station
Shemya Island AK
Landholding Agency: Air Force
Property Number: 18199840054
Status: Unutilized
Reasons: Secured Area; extensive deterioration.

Bldg. 1025
Eareckson Air Station
Shemya Island AK
Landholding Agency: Air Force
Property Number: 18199840055
Status: Unutilized
Reasons: Secured Area; extensive deterioration.

Bldg. 1030
Eareckson Air Station
Shemya Island AK
Landholding Agency: Air Force
Property Number: 18199840056
Status: Unutilized
Reasons: Secured Area; extensive deterioration.

Bldg. 3016
Eareckson Air Station
Shemya Island AK
Landholding Agency: Air Force
Property Number: 18199840057
Status: Unutilized
Reasons: Secured Area; Extensive deterioration.

Bldg. 3062
Eareckson Air Station
Shemya Island AK
Landholding Agency: Air Force
Property Number: 18199840058
Status: Unutilized
Reasons: Secured Area; Extensive deterioration.

Bldg. 3063
Eareckson Air Station
Shemya Island AK
Landholding Agency: Air Force
Property Number: 18199840059
Status: Unutilized
Reasons: Secured Area; Extensive deterioration.

0.04 acre/dock
Juneau Dock Natl Guard Site
Juneau Co: AK 99801–
Landholding Agency: GSA
Property Number: 54199910010
Status: Surplus
Reasons: Within 2,000 ft. of flammable or explosive material; Extensive deterioration
GSA Number: 9–D–AK–538B.

Housing Ketchikan (0.27 Acre)
3615 Branof Avenue
Ketchikan Co: Ketchikan AK 99801–
Landholding Agency: GSA
Property Number: 87199320005
Status: Surplus
Reasons: Within 2,000 ft. of flammable or explosive material; Extensive deterioration
GSA Number: 9–U–AK–754.

Arizona

Facility 90002
Holbrook Radar Site
Holbrook Co: Navajo AZ 86025–
Landholding Agency: Air Force
Property Number: 18199340049
Status: Unutilized
Reason: Within airport runway clear zone.

Arkansas

Dwelling
Bull Shoals Lake/Dry Run Road
Oakland Co: Marion AR 72661–
Landholding Agency: DOE
Property Number: 31199820001
Status: Unutilized
Reason: Extensive deterioration.

California

Bldg. 707 63 ABG/DE
Norton Air Force Base
Norton Co: San Bernadino CA 92409–5045
Landholding Agency: Air Force
Property Number: 18199010193
Status: Excess
Reasons: Within 2,000 ft. of flammable or explosive material; Secured Area.

Bldg. 575 63 ABG/DE
Norton Air Force Base
Norton Co: San Bernadino CA 92409–5045
Landholding Agency: Air Force
Property Number: 18199010195
Status: Excess
Reason: Within 2,000 ft. of flammable or explosive material.

California

Bldg. 502 63 ABG/DE
Norton Air Force Base
Lorton Co: San Bernadino CA 92409–5045
Landholding Agency: Air Force
Property Number 18199010196
Status: Excess
Reasons: Within 2000 ft. of flammable or explosive material; secured area.

Bldg. 23 63 ABG/DE
Norton Air Force Base
Lorton Co: San Bernadino CA 92409–5045
Landholding Agency: Air Force
Property Number 18199010197
Status: Excess
Reasons: Within 2000 ft. of flammable or explosive material; secured area.

Bldg. 100
Point Arena Air Force
Station (See County) Co: Mendocino CA 95468–5000
Landholding Agency: Air Force
Property Number 181990101233
Status: Unutilized
Reason: Secured area.

Bldg. 101
Point Arena Air Force
Station (See County) Co: Mendocino CA 95468–5000
Landholding Agency: Air Force
Property Number 181990101234
Status: Unutilized
Reason: Secured Area.

Bldg. 116
Point Arena Air Force
Station (See County) Co: Mendocino CA 95468–5000
Landholding Agency: Air Force
Property Number 181990101235
Status: Unutilized
Reasons: Secured area.

Bldg. 202
Point Arena Air Force
Station (See County) Co: Mendocino CA 95468–5000
Landholding Agency: Air Force
Property Number 181990101236
Status: Unutilized
Reason: Secured area.

Bldg. 201
Vandenberg Air Force Base
Point Arguello
Vandenberg AFB Co: Santa Barbara CA 93437–
Location: Highway 1, Highway 246, Coast Road, Pt Sal Road, Miguelito Cyn.
Landholding Agency: Air Force
Property Number 18199010546
Status: Unutilized
Reason: Secured Area.

Bldg. 202
Vandenberg Air Force Base
Point Arguello
Vandenberg AFB Co: Santa Barbara CA 93437–
Location: Highway 1, Highway 246, Coast Road, Pt Sal Road, Miguelito Cyn.
Landholding Agency: Air Force
Property Number 18199010547
Status: Unutilized
Reason: Secured Area.

Bldg. 203

Vandenberg Air Force Base
Point Arguello
Vandenberg AFB Co: Santa Barbara CA 93437–
Location: Highway 1, Highway 246, Coast Road, Pt Sal Road, Miguelito Cyn.
Landholding Agency: Air Force
Property Number 18199010548
Status: Unutilized
Reason: Secured Area.

Bldg. 204
Vanderberg Air Force Base
Point Arguello
Vandenberg AFB Co: Santa Barbara CA 93437–
Location: Highway 1, Highway 246, Coast Road, Pt Sal Road, Miguelito Cyn.
Landholding Agency: Air Force
Property Number: 18199010549
Status: Unutilized
Reason: Secured Area.

Bldg. 1823
Vanderberg Air Force Base
Vandenberg AFB Co: Santa Barbara CA 93437–
Location: Highway 1, Highway 246, Coast Road, Pt Sal Road, Miguelito Cyn.
Landholding Agency: Air Force
Property Number: 18199130360
Status: Excess
Reason: Within 2000 ft. of flammable or explosive material; Secured Area.

Bldg. 10312
Vanderberg Air Force Base
Vandenberg AFB Co: Santa Barbara CA 93437–
Landholding Agency: Air Force
Property Number: 18199210026
Status: Unutilized
Reason: Secured Area.

Bldg. 10503
Vanderberg Air Force Base
Vandenberg AFB Co: Santa Barbara CA 93437–
Landholding Agency: Air Force
Property Number: 18199210028
Status: Unutilized
Reason: Secured Area.

Bldg. 16104, Vandenberg AFB
Vandenberg AFB Co: Santa Barbara CA 93437–
Location: Hwy 1, Hwy 246; Coast Rd., Pt Sal Rd.; Miguelito Cyn
Landholding Agency: Air Force
Property Number: 18199230020
Status: Underutilized
Reason: Secured Area.

Bldg. 5428, Vandenberg AFB
Vandenberg AFB Co: Santa Barbara CA 93437–
Landholding Agency: Air Force
Property Number: 18199310015
Status: Unutilized
Reason: Secured Area.

Bldg. 7304, Vandenberg AFB
Vandenberg AFB Co: Santa Barbara CA 93437–
Landholding Agency: Air Force
Property Number: 18199310030
Status: Unutilized
Reason: Secured Area.

Bldg. 8215
Vanderberg Air Force Base
Vandenberg AFB Co: Santa Barbara CA 93437–
Landholding Agency: Air Force
Property Number: 18199330016
Status: Unutilized
Reason: Secured Area.

Bldg. 1988
Vanderberg Air Force Base
Vandenberg AFB Co: Santa Barbara CA 93347–
Landholding Agency: Air Force
Property Number: 18199340003
Status: Unutilized
Reason: Electrical Power Generator Bldg.; Secured Area.

Bldg. 1324
Vandenberg Air Force Base
Vandenberg AFB Co: Santa Barbara CA 93437–
Landholding Agency: Air Force
Property Number: 18199340006
Status: Unutilized
Reason: Secured Area.

Bldg. 1341
Vandenberg Air Force Base
Vandenberg AFB Co: Santa Barbara CA 93437–
Landholding Agency: Air Force
Property Number: 18199340007
Status: Unutilized
Reason: Secured Area.

Bldg. 1955
Vandenberg Air Force Base
Vandenberg AFB Co: Santa Barbara CA 93437–
Landholding Agency: Air Force
Property Number: 18199340008
Status: Unutilized
Reason: Secured Area.

Bldg. 6443
Vandenberg Air Force Base
Vandenberg AFB Co: Santa Barbara CA 93437–
Landholding Agency: Air Force
Property Number: 18199340020
Status: Unutilized
Reason: Secured Area.

Bldg. 7306
Vandenberg Air Force Base
Vandenberg AFB Co: Santa Barbara CA 93437–
Landholding Agency: Air Force
Property Number: 18199340022
Status: Unutilized
Reason: Secured Area.

Bldg. 16164
Vandenberg Air Force Base
Vandenberg AFB Co: Santa Barbara CA 93437–
Landholding Agency: Air Force
Property Number: 18199340028
Status: Unutilized
Reason: Secured Area.

Bldg. 6521
Vandenberg Air Force Base
Vandenberg AFB Co: Santa Barbara CA 93437–
Landholding Agency: Air Force
Property Number: 18199410004
Status: Unutilized
Reason: Secured Area.

Bldg. 908
Vandenberg Air Force Base
Vandenberg AFB Co: Santa Barbara CA 93437–
Landholding Agency: Air Force
Property Number: 18199520018
Status: Excess
Reason: Detached Latrine.

Bldg. 13004
Vandenberg Air Force Base
Vandenberg AFB Co: Santa Barbara CA 93437–
Landholding Agency: Air Force
Property Number: 18199520022
Status: Excess
Reasons: Secured Area; Extensive deterioration.

Bldg. 422
Vandenberg Air Force Base
Vandenberg AFB Co: Santa Barbara CA 93437–
Landholding Agency: Air Force
Property Number: 18199530029
Status: Unutilized
Reasons: Secured Area; extensive deterioration.

Bldg. 431
Vandenberg Air Force Base
Vandenberg AFB Co: Santa Barbara CA 93437–
Landholding Agency: Air Force
Property Number: 18199530030
Status: Unutilized
Reasons: Secured Area; extensive deterioration.

Bldg. 470
Vandenberg Air Force Base
Vandenberg AFB Co: Santa Barbara CA 93437–
Landholding Agency: Air Force
Property Number: 18199530031
Status: Unutilized
Reasons: Secured Area; extensive deterioration.

Bldg. 480
Vandenberg Air Force Base
Vandenberg AFB Co: Santa Barbara CA 93437–
Landholding Agency: Air Force
Property Number: 18199530032
Status: Unutilized
Reasons: Secured Area; extensive deterioration.

Bldg. 6011
Vandenberg Air Force Base
Vandenberg AFB Co: Santa Barbara CA 93437–
Landholding Agency: Air Force
Property Number: 18199530035
Status: Unutilized
Reasons: Secured Area; extensive deterioration.

Bldg. 6606
Vandenberg Air Force Base
Vandenberg AFB Co: Santa Barbara CA 93437–
Landholding Agency: Air Force
Property Number: 18199530037
Status: Unutilized
Reasons: Secured Area; extensive deterioration.

Bldg. 7307
Vandenberg Air Force Base
Vandenberg AFB Co: Santa Barbara CA 93437–
Landholding Agency: Air Force
Property Number: 18199530039
Status: Unutilized
Reasons: Secured Area; extensive deterioration.

Bldg. 10717
Vandenberg Air Force Base
Vandenberg AFB Co: Santa Barbara CA 93437–
Landholding Agency: Air Force
Property Number: 18199530041
Status: Unutilized
Reasons: Secured Area; extensive deterioration.

Bldg. 10722
Vandenberg Air Force Base
Vandenberg AFB Co: Santa Barbara CA 93437–
Landholding Agency: Air Force
Property Number: 18199530043
Status: Unutilized
Reasons: Secured Area; extensive deterioration.

Bldg. 13213
Vandenberg Air Force Base
Vandenberg AFB Co: Santa Barbara CA 93437–
Landholding Agency: Air Force
Property Number: 18199530044
Status: Unutilized
Reasons: Secured Area; Extensive deterioration.

Bldg. 13215
Vandenberg Air Force Base
Vandenberg AFB Co: Santa Barbara CA 93437–
Landholding Agency: Air Force
Property Number: 18199530045
Status: Unutilized
Reasons: Secured Area; Extensive deterioration.

Bldg. 893
Vandenberg AFB
Vandenberg AFB Co: Santa Barbara CA 93437–
Landholding Agency: Air Force
Property Number: 18199620028
Status: Unutilized
Reasons: Secured Area; Extensive deterioration.

Bldg. 9350
Vandenberg AFB
Vandenberg AFB Co: Santa Barbara CA 93437–
Landholding Agency: Air Force
Property Number: 18199620030
Status: Unutilized
Reasons: Secured Area; Extensive deterioration.

Bldg. 13003
Vandenberg AFB
Vandenberg AFB Co: Santa Barbara CA 93437–
Landholding Agency: Air Force
Property Number: 18199620031
Status: Unutilized
Reasons: Secured Area; Extensive deterioration.

Bldg. 13222
Vandenberg AFB
Vandenberg AFB Co: Santa Barbara CA 93437–
Landholding Agency: Air Force
Property Number: 18199620032
Status: Unutilized
Reasons: Secured Area; Extensive deterioration.

Bldg. 815
Vandenberg AFB
Vandenberg AFB Co: Santa Barbara CA 93437–
Landholding Agency: Air Force
Property Number: 18199630040
Status: Unutilized
Reasons: Secured Area; Extensive deterioration.

Bldg. 1850
Vandenberg AFB
Vandenberg AFB Co: Santa Barbara CA 93437–
Landholding Agency: Air Force
Property Number: 18199630041
Status: Unutilized
Reasons: Secured Area; Extensive deterioration.

Bldg. 1853
Vandenberg AFB
Vandenberg AFB Co: Santa Barbara CA 93437–
Landholding Agency: Air Force
Property Number: 18199630042
Status: Unutilized
Reasons: Secured Area; Extensive deterioration.

Bldg. 1856
Vandenberg AFB
Vandenberg AFB Co: Santa Barbara CA 93437–
Landholding Agency: Air Force
Property Number: 18199630043
Status: Unutilized
Reasons: Secured Area; Extensive deterioration.

Bldg. 1865
Vandenberg AFB
Vandenberg AFB Co: Santa Barbara CA 93437–
Landholding Agency: Air Force
Property Number: 18199630044
Status: Unutilized
Reasons: Secured Area; Extensive deterioration.

Bldg. 1874
Vandenberg AFB
Vandenberg AFB Co: Santa Barbara CA 93437–
Landholding Agency: Air Force
Property Number: 18199630045
Status: Unutilized
Reasons: Secured Area; Extensive deterioration.

Bldg. 1875
Vandenberg AFB
Vandenberg AFB Co: Santa Barbara CA 93437–
Landholding Agency: Air Force
Property Number: 18199630046
Status: Unutilized
Reasons: Secured Area; Extensive deterioration.

Bldg. 1877
Vandenberg AFB
Vandenberg AFB Co: Santa Barbara CA 93437–
Landholding Agency: Air Force
Property Number: 18199630047
Status: Unutilized
Reasons: Secured Area; Extensive deterioration.

Bldg. 1879
Vandenberg AFB
Vandenberg AFB Co: Santa Barbara CA 93437–
Landholding Agency: Air Force
Property Number: 18199630048
Status: Unutilized
Reasons: Secured Area; Extensive deterioration.

Bldg. 1885
Vandenberg AFB
Vandenberg AFB Co: Santa Barbara CA 93437–
Landholding Agency: Air Force
Property Number: 18199630049
Status: Unutilized
Reasons: Secured Area; Extensive deterioration.

Bldg. 1898
Vandenberg AFB
Vandenberg AFB Co: Santa Barbara CA 93437–
Landholding Agency: Air Force
Property Number: 18199630050
Status: Unutilized
Reasons: Secured Area; Extensive deterioration.

Bldg. 06445
Vandenberg AFB
Vandenberg AFB Co: Santa Barbara CA 93437–
Landholding Agency: Air Force
Property Number: 18199630052
Status: Unutilized
Reasons: Secured Area; Extensive deterioration.

Bldg. 21160
Vandenberg AFB
Vandenberg AFB Co: Santa Barbara CA 93437–
Landholding Agency: Air Force
Property Number: 18199630055
Status: Unutilized
Reasons: Secured Area; Extensive deterioration.

Bldg. 00350
Vandenberg Air Force Base
Vandenberg AFB Co: Santa Barbara CA 93437–
Landholding Agency: Air Force
Property Number: 18199630058
Status: Unutilized
Reasons: Secured Area; Extensive deterioration.

Bldg. 06437
Vandenberg Air Force Base
Vandenberg AFB Co: Santa Barbara CA 93437–
Landholding Agency: Air Force
Property Number: 18199710014
Status: Unutilized
Reasons: Secured Area; Extensive deterioration.

Bldg. 10715
Vandenberg Air Force Base
Vandenberg AFB Co: Santa Barbara CA 93437–
Landholding Agency: Air Force
Property Number: 18199710016
Status: Unutilized
Reasons: Secured Area; Extensive deterioration.

Bldg. 13607
Vandenberg Air Force Base
Vandenberg AFB Co: Santa Barbara CA 93437–
Landholding Agency: Air Force
Property Number: 18199710019

Status: Unutilized
Reasons: Secured Area; Extensive deterioration.

Bldg. 21300
Vandenberg Air Force Base
Vandenberg AFB Co: Santa Barbara CA 93437–
Landholding Agency: Air Force
Property Number: 18199710020
Status: Unutilized
Reasons: Secured Area; Extensive deterioration.

Bldg. 00530
Vandenberg AFB
Vandenberg AFB Co: Santa Barbara CA 93437–
Landholding Agency: Air Force
Property Number: 18199720007
Status: Unutilized
Reasons: Secured Area; Extensive deterioration.

Bldg. 00835
Vandenberg AFB
Vandenberg AFB Co: Santa Barbara CA 93437–
Landholding Agency: Air Force
Property Number: 18199720008
Status: Unutilized
Reasons: Secured Area; Extensive deterioration.

Bldg. 00879
Vandenberg AFB
Vandenberg AFB Co: Santa Barbara CA 93437–
Landholding Agency: Air Force
Property Number: 18199720009
Status: Unutilized
Reasons: Secured Area; Extensive deterioration.

Bldg. 1028
Vandenberg AFB
Vandenberg AFB Co: Santa Barbara CA 93437–
Landholding Agency: Air Force
Property Number: 18199720010
Status: Unutilized
Reasons: Secured Area; Extensive deterioration.

Bldg. 01630
Vandenberg AFB
Vandenberg AFB Co: Santa Barbara CA 93437–
Landholding Agency: Air Force
Property Number: 18199720011
Status: Unutilized
Reasons: Secured Area; Extensive deterioration.

Bldg. 01797
Vandenberg AFB
Vandenberg AFB Co: Santa Barbara CA 93437–
Landholding Agency: Air Force
Property Number: 18199720012
Status: Unutilized
Reasons: Secured Area; Extensive deterioration.

Bldg. 01830
Vandenberg AFB
Vandenberg AFB Co: Santa Barbara CA 93437–
Landholding Agency: Air Force
Property Number: 18199720013
Status: Unutilized
Reasons: Secured Area; Extensive deterioration.

Bldg. 01852
Vandenberg AFB
Vandenberg AFB Co: Santa Barbara CA 93437–
Landholding Agency: Air Force
Property Number: 18199720014
Status: Unutilized
Reasons: Secured Area; Extensive deterioration.

Bldg. 10003
Vandenberg AFB
Vandenberg AFB Co: Santa Barbara CA 93437–
Landholding Agency: Air Force
Property Number: 18199720016
Status: Unutilized
Reasons: Secured Area; Extensive deterioration.

Bldg. 10252
Vandenberg AFB
Vandenberg AFB Co: Santa Barbara CA 93437–
Landholding Agency: Air Force
Property Number: 18199720017
Status: Unutilized
Reasons: Secured Area; Extensive deterioration.

Bldg. 11345
Vandenberg AFB
Vandenberg AFB Co: Santa Barbara CA 93437–
Landholding Agency: Air Force
Property Number: 18199720019
Status: Unutilized
Reasons: Secured Area; Extensive deterioration.

Bldg. 13600
Vandenberg AFB
Vandenberg AFB Co: Santa Barbara CA 93437–
Landholding Agency: Air Force
Property Number: 18199720021
Status: Unutilized
Reasons: Secured Area; Extensive deterioration.

Bldg. 14019
Vandenberg AFB
Vandenberg AFB Co: Santa Barbara CA 93437–
Landholding Agency: Air Force
Property Number: 18199720022
Status: Unutilized
Reasons: Secured Area; Extensive deterioration.

Bldg. 14026
Vandenberg AFB
Vandenberg AFB Co: Santa Barbara CA 93437–
Landholding Agency: Air Force
Property Number: 18199720023
Status: Unutilized
Reasons: Secured Area; Extensive deterioration.

Bldg. 16162
Vandenberg AFB
Vandenberg AFB Co: Santa Barbara CA 93437–
Landholding Agency: Air Force
Property Number: 18199720024
Status: Unutilized
Reasons: Secured Area; Extensive deterioration.

Bldg. 22300
Vandenberg AFB
Vandenberg AFB Co: Santa Barbara CA 93437–
Landholding Agency: Air Force
Property Number: 18199730002
Status: Unutilized
Reasons: Secured Area; Extensive deterioration.

Bldg. 01310
Vandenberg AFB
Vandenberg AFB Co: Santa Barbara CA 93437–
Landholding Agency: Air Force
Property Number: 18199740005
Status: Unutilized
Reason: Secured Area.

Bldg. 08412
Vandenberg AFB
Vandenberg AFB Co: Santa Barbara CA 93437–
Landholding Agency: Air Force
Property Number: 18199740006
Status: Unutilized
Reason: Secured Area.

Bldg. 11153
Vandenberg AFB
Vandenberg AFB Co: Santa Barbara CA 93437–
Landholding Agency: Air Force
Property Number: 18199740007
Status: Unutilized
Reason: Secured Area.

Bldg. 11154
Vandenberg AFB
Vandenberg AFB Co: Santa Barbara CA 93437–
Landholding Agency: Air Force
Property Number: 18199740008
Status: Unutilized
Reasons: Secured Area; Extensive deterioration.

Bldgs. 2–11, 20–21
Edwards AFB
P-Area Housing
Edwards AFB Co: Kern CA 93524–
Landholding Agency: Air Force
Property Number: 18199810029
Status: Unutilized
Reason: Extensive deterioration.

Bldg. 0097
Vandenberg AFB
Co: Santa Barbara CA 93437–
Landholding Agency: Air Force
Property Number: 18199820002
Status: Unutilized
Reasons: Secured Area; Extensive deterioration.

Bldg. 1681
Vandenberg AFB
Co: Santa Barbara CA 93437–
Landholding Agency: Air Force
Property Number: 18199820003
Status: Unutilized
Reasons: Secured Area; Extensive deterioration.

Bldg. 01839
Vandenberg AFB
Co: Santa Barbara CA 93437–
Landholding Agency: Air Force
Property Number: 18199820004
Status: Unutilized
Reasons: Secured Area; Extensive deterioration.

Bldg. 06519
Vandenberg AFB

Co: Santa Barbara CA 93437–
Landholding Agency: Air Force
Property Number: 18199820005
Status: Unutilized
Reasons: Secured Area; Extensive deterioration.

Bldg. 06526
Vandenberg AFB
Co: Santa Barbara CA 93437–
Landholding Agency: Air Force
Property Number: 18199820006
Status: Unutilized
Reasons: Secured Area; Extensive deterioration.

Bldg. 11167
Vandenberg AFB
Co: Santa Barbara CA 93437–
Landholding Agency: Air Force
Property Number: 18199820007
Status: Unutilized
Reasons: Secured Area; Extensive deterioration.

Bldg. 11168
Vandenberg AFB
Co: Santa Barbara CA 93437–
Landholding Agency: Air Force
Property Number: 18199820008
Status: Unutilized
Reasons: Secured Area; Extensive deterioration.

Colorado

Bldg. 00910
''Blue Barn''—Falcon Air Force Base
Falcon Co: El Paso CO 80912–
Landholding Agency: Air Force
Property Number: 18199530046
Status: Underutilized
Reasons: Secured Area.

Bldg. 1007
U.S. Air Force Academy
Colorado Springs Co: El Paso CO 80814–2400
Landholding Agency: Air Force
Property Number: 18199730003
Status: Underutilized
Reasons: Within 2000 ft. of flammable or explosive material; Secured Area; Extensive deterioration.

Bldg. 1008
U.S. Air Force Academy
Colorado Springs Co: El Paso Co 80814–2400
Landholding Agency: Air Force
Property Number 18199730004
Status: Underutilized
Reasons: Within 2000 ft. of flammable or explosive material; secured area; extensive deterioration.

Bldg. 9214
U.S. Air Force Academy
Colorado Springs Co: El Paso Co 80814–2400
Landholding Agency: Air Force
Property Number 18199730012
Status: Underutilized
Reasons: Within airport runway clear zone; secured area.

Bldg. 7067
USAF Academy
Co: El Paso Co 80840–
Landholding Agency: Air Force
Property Number 18199810005
Status: Unutilized
Reason: Extensive deterioration.

Bldg. 8222
USAF Academy
Co: El Paso Co 80840–
Landholding Agency: Air Force
Property Number 18199810006
Status: Unutilized
Reason: Extensive deterioration.

Bldg. 9200
USAF Academy
Co: El Paso Co 80840–
Landholding Agency: Air Force
Property Number 18199810007
Status: Unutilized
Reasons: Within airport runway clear zone; secured area.

Connecticut

Bldg. 13
Bradley International Airport
East Granby Co: Hartford CT 06026–9309
Landholding Agency: Air Force
Property Number 18199640002
Status: Unutilized
Reasons: Within 2000 ft. of flammable or explosive material; secured area.

Bldg. 10
Bradley International Airport
East Granby Co: Hartford CT 06026–9309
Landholding Agency: Air Force
Property Number 18199640003
Status: Unutilized
Reasons: Within 2000 ft. of flammable or explosive material; secured area.

Bldg. 5
Bradley International Airport
East Granby Co: Hartford CT 06026–9309
Landholding Agency: Air Force
Property Number 18199640004
Status: Unutilized
Reason: Within 2000 ft. of flammable or explosive material.

Bldg. 4
Bradley International Airport
East Granby Co: Hartford CT 06026–9309
Landholding Agency: Air Force
Property Number 18199640005
Status: Unutilized
Reason: Within 2000 ft. of flammable or explosive material.

Hezekiah S. Ramsdell Farm
West Thompson Lake
North Grosvenordale Co: Windham CT 06255–9801
Landholding Agency: COE
Property Number: 31199740001
Status: Unutilized
Reasons: Floodway; Extensive deterioration.

Delaware

Delaware Breakwater Light
Lewes Co: Sussex DE 19958–
Landholding Agency: GSA
Property Number: 54199640007
Status: Excess
Reasons: Inaccessible.
GSA Number: 4–U–DE–460

Mispillion River Light
Milford Co: Sussex DE 19963–
Landholding Agency: GSA
Property Number: 54199740001
Status: Excess
Reason: Extensive deterioration.
GSA Number: 4–U–DE–461.

Florida

Bldg. 1179
Patrick Air Force Base
1179 School Avenue
Co: Brevard FL 32935–
Landholding Agency: Air Force
Property Number: 18199240030
Status: Unutilized
Reasons: Extensive Deterioration; Secured Area.

Bldg. 575
Patrick Air Force Base
Co: Brevard FL 32925–
Landholding Agency: Air Force
Property Number: 18199320004
Status: Unutilized
Reasons: Within 2,000 ft. of flammable or explosive material; Within airport runway clear zone; Extensive Deterioration; Secured Area.

Facility 90523
Cape Canaveral AFS
Cape Canaveral AFS Co: Brevard FL
Landholding Agency: Air Force
Property Number: 18199330001
Status: Underutilized
Reason: Secured Area.

Bldg. 921
Patrick Air Force Base
Co: Brevard FL 32925–
Landholding Agency: Air Force
Property Number: 18199430002
Status: Unutilized
Reasons: Within 2,000 ft. of flammable or explosive material; Secured Area.

23 Family Housing
MacDill Auxiliary Airfield
No. 1
Avon Park Co: Polk FL 33825–
Location: Include Bldgs: 448, 451 thru 470, 472 and 474
Landholding Agency: Air Force
Property Number: 18199520006
Status: Excess
Reason: Within airport runway clear zone.

Bldg. 240
MacDill Auxiliary Airfield No. 1
Avon Park Co: Polk FL 33825–
Landholding Agency: Air Force
Property Number: 18199520007
Status: Excess
Reason: Extensive deterioration.

Bldg. 243
Elgin Air Force Base
Elgin AFB Co: Okaloosa FL 32542–5000
Landholding Agency: Air Force
Property Number: 18199540002
Status: Unutilized
Reasons: Secured Area; Extensive deterioration.

Bldg. 510
Elgin Air Force Base
Elgin AFB Co: Okaloosa FL 32542–5000
Landholding Agency: Air Force
Property Number: 18199540003
Status: Unutilized
Reasons: Secured Area; Extensive deterioration.

Bldg. 521
Elgin Air Force Base
Elgin AFB Co: Okaloosa FL 32542–5000
Landholding Agency: Air Force
Property Number: 18199540004
Status: Unutilized
Reasons: Secured Area; Extensive deterioration.

Bldg. 872
Elgin Air Force Base

Elgin AFB Co: Okaloosa FL 32542–5000
Landholding Agency: Air Force
Property Number: 18199540005
Status: Unutilized
Reasons: Secured Area; Extensive deterioration.

Bldg. 30004
Elgin Air Force Base
Elgin AFB Co: Okaloosa FL 32542–5000
Landholding Agency: Air Force
Property Number: 18199540006
Status: Unutilized
Reasons: Secured Area; Extensive deterioration.

Bldg. 12513
Elgin Air Force Base
Elgin AFB Co: Okaloosa FL 32542–5000
Landholding Agency: Air Force
Property Number: 18199540007
Status: Unutilized
Reasons: Secured Area; Extensive deterioration.

Facility 36901
Cape Canaveral Air Station
Cape Canaveral Co: Brevard FL 32925–
Landholding Agency: Air Force
Property Number: 18199640006
Status: Unutilized
Reasons: Secured Area; Extensive deterioration.

Facility 8816
Cape Canaveral Air Station
Cape Canaveral Co: Brevard FL 32925–
Landholding Agency: Air Force
Property Number: 18199640007
Status: Unutilized
Reasons: Within 2000 ft. of flammable or explosive material; Secured Area.

Bldg. 12734, Elgin AFB
Elgin AFB Co: Okaloosa FL 32542–5133
Landholding Agency: Air Force
Property Number: 18199640011
Status: Unutilized
Reason: Secured Area.

Bldg. 12708, Eglin AFB
Eglin AFB Co: Okaloosa FL 32542–5133
Landholding Agency: Air Force
Property Number: 18199640012
Status: Unutilized
Reasons: Secured Area; Extensive deterioration.

Bldg. 307
Patrick Air Force Base
Patrick AFB Co: Brevard FL
Landholding Agency: Air Force
Property Number: 18199710022
Status: Unutilized
Reason: Secured Area.

Bldg. 315
Patrick Air Force Base
Patrick AFB Co: Brevard FL
Landholding Agency: Air Force
Property Number: 18199710023
Status: Unutilized
Reason: Secured Area.

Bldg. 317
Patrick Air Force Base
Patrick AFB Co: Brevard FL
Landholding Agency: Air Force
Property Number: 18199710024
Status: Unutilized
Reasons: Secured Area; Extensive deterioration.

Bldg. 318
Patrick Air Force Base
Patrick AFB Co: Brevard FL
Landholding Agency: Air Force
Property Number: 18199710025
Status: Unutilized
Reasons: Secured Area; Extensive deterioration.

Bldg. 324
Patrick Air Force Base
Patrick AFB Co: Brevard FL
Landholding Agency: Air Force
Property Number: 18199710026
Status: Unutilized
Reasons: Secured Area; Extensive deterioration.

Facility No. 1114
Cape Canaveral Air Station
Cape Canaveral AS Co: Brevard FL 32925–
Landholding Agency: Air Force
Property Number: 18199710027
Status: Unutilized
Reasons: Secured Area; Extensive deterioration.

Facility No. 1345
Cape Canaveral Air Station
Cape Canaveral AS Co: Brevard FL 32925–
Landholding Agency: Air Force
Property Number: 18199710028
Status: Unutilized
Reason: Secured Area.

Facility No. 1346
Cape Canaveral Air Station
Cape Canaveral AS Co: Brevard FL 32925–
Landholding Agency: Air Force
Property Number: 18199710029
Status: Unutilized
Reason: Secured Area.

Facility No. 1348
Cape Canaveral Air Station
Cape Canaveral AS Co: Brevard FL 32925–
Landholding Agency: Air Force
Property Number: 18199710030
Status: Unutilized
Reason: Secured Area.

Facility No. 7805
Cape Canaveral Air Station
Cape Canaveral AS Co: Brevard FL 32925–
Landholding Agency: Air Force
Property Number: 18199710031
Status: Unutilized
Reason: Secured Area.

Facility No. 7850
Cape Canaveral Air Station
Cape Canaveral AS Co: Brevard FL 32925–
Landholding Agency: Air Force
Property Number: 18199710032
Status: Unutilized
Reason: Secured Area.

Facility No. 10831
Cape Canaveral Air Station
Cape Canaveral AS Co: Brevard FL 32925–
Landholding Agency: Air Force
Property Number: 18199710033
Status: Unutilized
Reason: Secured Area.

Facility No. 15500
Cape Canaveral Air Station
Cape Canaveral AS Co: Brevard FL 32925–
Landholding Agency: Air Force
Property Number: 18199710034
Status: Unutilized
Reasons: Secured Area; Extensive deterioration.

Facility No. 39764
Cape Canaveral Air Station
Cape Canaveral AS Co: Brevard FL 32925–
Landholding Agency: Air Force
Property Number: 18199710035
Status: Unutilized
Reason: Secured Area.

Facility No. 70580
Cape Canaveral Air Station
Cape Canaveral AS Co: Brevard FL 32925–
Landholding Agency: Air Force
Property Number: 18199710036
Status: Unutilized
Reasons: Secured Area; Extensive deterioration.

Facility No. 70662
Cape Canaveral Air Station
Cape Canaveral AS Co: Brevard FL 32925–
Landholding Agency: Air Force
Property Number: 18199710037
Status: Unutilized
Reasons: Secured Area; Extensive deterioration.

Facility No. 72920
Cape Canaveral Air Station
Cape Canaveral AS Co: Brevard FL 32925–
Landholding Agency: Air Force
Property Number: 18199710038
Status: Unutilized
Reason: Secured Area.

Bldg 897, Eglin AFB
Eglin AFB Co: Okaloosa FL 32542–5133
Landholding Agency: Air Force
Property Number: 18199710044
Status: Unutilized
Reason: Extensive deterioration.

Bldg 895, Eglin AFB
Eglin AFB Co: Okaloosa FL 32542–5133
Landholding Agency: Air Force
Property Number: 18199710045
Status: Unutilized
Reason: Extensive deterioration.

Facility No. 90520
Cape Canaveral AS
Cape Canaveral Co: Brevard FL 32925–
Landholding Agency: Air Force
Property Number: 18199720038
Status: Underutilized
Reason: Secure Area.

Bldg. 312, Patrick AFB
Co: Brevard FL 32925–
Landholding Agency: Air Force
Property Number: 18199720039
Status: Unutilized
Reasons: Secured Area; Extensive deterioration.

Bldg 10686
Eglin AFB
Eglin AFB Co: Okaloosa FL 32542–5133
Landholding Agency: Air Force
Property Number: 18199740001
Status: Unutilized
Reasons: Secured Area; Extensive deterioration.

Bldg 10563
Eglin AFB
Eglin AFB Co: Okaloosa FL 32542–5133
Landholding Agency: Air Force
Property Number: 18199740002
Status: Unutilized
Reasons: Secured Area; Extensive deterioration.

Bldg 10352
Eglin AFB
Eglin AFB Co: Okaloosa FL 32542–5133

Landholding Agency: Air Force
Property Number: 18199740003
Status: Unutilized
Reasons: Secured Area; Extensive deterioration.

Fac. No. 09010
Cape Canaveral Air Station
Cape Canaveral Co: Brevard FL 32925–
Landholding Agency: Air Force
Property Number: 18199810008
Status: Unutilized
Reason: Secured Area.

Fac. No. 15832
Cape Canaveral Air Station
Cape Canaveral Co: Brevard FL 32925–
Landholding Agency: Air Force
Property Number: 18199810009
Status: Unutilized
Reason: Secured Area.

Bldg. 744
Elgin AFB
Co: Okaloosa FL 32542–5133
Landholding Agency: Air Force
Property Number: 18199820009
Status: Unutilized
Reasons: Secured Area; Extensive deterioration.

Bldg. 3008
Elgin AFB
Co: Okaloosa FL 32542–5133
Landholding Agency: Air Force
Property Number: 18199820010
Status: Unutilized
Reasons: Secured Area; Extensive deterioration.

Bldg. 3010
Elgin AFB
Co: Okaloosa FL 32542–5133
Landholding Agency: Air Force
Property Number: 18199820011
Status: Unutilized
Reasons: Secured Area; Extensive deterioration.

Bldg. 12709
Elgin AFB
Co: Okaloosa FL 32542–5133
Landholding Agency: Air Force
Property Number: 18199820012
Status: Unutilized
Reasons: Secured Area; Extensive deterioration.

Bldg. 08807
Cape Canaveral Air Station
Co: Brevard FL 32925–
Landholding Agency: Air Force
Property Number: 18199820013
Status: Unutilized
Reason: Secured Area.

Bldg. 08809
Cape Canaveral Air Station
Co: Brevard FL 32925–
Landholding Agency: Air Force
Property Number: 18199820014
Status: Unutilized
Reasons: Secured Area; Extensive deterioration.

Bldg. 21911
Cape Canaveral Air Station
Co: Brevard FL 32925–
Landholding Agency: Air Force
Property Number: 18199820015
Status: Unutilized
Reasons: Secured Area; Extensive deterioration.

Bldg. 21914
Cape Canaveral Air Station
Co: Brevard FL 32925–
Landholding Agency: Air Force
Property Number: 18199820016
Status: Unutilized
Reasons: Secured Area; Extensive deterioration.

Bldg. 32349
Cape Canaveral Air Station
Co: Brevard FL 32925–
Landholding Agency: Air Force
Property Number: 18199820017
Status: Unutilized
Reasons: Secured Area; Extensive deterioration.

Facility 22
Malabar Transmitter Annex
Plam Bay Co: Brevard FL 32907–
Landholding Agency: Air Force
Property Number: 18199830001
Status: Unutilized
Reason: Secured Area.

Facility 27
Malabar Transmitter Annex
Plam Bay Co: Brevard FL 32907–
Landholding Agency: Air Force
Property Number: 18199830002
Status: Unutilized
Reason: Secured Area.

Facility 32
Malabar Transmitter Annex
Plam Bay Co: Brevard FL 32907–
Landholding Agency: Air Force
Property Number: 18199830003
Status: Unutilized
Reason: Secured Area.

Facility 36
Malabar Transmitter Annex
Plam Bay Co: Brevard FL 32907–
Landholding Agency: Air Force
Property Number: 18199830004
Status: Unutilized
Reason: Secured Area.

Facility 42
Malabar Transmitter Annex
Plam Bay Co: Brevard FL 32907–
Landholding Agency: Air Force
Property Number: 18199830005
Status: Unutilized
Reason: Secured Area.

Facility 44608
Cape Canaveral Air Station
Co: Brevard FL 32925–
Landholding Agency: Air Force
Property Number: 18199830006
Status: Unutilized
Reasons: Within 2000 ft. of flammable or explosive material; Secured Area.

Bldg. 12577
Eglin AFB
Santa Rosa Island
Okaloosa Co: FL 32542–5133
Landholding Agency: Air Force
Property Number: 18199910001
Status: Unutilized
Reasons: Floodway; Secured Area; Extensive deterioration.

Bldg. 12576
Eglin AFB
Santa Rosa Island
Okaloosa Co: FL 32542–5133
Landholding Agency: Air Force
Property Number: 18199910002
Status: Unutilized
Reasons: Floodway; Secured Area; Extensive deterioration.

Bldg. 12534
Eglin AFB
Santa Rosa Island
Okaloosa Co: FL 32542–5133
Landholding Agency: Air Force
Property Number: 18199910003
Status: Unutilized
Reasons: Floodway; Secured Area; Extensive deterioration.

Bldg. 12533
Eglin AFB
Santa Rosa Island
Okaloosa Co: FL 32542–5133
Landholding Agency: Air Force
Property Number: 18199910004
Status: Unutilized
Reasons: Floodway; Secured Area; Extensive deterioration.

Bldg. 12528
Eglin AFB
Santa Rosa Island
Okaloosa Co: FL 32542–5133
Landholding Agency: Air Force
Property Number: 18199910005
Status: Unutilized
Reasons: Floodway; Secured Area; Extensive deterioration.

Bldg. 9281
Eglin AFB
Santa Rosa Island
Okaloosa Co: FL 32542–5133
Landholding Agency: Air Force
Property Number: 18199910006
Status: Unutilized
Reasons: Floodway; Secured Area; Extensive deterioration.

Bldg. 9280
Eglin AFB
Santa Rosa Island
Okaloosa Co: FL 32542–5133
Landholding Agency: Air Force
Property Number: 18199910007
Status: Unutilized
Reasons: Floodway; Secured Area; Extensive deterioration.

Bldg. 609
Eglin AFB
Santa Rosa Island
Okaloosa Co: FL 32542–5133
Landholding Agency: Air Force
Property Number: 18199910008
Status: Unutilized
Reasons: Secured Area; Extensive deterioration.

Bldg. 01103
Cape Canaveral Air Station
Brevard Co: FL 32025–
Landholding Agency: Air Force
Property Number: 18199910009
Status: Unutilized
Reason: Secured Area.

Bldg. 55152
Cape Canaveral Air Station
Brevard Co: FL 32925–
Landholding Agency: Air Force
Property Number: 18199910010
Status: Unutilized
Reason: Secured Area.

Guam

Andersen South
Andersen Admin. Annex

360 housing units & a commercial structure
Mangilao GU 96923–
Landholding Agency: Air Force
Property Number: 18199840009
Status: Unutilized
Reason: Secured Area.

Idaho

Bldg. 1012
Mountain Home Air Force Base
7th Avenue
(See County) Co: Elmore ID 83648–
Landholding Agency: Air Force
Property Number: 18199030004
Status: Excess
Reasons: Within 2000 ft. of flammable or explosive material.

Bldg. 923
Mountain Home Air Force Base
7th Avenue
(See County) Co: Elmore ID 83648–
Landholding Agency: Air Force
Property Number: 18199030005
Status: Excess
Reason: Within 2000 ft. of flammable or explosive material.

Bldg. 604
Mountain Home Air Force Base
Pine Street
(See County) Co: Elmore ID 83648–
Landholding Agency: Air Force
Property Number: 18199030006
Status: Excess
Reason: Within 2000 ft. of flammable or explosive material.

Bldg. 229
Mt. Home Air Force Base
1st Avenue and A Street
Mt. Home AFB Co: Elmore ID 83648–
Landholding Agency: Air Force
Property Number: 18199040857
Status: Excess
Reasons: Within 2000 ft. of flammable or explosive material; Within airport runway clear zone.

Bldg. 4403
Mountain Home Air Force Base
Mountain Home Co: Elmore ID 83647–
Landholding Agency: Air Force
Property Number: 18199520008
Status: Excess
Reason: Extensive deterioration.

Bldg. 101
Mountain Home Air Force Base
Co: Elmore ID 83648–
Landholding Agency: Air Force
Property Number: 18199840001
Status: Excess
Reason: Extensive deterioration.

Bldg. 105
Mountain Home Air Force Base
Co: Elmore ID 83648–
Landholding Agency: Air Force
Property Number: 18199840002
Status: Excess
Reason: Extensive deterioration.

Bldg. AFD0070
Albeni Falls Dam
Oldtown Co: Bonner ID 83822–
Landholding Agency: COE
Property Number: 31199910001
Status: Excess
Reason: Extensive deterioration.

Indiana

Brookville Lake—Bldg.
Brownsville Rd. in Union
Liberty Co: Union IN 47353–
Landholding Agency: COE
Property Number: 31199440004
Status: Excess
Reason: Extensive deterioration.

Iowa

Bldg. 00671
Sioux Gateway Airport
Sioux Co: Woodbury IA 51110–
Landholding Agency: Air Force
Property Number: 18199310009
Status: Unutilized
Reason: Fuel pump station.

Bldg. 00736
Sioux Gateway Airport
Sioux Co: Woodbury IA 51110–
Landholding Agency: Air Force
Property Number: 18199310010
Status: Unutilized
Reason: Pump station.

House, Tract 100
Camp Dodge
Johnston Co: Polk IA 50131–
Landholding Agency: COE
Property Number: 31199530002
Status: Excess
Reason: Extensive deterioration.

Play House, Tract 100
Camp Dodge
Johnston Co: Polk IA 51031–
Landholding Agency: COE
Property Number: 31199530003
Status: Excess
Reason: Extensive deterioration.

House, Tract 122
Camp Dodge
Johnston Co: Polk IA 50131–
Landholding Agency: COE
Property Number: 31199530004
Status: Excess
Reason: Extensive deterioration.

Shed, Tract 122
Camp Dodge
Johnston Co: Polk IA 50131–
Landholding Agency: COE
Property Number: 31199530005
Status: Excess
Reason: Extensive deterioration.

Garage, Tract 122
Camp Dodge
Johnston Co: Polk IA 50131–
Landholding Agency: COE
Property Number: 31199530006
Status: Excess
Reason: Extensive deterioration.

Machine Shed, Tract 122
Camp Dodge
Johnston Co: Polk IA 50131–
Landholding Agency: COE
Property Number: 31199530007
Status: Excess
Reason: Extensive deterioration.

Barn, Tract 122
Camp Dodge
Johnston Co: Polk IA 50131–
Landholding Agency: COE
Property Number: 31199530008
Status: Excess
Reason: Extensive deterioration.

2-Car Garage, Tract 122
Camp Dodge
Johnston Co: Polk IA 50131–
Landholding Agency: COE
Property Number: 31199530009
Status: Excess
Reason: Extensive deterioration.

Barn, Tract 128
Camp Dodge
Johnston Co: Polk IA 50131–
Landholding Agency: COE
Property Number: 31199530010
Status: Excess
Reason: Extensive deterioration.

Shed, Tract 128
Camp Dodge
Johnston Co: Polk IA 50131–
Landholding Agency: COE
Property Number: 31199530011
Status: Excess
Reason: Extensive deterioration.

House, Tract 129
Camp Dodge
Johnston Co: Polk IA 50131–
Landholding Agency: COE
Property Number: 31199530012
Status: Excess
Reason: Extensive deterioration.

Play House, Tract 129
Camp Dodge
Johnston Co: Polk IA 50131–
Landholding Agency: COE
Property Number: 31199530013
Status: Excess
Reason: Extensive deterioration.

Kennel, Tract 129
Camp Dodge
Johnston Co: Polk IA 50131–
Landholding Agency: COE
Property Number: 31199530014
Status: Excess
Reason: Extensive deterioration.

Corn Crib, Tract 129
Camp Dodge
Johnston Co: Polk IA 50131–
Landholding Agency: COE
Property Number: 31199530015
Status: Excess
Reason: Extensive deterioration.

Barn W, Tract 129
Camp Dodge
Johnston Co: Polk IA 50131–
Landholding Agency: COE
Property Number: 31199530016
Status: Excess
Reason: Extensive deterioration.

Barn E, Tract 129
Camp Dodge
Johnston Co: Polk IA 50131–
Landholding Agency: COE
Property Number: 31199530017
Status: Excess
Reason: Extensive deterioration.

Shed, Tract 129
Camp Dodge
Johnston Co: Polk IA 50131–
Landholding Agency: COE
Property Number: 31199530018
Status: Excess
Reason: Extensive deterioration.

House, Tract 130
Camp Dodge
Johnston Co: Polk IA 50131–
Landholding Agency: COE
Property Number: 31199530019
Status: Excess
Reason: Extensive deterioration.

Out House, Tract 130
Camp Dodge
Johnston Co: Polk IA 50131–
Landholding Agency: COE
Property Number: 31199530020
Status: Excess
Reason: Extensive deterioration.

Chicken House, Tract 130
Camp Dodge
Johnston Co: Polk IA 50131–
Landholding Agency: COE
Property Number: 31199530021
Status: Excess
Reason: Extensive deterioration.

Shed, Tract 130
Camp Dodge
Johnston Co: Polk IA 50131–
Landholding Agency: COE
Property Number: 31199530022
Status: Excess
Reason: Extensive deterioration.

Barn, Tract 135
Camp Dodge
Johnston Co: Polk IA 50131–
Landholding Agency: COE
Property Number: 31199530023
Status: Excess
Reason: Extensive deterioration.

Smokehouse, Tract 135
Camp Dodge
Johnston Co: Polk IA 50131–
Landholding Agency: COE
Property Number: 31199530024
Status: Excess
Reason: Extensive deterioration.

Shed, Tract 137
Camp Dodge
Johnston Co: Polk IA 50131–
Landholding Agency: COE
Property Number: 31199530025
Status: Excess
Reason: Extensive deterioration.

Shed—White, Tract 137
Camp Dodge
Johnston Co: Polk IA 50131–
Landholding Agency: COE
Property Number: 31199530026
Status: Excess
Reason: Extensive deterioration.

Leanto, Tract 137
Camp Dodge
Johnston Co: Polk IA 50131–
Landholding Agency: COE
Property Number: 31199530027
Status: Excess
Reason: Extensive deterioration.

Tract 116, Camp Dodge
Johnston Co: Polk IA 50131–
Landholding Agency: COE
Property Number: 31109630006
Status: Unutilized
Reason: Extensive deterioration.

Kansas

Bldg. 2703
Forbes Field
Topeka KS
Landholding Agency: Air Force
Property Number: 18199820018
Status: Unutilized
Reason; Extensive deterioration.

Sunflower AAP
DeSoto Co: Johnson KS 66018–
Landholding Agency: GSA
Property Number: 54199830010
Status: Excess
Reason: Extensive deterioration;
GSA Number: 7–D–KS–0581.

Kentucky

Spring House
Kentucky River Lock and Dam
No. 1
Highway 320
Carrollton Co: Carroll KY 41008–
Landholding Agency: COE
Property Number: 21199040416
Status: Unutilized
Reason: Spring House.

Building
Kentucky River Lock and Dam
No. 4
1021 Kentucky Avenue
Frankfort Co: Franklin KY 40601–9999
Landholding Agency: COE
Property Number: 21199040417
Status: Unutilized
Reason: Coal Storage.

Building
Kentucky River Lock and Dam
No. 4
1021 Kentucky Avenue
Frankfort Co: Franklin KY 40601–9999
Landholding Agency: COE
Property Number: 21199040418
Status: Unutilized
Reason: Coal Storage.

Barn
Kentucky River Lock and Dam
No. 3
Highway 561
Pleasureville Co: Henry KY 40057–
Landholding Agency: COE
Property Number: 21199040419
Status: Underutilized
Reason: Exentsive deterioration.

Latrine
Kentucky River Lock and Dam
Number 3
Highway 561
Pleasureville Co: Henry KY 40057–
Landholding Agency: COE
Property Number: 31199040009
Status: Unutilized
Reason: Detached Latrine.

6-Room Dwelling
Green River Lock and Dam
No. 3
Rochester Co: Butler KY 42273–
Location: Off State Hwy 369, which runs off of Western Ky. Parkway
Landholding Agency: COE
Property Number: 31199120010
Status: Unutilized
Reason: Floodway.

2-Car Garage
Green River Lock and Dam No. 3
Rochester Co: Butler KY 42273–
Location: Off State Highway 369, which runs off of Western Ky. Parkway
Landholding Agency: COE
Property Number: 31199120011
Status: Unutilized
Reason: Floodway.

Office and Warehouse
Green River Lock and Dam No. 3
Rochester Co: Butler KY 42273–
Location: Off State Highway 369, which runs off of Western Ky. Parkway
Landholding Agency: COE
Property Number: 31199120012
Status: Unutilized
Reason: Floodway.

2 Pit Toilets
Green River Lock and Dam No. 3
Rochester Co: Butler KY 42273–
Landholding Agency: COE
Property Number: 31199120013
Status: Unutilized
Reason: Floodway.

Louisiana

Bldg. 3477
Barksdale Air Force Base
Davis Avenue
Barksdale AFB Co: Bossier LA 71110–5000
Landholding Agency: Air Force
Property Number: 18199140015
Status: Unutilized
Reason: Secured Area.

Maryland

Bldg. 3542
Andrews AFB
Andrews AFB MD 20652–25177
Landholding Agency: Air Force
Property Number: 18199810010
Status: Unutilized
Reason: Secured Area.

Bldg. 3543
Andrews AFB
Andrews AFB MD 20652–25177
Landholding Agency: Air Force
Property Number: 18199810011
Status: Unutilized
Reason: Secured Area.

7 Bldgs.
Davidsonville Family Housing
Annex
300, 301, 303, 305, 308, 309, 311
Davidsonville Co: Anne Arundel MD 20755–
Landholding Agency: Air Force
Property Number: 18199910011
Status: Unutilized
Reason: Extensive deterioration.

8 Bldgs.
Davidsonville Family Housing
Annex
302, 306, 307, 310, 312–315
Davidsonville Co: Anne Arundel MD 20755–
Landholding Agency: Air Force
Property Number: 18199910012
Status: Unutilized
Reason: Extensive deterioration.

Michigan

Bldg. 71
Calumet Air Force Station
Calumet Co: Keweenaw MI 49913–
Landholding Agency: Air Force
Property Number: 18199010810
Status: Excess
Reason: Sewage treatment and disposal facility.

Bldg. 99 (WATER WELL)
Calumet Air Force Station
Calumet Co: Keweenaw MI 49913–
Landholding Agency: Air Force
Property Number: 18199010831
Status: Excess
Reason: Water well.

Bldg. 100 (WATER WELL)
Calumet Air Force Station
Calumet Co: Keweenaw MI 49913–
Landholding Agency: Air Force
Property Number: 18199010832

Status: Excess
Reason: Water well.

Bldg. 118
Calumet Air Force Station
Calumet Co: Keweenaw MI 49913–
Landholding Agency: Air Force
Property Number: 18199010875
Status: Excess
Reason: Gasoline Station.

Bldg. 120
Calumet Air Force Station
Calumet Co: Keweenaw MI 49913–
Landholding Agency: Air Force
Property Number: 18199010876
Status: Excess
Reason: Gasoline Station.

Bldg. 166
Calumet Air Force Station
Calumet Co: Keweenaw MI 49913–
Landholding Agency: Air Force
Property Number: 18199010877
Status: Excess
Reason: Pump lift station.

Bldg. 168
Calumet Air Force Station
Calumet Co: Keweenaw MI 49913–
Landholding Agency: Air Force
Property Number: 18199010878
Status: Excess
Reason: Gasoline Station.

Bldg. 69
Calumet Air Force Station
Calumet Co: Keweenaw MI 49913–
Landholding Agency: Air Force
Property Number: 18199010889
Status: Excess
Reason: Sewer pump facility.

Bldg. 2
Calumet Air Force Station
Calumet Co: Keweenaw MI 49913–
Landholding Agency: Air Force
Property Number: 18199010890
Status: Excess
Reason: Water pump station.

Facility 20
Selfridge AFB
Mt. Clemens Co: Macomb MI 48045–5295
Landholding Agency: Air Force
Property Number: 18199630001
Status: Unutilized
Reasons: With 2000 ft. of flammable or explosive material; Secured Area.

Facility 21
Selfridge AFB
Mt. Clemens Co: Macomb MI 48045–5295
Landholding Agency: Air Force
Property Number: 18199630002
Status: Unutilized
Reasons: Within 2000 ft. of flammable or explosive material. Secured Area.

Facility 30
Selfridge AFB
Mt. Clemens Co: Macomb MI 48045–5295
Landholding Agency: Air Force
Property Number: 18199630003
Status: Unutilized
Reasons: Within 2000 ft. of flammable or explosive material. Secured Area.

Facility 98
Selfridge AFB
Mt. Clemens Co: Macomb MI 48045–5295
Landholding Agency: Air Force
Property Number: 18199630004
Status: Unutilized
Reasons: Within 2000 ft. of flammable or explosive material. Secured Area.

Facility 103
Selfridge AFB
Mt. Clemens Co: Macomb MI 48045–5295
Landholding Agency: Air Force
Property Number: 18199630005
Status: Unutilized
Reasons: Within 2000 ft. of flammable or explosive material. Secured Area.

Facility 116
Selfridge AFB
Mt. Clemens Co: Macomb MI 48045–5295
Landholding Agency: Air Force
Property Number: 18199630006
Status: Unutilized
Reasons: Within 2000 ft. of flammable or explosive material. Secured Area.

Facility 129
Selfridge AFB
Mt. Clemens Co: Macomb MI 48045–5295
Landholding Agency: Air Force
Property Number: 18199630007
Status: Unutilized
Reasons: Within 2000 ft. of flammable or explosive material. Secured Area.

Facility 152
Selfridge AFB
Mt. Clemens Co: Macomb MI 48045–5295
Landholding Agency: Air Force
Property Number: 18199630008
Status: Unutilized
Reasons: Within 2000 ft. of flammable or explosive material. Secured Area.

Facility 156
Selfridge AFB
Mt. Clemens Co: Macomb MI 48045–5295
Landholding Agency: Air Force
Property Number: 18199630009
Status: Unutilized
Reasons: Within 2000 ft. of flammable or explosive material. Secured Area.

Facility 181
Selfridge AFB
Mt. Clemens Co: Macomb MI 48045–5295
Landholding Agency: Air Force
Property Number: 18199630010
Status: Unutilized
Reasons: Within 2000 ft. of flammable or explosive material. Secured Area.

Facility 509
Selfridge AFB
Mt. Clemens Co: Macomb MI 48045–5295
Landholding Agency: Air Force
Property Number: 18199630011
Status: Unutilized
Reasons: Within 2000 ft. of flammable or explosive material. Secured Area.

Facility 562
Selfridge AFB
Mt. Clemens Co: Macomb MI 48045–5295
Landholding Agency: Air Force
Property Number: 18199630012
Status: Unutilized
Reasons: Within 2000 ft. of flammable or explosive material. Secured Area.

Facility 573
Selfridge AFB
Mt. Clemens Co: Macomb MI 48045–5295
Landholding Agency: Air Force
Property Number: 18199630013
Status: Unutilized
Reason: Secured Area.

Facility 801
Selfridge AFB
Mt. Clemens Co: Macomb MI 48045–5295
Landholding Agency: Air Force
Property Number: 18199630014
Status: Unutilized
Reasons: Within 2000 ft. of flammable or explosive material. Secured Area.

Facility 827
Selfridge AFB
Mt. Clemens Co: Macomb MI 48045–5295
Landholding Agency: Air Force
Property Number: 18199630015
Status: Unutilized
Reasons: Within 2000 ft. of flammable or explosive material. Secured Area.

Facility 832
Selfridge AFB
Mt. Clemens Co: Macomb MI 48045–5295
Landholding Agency: Air Force
Property Number: 18199630016
Status: Unutilized
Reasons: Within 2000 ft. of flammable or explosive material. Secured Area.

Facility 833
Selfridge AFB
Mt. Clemens Co: Macomb MI 48045–5295
Landholding Agency: Air Force
Property Number: 18199630017
Status: Unutilized
Reasons: Within 2000 ft. of flammable or explosive material. Secured Area.

Facility 1005
Selfridge AFB
Mt. Clemens Co: Macomb MI 48045–5295
Landholding Agency: Air Force
Property Number: 18199630018
Status: Unutilized
Reason: Secured Area.

Facility 1012
Selfridge AFB
Mt. Clemens Co: Macomb MI 48045–5295
Landholding Agency: Air Force
Property Number: 18199630019
Status: Unutilized
Reason: Secured Area.

Facility 1017
Selfridge AFB
Mt. Clemens Co: Macomb MI 48045–5295
Landholding Agency: Air Force
Property Number: 18199630020
Status: Unutilized
Reason: Secured Area.

Facility 1025
Selfridge AFB
Mt. Clemens Co: Macomb MI 48045–5295
Landholding Agency: Air Force
Property Number: 18199630021
Status: Unutilized
Reason: Secured Area.

Facility 1031
Selfridge AFB
Mt. Clemens Co: Macomb MI 48045–5295
Landholding Agency: Air Force
Property Number: 18199630022
Status: Unutilized
Reason: Secured Area.

Facility 1041
Selfridge AFB
Mt. Clemens Co: Macomb MI 48045–5295
Landholding Agency: Air Force
Property Number: 18199630023
Status: Unutilized
Reasons: Within 2000 ft. of flammable or explosive material. Secured Area.

Facility 1445
Selfridge AFB
Mt. Clemens Co: Macomb MI 48045–5295
Landholding Agency: Air Force
Property Number: 18199630024
Status: Unutilized
Reasons: Within 2000 ft. of flammable or explosive material. Secured Area.

Facility 1514
Selfridge AFB
Mt. Clemens Co: Macomb MI 48045–5295
Landholding Agency: Air Force
Property Number: 18199630025
Status: Unutilized
Reason: Secured Area.

Facility 1575
Selfridge AFB
Mt. Clemens Co: Macomb MI 48045–5295
Landholding Agency: Air Force
Property Number: 18199630026
Status: Unutilized
Reasons: Within 2000 ft. of flammable or explosive material. Secured Area.

Facility 1576
Selfridge AFB
Mt. Clemens Co: Macomb MI 48045–5295
Landholding Agency: Air Force
Property Number: 18199630027
Status: Unutilized
Reasons: Within 2000 ft. of flammable or explosive material. Secured Area.

Facility 1578
Selfridge AFB
Mt. Clemens Co: Macomb MI 48045–5295
Landholding Agency: Air Force
Property Number: 18199630028
Status: Unutilized
Reasons: Within 2000 ft. of flammable or explosive material. Secured Area.

Facility 1580
Selfridge AFB
Mt. Clemens Co: Macomb MI 48045–5295
Landholding Agency: Air Force
Property Number: 18199630029
Status: Unutilized
Reasons: Within 2000 ft. of flammable or explosive material; Secured Area.

Facility 1582
Selfridge AFB
Mt. Clemens Co: Macomb MI 48045–5295
Landholding Agency: Air Force
Property Number: 18199630030
Status: Unutilized
Reasons: Within 2000 ft. of flammable or explosive material; Secured Area.

Facility 1583
Selfridge AFB
Mt. Clemens Co: Macomb MI 48045–5295
Landholding Agency: Air Force
Property Number: 18199630031
Status: Unutilized
Reasons: Within 2000 ft. of flammable or explosive material; Secured Area.

Facility 1584
Selfridge AFB
Mt. Clemens Co: Macomb MI 48045–5295
Landholding Agency: Air Force
Property Number: 18199630032
Status: Unutilized
Reasons: Within 2000 ft. of flammable or explosive material; Secured Area.

Facility 1585
Selfridge AFB
Mt. Clemens Co: Macomb MI 48045–5295
Landholding Agency: Air Force
Property Number: 18199630033
Status: Unutilized
Reasons: Within 2000 ft. of flammable or explosive material; Secured Area.

Facilities 246, 248, 252–254
Selfridge Air National Guard
Mt. Clemens Co: Macomb MI 48045–5295
Landholding Agency: Air Force
Property Number: 18199710039
Status: Unutilized
Reasons: Within 2000 ft. of flammable or explosive material; Secured Area.

7 Facilities
Selfridge Air National Guard
#240, 242, 244, 245, 247, 250, 251
Mt. Clemens Co: Macomb MI 48045–5295
Landholding Agency: Air Force
Property Number: 18199710040
Status: Unutilized
Reasons: Within 2000 ft. of flammable or explosive material; Secured Area.

Facilities 237, 238
Selfridge Air National Guard
Mt. Clemens Co: Macomb MI 48045–5295
Landholding Agency: Air Force
Property Number: 18199710041
Status: Unutilized
Reasons: Within 2000 ft. of flammable or explosive material; Secured Area.

5 Facilities
Selfridge Air National Guard
#228, 230, 232, 234, 236
Mt. Clemens Co: Macomb MI 48045–5295
Landholding Agency: Air Force
Property Number: 18199710042
Status: Unutilized
Reasons: Within 2000 ft. of flammable or explosive material; Secured Area.

Facility 114
Selfridge Air National Guard
Mt. Clemens Co: Macomb MI 48045–5295
Landholding Agency: Air Force
Property Number: 18199710043
Status: Unutilized
Reasons: Within 2000 ft. of flammable or explosive material. Secured Area.

15 Offshore Lighthouses
Great Lakes MI
Landholding Agency: GSA
Property Number: 54199630014
Status: Excess
Reason: Extensive deterioration.

Fog Signal Building
St. Martins Island Co: Delta MI 49829–
Landholding Agency: GSA
Property Number: 54199640001
Status: Unutilized
Reason: Inaccessible
GSA Number: 1–U–MI–760.

Paint Locker
St. Martins Island/Lake Michigan
Co. Delta MI 49829–
Landholding Agency: GSA
Property Number: 54199640009
Status: Excess
Reason: Inaccessible
GSA Number: 1–U–MI–760.

Dwelling/Light Tower
St. Martins Island/Lake Michigan
Co. Delta MI 49829–
Landholding Agency: GSA
Property Number: 54199640010
Status: Excess
Reason: Inaccessible
GSA Number: 1–U–MI–760.

Parcel 14, Boat House
East Tawas Co: Iosco MI
Landholding Agency: GSA
Property Number: 54199730014
Status: Excess
Reason: Extensive deterioration
GSA Number: 1–U–M–500.

Round Island Passage Light
Lake Huron
Lake Huron Co: Mackinac MI
Landholding Agency: GSA
Property Number: 54199730019
Status: Excess
Reason: Inaccessible
GSA Number: 1–U–MI–444B.

St. Clair Flats Station
Harsens Island Co: St. Clair MI 48028–
Landholding Agency: GSA
Property Number: 54199730020
Status: Excess
Reason: Inaccessible.
GSA Number: 1–U–MI–762.

Harbor Beach Coast Guard
Harbor Beach Co: Huron MI 48441–
Landholding Agency: GSA
Property Number: 54199810004
Status: Excess
Reasons: Within 2000 ft. of flammable or explosive material. Extensive deterioration; GSA Number: 1–U–MI–492C.

Granite Island Light Station
Lake Superior
Lake Superior MI
Landholding Agency: GSA
Property Number: 54199840001
Status: Excess
Reason: Inaccessible
GSA Number: 1–U–MI–791.

Tract 100–1
Calumet Air Force Station
Calumet Co: Keweenaw MI 49913–
Landholding Agency: GSA
Property Number: 54199840003
Status: Excess
Reason: No legal access
GSA Number: 1–D–MI–659A.

Tracts 100–2, 100–3
Calumet Air Force Station
Calumet Co: Keweenaw MI 49913–
Landholding Agency: GSA
Property Number: 54199840004
Status: Excess
Reason: No legal access
GSA Number: 1–D–MI–659A.

Minnesota

Federal Building
200 East 4th Street
Redwood Falls Co: Redwood MN 56283–
Landholding Agency: GSA
Property Number: 54199740017
Status: Excess
Reasons: Within 2000 ft. of flammable or explosive material.
GSA Number: 1–G–MN–563.

Missouri

Tract 2222
Stockton Project
Aldrich Co: Polk MO 65601–
Landholding Agency: COE
Property Number: 31199510001
Status: Excess

Reason: Extensive deterioration.

Barn, Longview Lake
Kansas City Co: Jackson MO 64134–
Landholding Agency: COE
Property Number: 31199620001
Status: Excess
Reason: Extensive deterioration.

South Coast Guard Base
Iron Street
St. Louis MO 63111–2536
Landholding Agency: GSA
Property Number: 54199740010
Status: Surplus
Reasons: Within 2000 ft. of flammable or explosive material; Floodway; Extensive deterioration
GSA Number: 7–U–MO–0576–B.

Montana

Bldg. 1189, Malmstrom AFB
Malmstrom AFB Co: Cascade MT 59402–
Landholding Agency: Air Force
Property Number: 18199540013
Status: Underutilized
Reason: Secured Area.

Bldg. 1308, Malmstrom AFB
Malmstrom AFB Co: Cascade MT 59402–
Landholding Agency: Air Force
Property Number: 18199540014
Status: Underutilized
Reason: Secured Area.

Bldg. 547
Malmstrom AFB
Malmstrom AFB Co: Cascade MT 59402–
Landholding Agency: Air Force
Property Number: 18199720025
Status: Unutilized
Reasons: Within 2000 ft. of flammable or explosive material; Secured Area.

Bldg. 23
Great Falls ANG Station
Great Falls Co: Cascade MT 59404–
Landholding Agency: Air Force
Property Number: 18199720030
Status: Excess
Reasons: Within 2000 ft. of flammable or explosive material; Secured Area.

Bldg. 24
Great Falls ANG Station
Great Falls Co: Cascade MT 59404–
Landholding Agency: Air Force
Property Number: 18199720031
Status: Excess
Reasons: Within 2000 ft. of flammable or explosive material; Secured Area.

Bldg. 35
Great Falls ANG Station
Great Falls Co: Cascade MT 59404–
Landholding Agency: Air Force
Property Number: 18199720033
Status: Excess
Reasons: Within 2000 ft. of flammable or explosive material; Secured Area.

Bldg. 360
Malmstrom AFB
Malmstrom AFB Co: Cascade MT 59402–
Landholding Agency: Air Force
Property Number: 18199720037
Status: Excess
Reason: Secured Area.

Bldg. 230
Malmstrom AFB
Malmstrom AFB Co: Cascade MT 59402–
Landholding Agency: Air Force
Property Number: 18199810012
Status: Unutilized
Reasons: Within 2000 ft. of flammable or explosive material; Secured Area.

Bldg. 1065
Malmstrom AFB
Malmstrom AFB Co: Cascade MT 59402–
Landholding Agency: Air Force
Property Number: 18199810013
Status: Unutilized
Reasons: Within 2000 ft. of flammable or explosive material; Secured Area.

Bldg. 1305
Malmstrom AFB
Malmstrom AFB Co: Cascade MT 59402–
Landholding Agency: Air Force
Property Number: 18199810014
Status: Unutilized
Reasons: Within 2000 ft. of flammable or explosive material; Secured Area.

Bldg. 22
Great Falls IAP
Great Falls Co: Cascade MT 59404–5570
Landholding Agency: Air Force
Property Number: 18199820019
Status: Underutilized
Reasons: Within 2000 ft. of flammable or explosive material; Secured Area.

Bldg. 803
Malmstrom AFB
Co: Cascade MT 59402–
Landholding Agency: Air Force
Property Number: 18199840003
Status: Unutilized
Reasons: Within 2000 ft. of flammable or explosive material; Secured Area.

Bldg. 1060
Malmstrom AFB
Co: Cascade MT 59402–
Landholding Agency: Air Force
Property Number: 18199840004
Status: Unutilized
Reasons: Within 2000 ft. of flammable or explosive material; Secured Area.

Bldg. 1846
Malmstrom AFB
Co: Cascade MT 59402–
Landholding Agency: Air Force
Property Number: 18199840005
Status: Unutilized
Reasons: Within 2000 ft. of flammable or explosive material; Secured Area.

Bldg. 1847
Malmstrom AFB
Co: Cascade MT 59402–
Landholding Agency: Air Force
Property Number: 18199840006
Status: Unutilized
Reasons: Within 2000 ft. of flammable or explosive material; Secured Area.

Nebraska

Offutt Communications Annex-#3
Offutt Air Force Base
Scribner Co: Dodge NE 68031–
Landholding Agency: Air Force
Property Number: 18199210006
Status: Unutilized
Reason: Former sewage lagoon.

Bldg. 637
Lincoln Municipal Airport
Lincoln Co: Lancaster NE 68524–
Landholding Agency: Air Force
Property Number: 18199230021
Status: Unutilized
Reason: Extensive deterioration.

Bldg. 639
Lincoln Municipal Airport
2301 West Adams
Lincoln Co: Lancaster NE 68524–
Landholding Agency: Air Force
Property Number: 18199230022
Status: Unutilized
Reason: Extensive deterioration.

Bldg. 31
Offutt Air Force Base
Sac Boulevard
Offutt Co: Sarpy NE 68113–
Landholding Agency: Air Force
Property Number: 18199240007
Status: Unutilized
Reason: Secured Area.

Bldg. 311
Offutt Air Force Base
Nelson Drive
Offutt Co: Sarpy NE 68113–
Landholding Agency: Air Force
Property Number: 18199240008
Status: Unutilized
Reason: Secured Area.

Bldg. 401
Offutt Air Force Base
Custer Drive
Offutt Co: Sarpy NE 68113–
Landholding Agency: Air Force
Property Number: 18199240009
Status: Unutilized
Reason: Secured Area.

Bldg. 416
Offutt Air Force Base
Sherman Turnpike
Offutt Co: Sarpy NE 68113–
Landholding Agency: Air Force
Property Number: 18199240010
Status: Unutilized
Reason: Secured Area.

Bldg. 417
Offutt Air Force Base
Sherman Turnpike
Offutt Co: Sarpy NE 68113–
Landholding Agency: Air Force
Property Number: 18199240011
Status: Unutilized
Reason: Secured Area.

Bldg. 545
Offutt Air Force Base
Offutt Co: Sarpy NE 68113–
Landholding Agency: Air Force
Property Number: 18199240012
Status: Unutilized
Reason: Secured Area.

Bldg. 21
Hastings Radar Bomb Scoring Site
Hastings Co: Adams NE 68901–
Landholding Agency: Air Force
Property Number: 18199320058
Status: Excess
Reason: Generator.

Bldg. 4, Hastings Family Hsg.
Hastings Radar Bomb Scoring Site
Hastings Co: Adams NE 68901–
Landholding Agency: Air Force
Property Number: 18199320059
Status: Excess
Reason: Contamination.

Bldg. 500
Hastings Family Housing
Hastings Radar Bomb Scoring Site
Hastings Co: Adams NE 68901–
Landholding Agency: Air Force

Property Number: 18199320060
Status: Excess
Reason: Contamination.

Bldg. 502
Hastings Family Housing
Hastings Radar Bomb Scoring Site
Hastings Co: Adams NE 68901–
Landholding Agency: Air Force
Property Number: 18199320061
Status: Excess
Reason: Contamination.

Bldg. 504
Hastings Family Housing
Hastings Radar Bomb Scoring Site
Hastings Co: Adams NE 68901–
Landholding Agency: Air Force
Property Number: 18199320062
Status: Excess
Reason: Contamination.

Bldg. 506
Hastings Family Housing
Hastings Radar Bomb Scoring Site
Hastings Co: Adams NE 68901–
Landholding Agency: Air Force
Property Number: 18199320063
Status: Excess
Reason: Contamination.

Bldg. 507
Hastings Family Housing
Hastings Radar Bomb Scoring Site
Hastings Co: Adams NE 68901–
Landholding Agency: Air Force
Property Number: 18199320064
Status: Excess
Reason: Contamination.

Bldg. 509
Hastings Family Housing
Hastings Radar Bomb Scoring Site
Hastings Co: Adams NE 68901–
Landholding Agency: Air Force
Property Number: 18199320065
Status: Excess
Reason: Contamination.

Bldg. 511
Hastings Family Housing
Hastings Radar Bomb Scoring Site
Hastings Co: Adams NE 68901–
Landholding Agency: Air Force
Property Number: 18199320066
Status: Excess
Reason: Contamination.

Bldg. 512
Hastings Family Housing
Hastings Radar Bomb Scoring Site
Hastings Co: Adams NE 68901–
Landholding Agency: Air Force
Property Number: 18199320067
Status: Excess
Reason: Contamination.

Bldg. 515
Hastings Family Housing
Hastings Radar Bomb Scoring Site
Hastings Co: Adams NE 68901–
Landholding Agency: Air Force
Property Number: 18199320068
Status: Excess
Reason: Contamination.

Bldg. 517
Hastings Family Housing
Hastings Radar Bomb Scoring Site
Hastings Co: Adams NE 68901–
Landholding Agency: Air Force
Property Number: 18199320069
Status: Excess
Reason: Contamination.

Bldg. 519
Hastings Family Housing
Hastings Radar Bomb Scoring Site
Hastings Co: Adams NE 68901–
Landholding Agency: Air Force
Property Number: 18199320070
Status: Excess
Reason: Contamination.

Bldg. 521
Hastings Family Housing
Hastings Radar Bomb Scoring Site
Hastings Co: Adams NE 68901–
Landholding Agency: Air Force
Property Number: 18199320071
Status: Excess
Reason: Contamination.

Bldg. 523
Hastings Family Housing
Hastings Radar Bomb Scoring Site
Hastings Co: Adams NE 68901–
Landholding Agency: Air Force
Property Number: 18199320072
Status: Excess
Reason: Contamination.

Bldg. 525
Hastings Family Housing
Hastings Radar Bomb Scoring Site
Hastings Co: Adams NE 68901–
Landholding Agency: Air Force
Property Number: 18199320073
Status: Excess
Reason: Contamination.

Bldg. 526
Hastings Family Housing
Hastings Radar Bomb Scoring Site
Hastings Co: Adams NE 68901–
Landholding Agency: Air Force
Property Number: 18199320074
Status: Excess
Reason: Contamination.

Bldg. 529
Hastings Family Housing
Hastings Radar Bomb Scoring Site
Hastings Co: Adams NE 68901–
Landholding Agency: Air Force
Property Number: 18199320075
Status: Excess
Reason: Contamination.

Bldg. 531
Hastings Family Housing
Hastings Radar Bomb Scoring Site
Hastings Co: Adams NE 68901–
Landholding Agency: Air Force
Property Number: 18199320076
Status: Excess
Reason: Contamination.

Bldg. 533
Hastings Family Housing
Hastings Radar Bomb Scoring Site
Hastings Co: Adams NE 68901–
Landholding Agency: Air Force
Property Number: 18199320077
Status: Excess
Reason: Contamination.

Bldg. 534
Hastings Family Housing
Hastings Radar Bomb Scoring Site
Hastings Co: Adams NE 68901–
Landholding Agency: Air Force
Property Number: 18199320078
Status: Excess
Reason: Contamination.

Bldg. 536
Hastings Family Housing
Hastings Radar Bomb Scoring Site
Hastings Co: Adams NE 68901–
Landholding Agency: Air Force
Property Number: 18199320079
Status: Excess
Reason: Contamination.

Bldg. 538
Hastings Family Housing
Hastings Radar Bomb Scoring Site
Hastings Co: Adams NE 68901–
Landholding Agency: Air Force
Property Number: 18199320080
Status: Excess
Reason: Contamination.

Bldg. 541
Hastings Family Housing
Hastings Radar Bomb Scoring Site
Hastings Co: Adams NE 68901–
Landholding Agency: Air Force
Property Number: 18199320081
Status: Excess
Reason: Contamination.

Bldg. 542
Hastings Family Housing
Hastings Radar Bomb Scoring Site
Hastings Co: Adams NE 68901–
Landholding Agency: Air Force
Property Number: 18199320082
Status: Excess
Reason: Contamination.

Bldg. 544
Hastings Family Housing
Hastings Radar Bomb Scoring Site
Hastings Co: Adams NE 68901–
Landholding Agency: Air Force
Property Number: 18199320083
Status: Excess
Reason: Contamination.

Bldg. 546
Hastings Family Housing
Hastings Radar Bomb Scoring Site
Hastings Co: Adams NE 68901–
Landholding Agency: Air Force
Property Number: 18199320084
Status: Excess
Reason: Contamination.

Bldg. 549
Hastings Family Housing
Hastings Radar Bomb Scoring Site
Hastings Co: Adams NE 68901–
Landholding Agency: Air Force
Property Number: 18199320085
Status: Excess
Reason: Contamination.

Bldg. 550
Hastings Family Housing
Hastings Radar Bomb Scoring Site
Hastings Co: Adams NE 68901–
Landholding Agency: Air Force
Property Number: 18199320086
Status: Excess
Reason: Contamination.

Bldg. 552
Hastings Family Housing
Hastings Radar Bomb Scoring Site
Hastings Co: Adams NE 68901–
Landholding Agency: Air Force
Property Number: 18199320087
Status: Excess
Reason: Contamination.

Bldg. 553
Hastings Family Housing
Hastings Radar Bomb Scoring Site

Hastings Co: Adams NE 68901–
Landholding Agency: Air Force
Property Number: 18199320088
Status: Excess
Reason: Contamination.

Bldg. 555
Hastings Family Housing
Hastings Radar Bomb Scoring Site
Hastings Co: Adams NE 68901–
Landholding Agency: Air Force
Property Number: 18199320089
Status: Excess
Reason: Contamination.

Bldg. 557
Hastings Family Housing
Hastings Radar Bomb Scoring Site
Hastings Co: Adams NE 68901–
Landholding Agency: Air Force
Property Number: 18199320090
Status: Excess
Reason: Contamination.

Bldg. 558
Hastings Family Housing
Hastings Radar Bomb Scoring Site
Hastings Co: Adams NE 68901–
Landholding Agency: Air Force
Property Number: 18199320091
Status: Excess
Reason: Contamination.

Bldg. 560
Hastings Family Housing
Hastings Radar Bomb Scoring Site
Hastings Co: Adams NE 68901–
Landholding Agency: Air Force
Property Number: 18199320092
Status: Excess
Reason: Contamination.

27 Detached Garages
Hastings Family Housing
Hastings Radar Bomb Scoring Site
Hastings Co: Adams NE 68901–
Landholding Agency: Air Force
Property Number: 18199320093
Status: Excess
Reason: Contamination.

Bldg. 17
Hastings Radar Bomb Scoring Site
Hastings Co: Adams NE 68901–
Landholding Agency: Air Force
Property Number: 18199320094
Status: Excess
Reason: Contamination.

Bldg. 16
Hastings Radar Bomb Scoring Site
Hastings Co: Adams NE 68901–
Landholding Agency: Air Force
Property Number: 18199320095
Status: Excess
Reason: Contamination.

Bldg. 18
Hastings Radar Bomb Scoring Site
Hastings Co: Adams NE 68901–
Landholding Agency: Air Force
Property Number: 18199320096
Status: Excess
Reason: Contamination.

Bldg. 6
Hastings Family Housing
Hastings Radar Bomb Scoring Site
Hastings Co: Adams NE 68901–
Landholding Agency: Air Force
Property Number: 18199320097
Status: Excess
Reason: Contamination.

Bldg. 547
Hastings Family Housing
Hastings Radar Bomb Scoring Site
Hastings Co: Adams NE 68901–
Landholding Agency: Air Force
Property Number: 18199320098
Status: Excess
Reason: Contamination.

Bldg. 604
Hastings Family Housing
Hastings Radar Bomb Scoring Site
Hastings Co: Adams NE 68901–
Landholding Agency: Air Force
Property Number: 18199320099
Status: Excess
Reason: Contamination.

Bldg. 686
Ouffutt Air Force Base
Outffutt Co: Sarpy NE 68113–
Landholding Agency: Air Force
Property Number: 1899510021
Status: Unutilized
Reason: Secured Area.

Bldg. 439
Ouffutt Air Force Base
Outffutt Co: Sarpy NE 68113–
Landholding Agency: Air Force
Property Number: 1899510022
Status: Unutilized
Reason: Secured Area.

Bldg. 606
NE Air National Guard
Lincoln Co: Lancaster NE 68524–1888
Landholding Agency: Air Force
Property Number: 18199720028
Status: Underutilized
Reasons: Floodway; Secured Area.

Bldg. 675
NE Air National Guard
Lincoln Co: Lancaster NE 68524–1888
Landholding Agency: Air Force
Property Number: 18199720029
Status: Unutilized
Reasons: Floodway; Secured Area.

Nevada

Former Weather Service Office
Winnemucca Airport
Winnemucca Co: Humbolt NV 89445–
Landholding Agency: GSA
Property Number: 54199810001
Status: Excess
Reason: Within airport runway clear zone
GSA Number: 9–C–NV–509.

New Hampshire

Bldg. 101
New Boston Air Force Station
Amherst Co: Hillsborough NH 03031–1514
Landholding Agency: Air Force
Property Number: 18199320005
Status: Unutilized
Reasons: Within 2000 ft. of flammable or explosive material.

Bldg. 102
New Boston Air Force Station
Amherst Co: Hillsborough NH 03031–1514
Landholding Agency: Air Force
Property Number: 18199320006
Status: Unutilized
Reasons: Within 2000 ft. of flammable or explosive material.

Bldg. 104
New Boston Air Force Station
Amherst Co: Hillsborough NH 03031–1514
Landholding Agency: Air Force
Property Number: 18199320007
Status: Unutilized
Reasons: Within 2000 ft. of flammable or explosive material.

Bldg. 116
New Boston Air Station
Amherst Co: Hillsborough NH 03031–1514
Landholding Agency: Air Force
Property Number: 18199540016
Status: Unutilized
Reason: Extensive deterioration.

Bldg. 1, ESMT Portsmouth
New Castle Co: Rockingham NH
Landholding Agency: GSA
Property Number: 54199730015
Status: Excess
Reasons: Within 2000 ft. of flammable or explosive material. GSA Number: 1–U–NH–486.

New Mexico

Bldg. 831
833 CSG/DEER
Holloman AFB Co: Otero NM 88330–
Landholding Agency: Air Force
Property Number: 18199130333
Status: Unutilized
Reason: Secured Area.

Bldg. 21
Holloman Air Force Base
Co: Otero NM 88330–
Landholding Agency: Air Force
Property Number: 18199240032
Status: Unutilized
Reason: Secured Area.

Bldg. 80
Holloman Air Force Base
Co: Otero NM 88330–
Landholding Agency: Air Force
Property Number: 18199240033
Status: Unutilized
Reason: Secured Area.

Bldg. 98
Holloman Air Force Base
Co: Otero NM 88330–
Landholding Agency: Air Force
Property Number: 18199240034
Status: Unutilized
Reason: Secured Area.

Bldg. 324
Holloman Air Force Base
Co: Otero NM 88330–
Landholding Agency: Air Force
Property Number: 18199240035
Status: Unutilized
Reason: Secured Area.

Bldg. 598
Holloman Air Force Base
Co: Otero NM 88330–
Landholding Agency: Air Force
Property Number: 18199240036
Status: Unutilized
Reason: Secured Area.

Bldg. 801
Holloman Air Force Base
Co: Otero NM 88330–
Landholding Agency: Air Force
Property Number: 18199240037
Status: Unutilized
Reason: Secured Area.

Bldg. 802
Holloman Air Force Base
Co: Otero NM 88330–
Landholding Agency: Air Force

Property Number: 18199240038
Status: Unutilized
Reason: Secured Area.

Bldg. 1095
Holloman Air Force Base
Co: Otero NM 88330–
Landholding Agency: Air Force
Property Number: 18199240039
Status: Unutilized
Reason: Secured Area.

Bldg. 1096
Holloman Air Force Base
Co: Otero NM 88330–
Landholding Agency: Air Force
Property Number: 18199240040
Status: Unutilized
Reason: Secured Area.

Facility 321
Holloman Air Force Base
Co: Otero NM 88330–
Landholding Agency: Air Force
Property Number: 18199240041
Status: Unutilized
Reason: Secured Area.

Facility 75115
Holloman Air Force Base
Co: Otero NM 88330–
Landholding Agency: Air Force
Property Number: 18199240042
Status: Unutilized
Reason: Secured Area.

Bldg. 874
Holloman Air Force Base
Co: Otero NM 88330–
Landholding Agency: Air Force
Property Number: 18199320041
Status: Unutilized
Reasons: Extensive Deterioration; Secured Area.

Bldg. 1258
Holloman Air Force Base
Co: Otero NM 88330–
Landholding Agency: Air Force
Property Number: 18199320042
Status: Unutilized
Reasons: Extensive Deterioration; Secured Area.

Bldg. 134
Holloman Air Force Base
Co: Otero NM 88330–
Landholding Agency: Air Force
Property Number: 18199430014
Status: Unutilized
Reason: Secured Area.

Bldg. 640
Holloman Air Force Base
Co: Otero NM 88330–
Landholding Agency: Air Force
Property Number: 18199430015
Status: Unutilized
Reason: Secured Area.

Bldg. 703
Holloman Air Force Base
Co: Otero NM 88330–
Landholding Agency: Air Force
Property Number: 18199430016
Status: Unutilized
Reasons: Within airport runway clear zone; Secured Area.

Bldg. 813
Holloman Air Force Base
Co: Otero NM 88330–
Landholding Agency: Air Force
Property Number: 18199430017
Status: Unutilized
Reason: Secured Area.

Bldg. 821
Holloman Air Force Base
Co: Otero NM 88330–
Landholding Agency: Air Force
Property Number: 18199430018
Status: Unutilized
Reason: Secured Area.

Bldg. 829
Holloman Air Force Base
Co: Otero NM 88330–
Landholding Agency: Air Force
Property Number: 18199430019
Status: Unutilized
Reasons: Within airport runway clear zone; Secured Area.

Bldg. 867
Holloman Air Force Base
Co: Otero NM 88330–
Landholding Agency: Air Force
Property Number: 18199430020
Status: Unutilized
Reason: Secured Area.

Bldg. 884
Holloman Air Force Base
Co: Otero NM 88330–
Landholding Agency: Air Force
Property Number: 18199430021
Status: Unutilized
Reasons: Within airport runway clear zone; Secured Area.

Bldg. 886
Holloman Air Force Base
Co: Otero NM 88330–
Landholding Agency: Air Force
Property Number: 18199430022
Status: Unutilized
Reasons: Within airport runway clear zone; Secured Area.

Bldg. 908
Holloman Air Force Base
Co: Otero NM 88330–
Landholding Agency: Air Force
Property Number: 18199430023
Status: Unutilized
Reason: Secured Area.

Bldg. 599
Holloman Air Force Base
Co: Otero NM 88330–
Landholding Agency: Air Force
Property Number: 18199510001
Status: Unutilized
Reason: Secured Area.

Bldg. 600
Holloman AFB
Co: Otero NM 88330–
Landholding Agency: Air Force
Property Number: 181996510002
Status: Unutilized
Reason: Secured Area.

Bldg. 599
Holloman AFB
Co: Otero NM 88330–
Landholding Agency: Air Force
Property Number: 18199610007
Status: Unutilized
Reason: Secured Area.

Bldg. 600
Holloman AFB
Co: Otero NM 88330–
Landholding Agency: Air Force
Property Number: 18199510008
Status: Unutilized
Reason: Secured Area.

Bldg. 995
Holloman AFB
Co: Otero NM 88330–
Landholding Agency: Air Force
Property Number: 18199610009
Status: Unutilized
Reason: Secured Area.

Bldg. 1257
Holloman AFB
Co: Otero NM 88330–
Landholding Agency: Air Force
Property Number: 18199740012
Status: Unutilized
Reason: Secured Area.

Bldg. 332
Holloman AFB
Co: Otero NM 88330–
Landholding Agency: Air Force
Property Number: 18199740013
Status: Unutilized
Reasons: Within 2000 ft. of flammable or explosive material. Secured Area.

Bldg. 205
Holloman AFB
Co: Otero NM 88330–
Landholding Agency: Air Force
Property Number: 18199740014
Status: Unutilized
Reasons: Within 2000 ft. of flammable or explosive material. Secured Area.

Bldg. 1089
Holloman AFB
Co: Otero NM 88330–
Landholding Agency: Air Force
Property Number: 18199830009
Status: Unutilized
Reason: Secured Area.

Bldg. 2149
Holloman AFB
Co: Otero NM 88330–
Landholding Agency: Air Force
Property Number: 18199830010
Status: Unutilized
Reasons: Within 2000 ft. of flammable or explosive material. Secured Area.

Bldg. 2151
Holloman AFB
Co: Otero NM 88330–
Landholding Agency: Air Force
Property Number: 18199830011
Status: Unutilized
Reasons: Within 2000 ft. of flammable or explosive material: Secured Area.

Bldg. 2176
Holloman AFB
Co: Otero NM 88330–
Landholding Agency: Air Force
Property Number: 18199830012
Status: Unutilized
Reasons: Within 2000 ft. of flammable or explosive material: Secured Area.

Bldg. 2178
Holloman AFB
Co: Otero NM 88330–
Landholding Agency: Air Force
Property Number: 18199830013
Status: Unutilized
Reasons: Within 2000 ft. of flammable or explosive materialsP'Secured Area.

New York

Bldg. 626 (Pin: RVKQ)
Niagara Falls International Airport
914th Tactical Airlift Group

Niagara Falls Co: Niagara NY 14303–5000
Landholding Agency: Air Force
Property Number: 18199010075
Status: Unutilized
Reasons: Within 2000 ft. of flammable or explosive material; Secured Area.

Bldg. 272
Griffiss Air Force Base
Rome Co: Oneida NY 13441–
Landholding Agency: Air Force
Property Number: 18199140022
Status: Excess
Reason: Secured Area.

Bldg. 888
Griffiss Air Force Base
Rome Co: Oneida NY 13441–
Landholding Agency: Air Force
Property Number: 181999140023
Status: Excess
Reason: Secured Area.

Facility 814, Griffiss AFB
NE of Weapons Storage Area
Rome Co: Oneida NY 13441–
Landholding Agency: Air Force
Property Number: 18199230001
Status: Excess
Reasons: Within airport runway clear zone; Secured Area.

Facility 808, Griffiss AFB
Perimeter Road
Rome Co: Oneida NY 13441–
Landholding Agency: Air Force
Property Number: 18199230002
Status: Excess
Reasons: Within airport runway clear zone; Secured Area.

Facility 807, Griffiss AFB
Perimeter Road
Rome Co: Oneida NY 13441–
Landholding Agency: Air Force
Property Number: 18199230003
Status: Excess
Reasons: Within airport runway clear zone; Secured Area.

Facility 126
Griffiss Air Force Base
Hanger Road
Rome Co: Oneida NY 13441–4520
Landholding Agency: Air Force
Property Number: 18199240020
Status: Unutilized
Reason: Secured Area.

Facility 127
Griffiss Air Force Base
Hanger Road
Rome Co: Oneida NY 13441–4520
Landholding Agency: Air Force
Property Number: 18199240021
Status: Unutilized
Reason: Secured Area.

Facility 135
Griffiss Air Force Base
Hanger Road
Rome Co: Oneida NY 13441–4520
Landholding Agency: Air Force
Property Number: 18199240022
Status: Unutilized
Reason: Secured Area.

Facility 137
Griffiss Air Force Base
Otis Street
Rome Co: Oneida NY 13441–4520
Landholding Agency: Air Force
Property Number: 18199240023
Status: Unutilized
Reason: Secured Area.

Facility 138
Griffiss Air Force Base
Otis Street
Rome Co: Oneida NY 13441–4520
Landholding Agency: Air Force
Property Number: 18199240024
Status: Unutilized
Reason: Secured Area.

Facility 173
Griffiss Air Force Base
Selfridge Street
Rome Co: Oneida NY 13441–4520
Landholding Agency: Air Force
Property Number: 18199240025
Status: Unutilized
Reason: Secured Area.

Facility 261
Griffiss Air Force Base
McDill Street
Rome Co: Oneida NY 13441–4520
Landholding Agency: Air Force
Property Number: 18199240026
Status: Unutilized
Reason: Secured Area.

Facility 308
Griffiss Air Force Base
205 Chanute Street
Rome Co: Oneida NY 13441–4520
Landholding Agency: Air Force
Property Number: 18199240027
Status: Unutilized
Reason: Secured Area.

Facility 1200
Griffiss Air Force Base
Donaldson Road
Rome Co: Oneida NY 13441–4520
Landholding Agency: Air Force
Property Number: 18199240028
Status: Unutilized
Reason: Secured Area.

Facility 841
Griffiss Air Force Base
Rome Co: Oneida NY 13441–4520
Landholding Agency: Air Force
Property Number: 18199330097
Status: Unutilized
Reasons: Secured Area.

Bldg. 740
Niagara Falls Air Force
Reserve
Niagara Falls Co: Niagara NY 14304–5001
Landholding Agency: Air Force
Property Number: 18199720026
Status: Unutilized
Reasons: Within airport runway clear zone; Floodway; Secured Area.

Bldg. 629
Hancock Field
Syracuse Co: Onondaga NY 13211–
Landholding Agency: Air Force
Property Number: 1819973006
Status: Unutilized
Reasons: Within 2000 ft. of flammable or explosive material. Secured Area.

Bldg. 604
Hancock Field
Syracuse Co: Onondaga NY 13211–
Landholding Agency: Air Force
Property Number: 18199810016
Status: Unutilized
Reasons: Within 2000 ft. of flammable or explosive material. Secured Area.

Bldg. 606
Hancock Field
Syracuse Co: Onondaga NY 13211–
Landholding Agency: Air Force
Property Number: 18199810017
Status: Unutilized
Reasons: Within 2000 ft. of flammable or explosive material. Secured Area.

Bldg. 615
Hancock Field
Syracuse Co: Onondaga NY 13211–
Landholding Agency: Air Force
Property Number: 18199810018
Status: Unutilized
Reasons: Within 2000 ft. of flammable or explosive material. Secured Area.

Bldg. 629
Hancock Field
Syracuse Co: Onondaga NY 13211–
Landholding Agency: Air Force
Property Number: 18199810019
Status: Unutilized
Reasons: Within 2000 ft. of flammable or explosive material. Secured Area.

Bldg. 630
Hancock Field
Syracuse Co: Onondaga NY 13211–
Landholding Agency: Air Force
Property Number: 18199810020
Status: Unutilized
Reasons: Within 2000 ft. of flammable or explosive material. Secured Area.

Bldg. 635
Hancock Field
Syracuse Co: Onondaga NY 13211–
Landholding Agency: Air Force
Property Number: 18199810021
Status: Unutilized
Reasons: Within 2000 ft. of flammable or explosive material. Secured Area.

Bldg. 640
Hancock Field
Syracuse Co: Onondaga NY 13211–
Landholding Agency: Air Force
Property Number: 18199810022
Status: Unutilized
Reasons: Within 2000 ft. of flammable or explosive material; Secured Area.

Bldg. 733
Hancock Field
Syracuse Co: Onondaga NY 13211–
Landholding Agency: Air Force
Property Number: 18199810023
Status: Unutilized
Reasons: Within 2000 ft. of flammable or explosive material Secured Area.

Bldg. 514
Niagara Falls ARS
Niagara Falls Co: Niagara NY 14304–5001
Landholding Agency: Air Force
Property Number: 18199810024
Status: Unutilized
Reasons: Floodway; Secured Area; Extensive deterioration.

Bldg. 614
Niagara Falls AFR
Niagara Falls Co: Niagara NY 14305–5001
Landholding Agency: Air Force
Property Number: 18199830014
Status: Unutilized
Reasons: Within 2000 ft. of flammable or explosive material; Secured Area; Extensive deterioration.

Bldg. 722

Niagara Falls AFR
Niagara Falls Co: Niagara NY 14305–5001
Landholding Agency: Air Force
Property Number: 18199830015
Status: Unutilized
Reasons: Within 2000 ft. of flammable or explosive material; Secured Area; Extensive deterioration.

Bldg. 750
Niagara Falls AFR
Niagara Falls Co: Niagara NY 14305–5001
Landholding Agency: Air Force
Property Number: 18199830016
Status: Unutilized
Reasons: Within 2000 ft. of flammable or explosive material; Secured Area; Extensive deterioration.

Bldg. 751
Niagara Falls AFR
Niagara Falls Co: Niagara NY 14305–5001
Landholding Agency: Air Force
Property Number: 18199830017
Status: Unutilized
Reasons: Within 2000 ft. of flammable or explosive material; Secured Area; Extensive deterioration.

Bldg. P–1
Glen Falls Reserve Center
Glen Falls Co: Warren NY 12801–
Location: 67–73 Warren Street
Landholding Agency: GSA
Property Number: 21199540015
Status: Excess
Reason: Extensive deterioration
GSA Number: 1–D–NY–865.

Warehouse
Whitney Lake Project
Whitney Point Co: Broome NY 13862–0706
Landholding Agency: COE
Property Number: 31199630007
Status: Unutilized
Reason: Extensive deterioration.

2 Offshore Lighthouses
Great Lakes NY
Landholding Agency: GSA
Property Number: 54199630015
Status: Excess
Reason: Extensive deterioration.

Galloo Island Light
Lake Ontario
Hounsfield Co: Jefferson NY
Landholding Agency: GSA
Property Number: 54199740016
Status: Excess
Reason: Inaccessible
GSA Number: 1–U–NY–735C.

Point AuRoche Light
Beekmantown Co: Clinton NY 12901–
Landholding Agency: GSA
Property Number: 87199420002
Status: Excess
Reasons: Floodway; Extensive deterioration.
GSA Number: 2–4–NY–817.

North Carolina

Bldg. 4230—Youth Center
Cannon Ave.
Goldsboro Co: Wayne NC 27531–5005
Landholding Agency: Air Force
Property Number: 18199120233
Status: Underutilized
Reason: Secured Area.

Bldg. 607, Pope Air Force Base
Fayetteville Co: Cumberland NC 28308–2890
Landholding Agency: Air Force
Property Number: 18199330041
Status: Underutilized
Reasons: Secured Area; Extensive deterioration.

Bldg. 910, Pope Air Force Base
Fayetteville Co: Cumberland NC 28308–2003
Landholding Agency: Air Force
Property Number: 18199420022
Status: Underutilized
Reasons: Secured Area; Extensive deterioration.

Bldg.912, Pope Air Force Base
Fayetteville Co: Cumberland NC 28308–2003
Landholding Agency: Air Force
Property Number: 18199420023
Status: Underutilized
Reasons: Secured Area; Extensive deterioration.

Bldg. 914, Pope Air Force Base
Fayetteville Co: Cumberland NC 28308–2003
Landholding Agency: Air Force
Property Number: 18199420024
Status: Underutilized
Reasons: Secured Area; Extensive deterioration.

Bldg. 633, Pope Air Force Base
Fayetteville Co: Cumberland NC 28308–
Landholding Agency: Air Force
Property Number: 18199540019
Status: Underutilized
Reasons: Secured Area; Extensive deterioration.

North Dakota

Bldg. 422
Minot Air Force Base
Minot Co: Ward ND 58705–
Landholding Agency: Air Force
Property Number: 18199010724
Status: Underutilized
Reason: Secured Area.

Bldg. 50
Fortuna Air Force Station
Extreme northwestern corner of North Dakota
Fortuna Co: Divide ND 58844–
Landholding Agency: Air Force
Property Number: 18199310107
Status: Excess
Reason: Garbage incinerator.

Bldg. 119
Minot Air Force Base
Minot Co: Ward ND 58701–
Landholding Agency: Air Force
Property Number: 18199320034
Status: Underutilized
Reason: Secured Area.

Bldg. 526
Minot Air Force Base
Minot Co: Ward ND 58701–
Landholding Agency: Air Force
Property Number: 18199320038
Status: Underutilized
Reason: Secured Area.

Bldg. 895
Minot Air Force Base
Minot Co: Ward ND 58701–
Landholding Agency: Air Force
Property Number: 18199320039
Status: Underutilized
Reason: Secured Area.

Ohio

14 Bldgs.
Area B, Wright-Patterson AFB
Co: Montgomery OH 45433–
Location: 6036, 38, 42, 44, 45, 49, 54, 64, 69, 75
Landholding Agency: Air Force
Property Number: 18199820030
Status: Underutilized
Reason: Within airport runway clear zone.

Bldg. 6104, 08, 09
Area B, Wright-Patterson AFB
Co: Montgomery OH 45433–
Landholding Agency: Air Force
Property Number: 18199820044
Status: Underutilized
Reason: Within airport runway clear zone.

Lab
Ohio River Division
Laboratories
Mariemont Co: Hamilton OH 15227–4217
Landholding Agency: COE
Property Number: 31199510002
Status: Underutilized
Reason: Secured Area.

Storage Facility
Ohio River Division
Laboratories
Mariemont Co: Hamilton OH 15227–4217
Landholding Agency: COE
Property Number: 31199510003
Status: Underutilized
Reason: Secured Area.

Office Building
Ohio River Division
Laboratories
Mariemont Co: Hamilton OH 15227–4217
Landholding Agency: COE
Property Number: 31199510004
Status: Unutilized
Reason: Secured Area.

Toledo Harbor Lighthouse
Lake Erie
Toledo Co: Lucas OH 43611–
Landholding Agency: GSA
Property Number: 54199710014
Status: Excess
Reason: Inaccessible; GSA Number: 1–U–OH–801.

Toledo Federal Building
234 Summit Avenue
Toledo Co: Lucas OH 43604–
Landholding Agency: GSA
Property Number: 54199810014
Status: Excess
Reasons: Within 2000 ft. of flammable or explosive material; GSA Number: 1–G–H–804.

Oklahoma

Bldg. 010
Tulsa IAP Base
Tulsa OK 74115–1699
Landholding Agency: Air Force
Property Number: 18199820031
Status: Unutilized
Reasons: Within 2000 ft. of flammable or explosive material; Secured Area.

Bldg. 305
Tulsa IAP Base
Tulsa OK 74115–1699
Landholding Agency: Air Force
Property Number: 18199820032
Status: Unutilized
Reasons: Within 2000 ft. of flammable or explosive material; Secured Area.

Bldg. 310
Tulsa IAP Base
Tulsa OK 74115–1699

Landholding Agency: Air Force
Property Number: 18199820033
Status: Unutilized
Reasons: Within 2000 ft. of flammable or explosive material; Secured Area.

Bldg. 502
Max Westheimer Field
Norman Co: Cleveland OK 73069–
Landholding Agency: GSA
Property Number: 54199840005
Status: Excess
Reasons: Within 2000 ft. of flammable or explosive material; GSA Number: 7–D–K–405–B.

Oregon

Portion, Former Kingsley Field
Air Force Base
Arnold Ave. & Joe Wright Rd.
Klamath Falls Co: Klamath OR 97603–
Landholding Agency: GSA
Property Number: 54199810003
Status: Unutilized
Reasons: Within 2000 ft. of flammable or explosive material; GSA Number: 10–D–OR–434–J.

Troutdale Materials Lab
Troutdale Co: Multnomah OR 97060–9501
Landholding Agency: GSA
Property Number: 54199830009
Status: Surplus
Reasons: Within 2000 ft. of flammable or explosive material; GSA Number: 9–D–OR–729.

Puerto Rico

Dry Dock & Ship Repair Fac.
U.S. Navy
San Juan PR
Landholding Agency: GSA
Property Number: 54199710012
Status: Excess
Reasons: Within 2000 ft. of flammable or explosive material; Floodway; GSA Number: 1–N–PR–491.

NIH Primate Research Facility
Sabena Seca PR
Landholding Agency: GSA
Property Number: 54199720021
Status: Excess
Reason: Landlocked; GSA Number: 1–H–PR–503.

South Dakota

Bldg. 200, South Nike Ed Annex
Ellsworth Air Force Base
Ellsworth AFB Co: Pennington SD 57706–
Landholding Agency: Air Force
Property Number: 18199320048
Status: Unutilized
Reason: Extensive Deterioration.

Bldg. 201, South Nike Ed Annex
Ellsworth Air Force Base
Ellsworth AFB Co: Pennington SD 57706–
Landholding Agency: Air Force
Property Number: 18199320049
Status: Unutilized
Reason: Extensive Deterioration.

Bldg. 203, South Nike Ed Annex
Ellsworth Air Force Base
Ellsworth AFB Co: Pennington SD 57706–
Landholding Agency: Air Force
Property Number: 18199320050
Status: Unutilized
Reason: Extensive Deterioration.

Bldg. 204, South Nike Ed Annex
Ellsworth Air Force Base
Ellsworth AFB Co: Pennington SD 57706–
Landholding Agency: Air Force
Property Number: 18199320051
Status: Unutilized
Reason: Extensive Deterioration.

Bldg. 205, South Nike Ed Annex
Ellsworth Air Force Base
Ellsworth AFB Co: Pennington SD 57706–
Landholding Agency: Air Force
Property Number: 18199320052
Status: Unutilized
Reason: Extensive Deterioration.

Bldg. 206, South Nike Ed Annex
Ellsworth Air Force Base
Ellsworth AFB Co: Pennington SD 57706–
Landholding Agency: Air Force
Property Number: 18199320053
Status: Unutilized
Reason: Extensive Deterioration.

Bldg. 88470
Ellsworth Air Force Base
Ellsworth AFB Co: Meade SD 57706–
Landholding Agency: Air Force
Property Number: 18199340033
Status: Unutilized
Reasons: Within 2000 ft. of flammable or explosive materials. Secured Area.

Bldg. 7506
Ellsworth Air Force Base
Ellsworth AFB Co: Meade SD 57706–
Landholding Agency: Air Force
Property Number: 18199340037
Status: Unutilized
Reason: Secured Area.

Bldg. 111
Ellsworth Air Force Base
Ellsworth AFB Co: Meade SD 57706–
Landholding Agency: Air Force
Property Number: 18199730007
Status: Unutilized
Reason: Secured Area.

Bldg. 7530
Ellsworth AFB
Ellsworth AFB Co: Meade SD 57706–
Landholding Agency: Air Force
Property Number: 18199810025
Status: Unutilized
Reason: Secured Area.

Bldg. 7504
Ellsworth AFB
Co: Meade SD 57706–
Landholding Agency: Air Force
Property Number: 18199820034
Status: Underutilized
Reasons: Within 2000 ft. of flammable or explosive material; Within airport runway clear zone; Secured Area.

Bldg. 4001
Ellsworth AFB
Co: Meade SD 57706–
Landholding Agency: Air Force
Property Number: 18199820035
Status: Unutilized
Reason: Secured Area.

Bldg. 7239
Ellsworth AFB
Co: Meade SD 57706–
Landholding Agency: Air Force
Property Number: 18199820036
Status: Unutilized
Reasons: Within 2000 ft. of flammable or explosive material; Within airport runway clear zone; Secured Area.

Bldg. 1102
Ellsworth AFB
Co: Meade SD 57706–
Landholding Agency: Air Force
Property Number: 18199820037
Status: Unutilized
Reason: Secured Area.

Bldg. 88307
Ellsworth AFB
Co: Meade SD 57706–
Landholding Agency: Air Force
Property Number: 18199820038
Status: Unutilized
Reasons: Within 2000 ft. of flammable or explosive material; Secured Area.

Bldg. 88320
Ellsworth AFB
Co: Meade SD 57706–
Landholding Agency: Air Force
Property Number: 18199820039
Status: Unutilized
Reasons: Within 2000 ft. of flammable or explosive material; Secured Area.

Tennessee

Bldg. 204
Cordell Hull Lake and Dam Project
Defeated Creek Recreation Area
Carthage Co: Smith TN 37030–
Location: US Highway 85
Landholding Agency: COE
Property Number: 31199011499
Status: Unutilized
Reason: Floodway.

Tract 2618 (Portion)
Cordell Hull Lake and Dam Project
Roaring River Recreation Area
Gainesboro Co: Jackson TN 38562–
Location: TN Highway 135
Landholding Agency: COE
Property Number: 31199011503
Status: Underutilized
Reason: Floodway.

Water Treatment Plant
Dale Hollow Lake & Dam Project
Obey River Park, State Hwy 42
Livingston Co: Clay TN 38351–
Landholding Agency: COE
Property Number: 31199140011
Status: Excess
Reason: Water treatment plant.

Water Treatment Plant
Dale Hollow Lake & Dam Project
Lillydale Recreation Area, State Hwy 53
Livingston Co: Clay TN 38351–
Landholding Agency: COE
Property Number: 31199140012
Status: Excess
Reason: Water treatment plant.

Water Treatment Plant
Dale Hollow Lake & Dam Project
Willow Grove Recreational Area, State Hwy 53
Livingston Co: Clay TN 38351–
Landholding Agency: COE
Property Number: 31199140013
Status: Excess
Reason: Water treatment plant.

Utah

Bldg. 789
Hill Air Force Base
(See County) Co: Davis UT 84056–
Landholding Agency: Air Force
Property Number: 18199040859

Status: Unutilized
Reasons: Within airport runway clear zone, Secured Area.

Vermont

Facility 100
Burlington IAP
Burlington Co: Chittenden VT 05403–5872
Landholding Agency: Air Force
Property Number: 18199730008
Status: Excess
Reasons: Within 2000 ft. of flammable or explosive material.

Bldg. 95
Burlington IAP
S. Burlington Co: Chittenden VT
Landholding Agency: Air Force
Property Number: 18199820040
Status: Unutilized
Reasons: Within 2000 ft. of flammable or explosive material.

Bldg. 220
Burlington IAP
S. Burlington Co: Chittenden VT
Landholding Agency: Air Force
Property Number: 18199820041
Status: Unutilized
Reason: Secured Area.

Bldg. 381
Burlington IAP
S. Burlington Co: Chittenden VT
Landholding Agency: Air Force
Property Number: 18199820042
Status: Unutilized
Reason: Secured Area.

Bldg. 379
Burlington IAP
S. Burlington Co: Chittenden VT
Landholding Agency: Air Force
Property Number: 18199820043
Status: Unutilized
Reason: Secured Area.

Virginia

Bldg. 417
Camp Pendleton
Virginia Beach VA 23451–
Landholding Agency: Air Force
Property Number: 18199710003
Status: Unutilized
Reason: Extensive deterioration.

Bldg. 418
Camp Pendleton
Virginia Beach VA 23451–
Landholding Agency: Air Force
Property Number: 18199710004
Status: Unutilized
Reason: Extensive deterioration.

Washington

Bldg. 100, Geiger Heights
Grove and Hallet Streets
Fairchild AFB Co: Spokane WA 99204–
Landholding Agency: Air Force
Property Number: 18199210004
Status: Unutilized
Reason: Extensive deterioration.

Bldg. 2000
Fairchild Air Force Base
Fairchild AFB Co: Spokane WA 99011–
Landholding Agency: Air Force
Property Number: 18199310058
Status: Unutilized
Reasons: Within 2000 ft. of flammable or explosive material, Secured Area.

Facility 2450
Fairchild Air Force Base
Fairchild AFB Co: Spokane WA 99011–
Landholding Agency: Air Force
Property Number: 18199310065
Status: Unutilized
Reasons: Within 2000 ft. of flammable or explosive material, Secured Area.

Bldg. 1, Waste Annex
West of Craig Road
Co: Spokane WA 99022–
Landholding Agency: Air Force
Property Number: 18199320043
Status: Unutilized
Reason: Secured Area.

Everett Federal Building
3002 Colby Avenue
Everett Co: Snohomish WA 98201–
Landholding Agency: GSA
Property Number: 54199730026
Status: Underutilized
Reasons: Within 2000 ft. of flammable or explosive material
GSA Number: 9–G–WA–1140.

Bldg. 844
Former Park Place Enlisted Club
808 Burwell St.
Bremerton Co: Kitsap WA 98314–
Landholding Agency: GSA
Property Number: 54199840002
Status: Excess
Reasons: Within 2000 ft. of flammable or explosive material
GSA Number: 9–D–WA–1164.

Wisconsin

2 Offshore Lighthouses
Great Lakes WI
Landholding Agency: GSA
Property Number: 54199630016
Status: Excess
Reason: Extensive deterioration.

Wyoming

Bldg. 31
F. E. Warren Air Force Base
Cheyenne Co. Laramie WY 82005–
Landholding Agency: Air Force
Property Number: 18199010198
Status: Unutilized
Reason: Secured Area.

Bldg. 34
F.E. Warren Air Force Base
Cheyenne Co: Laramie WY 82005–
Landholding Agency: Air Force
Property Number: 18199010199
Status: Underutilized
Reason: Secured Area.

Bldg. 37
F.E. Warren Air Force Base
Cheyenne Co: Laramie WY 82005–
Landholding Agency: Air Force
Property Number: 18199010200
Status: Unutilized
Reason: Secured Area.

Bldg. 284
F.E. Warren Air Force Base
Cheyenne Co: Laramie WY 82005–
Landholding Agency: Air Force
Property Number: 18199010201
Status: Unutilized
Reason: Secured Area.

Bldg. 385
F.E. Warren Air Force Base
Cheyenne Co: Laramie WY 82005–
Landholding Agency: Air Force
Property Number: 18199010202
Status: Unutilized
Reason: Secured Area.

Bldgs. 2565–2571
F.E. Warren AFB
Cheyenne Co: Laramie WY 82005–5000
Landholding Agency: Air Force
Property Number: 18199720001
Status: Unutilized
Reasons: Secured Area, Extensive deterioration.

Bldgs. 2564–2572
F.E. Warren AFB
Cheyenne Co: Laramie WY 82005–500
Landholding Agency: Air Force
Property Number: 18199720002
Status: Unutilized
Reasons: Secured Area, Extensive deterioration.

9 Bldgs.
F.E. Warren AFB
2982–2986, 2989, 2991, 2994–2995
Cheyenne Co: Laramie WY 82005–5000
Landholding Agency: Air Force
Property Number: 18199720003
Status: Unutilized
Reasons: Secured Area, Extensive deterioration.

6 Bldgs.
F.E. Warren AFB
2768, 2772, 2773, 2993, 2980, 2988
Cheyenne Co: Laramie WY 82005–5000
Landholding Agency: Air Force
Property Number: 18199720004
Status: Unutilized
Reasons: Secured Area, Extensive deterioration.

8 Bldgs.
F.E. Warren AFB
2784, 2762–2764, 2769, 2775, 2777, 2981
Cheyenne Co: Laramie WY 82005–5000
Landholding Agency: Air Force
Property Number: 18199720005
Status: Unutilized
Reasons: Secured Area, Extensive deterioration.

8 Bldgs.
F.E. Warren AFB
2785–2786, 2770–2771, 2774, 2776, 2990, 2992
Cheyenne Co: Laramie WY 82005–5000
Landholding Agency: Air Force
Property Number: 18199720006
Status: Unutilized
Reasons: Secured Area, Extensive deterioration.

Bldgs. 2460–2468
F.E. Warren AFB
Cheyenne Co: Laramie WY 82005–5000
Landholding Agency: Air Force
Property Number: 18199830018
Status: Unutilized
Reasons: Secured Area, Extensive deterioration.

9 Bldgs.
F.E. Warren AFB
Cheyenne Co: Laramie WY 82005–5000
Location: 2469, 2470, 2508–2511, 2520, 2523, 2528
Landholding Agency: Air Force
Property Number: 18199830019
Status: Unutilized
Reasons: Secured Area, Extensive deterioration.

9 Bldgs.
F.E. Warren AFB
Cheyenne Co: Laramie WY 82005–5000
Location: 2471–2472, 2502, 2504–2507, 2544
Landholding Agency: Air Force
Property Number: 18199830020
Status: Unutilized
Reasons: Secured Area, Extensive deterioration.

8 Bldgs.
F.E. Warren AFB
Cheyenne Co: Laramie WY 82005–5000
Location: 2473, 2500, 2503, 2547, 2557, 2601, 2613, 2625
Landholding Agency: Air Force
Property Number: 18199830021
Status: Unutilized
Reasons: Secured Area, Extensive deterioration.

9 Bldgs.
F.E. Warren AFB
Cheyenne Co: Laramie WY 82005–5000
Location: 2512, 2514–2517, 2418, 2519, 2524, 2525
Landholding Agency: Air Force
Property Number: 18199830022
Status: Unutilized
Reasons: Secured Area, Extensive deterioration.

9 Bldgs.
F.E. Warren AFB
Cheyenne Co: Laramie WY 82005–5000
Location: 2513, 2530, 2537, 2606, 2626, 2700, 2707, 2720, 2750
Landholding Agency: Air Force
Property Number: 18199830023
Status: Unutilized
Reasons: Secured Area, Extensive deterioration.

9 Bldgs.
F.E. Warren AFB
Cheyenne Co: Laramie WY 82005–5000
Location: 2526, 2527, 2532–2534, 2439, 2608, 2610, 2612
Landholding Agency: Air Force
Property Number: 18199830024
Status: Unutilized
Reasons: Secured Area, Extensive deterioration.

9 Bldgs.
F.E. Warren AFB
Cheyenne Co: Laramie WY 82005–5000
Location: 2529, 2531, 2535–2536, 2538, 2540–2543
Landholding Agency: Air Force
Property Number: 18199830025
Status: Unutilized
Reasons: Secured Area, Extensive deterioration.

9 Bldgs.
F.E. Warren AFB
Cheyenne Co: Laramie WY 82005–5000
Location: 2545, 2546, 2548–2554
Landholding Agency: Air Force
Property Number: 18199830026
Status: Unutilized
Reasons: Secured Area, Extensive deterioration.

9 Bldgs.
F.E. Warren AFB
Cheyenne Co: Laramie WY 82005–5000
Location: 2555, 2556, 2558, 2559, 2603, 2605, 2607, 2609, 2611
Landholding Agency: Air Force
Property Number: 18199830027
Status: Unutilized
Reasons: Secured Area, Extensive deterioration.

9 Bldgs.
F.E. Warren AFB
Cheyenne Co: Laramie WY 82005–5000
Location: 2560, 2561, 2600, 2602, 2604, 2701, 2702, 2704, 2705
Landholding Agency: Air Force
Property Number: 18199830028
Status: Unutilized
Reasons: Secured Area, Extensive deterioration.

9 Bldgs.
F.E. Warren AFB
Cheyenne Co: Laramie WY 82005–5000
Location: 2614, 2616, 2618, 2620, 2622, 2624, 2714, 2718, 2722
Landholding Agency: Air Force
Property Number: 18199830029
Status: Unutilized
Reasons: Secured Area, Extensive deterioration.

9 Bldgs.
F.E. Warren AFB
Cheyenne Co: Laramie WY 82005–5000
Location: 2615, 2617, 2619, 2621, 2623, 2627
Landholding Agency: Air Force
Property Number: 18199830030
Status: Unutilized
Reasons: Secured Area, Extensive deterioration.

9 Bldgs.
F.E. Warren AFB
Cheyenne Co: Laramie WY 82005–5000
Location: 2706, 2708–2713, 2715, 2716
Landholding Agency: Air Force
Property Number: 18199830031
Status: Unutilized
Reasons: Secured Area, Extensive deterioration.

9 Bldgs.
F.E. Warren AFB
Cheyenne Co: Laramie WY 82005–5000
Location: 2717, 2719, 2721, 2727, 2728, 2751, 2753, 2757, 2759
Landholding Agency: Air Force
Property Number: 18199830032
Status: Unutilized
Reasons: Secured Area, Extensive deterioration.

10 Bldgs.
F.E. Warren AFB
Cheyenne Co: Laramie WY 82005–5000
Location: 2723–2726, 2752, 2754–2756, 2758, 2703
Landholding Agency: Air Force
Property Number: 18199830033
Status: Unutilized
Reasons: Secured Area, Extensive deterioration.

4 Bldgs.
F.E. Warren AFB
Cheyenne Co: Laramie WY 82005–5000
Location: 2739, 2740, 2760, 2761
Landholding Agency: Air Force
Property Number: 18199830034
Status: Unutilized
Reasons: Secured Area, Extensive deterioration.

Land (by State)

Alaska

Champion Air Force Station
21 CSG/DEER
Elmendorf AFB Co: Anchorage AK 99506–5000
Landholding Agency: Air Force
Property Number: 18199010430
Status: Unutilized
Reasons: Isolated area, Not accessible by road, isolated and remote area; Arctic environ.

Lake Louise Recreation
21 CSG–DEER
Elmendorf AFB Co: Anchorage AK 99506–5000
Landholding Agency: Air Force
Property Number: 18199010431
Status: Unutilized
Reasons: Isolated area, Not accessible by road, isolated and remote area; Arctic coast.

Nikolski Radio Relay Site
21 CSG/DEER
Elmendorf AFB Co: Anchorage AK 99506–5000
Landholding Agency: Air Force
Property Number: 18199010432
Status: Unutilized
Reasons: Isolated area, Not accessible by road, Isolated and remote area; Arctic coast.

California

Parcel B
Santa Rosa Co: Sonoma CA
Landholding Agency: GSA
Property Number: 54199310016
Status: Excess
Reason: Sewage Treatment Plant
GSA Number: 9–G–CA–580C.

Florida

Land
MacDill Air Force Base
6601 S. Manhattan Avenue
Tampa Co: Hillsborough FL 33608–
Landholding Agency: Air Force
Property Number: 18199030003
Status: Excess
Reason: Floodway.

Georgia

Tract D–415
Lake Sidney Lanier
Gainesville Co: Hall GA 30501–
Landholding Agency: GSA
Property Number: 54199910011
Status: Excess
Reason: No public access
GSA Number: 4–D–GA–731.

Guam

Submerged Lands
Ritidian Point GU
Landholding Agency: GSA
Property Number: 54199640003
Status: Excess
Reason: Inaccessible
GSA Number: 9–N–GU–437.

Kentucky

Tract 4626
Barkley, Lake, Kentucky and Tennessee
Donaldson Creek Launching Area
Cadiz Co: Trigg KY 42211–
Location: 14 miles from US Highway 68.
Landholding Agency: COE
Property Number: 31199010030
Status: Underutilized

Reason: Floodway.

Tract AA–2747
Wolf Creek Dam and Lake Cumberland
US HWY. 27 to Blue John Road
Burnside Co: Pulaski KY 42519–
Landholding Agency: COE
Property Number: 31199010038
Status: Underutilized
Reason: Floodway.

Tract AA–2726
Wolf Creek Dam and Lake Cumberland
KY HWY. 80 to Route 769
Burnside Co: Pulaski KY 42519–
Landholding Agency: COE
Property Number: 31199010039
Status: Underutilized
Reason: Floodway.

Tract 1358
Barkley, Lake, Kentucky and Tennessee
Eddyville Recreation Area
Eddyville Co: Lyon KY 42038–
Location: US Highway 62 to state highway 93.
Landholding Agency: COE
Property Number: 31199010043
Status: Excess
Reason: Floodway.

Red River Lake Project
Stanton Co: Powell KY 40380–
Location: Exit Mr. Parkway at the Stanton and Slade Interchange, then take SR Hand 15 north to SR 613.
Landholding Agency: COE
Property Number: 31199011684
Status: Underutilized
Reason: Floodway.

Barren River Lock & Dam No. 1
Richardsville Co: Warren KY 42270–
Landholding Agency: COE
Property Number: 31199120008
Status: Unutilized
Reason: Floodway.

Green River Lock & Dam No. 3
Rochester Co: Butler KY 42273–
Location: Off State Hwy. 369, which runs off of Western Ky. Parkway
Landholding Agency: COE
Property Number: 31199120009
Status: Unutilized
Reason: Floodway.

Green River Lock & Dam No. 4
Woodbury Co: Butler KY 42288–
Location: Off State Hwy. 403, which is off State Hwy 231
Landholding Agency: COE
Property Number: 31199120014
Status: Underutilized
Reason: Floodway.

Green River Lock & Dam No. 5
Readville Co: Butler KY 42275–
Location: Off State Highway 185
Landholding Agency: COE
Property Number: 31199120015
Status: Unutilized
Reason: Floodway.

Green River Lock & Dam No. 6
Brownsville Co: Edmonson KY 42210–
Location: Off State Highway 259
Landholding Agency: COE
Property Number: 31199120016
Status: Underutilized
Reason: Floodway.

Vacant Land west of locksite
Greenup Locks and Dam
5121 New Dam Road
Rural Co: Greenup KY 42244–
Landholding Agency: COE
Property Number: 31199120017
Status: Unutilized
Reason: Floodway.

Tract 6404, Cave Run Lake
U.S. Hwy 460
Index Co: Morgan KY
Landholding Agency: COE
Property Number: 31199240005
Status: Underutilized
Reason: Floodway.

Tract 6803, Cave Run Lake
State Road 1161
Pomp Co: Morgan KY
Landholding Agency: COE
Property Number: 31199240006
Status: Underutilized
Reason: Floodway.

8.04 acres
Taylorsville Lake Project
Taylorsville Co: Spenser KY 40071–9801
Landholding Agency: COE
Property Number: 31199840003
Status: Unutilized
Reason: Inaccessible.

9 Tracts
Daniel Boone National Forest
Co: Owsley KY 37902–
Landholding Agency: GSA
Property Number: 54199620012
Status: Excess
Reason: Floodway
GSA Number: 4–G–KY–607.

Louisiana

Harrison Lock & Dam No. 2
Harrisonburg Co: Catahoula LA 71340–
Landholding Agency: GSA
Property Number: 54199720003
Status: Excess
Reason: Floodway
GSA Number: 7–D–LA–0552.

Site #18
Forsythe Point
Columbia Lock & Dam
Monroe Co: Ouacita Parish LA 71210–
Landholding Agency: GSA
Property Number: 54199810009
Status: Excess
Reason: Floodway
GSA Number: 7–D–LA–557.

Maryland

Land
Brandywine Storage Annex
1776 ABW/DE Brandywine Road, Route 381
Andrews AFB Co: Prince Georges MD 20613–
Landholding Agency: Air Force
Property Number: 18199010263
Status: Unutilized
Reason: Secured Area.

Tract 131R
Youghiogheny River Lake, Rt. 2, Box 100
Friendsville Co: Garrett MD
Landholding Agency: COE
Property Number: 31199240007
Status: Underutilized
Reason: Floodway.

Michigan

Port/EPA Large Lakes Rsch Lab
Grosse Ile Twp Co: Wayne MI
Landholding Agency: GSA
Property Number: 54199720022
Status: Exesss
Reason: Within airport runway clear zone
GSA Number: 1–Z–MI–544–A.

Minnesota

Parcel G
Pine River
Cross Lake Co: Crow Wing MN 56442–
Location: 3 miles from city of Cross Lake between highways 6 and 371.
Landholding Agency: COE
Property Number: 31199011037
Status: Excess
Reason: Highway right of way.

Mississippi

Parcel 1 Grenada Lake
Section 20
Grenada Co: Grenada MS 38901–0903
Landholding Agency: COE
Property Number: 31199011018
Status: Underutilized
Reason: Within airport runway clear zone.

Missouri

Ditch 19, Item 2, Tract No. 230
St. Francis Basin Project
2½ miles west of Malden
Co: Dunklin MO
Landholding Agency: COE
Property Number: 31199130001
Status: Unutilized
Reason: Floodway.

New Mexico

Facility 75100
Holloman Air Force Base
Co: Otero NM 88330–
Landholding Agency: Air Force
Property Number: 18199240043
Status: Unutilized
Reason: Secured Area.

North Dakota

0.23 acres
Minot Middle Marker Annex
Co: Ward ND 58705–
Landholding Agency: Air Force
Property Number: 18199810001
Status: Unutilized
Reason: Within airport runway clear zone.

Ohio

Mosquito Creek Lake
Everett Hull Road Boat Launch
Cortland Co: Trumbull OH 44410–9321
Landholding Agency: COE
Property Number: 31199440007
Status: Underutilized
Reason: Floodway.

Mosquito Creek Lake
Housel—Craft Rd., Boat Launch
Cortland Co: Trumbull OH 44410–9321
Landholding Agency: COE
Property Number: 31199440008
Status: Underutilized
Reason: Floodway.

36 Site Campground
German Church Campground
Berlin Center Co: Portage OH 44401–9707
Landholding Agency: COE
Property Number: 31199810001
Status: Unutilized
Reason: Floodway.

Lewis Research Center
Cedar Point Road

Cleveland Co: Cuyahoga OH 44135–
Landholding Agency: GSA
Property Number: 54199610007
Status: Excess
Reasons: Within 2000 ft. of flammable or explosive material; Within airport runway clear zone
GSA Number: 2–Z–OH–598–I.

Pennsylvania

Lock and Dam #7
Monongahela River
Greensboro Co: Greene PA
Location: Left hand side of entrance roadway to project.
Landholding Agency: COE
Property Number: 31199011564
Status: Unutilized
Reason: Floodway.

Mercer Recreation Area
Shenango Lake
Transfer Co: Mercer PA 16154–
Landholding Agency: COE
Property Number: 31199810002
Status: Unutilized
Reason: Floodway.

Grays Landing
Tract B, 101–07
Co: Fayette PA
Landholding Agency: GSA
Property Number: 54199810005
Status: Excess
Reason: Landlocked
GSA Number: 4–D–784.

South Dakota

Badlands Bomb Range
60 miles southeast of Rapid City, SD
1½ miles south of Highway 44
Co: Shannon SD
Landholding Agency: Air Force
Property Number: 18199210003
Status: Unutilized
Reason: Secured Area.

Tennessee

Brooks Bend
Cordell Hull Dam and Reservoir
Highway 85 to Brooks Bend Road
Gainesboro Co: Jackson TN 38562–
Location: Tracts 800, 802–806, 835–837, 900–902, 1000–1003, 1025
Landholding Agency: COE
Property Number: 21199040413
Status: Underutilized
Reason: Floodway.

Cheatham Lock and Dam
Highway 12
Ashland City Co: Cheatham TN 37015–
Location: Tracts E–513, E–512–1 and E–512–2
Landholding Agency: COE
Property Number: 21199040415
Status: Underutilized
Reason: Floodway.

Tract 6737
Blue Creek Recreation Area
Barkley Lake, Kentucky and Tennessee
Dover Co: Stewart TN 37058–
Location: U.S. Highway 79/TN Highway 761
Landholding Agency: COE
Property Number: 31199011478
Status: Underutilized
Reason: Floodway.

Tracts 3102, 3105, and 3106
Brimstone Launching Area
Cordell Hull Lake and Dame Project
Gainesboro Co: Jackson TN 38562–
Location: Big Bottom Road
Landholding Agency: COE
Property Number: 31199011479
Status: Excess
Reason: Floodway.

Tract 3507
Proctor Site
Cordell Hull Lake and Dam Project
Celina Co: Clay TN 38551–
Location: TN Highway 52
Landholding Agency: COE
Property Number: 31199011480
Status: Unutilized
Reason: Floodway.

Tract 3721
Obey
Cordell Hull Lake and Dam Project
Celina Co: Clay TN 38551–
Location: TN Highway 53
Landholding Agency: COE
Property Number: 31199011481
Status: Unutilized
Reason: Floodway.

Tracts 608, 609, 611 and 612
Sullivan Bend Launching Area
Cordell Hull Lake and Dam Project
Carthage Co: Smith TN 37030–
Location: Sullivan Bend Road
Landholding Agency: COE
Property Number: 31199011482
Status: Underutilized
Reason: Floodway.

Tract 920
Indian Creek Camping Area
Cordell Hull Lake and Dam Project
Granville Co: Smith TN 38564–
Location: TN Highway 53
Landholding Agency: COE
Property Number: 31199011483
Status: Underutilized
Reason: Floodway.

Tract 1710, 1716 and 1703
Flynns Lick Launching Ramp
Cordell Hull Lake and Dam Project
Gainesboro Co: Jackson TN 38562–
Location: Whites Bend Road
Landholding Agency: COE
Property Number: 31199011484
Status: Underutilized
Reason: Floodway.

Tract 1810
Wartrace Creek Launching Ramp
Cordell Hull Lake and Damp Project
Gainesboro Co: Jackson TN 38551–
Location: TN Highway 85
Landholding Agency: COE
Property Number: 31199011485
Status: Underutilized
Reason: Floodway.

Tract 2524
Jennings Creek
Cordell Hull Lake and Dam Project
Gainesboror Co: Jackson TN 38562–
Location: TN Highway 85
Landholding Agency: COE
Property Number: 31199011486
Status: Unutilized
Reason: Floodway.

Tracts 2905 and 2907
Webster
Cordell Hull Lake and Dam Project
Gainesboro Co: Jackson TN 38551–
Location: Big Bottom Road
Landholding Agency: COE
Property Number: 31199011487
Status: Unutilized
Reason: Floodway.

Tracts 2200 and 2201
Gainsboro Airport
Cordell Hull Lake and Dam Project
Gainesboro Co: Jackson TN 38562–
Location: Big Bottom Road
Landholding Agency: COE
Property Number: 31199011488
Status: Underutilized
Reasons: Within airport runway clear zone, Floodway.

Tracts 710C and 712C
Sullivan Island
Cordell Hull Lake and Dam Project
Carthage Co: Smith TN 37030–
Location: Sullivan Bend Road
Landholding Agency: COE
Property Number: 31199011489
Status: Unutilized
Reason: Floodway.

Tract 2403, Hensley Creek
Cordell Hull Lake and Dam Project
Gainesboro Co: Jackson TN 38562–
Location: TN Highway 85
Landholding Agency: COE
Property Number: 31199011490
Status: Unutilized
Reason: Floodway.

Tracts 2117C, 2118 and 2120
Cordell Hull Lake and Dam Project
Trace Creek
Gainesboro Co: Jackson TN 38562–
Location: Brooks Ferry Road
Landholding Agency: COE
Property Number: 31199011491
Status: Unutilized
Reason: Floodway.

Tracts 424, 425 and 426
Cordell Hull Lake and Dam Project
Stone Bridge
Carthage Co: Smith TN 37030–
Location: Sullivan Bend Road
Landholding Agency: COE
Property Number: 31199011492
Status: Unutilized
Reason: Floodway.

Tract 517
J. Percy Priest Dam and Reservoir
Snuggs Creek Embayment
Nashville Co: Davidson TN 37214–
Location: Interstate 40 to S. Mount Juliet Road.
Landholding Agency: COE
Property Number: 31199011493
Status: Underutilized
Reason: Floodway.

Tract 1811
West Fork Launching Area
Smyrna Co: Rutherford TN 37167–
Location: Florence road near Enon Springs Road
Landholding Agency: COE
Property Number: 31199011494
Status: Underutilized
Reason: Floodway.

Tract 1504
J. Perry Priest Dam and Reservoir
Lamon Hill Recreation Area
Smyrna Co: Rutherford TN 37167–
Location: Lamon Road

Landholding Agency: COE
Property Number: 31199011495
Status: Underutilized
Reason: Floodway.

Tract 1500
J. Perry Priest Dam and Reservoir
Pools Knob Recreation
Smyrna Co: Rutherford TN 37167–
Location: Jones Mill Road
Landholding Agency: COE
Property Number: 31199011496
Status: Underutilized
Reason: Floodway.

Tracts 245, 257, and 256
J. Perry Priest Dam and Reservoir
Cook Recreation Area
Nashville Co: Davidson TN 37214–
Location: 2.2 miles south of Interstate 40 near Saunders Ferry Pike.
Landholding Agency: COE
Property Number: 31199011497
Status: Underutilized
Reason: Floodway.

Tracts 107, 109 and 110
Cordell Hull Lake and Dam Project
Two Prong
Carthage Co: Smith TN 37030–
Location: US Highway 85
Landholding Agency: COE
Property Number: 31199011498
Status: Unutilized
Reason: Floodway.

Tracts 2919 and 2929
Cordell Hull Lake and Dam Project
Sugar Creek
Gainesboro Co: Jackson TN 38562–
Location: Sugar Creek Road
Landholding Agency: COE
Property Number: 31199011500
Status: Unutilized
Reason: Floodway.

Tracts 1218 and 1204
Cordell Hull Lake and Dam Project
Granville—Alvin Yourk Road
Granville Co: Jackson TN 38564–
Landholding Agency: COE
Property Number: 31199011501
Status: Unutilized
Reason: Floodway.

Tract 2100
Cordell Hull Lake and Dam Project
Galbreaths Branch
Gainesboro Co: Jackson TN 38562–
Location: TN Highway 53
Landholding Agency: COE
Property Number: 31199011502
Status: Unutilized
Reason: Floodway.

Tract 104 et. al.
Cordell Hull Lake and Dam Project
Horseshoe Bend Launching Area
Carthage Co: Smith TN 37030–
Location: Highway 70 N
Landholding Agency: COE
Property Number: 31199011504
Status: Underutilized
Reason: Floodway.

Tracts 510, 511, 513 and 514
J. Percey Priest Dam and Reservoir Project
Lebanon Co: Wilson TN 37087–
Location: Vivrett Creek Launching Area, Alvin Sperry Road
Landholding Agency: COE
Property Number: 31199120007
Status: Underutilized
Reason: Floodway.

Tract A–142, Old Hickory Beach
Old Hickory Blvd.
Olk Hickory Co: Davidson TN 37138–
Landholding Agency: COE
Property Number: 31199130008
Status: Underutilized
Reason: Floodway.

Land/Portion
Volunteer Army Ammunition Plant
Chattanooga Co: Hamilton TN 37422–2607
Landholding Agency: GSA
Property Number: 54199730018
Status : Excess
Reasons: Within 2000 ft. of flammable or explosive material
GSA Number; 4–D–TN–645.

Texas

Tracts 104, 105–1, 105–2 & 118
Joe Pool Lake
Co: Dallas TX
Landholding Agency: COE
Property Number: 31199010397
Status: Underutilized
Reason: Floodway.

Part of Tract 201–3
Joe Pool Lake
Co: Dallas TX
Landholding Agency: COE
Property Number: 31199010398
Status: Underutilized
Reason: Floodway.

Part of Tract 323
Joe Pool Lake
Co: Dallas TX
Landholding Agency: COE
Property Number: 31199010399
Status: Underutilized
Reason: Floodway.

Tract 702–3
Route 1, Box 172
Granger Lake
Landholding Agency: COE
Property Number: 31199010401
Status: Unutilized
Reason: Floodway.

Tract 706
Granger Lake
Route 1, Box 172
Granger Co: Williamson TX 76530–9801
Landholding Agency: COE
Property Number: 31199010402
Status: Unutilized
Reason: Floodway.

Utah

10.24 acres
Southern Utah Communication Site
Salt Lake Ut
Landholding Agency: Air Force
Property Number: 18199810002
Status: Unutilized
Reason: Inaccessible.

Washington

Fairchild AFB
SE corner of base
Fairchild AFB Co: Spokane WA 99011–
Landholding Agency: Air Force
Property Number: 18199010137
Status: Unutilized
Reason: Secured Area.

Fairchild AFB
Fairchild AFB Co: Spokane WA 99011–
Location: NW corner of base–
Landholding Agency: Air Force
Property Number: 18199010138
Status: Unutilized
Reason: Secured Area.

West Virginia

Morgantown Lock and Dam
Box 3 RD #2
Morgantown Co: Monongahelia WV 26505–
Landholding Agency: COE
Property Number: 31199011530
Status: Unutilized
Reason: Floodway.

London Lock and Dam
Route 60 East
Rual Co: Kanawah WV 25126–
Location: 20 miles east of Charleston, W. Virginia
Landholding Agency: COE
Property Number: 31199011690
Status: Unutilized
Reason: .03 acres; very narrow strip of land loc.

Portion of Tract #101
Buckeye Creek
Sutton Co: Braxton WV 26601–
Landholding Agency: COE
Property Number: 31199810006
Status: Excess
Reason: Inaccessible.

Williamson Non-Structural
Segment 6
Williamson Co: Mingo WV 25661–
Landholding Agency: GSA
Property Number: 31199820011
Status: Excess
Reasons: Floodway. GSA Number: 4–D–WV–528A.

Wyoming

Cody Industrial Area
Cody Co: Park WY 82414–
Landholding Agency: GSA
Property Number: 54199740008
Status: Excess
Reasons: Within 2000 ft. of flammable or explosive material. GSA Number: 7–I–WY–0539.

[FR Doc. 99–5139 Filed 3–4–99; 8:45 am]

BILLING CODE 4210–29–M

DEPARTMENT OF THE INTERIOR

Fish and Wildlife Service

Endangered and Threatened Species Permit Applications

ACTION: Notice of receipt of applications.

SUMMARY: The following applicants have applied for a permit to conduct certain activities with endangered species. This notice is provided pursuant to section 10(a) of the Endangered Species Act of 1973, as amended (16 U.S.C. 1531, *et seq.*).

Permit No. TE–006882–0

Applicant: David Evans & Associates, Tucson, Arizona.

Applicant requests authorization for scientific research and recovery purposes to conduct presence/absence surveys for the cactus ferruginous pygmy-owl (*Glaucidium brasilianum cactorum*) within Arizona.

Permit No. PRT–826091

Applicant: Bureau of Land Management (BLM), Phoenix Field Office, Phoenix, Arizona.

Applicant requests authorization for scientific research and recovery purposes to conduct presence/absence surveys for the Gila topminnow (*Poeciliopsis occidentalis*), desert pupfish (*Cyprinodon macularius*), lesser long-nosed bat (*Leptonycteris curasoae yerbabuenae*), and Yuma clapper rail (*Rallus longirostris*) on public lands administered by the BLM, Phoenix Field Office in Arizona.

Permit No. TE–007231–0

Applicant: Lois Balin, Tucson, Arizona.

Applicant requests authorization for scientific research purposes to conduct presence/absence surveys for the cactus ferruginous pygmy-owl (*Glaucidium brasilianum cactorum*), and southwestern willow flycatcher (*Empidonax traillii extimus*) in Pima, Santa Cruz, Cochise, Pinal, and Gila Counties, Arizona.

Permit No. TE–007718–0

Applicant: Henry J. Messing, Phoenix, Arizona.

Applicant requests authorization for scientific research and recovery purposes to conduct presence/absence surveys for the cactus ferruginous pygmy-owl (*Glaucidium brasilianum cactorum*), and southwestern willow flycatcher (*Empidonax traillii extimus*) in Graham, Pima, Santa Cruz, Cochise, Pinal, Maricopa, and Gila Counties, Arizona.

Permit No. TE–007874–0

Applicant: Sverdrup Civil, Inc., Tempe, Arizona.

Applicant requests authorization for scientific research and recovery purposes to conduct presence/absence surveys for the southwestern willow flycatcher (*Empidonax traillii extimus*), Mexican spotted owl (*Strix occidentalis lucida*), and cactus ferruginous pygmy-owl (*Glaucidium brasilianum cactorum*) within Arizona and New Mexico.

Permit No. TE–008187–0

Applicant: Stephanie R. Fudge, Huntington, Arkansas.

Applicant requests authorization for scientific research and recovery purposes to conduct presence/absence surveys for the American burying beetle (*Nicrophorous americanus*) in Oklahoma counties where construction activities threaten the species.

Permit No. TE–819458–0

Applicant: Organ Pipe Cactus National Monument, Ajo, Arizona.

Applicant requests authorization for scientific research and recovery purposes to conduct presence/absence surveys for the southwestern willow flycatcher (*Empidonax traillii extimus*) in Grand Canyon National Park, and Sonoran pronghorn (*Antilocapra sonoriensis*) on Organ Pipe Cactus National Monument.

Permit No. TE–008209–0

Applicant: Arizona Army National Guard, Phoenix, Arizona.

Applicant requests authorization for scientific research and recovery purposes to conduct presence/absence surveys for the cactus ferruginous pygmy-owl (*Glaucidium brasilianum cactorum*) on military training lands within Arizona.

Permit No. TE–008218–0

Applicant: Glenn Arther Proudfoot, Armstrong, Texas.

Applicant requests authorization for scientific research and recovery purposes to conduct presence/absence surveys for the cactus ferruginous pygmy-owl (*Glaucidium brasilianum cactorum*) within the species historic range in Arizona.

Permit No. TE–008233–0

Applicant: U.S.G.S., Biological Resources Division, Museum of Southwestern Biology, Albuquerque, New Mexico.

Applicant requests authorization to incidentally capture the lesser long-nosed bat (*Leptonycteris curasoae yerbabuenae*) and the Mexican long-nosed bat (*Leptonycteris nivalis*) incidental to conducting a study of the Mexican long-tongued bat (*Choeronycteris mexicana*) in Arizona, New Mexico, and Texas.

Permit No. PRT–797129

Applicant: Arizona State University, Department of Biology, Tempe, Arizona.

Applicant requests authorization for scientific research and recovery purposes to conduct activities for the following endangered and threatened species:

humpback chub (*Gila cypha*)
Yaqui chub (*Gila purpurea*)
woundfin (*Plagopterus argentissimus*)
razorback sucker (*Xyrauchen texanus*)
Gila topminnow (*Poeciliopsis o. occidentalis*)
Sonora tiger salamander (*Ambystoma tigrinum stebbens*)
bonytail chub (*Gila elegans*)
Virgin River chub (*Gila robusta seminuda*)
Colorado squawfish (*Ptycholcheilus lucius*)
desert pupfish (*Cyprinodon m. macularis*)
Yaqui topminnow (*Poeciliopsis occidentalis sonoriensis*)
Quitobaquito pupfish (*C. macularis eremus*)

Permit No. PRT–826124

Applicant: USGS, Biological Resources Division, Denver, Colorado.

Applicant requests authorization for scientific research and recovery purposes to conduct endangered and threatened species activities for razorback sucker (*Xyrauchen texanus*), and bonytail chub (*Gila elegans*) in the Colorado mainstem and reservoirs bordered by Nevada, Arizona, and California from Hoover Dam to the Mexican border.

Permit No. PRT–829114

Applicant: The Arboretum at Flagstaff, Flagstaff, Arizona.

Applicant requests authorization for scientific research and recovery purposes to collect cuttings, seeds, and fruits from the sentry milk-vetch (*Astragalus cremnophylax var. cremnophylax*) from various locations in Arizona.

Permit No. PRT–798958

Applicant: New Mexico State University, Department of Biology, Las Cruces, New Mexico.

Applicant requests authorization to salvage the following endangered and threatened species in Arizona, New Mexico, Texas, and Oklahoma for scientific research and educational display purposes.

lesser long-nosed bat (*Leptonycteris curasoae yerbabuenae*)
Mexican long-nosed bat (*Leptonycteris nivalis*)
black-footed ferret (*Mustela nigripes*)
jaguar (*Panthera onca*)
jaguarundi (*Felis yagouaroundi*)
ocelot (*Felis pardalis*)
Sonoran pronghorn (*Antilocapra americana sonoriensis*)
Yuma clapper rail (*Rallus longirostris yumanensis*)
New Mexico ridge-nosed rattlesnake (*Crotalis willardi obscurus*)

Permit No. PRT–825591

Applicant: Celia A. Cook, Santa Fe, New Mexico.

Applicant requests authorization for scientific research and recovery purposes to conduct presence/absence surveys for the bald eagle (*Haliaeetus leucocephalus*) and black-footed ferret (*Mustela nigripes*) in New Mexico and Arizona.

Permit No. TE–008380–0

Applicant: Alfred M. Boyajian, Atlanta, Georgia.

Applicant requests authorization to purchase in interstate commerce one captive-bred ocelot (*Felis pardalis*) for recovery and educational display purposes.

Permit No. TE–008513–0

Applicant: Arizona Game & Fish Department, Flagstaff, Arizona.

Applicant requests authorization for scientific research and recovery purposes to collect humpback chub (*Gila cypha*) in the Lower Little Colorado River on the Navajo Nation and Grand Canyon National Park, Arizona and conduct activities with bonytail chub (*Gila elegans*) obtained from the Dexter National Fish Hatchery.

Permit No. TE–008365–0

Applicant: Bureau of Indian Affairs/Navajo Indian Irrigation Project, Farmington, New Mexico.

Applicant requests authorization for scientific research and recovery purposes to conduct presence/absence surveys for the southwestern willow flycatcher (*Empidonax traillii extimus*) on the Navajo Agriculture Products Industry Land in northwest New Mexico.

DATES: Written comments on these permit applications must be received on or before April 5, 1999.

ADDRESSES: Written data or comments should be submitted to the Legal Instruments Examiner, Division of Endangered Species/Permits, Ecological Services, P.O. Box 1306, Albuquerque, New Mexico 87103. Please refer to the respective permit number for each application when submitting comments. All comments received, including names and addresses, will become part of the official administrative record and may be made available to the public.

FOR FURTHER INFORMATION CONTACT: U.S. Fish and Wildlife Service, Ecological Services, Division of Endangered Species/Permits, P.O. Box 1306, Albuquerque, New Mexico 87103. Please refer to the respective permit number for each application when requesting copies of documents. Documents and other information submitted with these applications are available for review, subject to the requirements of the Privacy Act and Freedom of Information Act, by any party who submits a written request for a copy of such documents within 30 days of the date of publication of this notice, to the address above.

Bryan Arroyo,

ARD-Ecological Services, Region 2, Albuquerque, New Mexico.

[FR Doc. 99–5460 Filed 3–4–99; 8:45 am]

BILLING CODE 4510–55–M

DEPARTMENT OF THE INTERIOR

Fish and Wildlife Service

Availability of Draft Revised Recovery Plan for Gila topminnow for Review and Comment

AGENCY: Fish and Wildlife Service, Interior.

ACTION: Notice of document availability and public comment period.

SUMMARY: The U.S. Fish and Wildlife Service (Service) announces the availability for public review of a draft revised recovery plan for the Gila topminnow (*Poeciliopsis occidentalis occidentalis*). This endangered species now occurs in the Gila River basin of Arizona and Mexico. Only the U.S. portion of the range is protected under the Endangered Species Act. Historical records exist for the Gila River basin in New Mexico. The Service solicits comments from the public on the draft revised recovery plan.

In 1967 the Gila (Sonoran) topminnow was listed as endangered within the United States, under the Endangered Species Protection Act of 1966 (USDI 1967). Following passage of the Endangered Species Act of 1969, the Gila (Sonoran) topminnow was included on Appendix D, the list of species endangered within the United States (USDI 1970).

DATES: Written comments on the recovery plan should be received on or before April 19, 1999.

ADDRESSES: Persons wishing to review recovery plan may obtain a copy by contacting the U.S. Fish and Wildlife Service, Arizona Ecological Services Field Office, 2321 West Royal Palm Road, Suite 103, Phoenix, Arizona 85021, (602–640–2720; Fax 602–640–2730), or the person named below. Written data or comments concerning the recovery plan should be submitted to the Field Supervisor, Ecological Services Field Office, Phoenix, Arizona (see address above). Comments and materials are available on request for public inspection, by appointment, during normal business hours at the above address.

FOR FURTHER INFORMATION CONTACT: Doug Duncan, U.S. Fish and Wildlife Service, Tucson Sub-office, 300 West Congress, Room 4D, Tucson, AZ 85701 (520–670–4860; Fax 520–670–4567).

SUPPLEMENTARY INFORMATION: Restoring threatened and endangered animals or plants where they are again secure, self-sustaining members of their ecosystem is a primary goal of the Service's endangered species program. The purpose of a recovery plan is to guide the recovery of a listed species. The Plans describe actions considered necessary for conservation of the species, establish criteria for the recovery levels for downlisting or delisting them, and estimate the time and cost for implementing the recovery actions needed.

The Endangered Species Act (Act) requires development of recovery plans for listed species unless such a plan would not promote the conservation of that species. The Act also requires that public notice and an opportunity for public review be provided during recovery plan development. The Service will consider all information presented during a public comment period prior to approval of each new or revised recovery plan. The Service and other Federal agencies will also take these comments into account in the course of implementing approved recovery plans.

The Sonoran topminnow (*Poeciliopsis occidentalis*), includes two subspecies, the Gila topminnow (*P. o. occidentalis*) and the Yaqui topminnow (*P. o. occidentalis*). Recovery of the Yaqui topminnow is covered by the Yaqui Fishes Recovery Plan. The Gila topminnow is native to the Gila River Basin of the United States and Mexico, and the Ríos de la Concepción and Sonora of northern Mexico. It was considered one of the most common fishes in the southern part of the Colorado River basin prior to 1940. However, habitat loss and interaction with nonnative fishes, particularly western mosquitofish (*Gambusia affinis*) caused range-wide disappearances and decreases in abundance within the United States.

Gila topminnows were historically widespread in the Gila River drainage below about 4,000 feet elevation. The subspecies was found in the San Francisco River at Frisco Hot Springs, New Mexico, west to the mainstem Gila River near Yuma, Arizona, and possibly even into the lower Colorado River. The fish thrived in the Salt River as far upstream as the present site of Roosevelt Lake and was also common in Tonto Creek. Although there are no museum specimens from the Verde or San Simon rivers, Gila topminnows likely occurred there. Two collections are known from the San Pedro River. Records of Gila

topminnow are also known from the Santa Cruz River. Various tributary streams and springs, most notably Sonoita Creek, Cienega Creek, and Sabino Canyon, also historically supported Gila topminnows.

Habitat destruction and introduction of nonnative species have caused severe reductions of Gila topminnow populations, and are the main causes for its listing as an endangered species. Past and current threats to the Gila topminnow and its habitat include dams, water diversion, watershed deterioration, channelization, livestock overgrazing, and introduction of nonnative competitive and predatory aquatic species. The western mosquitofish has proved to be especially detrimental to Gila topminnow populations.

Since being federally listed in 1967, the Gila topminnow has been reestablished into more locations than any native fish in the Southwest. However, both naturally occurring and reestablished populations continue to decline. The recovery plan details the Gila topminnow recovery effort, acquaints the reader with the subspecies and its status, the threats it faces, and provides a revised plan for its survival and recovery in the United States.

The draft revised recovery plan has been extensively reviewed the last five years by agencies, species experts, and the Desert Fishes Recovery Team. The plan will be published as final following incorporation of comments and material received during this comment period.

Public Comments Solicited: The Service solicits comments on the draft revised recovery plan described. All comments received by the date specified above will be considered prior to approval of the plans.

Authority: The Authority for this action is Section 4(f) of the Endangered Species Act, 16 U. S. C. 1533 (f).

Dated: February 26, 1999.

Thomas Bauer,

Regional Director, Fish and Wildlife Service.

[FR Doc. 99–5427 Filed 3–4–99; 8:45 am]

BILLING CODE 4310–55–P

DEPARTMENT OF THE INTERIOR

Fish and Wildlife Service

Availability of an Environmental Assessment on the Proposed Issuance of an Incidental Take Permit for Boise Cascade Timber Company, Clatsop County, Oregon

AGENCY: Fish and Wildlife Service, DOI.

ACTION: Notice of availability, Request for comments, and reopening of comment period.

SUMMARY: This notice advises the public that the Fish and Wildlife Service (Service) has prepared a draft Environmental Assessment on the proposed issuance of an incidental take permit to the Boise Cascade Corporation (Boise Cascade) pursuant to section 10(a)(1)(B) of the Endangered Species Act of 1973, as amended (Act). The proposed permit would authorize the incidental take, resulting from habitat modification, of the northern spotted owl (Strix occidentalis caurina), which is listed under the Act as a threatened species. The Service announced the receipt of Boise Cascade's incidental take permit application and the availability of the Boise Cascade Walker Creek Unit Habitat Conservation Plan (Plan) and draft Implementation Agreement, which accompany the incidental take permit application, for public comment on December 23, 1998 (63 FR 71148). Because the draft Environmental Assessment provides additional information on the effects of the proposed permit issuance, the Service will accept additional comments on the permit application, Plan, and draft Implementation Agreement during the comment period for the draft Environmental Assessment.

DATES: Written comments on the draft Environmental Assessment, permit application, Plan, and draft Implementation Agreement should be received on or before April 5, 1999.

ADDRESSES: Individuals wishing copies of the draft Environmental Assessment, permit application, full text of the Plan, or the draft Implementation Agreement should immediately contact the office and personnel listed below. These documents also will be available for public inspection, by appointment, during normal business hours at the address below. Comments regarding the draft Environmental Assessment, permit application, draft Implementation Agreement or the Plan should be addressed to State Supervisor, Fish and Wildlife Service, Oregon State Office, 2600 S.E. 98th Avenue, Suite 100, Portland, Oregon 97266. Please refer to permit number TE005227–0 when submitting comments.

FOR FURTHER INFORMATION CONTACT: Mr. Rich Szlemp, Fish and Wildlife Service, Oregon State Office, telephone (503) 231–6179.

SUPPLEMENTARY INFORMATION: Boise Cascade is proposing to harvest approximately 50 acres of mature and old growth forest from a 65-acre parcel of land. The surrounding ownership consists of Oregon Department of Forestry land and lands owned by the Agency Creek Management Company. The Boise Cascade property contains two nest trees that were occupied by a pair of northern spotted owls between 1990 and 1996. Other listed species may also be affected by the proposed Plan. Coho salmon (*Oncorhynchus kisutch*) are found in Walker Creek in the Plan area. No surveys have been conducted for marbled murrelets (*Brachyramphus marmoratus*) or bald eagles (*Haliaeeus leucocephalus*), but the Plan area does contain potentially suitable nesting platforms for marbled murrelets and contains suitable bald eagle habitat. The Plan area contains some of the best northern spotted owl nesting habitat in the northern portion of the Oregon Coast Range. Most of the surrounding land has been logged or contains younger stands of timber that do not provide as high quality of owl nesting habitat as the Plan area.

Alternatives Analyzed in the Draft Environmental Assessment

Alternative 1. No Action

Under this alternative the Service would not issue a permit or the applicant would decide to not harvest the unit. For this analysis, it is assumed that this alternative would maintain the existing old growth forest within the unit.

Alternative 2. The Incidental Take Permit Application and Plan Submitted by Boise Cascade

This alternative would provide for the maximum timber harvest allowable under the Oregon Forest Practices Act. Boise Cascade would harvest about 50 acres of a 70-acre spotted owl core area originally designated by the Oregon Department of Forestry. Boise Cascade removed 6 acres of forest associated with the construction of a logging road in 1989. The remaining 14 acres of the core is on adjacent state forest lands or private lands. Logging of the unit was prohibited by the State of Oregon until 1997 because the unit was within the core area of an active spotted owl site. Due to the lack of use of this site as an activity center for spotted owls in 1997, the Oregon Department of Forestry formally considered this site abandoned. However, the 50 acres are all considered suitable spotted owl habitat and include two trees that were known to be used by spotted owls as nest trees. A pair of spotted owls were active in the vicinity of this core area between 1990 and 1996, and were known to have nested in 1990, 1992 and

1994. A juvenile spotted owl has been detected in various locations in the general vicinity of the unit over the past year.

Boise Cascade proposes to: conduct harvest activities outside of the spotted owl nesting season (March 1–September 15); use existing roads that may need to be graded or otherwise refurbished for hauling use; use a tractor to remove logs in areas of flat terrain; use a cable/skyline to yard trees on the majority of the area which contains slopes of greater than 30 percent; and, replant harvested areas with Douglas-fir, sitka spruce, western red cedar, and/or western hemlock within 12 months of harvest. As required by the Oregon Forest Practices Act, Boise Cascade would leave, on average per acre harvested, at least:

- Two snags or two green trees at least 30 feet in height and 11 inches diameter at breast height (dbh) or larger, at least 50 percent of which are conifers; and
- Two downed logs or downed trees, at least 50 percent of which are conifers, that each comprise at least 10 cubic-feet gross volume and are no less than 6 feet long. One downed conifer or suitable hardwood log of at least 20 cubic feet gross volume and no less than 6 feet long may count as 2 logs.

In addition, Boise Cascade has stated in its written operations harvesting plan (97–11514) dated October 22, 1997, and submitted to the Oregon Department of Forestry that it would log the unit in accordance with the following conditions:

- No conifer would be harvested within 100 feet of Walker Creek (using the high water mark as a boundary). No hardwood would be harvested within 50 feet of Walker Creek. All ''in-unit'' leave trees would be placed in, or adjacent to, the riparian management area. Conifer leave trees would be placed further than 100-feet from Walker Creek and hardwood leave trees would be placed further than 50-feet from Walker Creek. The ''in-unit'' leave trees would be a minimum of 75 percent conifer. All other trees would be harvested;
- Any tree that cannot be felled and kept further than 50 feet from Walker Creek would be left standing. Any portion of a felled tree inadvertently falling within 50 feet of Walker Creek would be left;
- No downed wood or snags (except those required to be cut for safety) would be cut within the Walker Creek riparian management area. No downed wood or snags would be cut within 20 feet of a small tributary that enters Walker Creek in the northeast corner of the unit; and
- The unit would be cable/cat yarded. Logging skylines may hang across the riparian management area. All yarding road changes would be made either by clearing above the riparian management area or by pulling back and restringing each road. Only safety trees would be cut in this process.

This alternative would eliminate spotted owl habitat for an unknown and indefinite period of time. This alternative would likely result in incidental take in the form of harm by impairing essential breeding, feeding, and sheltering behaviors of spotted owls.

Alternative 3. Large Tree, Snag, and Downed Wood Retention Alternative

This alternative is similar to the Boise Cascade Plan, but would include the following prescriptions:

- Two of the largest diameter green trees per acre harvested would be retained, including the two known spotted owl nest trees. Half of these trees would be a minimum of 26 inches dbh, and the remaining half would be a minimum of 34 inches dbh. Snags could be substituted for green trees, so long as the total number would not exceed more than 20 percent of the leave trees, and the snags have a trunk at least 30 feet tall. Trees retained within the designated 100-foot riparian management area under the Oregon Forest Practices Act could not be double-counted for the leave trees;
- The retained trees would be clumped and randomly distributed throughout the harvested acreage, and not all clumped within or immediately adjacent to the riparian management area. The clumps would be positioned and composed of enough trees, including sub-dominant trees if necessary, to withstand windthrow in such a manner that the target of 100 leave trees would be maintained outside of the riparian management area;
- All existing downed logs would be retained; and
- The retained trees would not be harvested for a period of 80 years.

This alternative would result in a likelihood of incidental take of spotted owls associated with harm through habitat loss, but would provide dispersal quality habitat in about 40 years.

Alternative 4. Dispersal Habitat Alternative

This alternative would allow for timber harvest in accordance with the following prescriptions:

- No more than 40 percent of the standing tree basal area would be removed, and trees that would be at least 11 inches dbh and have an average 40 percent canopy closure immediately after harvest would be retained;
- At least one of the two known spotted owl nest trees would be retained;
- No downed logs would be removed; and
- Further logging on the unit would be deferred for 40 years.

This alternative would result in a likelihood of incidental take of spotted owls by harm through habitat loss within the area harvested, but would maintain dispersal quality habitat and provide spotted owl foraging opportunities.

Alternative 5. Dispersal and Remnant Nesting Habitat Alternative

In addition to the prescriptions identified in alternative 4, this alternative would add a 500-foot, no-cut protection zone, within the bounds of the property, centered around one of the two known owl nest trees.

This alternative would result in a likelihood of incidental take of spotted owls by harm through habitat loss within the area harvested, but would maintain dispersal and foraging quality habitat, and provide a remnant piece of nesting quality habitat.

All interested agencies, organizations, and individuals are urged to provide comments on the draft Environmental Assessment, permit application, Plan, and draft Implementation Agreement. All comments received by the closing date will be considered by the Service as it completes its National Environmental Policy Act compliance and makes its decision regarding permit issuance or denial.

Dated: February 26, 1999.

Cynthia U. Barry,

Acting Regional Director, Region 1, Portland, Oregon.

[FR Doc. 99–5456 Filed 3–4–99; 8:45 am]

BILLING CODE 4310–55–P

DEPARTMENT OF THE INTERIOR

Bureau of Land Management

[OR–095–09–6332–00: GP9–0095]

Temporary Closure of Public Lands; Lane County, Oregon

AGENCY: Bureau of Land Management, Interior.

ACTION: Temporary closure of public lands in Lane County, Oregon.

SUMMARY: Notice is hereby given that certain public lands in Lane County, Oregon are temporarily closed to all public use, including recreation,

parking, camping, shooting, hiking and sightseeing, from February 24, 1999 through May 31, 1999. The closure is made under the authority of 43 CFR 8364.1.

The public lands affected by this temporary closure are specifically identified as follows:

Willamette Meridian, Oregon

T. 21 S., R. 3 W.

Sec. 1: Beginning at a point on the line between Sections 1 and 2, Township 21 South, Range 3 West, Willamette Meridian, in Lane County, Oregon, 250.8 feet South of the Northwest corner of said Section 1; thence South along said section line 670 feet to a point; thence South 40° 30′ East a distance of 230 feet to a point; thence East 700 feet to a point; thence North 600 feet to the Southwest corner of the David Mosby Donation Land Claim No. 60; thence North 67° 45′ West a distance of 672 feet, more or less, to the point of beginning, in Lane County, Oregon;

EXCEPT that portion lying Southeasterly of the Northwesterly line of Layng Road (County Road No. 373), in Lane County, Oregon. Containing approximately 5 acres.

The following persons, operating within the scope of their official duties, are exempt from the provisions of this closure order: Bureau employees; state, local and federal law enforcement and fire protection personnel; adjoining landowners; the contractor authorized to construct the Mosby Creek Trailhead facilities for the Row River Trail and its subcontractors. Access by additional parties may be allowed, but must be approved in advance in writing by the Authorized Officer.

Any person who fails to comply with the provisions of this closure order may be subject to the penalties provided in 43 CFR 8360.0–7, which include a fine not to exceed $1,000 and/or imprisonment not to exceed 12 months.

The public lands temporarily closed to public use under this order will be posted with signs at points of public access.

The purpose of this temporary closure is to provide for public safety, facilitate construction of the Mosby Creek Trailhead facilities, and protection of property and equipment during the mobilization, construction and de-mobilization phases of the Mosby Creek Trailhead construction project.

DATES: This closure is effective from February 24, 1999 through May 31, 1999.

ADDRESSES: Copies of the closure order and maps showing the location of the closed lands are available from the Eugene District Office, P. O. Box 10226 (2890 Chad Drive), Eugene, Oregon 97440.

FOR FURTHER INFORMATION CONTACT: Steven Calish, South Valley Area Manager, Eugene District Office, at (541) 683–6600.

Dated: February 23, 1999.

Steven Calish,

South Valley Area Manager.

[FR Doc. 99–5428 Filed 3–4–99; 8:45 am]

BILLING CODE 4310–33–P

DEPARTMENT OF THE INTERIOR

Bureau of Land Management

[NM–930–1310–01; NMNM 89783]

New Mexico: Proposed Reinstatement of Terminated Oil and Gas Lease

Under the provision of Public Law 97–451; a petition for reinstatement of Oil and Gas Lease NMNM 89783, Rio Arriba County, New Mexico, was timely filed and was accompanied by all required rentals and royalties accruing from November 1, 1998, the date of termination.

No valid lease has been issued affecting the lands. The lessee has agreed to new lease terms for rentals and royalties at rates of $10.00 per acre, or fraction thereof, and 16 ⅔ percent, respectively. The lessee has paid the required $500 administrative fee and has reimbursed the Bureau of Land Management for the cost of this **Federal Register** notice.

The lessee has met all the requirements for reinstatement of the lease as set in Section 31(d) and (e) of the Mineral Leasing Act of 1920, as amended (30 U.S.C. 188(d) and (e))., and the Bureau of Land Management is proposing to reinstate the lease effective November 1, 1998, subject to the original terms and conditions of the lease and the increased rental and royalty rates cited above.

For Further Information Contact: Becky C. Olivas, BLM, New Mexico State Office, (505) 438–7609.

Dated: February 25, 1999.

Becky C. Olivas,

Land Law Examiner, Fluids Adjudication Team.

[FR Doc. 99–5471 Filed 3–4–99; 8:45 am]

BILLING CODE 4310–FB–M

DEPARTMENT OF THE INTERIOR

Bureau of Land Management

[(CA–350–1220–00)(CACA 38217 01)]

Realty Action, CA

AGENCY: Bureau of Land Management, Interior.

ACTION: Notice of Intent to Amend the Honey Lake Land Use Plan; California.

SUMMARY: Plan Amendment: The proposed amendment will make lands available that are not of national significance and will serve important public objectives. i.e., expansion of the community and economic development, which cannot be achieved prudently or feasibly on land other than public land.

The following public lands in Lassen County, California are being examined for suitability for sale under section 203 of the Federal Land Policy and Management Act (FLPMA) of 1976, as amended (43 USC 1733), for exchange under section 206 of FLPMA (43 USC 1716) or section 216, the Recreation and Public Purposes Act of 1926, as amended, for lease/conveyance:

Mount Diablo Meridian, Lassen County, California

T.30 N., R.12 E.,

Section 21, E½SE; Section 22, NE, NW, SW, W½SE; Section 27, NW; and Section 28, E½NE.

Containing 880 acres more or less.

For a period of 30 days from the date of publication of this notice in the **Federal Register** interested parties may submit comments involving suitability of the land for public purposes, i.e., schools, hospital, etc. Comments on the Recreation and Public Purposes Act classification are restricted to whether the land is physically suited for the proposal, whether the use will maximize the future use or uses of the land, whether the use is consistent with local planning and zoning, or if the use is consistent with State and Federal programs. Comments regarding the proposed amendment to the Honey Lake Land Use Plan should be sent to the Field Manager, Eagle Lake Field Office, 2950 Riverside Drive, Susanville, California 96130.

Classification/Plan Amendment Comments

The environmental analysis will determine whether these lands are not essential to any Bureau of Land Management program and no resource needed by the public will be lost through transfer to private ownership, and disposal will not be adverse to any known public or private interest.

Linda D. Hansen,

Field Manager.

[FR Doc. 99–5429 Filed 3–4–99; 8:45 am]

BILLING CODE 4310–40–M

DEPARTMENT OF THE INTERIOR

Bureau of Land Management

[CO–034–99–1230–00]

Designation Order; Lifting of the Moratorium on Commercial Outfitting Permits and the Establishment of Special Stipulations, Conditions, and an Environmental Analysis Process for New and Existing Commercial Outfitting Permits for the San Miguel River Special Recreation Management Area and Area of Critical Environmental Concern

AGENCY: Bureau of Land Management, Uncompahgre Field Office, Montrose, Colorado.

ACTION: Lifting of the 1995 moratorium on commercial outfitting permits, establishment of special stipulations and conditions, and initiating an environmental analysis process to evaluate new and existing commercial upland and river permits within 32,641 acres of public lands administered by the Bureau of Land Management as the San Miguel River Special Recreation Management Area (SRMA) and Area of Critical Environmental Concern (ACEC) in San Miguel and Montrose Counties, Colorado.

SUMMARY: In June, 1995, the BLM issued a Federal Register Notice establishing a moratorium on commercial outfitting permits within the SRMA and ACEC to hold commercial use at 1994 levels while a multi-objective watershed plan was being prepared. The Notice of the moratorium (Vol. 60. No. 125, Thursday, June 29, 1995) stated that when the watershed plan was completed, the moratorium would be lifted and constraints on the number of outfitting permits and/or the total number of user days associated with those permits, if any, would be implemented.

The San Miguel Watershed Plan was completed in June, 1998 and actions in the Plan pertaining to Public Lands will be implemented by the BLM where determined feasible and in compliance with existing BLM management objectives or approved plan amendments. Additional environmental analyses will be completed, where determined necessary, to evaluate the impacts of implementation of general and/or site specific management actions and projects.

As part of the Watershed Plan implementation process, the BLM is lifting the commercial permit moratorium until April 15, 1999 and entering into a two-year analysis period during which time it will: (1) Issue new annual probationary permits to both river and upland outfitters that meet Special Recreation Permit application requirements and BLM management objectives for the SRMA/ACEC; (2) Allow existing permitted outfitters within the SRMA/ACEC area to propose modifications to their operating plans and proposed use figures; (3) Conduct on-the ground monitoring of all uses within the SRMA/ACEC to provide environmental and social data for analyzing the impacts of those uses; (4) Establish interim Special Stipulations and Conditions for commercial permits and site-specific management regulations for all uses within the management area where needed to protect resources and reduce user conflicts; and, (5) Work with the public and the San Miguel Coordinating Council and a San Miguel Watershed Task Force to prioritize and implement additional resource management actions and develop resource protection standards, Limits of Acceptable change, and other similar protection guidelines for recreation uses within the SRMA and ACEC.

At the end of the two-year period, the BLM will determine, through an environmental analysis process, how commercial permits will be issued and managed in the future to ensure maximum protection of the area's sensitive riparian resources, reduce user conflicts, and provide the highest quality recreational opportunities for the outfitted public. The process will include, but not be limited to, analyzing the impacts of reissuing permits to existing outfitters, the impacts of the new probationary permits on the existing uses, and the potential impacts of restricting commercial use in the future under a closure or allocation system.

EFFECTIVE DATES: The moratorium is lifted as of March 10, 1999 and will be reinstated on April 16, 1999. All new river permit applications for the San Miguel River must be postmarked by April 15, 1999 and received no later than five days afterward by the Uncompahgre Field Office. The environmental analysis period will begin April 15, 1999 and extend through December 31, 2001.

FOR FURTHER INFORMATION CONTACT: Karen Tucker, Recreation Planner, Uncompahgre Field Office, 2505 South Townsend Ave., Montrose, Colorado 80401, (970) 240–5309.

Dated: March 2, 1999.

Allan J. Belt,

Uncompahgre Field Office Manager.

[FR Doc 99–5458 Filed 3–4–99; 8:45 am]

BILLING CODE 4310–JB–M

DEPARTMENT OF THE INTERIOR

Bureau of Land Management

[WY–930–4210–06; WYW 147234, WYW 142433]

Notice of Proposed Withdrawal and Opportunity for Public Meeting; Cancellation of Proposed Withdrawal; Wyoming

AGENCY: Bureau of Land Management, Interior.

ACTION: Notice.

SUMMARY: The Bureau of Land Management (BLM) proposes to withdraw 3951.36 acres of public land in Big Horn County, to protect important paleontological resources within the Red Gulch dinosaur track site pending completion of land use planning. This notice closes the land for up to two years from surface entry and mining. The land will remain open to mineral leasing.

EFFECTIVE DATE: March 5, 1999. Comments and requests for a public meeting must be received by June 3, 1999.

ADDRESSES: Comments and requests should be sent to the BLM Wyoming State Director, P.O. Box 1828, Cheyenne, Wyoming 82003–1828.

FOR FURTHER INFORMATION CONTACT: Janet Booth, BLM Wyoming State Office, 307–775–6124, or Chuck Wilkie, BLM Worland Field Office Manager, P.O. Box 119, 101 South 23rd Street, Worland, Wyoming 82401–0119, 307–347–5100.

SUPPLEMENTARY INFORMATION: 1. On January 29, 1999, a petition was approved allowing the BLM to file an application to withdraw the following described public land in aid of planning from settlement, sale, location, or entry under the general land laws, including the mining laws, subject to valid existing rights:

Sixth Principal Meridian, Wyoming

T. 52 N., R. 91W.,
Sec. 17, all;
Sec. 18, lots 5–8, E½W½, E½;
Sec. 19, lots 5–7, NE¼, SE¼SE¼, NW¼SE¼, N½SW¼SE¼, NE¼SW¼, N½SE¼SW¼, E½NW¼, SE¼SW¼SE¼;
Sec. 20, N½, SE¼, NE¼SW¼;
Sec. 21, all;
Sec. 28, all;
Sec. 29, N½M½, S½NE¼, NE¼SE¼, N½SE¼SE¼, N½NW¼SE¼, N½SE¼NW¼;
Sec. 30, N½NE¼NE¼.

The area described contains approximately 3951.36 acres in Big Horn County, Wyoming.

2. This notice also cancels a withdrawal application approved May

14, 1998, for the BLM to protect paleontological resources in an initial 40-acre tract within this same Red Gulch Dinosaur Tracksite (published May 29, 1998, in the **Federal Register** as FR Doc. 98–148083, 63 FR 29428). The segregative effect associated with that application is hereby terminated; however, the land described below is not open to surface entry and mining as it is within the proposed withdrawal described herein. The land is described as follows:

Sixth Principal Meridian, Wyoming

T. 52 N., R. 91 W.,
Sec. 20, NE¼SW¼.

The area described contains 40.00 acres in Big Horn County.

The purpose of the proposed withdrawal is to protect important paleontological resources pending completion of land use planning, further study and development of appropriate, and possibly longer-term, actions to protect and manage the resources.

For a period of 90 days from the date of publication of this notice, all persons who wish to submit comments, suggestions, or objections in connection with the proposed withdrawal may present their views in writing to the undersigned officer of the BLM.

Notice is hereby given that an opportunity for a public meeting is afforded in connection with the proposed withdrawal. All interested persons who desire a public meeting for the purpose of being heard on the proposed withdrawal must submit a written request to the BLM Wyoming State Director within 90 days from the date of publication of this notice. Upon determination by the authorized officer that public meeting will be held, a notice of the time and place will be published in the **Federal Register** at least 30 days before the scheduled date of the meeting.

The application will be processed in accordance with the regulations set forth in 43 CFR 2300.

For a period of two years from the date of publication of this notice in the **Federal Register**, the land will be segregated as specified above unless the application is denied or canceled or the withdrawal is approved prior to that date. Licenses, permits, cooperative agreements, or discretionary land use authorizations of a temporary nature which would not impact or impair the existing values of the area may be allowed with the approval of an authorized officer of the BLM during the segregative period.

Dated: February 23, 1999.

Alan L. Kesterke,

Associate State Director.

[FR Doc. 99–5085 Filed 3–4–99; 8:45 am]

BILLING CODE 4310–22–M

DEPARTMENT OF THE INTERIOR

Trinity River Basin Fish and Wildlife Task Force

AGENCY: Bureau of Reclamation (Reclamation), Department of the Interior.

ACTION: Notice of public meeting.

SUMMARY: In accordance with Section 10(a)(2) of the Federal Advisory Committee Act (Pub. L. 92–463), announcement is made of a meeting of the Trinity River Basin Fish and Wildlife Task Force.

DATES: The meeting will be held on Friday, March 19, 1999, 9:00 a.m. to 2:00 p.m.

ADDRESSES: The meeting will be at Best Western's Victoria Inn, 1709 Main Street, Weaverville, California 96093. Telephone: 530/623–4432.

FOR FURTHER INFORMATION CONTACT: Mr. Russell P. Smith, Chief, Environmental and Natural Resource Division, Northern California Area Office, 1639 Shasta Dam Boulevard, Shasta Lake, California 96019. Telephone: 530/275–1554 (TDD 530/450–6000).

SUPPLEMENTARY INFORMATION: Task Force members will approve minutes of the June 30, 1998, meeting and a priority list of additional projects for Fiscal Year 1999. The members will be briefed on the Solicitor's review of the Three-Year Action Plan, the U.S. Fish and Wildlife Service Trinity River Flow Evaluation, and the Trinity River Mainstem Fishery Restoration Environmental Impact Statement.

Dated: February 26, 1999.

Kirk C. Rodgers,

Acting Regional Director.

[FR Doc. 99–5457 Filed 3–4–99; 8:45 am]

BILLING CODE 4310–94–P

INTERNATIONAL DEVELOPMENT COOPERATION AGENCY

Overseas Private Investment Corporation

Submission for OMB Review; Comment Request

AGENCY: Overseas Private Investment Corporation, IDCA.

ACTION: Request for comments.

SUMMARY: Under the provisions of the Paperwork Reduction Act (44 U.S.C. Chapter 35), agencies are required to publish a Notice in the **Federal Register** notifying the public that the Agency is preparing an information collection request for OMB review and approval and to request public review and comment on the submission. At OPIC's request, the Office of Management and Budget (OMB) is reviewing this information collection for emergency processing for 90 days, under OMB control number 3420–0024.

Comments are being solicited on the need for the information, its practical utility, the accuracy of the Agency's burden estimate, and on ways to minimize the reporting burden, including automated collection techniques and uses of other forms of technology. The proposed form under review is summarized below.

DATES: Comments must be received on or before May 4, 1999.

ADDRESSES: Copies of the subject form and the request for review prepared for submission to OMB may be obtained from the Agency Submitting Officer. Comments on the form should be submitted to the Agency Submitting Officer.

FOR FURTHER INFORMATION CONTACT: *OPIC Agency Submitting Officer:* Carol Brock, Records Manager, Overseas Private Investment Corporation, 1100 New York Avenue, N.W., Washington, D.C. 20527; 202/336–8563.

Summary of Form Under Review

Type of Request: New form.

Title: Client Year 2000 Program Assessment Checklist.

Form Number: OPIC–230

Frequency of Use: Once per project.

Type of Respondents: Business or other institutions (except farms).

Standard Industrial Classification Codes: All.

Description of Affected Public: U.S. companies or citizens investing overseas.

Reporting Hours: 1 hour per project.

Number of Responses: 500 per year.

Federal Cost: $5,000 per year.

Authority for Information Collection: Year 2000 Information and Readiness Disclosure Act of 1998.

Abstract (Needs and Uses): OPIC is surveying its clients to determine their status on addressing Year 2000 issues to ensure that OPIC's clients will be able to continue to make payments of premiums, principal, interest, and fees due to OPIC. The continued flow of these payments helps OPIC to ensure a positive cash flow and maintains its position as a self-sustaining agency.

Dated: March 2, 1999.

James R. Offutt,

Assistant General Counsel, Department of Legal Affairs.

[FR Doc. 99–5467 Filed 3–4–99; 8:45 am]

BILLING CODE 3210–01–M

INTERNATIONAL TRADE COMMISSION

[Investigation No. 731–TA–808 (Final)]

Certain Hot-rolled Steel Products From Russia

AGENCY: United States International Trade Commission.

ACTION: Scheduling of the final phase of an antidumping investigation.

SUMMARY: The Commission hereby gives notice of the scheduling of the final phase of antidumping investigation No. 731–TA–808 (Final) under section 735(b) of the Tariff Act of 1930 (19 U.S.C. 1673d(b)) (the Act) to determine whether an industry in the United States is materially injured or threatened with material injury, or the establishment of an industry in the United States is materially retarded, by reason of less-than-fair-value imports from Russia of certain hot-rolled steel products, provided for in headings 7208, 7210, 7211, 7212, 7225, and 7226 of the Harmonized Tariff Schedule of the United States.[1]

For further information concerning the conduct of this phase of the investigation, hearing procedures, and rules of general application, consult the Commission's Rules of Practice and Procedure, part 201, subparts A through E (19 CFR part 201), and part 207, subparts A and C (19 CFR part 207).

EFFECTIVE DATE: February 25, 1999.

FOR FURTHER INFORMATION CONTACT: Jeff Clark (202–205–3195), Office of Investigations, U.S. International Trade Commission, 500 E Street SW, Washington, DC 20436. Hearing-impaired persons can obtain information on this matter by contacting the Commission's TDD terminal on 202–205–1810. Persons with mobility impairments who will need special assistance in gaining access to the Commission should contact the Office of the Secretary at 202–205–2000. General information concerning the Commission may also be obtained by accessing its internet server (http://www.usitc.gov).

SUPPLEMENTARY INFORMATION:

Background

The final phase of this investigation is being scheduled as a result of an affirmative preliminary determination by the Department of Commerce that imports of certain hot-rolled steel products from Russia are being sold in the United States at less than fair value within the meaning of section 733 of the Act (19 U.S.C. 1673b). The investigation was requested in a petition filed on September 30, 1998, by Bethlehem Steel Corp. (Bethlehem, PA); U.S. Steel Group, a unit of USX Corp. (Pittsburgh, PA); Ispat Inland Steel (East Chicago, IN); LTV Steel Co., Inc. (Cleveland, OH); National Steel Corp. (Mishawaka, IN);[2] California Steel Industries (Fontana, CA); Gallatin Steel Co. (Ghent, KY); Geneva Steel (Vineyard, UT); Gulf States Steel, Inc. (Gadsden, AL); IPSCO Steel, Inc. (Muscatine, IA); Steel Dynamics (Butler, IN); Weirton Steel Corp. (Weirton, WV); Independent Steelworkers Union (Weirton, WV); and the United Steelworkers of America (Pittsburgh, PA).

Participation in the Investigation and Public Service List

Persons, including industrial users of the subject merchandise and, if the merchandise is sold at the retail level, representative consumer organizations, wishing to participate in the final phase of this investigation as parties must file an entry of appearance with the Secretary to the Commission, as provided in § 201.11 of the Commission's rules, no later than 21 days prior to the hearing date specified in this notice. A party that filed a notice of appearance during the preliminary phase of the investigation need not file an additional notice of appearance during this final phase. The Secretary will maintain a public service list containing the names and addresses of all persons, or their representatives, who are parties to the investigation.

Limited Disclosure of Business Proprietary Information (BPI) Under an Administrative Protective Order (APO) and BPI Service List

Pursuant to § 207.7(a) of the Commission's rules, the Secretary will make BPI gathered in the final phase of this investigation available to authorized applicants under the APO issued in the investigation, provided that the application is made no later than 21 days prior to the hearing date specified in this notice. Authorized applicants must represent interested parties, as defined by 19 U.S.C. 1677(9), who are parties to the investigation. A party granted access to BPI in the preliminary phase of the investigation need not reapply for such access. A separate service list will be maintained by the Secretary for those parties authorized to receive BPI under the APO.

Staff Report

The prehearing staff report in the final phase of this investigation will be placed in the nonpublic record on April 21, 1999, and a public version will be issued thereafter, pursuant to § 207.22 of the Commission's rules.

Hearing

The Commission will hold a hearing in connection with the final phase of this investigation beginning at 9:30 a.m. on May 4, 1999, at the U.S. International Trade Commission Building. Requests to appear at the hearing should be filed in writing with the Secretary to the Commission on or before April 28, 1999. A nonparty who has testimony that may aid the Commission's deliberations may request permission to present a short statement at the hearing. All parties and nonparties desiring to appear at the hearing and make oral presentations should attend a prehearing conference to be held at 9:30 a.m. on April 30, 1999, at the U.S. International Trade Commission Building. Oral testimony and written materials to be submitted at the public hearing are governed by §§ 201.6(b)(2), 201.13(f), and 207.24 of the Commission's rules. Parties must submit any request to present a portion of their hearing testimony *in camera* no later than 7 days prior to the date of the hearing.

Written Submissions

Each party who is an interested party shall submit a prehearing brief to the Commission. Prehearing briefs must conform with the provisions of § 207.23 of the Commission's rules; the deadline for filing is April 28, 1999. Parties may also file written testimony in connection with their presentation at the hearing, as provided in § 207.24 of the Commission's rules, and posthearing briefs, which must conform with the provisions of § 207.25 of the Commission's rules. The deadline for filing posthearing briefs is May 11, 1999; witness testimony must be filed no later than three days before the hearing. In addition, any person who has not entered an appearance as a party to the investigation may submit a written statement of information pertinent to the subject of the investigation on or before May 11, 1999. On June 3, 1999, the Commission will

[1] For purposes of this investigation, Commerce has defined the subject merchandise in 64 FR 9312, Feb. 25, 1999.

[2] National Steel Corp. is not a petitioner with respect to Japan.

make available to parties all information on which they have not had an opportunity to comment. Parties may submit final comments on this information on or before June 7, 1999, but such final comments must not contain new factual information and must otherwise comply with § 207.30 of the Commission's rules. All written submissions must conform with the provisions of § 201.8 of the Commission's rules; any submissions that contain BPI must also conform with the requirements of §§ 201.6, 207.3, and 207.7 of the Commission's rules. The Commission's rules do not authorize filing of submissions with the Secretary by facsimile or electronic means.

In accordance with §§ 201.16(c) and 207.3 of the Commission's rules, each document filed by a party to the investigation must be served on all other parties to the investigation (as identified by either the public or BPI service list), and a certificate of service must be timely filed. The Secretary will not accept a document for filing without a certificate of service.

Authority: This investigation is being conducted under authority of title VII of the Tariff Act of 1930; this notice is published pursuant to section 207.21 of the Commission's rules.

By order of the Commission.

Issued: March 1, 1999.

Donna R. Koehnke,

Secretary.

[FR Doc. 99–5401 Filed 3–4–99; 8:45 am]

BILLING CODE 7020–02–P

INTERNATIONAL TRADE COMMISSION

[Investigations Nos. 701–TA–384 (Final) and 731–TA–806–807 (Final)]

Certain Hot-rolled Steel Products From Brazil and Japan

AGENCY: United States International Trade Commission.

ACTION: Scheduling of the final phase of countervailing duty and antidumping investigations.

SUMMARY: The Commission hereby gives notice of the scheduling of the final phase of countervailing duty investigation No. 701–TA–384 (Final) under section 705(b) of the Tariff Act of 1930 (19 U.S.C. 1671d(b)) (the Act) and the final phase of antidumping investigations Nos. 731–TA–806–807 (Final) under section 735(b) of the Act (19 U.S.C. 1673d(b)) to determine whether an industry in the United States is materially injured or threatened with material injury, or the establishment of an industry in the United States is materially retarded, by reason of subsidized imports from Brazil and less-than-fair-value imports from Brazil and Japan of certain hot-rolled steel products, provided for in headings 7208, 7210, 7211, 7212, 7225, and 7226 of the Harmonized Tariff Schedule of the United States.[1]

For further information concerning the conduct of this phase of the investigations, hearing procedures, and rules of general application, consult the Commission's Rules of Practice and Procedure, part 201, subparts A through E (19 CFR part 201), and part 207, subparts A and C (19 CFR part 207).

EFFECTIVE DATE: February 19, 1999.

FOR FURTHER INFORMATION CONTACT: Jeff Clark (202–205–3195), Office of Investigations, U.S. International Trade Commission, 500 E Street SW, Washington, DC 20436. Hearing-impaired persons can obtain information on this matter by contacting the Commission's TDD terminal on 202–205–1810. Persons with mobility impairments who will need special assistance in gaining access to the Commission should contact the Office of the Secretary at 202–205–2000. General information concerning the Commission may also be obtained by accessing its internet server (http://www.usitc.gov).

SUPPLEMENTARY INFORMATION:

Background

The final phase of these investigations is being scheduled as a result of affirmative preliminary determinations by the Department of Commerce that certain benefits which constitute subsidies within the meaning of section 703 of the Act (19 U.S.C. 1671b) are being provided to manufacturers, producers, or exporters in Brazil of certain hot-rolled steel products, and that such products from Brazil and Japan are being sold in the United States at less than fair value within the meaning of section 733 of the Act (19 U.S.C. 1673b). The investigations were requested in a petition filed on September 30, 1998, by Bethlehem Steel Corp. (Bethlehem, PA); U.S. Steel Group, a unit of USX Corp. (Pittsburgh, PA); Ispat Inland Steel (East Chicago, IN); LTV Steel Co., Inc. (Cleveland, OH); National Steel Corp. (Mishawaka, IN);[2] California Steel Industries (Fontana, CA); Gallatin Steel Co. (Ghent, KY); Geneva Steel (Vineyard, UT); Gulf States Steel, Inc. (Gadsden, AL); IPSCO Steel, Inc. (Muscatine, IA); Steel Dynamics (Butler, IN); Weirton Steel Corp. (Weirton, WV); Independent Steelworkers Union (Weirton, WV); and the United Steelworkers of America (Pittsburgh, PA).

Participation in the Investigations and Public Service List

Persons, including industrial users of the subject merchandise and, if the merchandise is sold at the retail level, representative consumer organizations, wishing to participate in the final phase of these investigations as parties must file an entry of appearance with the Secretary to the Commission, as provided in § 201.11 of the Commission's rules, no later than 21 days prior to the hearing date specified in this notice. A party that filed a notice of appearance during the preliminary phase of the investigations need not file an additional notice of appearance during this final phase. The Secretary will maintain a public service list containing the names and addresses of all persons, or their representatives, who are parties to the investigations.

Limited Disclosure of Business Proprietary Information (BPI) Under an Administrative Protective Order (APO) and BPI Service List

Pursuant to § 207.7(a) of the Commission's rules, the Secretary will make BPI gathered in the final phase of these investigations available to authorized applicants under the APO issued in the investigations, provided that the application is made no later than 21 days prior to the hearing date specified in this notice. Authorized applicants must represent interested parties, as defined by 19 U.S.C. 1677(9), who are parties to the investigations. A party granted access to BPI in the preliminary phase of the investigations need not reapply for such access. A separate service list will be maintained by the Secretary for those parties authorized to receive BPI under the APO.

Staff Report

The prehearing staff report in the final phase of these investigations will be placed in the nonpublic record on April 21, 1999, and a public version will be issued thereafter, pursuant to § 207.22 of the Commission's rules.

Hearing

The Commission will hold a hearing in connection with the final phase of these investigations beginning at 9:30 a.m. on May 4, 1999, at the U.S. International Trade Commission Building. Requests to appear at the

---

[1] For purposes of these investigations, Commerce has defined the subject merchandise in 64 FR 8291, Feb. 19, 1999.

[2] National Steel Corp. is not a petitioner with respect to Japan.

hearing should be filed in writing with the Secretary to the Commission on or before April 28, 1999. A nonparty who has testimony that may aid the Commission's deliberations may request permission to present a short statement at the hearing. All parties and nonparties desiring to appear at the hearing and make oral presentations should attend a prehearing conference to be held at 9:30 a.m. on April 30, 1999, at the U.S. International Trade Commission Building. Oral testimony and written materials to be submitted at the public hearing are governed by §§ 201.6(b)(2), 201.13(f), and 207.24 of the Commission's rules. Parties must submit any request to present a portion of their hearing testimony *in camera* no later than 7 days prior to the date of the hearing.

Written Submissions

Each party who is an interested party shall submit a prehearing brief to the Commission. Prehearing briefs must conform with the provisions of § 207.23 of the Commission's rules; the deadline for filing is April 28, 1999. Parties may also file written testimony in connection with their presentation at the hearing, as provided in § 207.24 of the Commission's rules, and posthearing briefs, which must conform with the provisions of § 207.25 of the Commission's rules. The deadline for filing posthearing briefs is May 11, 1999; witness testimony must be filed no later than three days before the hearing. In addition, any person who has not entered an appearance as a party to the investigations may submit a written statement of information pertinent to the subject of the investigations on or before May 11, 1999. On June 3, 1999, the Commission will make available to parties all information on which they have not had an opportunity to comment. Parties may submit final comments on this information on or before June 7, 1999, but such final comments must not contain new factual information and must otherwise comply with § 207.30 of the Commission's rules. All written submissions must conform with the provisions of § 201.8 of the Commission's rules; any submissions that contain BPI must also conform with the requirements of §§ 201.6, 207.3, and 207.7 of the Commission's rules. The Commission's rules do not authorize filing of submissions with the Secretary by facsimile or electronic means.

In accordance with §§ 201.16(c) and 207.3 of the Commission's rules, each document filed by a party to the investigations must be served on all other parties to the investigations (as identified by either the public or BPI service list), and a certificate of service must be timely filed. The Secretary will not accept a document for filing without a certificate of service.

Authority: These investigations are being conducted under authority of title VII of the Tariff Act of 1930; this notice is published pursuant to § 207.21 of the Commission's rules.

Issued: March 1, 1999.

By order of the Commission.

Donna R. Koehnke,

Secretary.

[FR Doc. 99–5402 Filed 3–4–99; 8:45 am]

BILLING CODE 7020–02–P

DEPARTMENT OF JUSTICE

Drug Enforcement Administration

Importer of Controlled Substances; Notice of Registration

By Notice dated October 1, 1998, and published in the **Federal Register** on October 9, 1998, (63 FR 54491), Chiragene, Inc., 7 Powder Horn Drive, Warren, New Jersey 07509, made application to the Drug Enforcement Administration (DEA) to be registered as an importer of the basic classes of controlled substances listed below:

Drug	Schedule
2,5-Dimethoxyamphetamine (7396).	I
Phenylacetone (8501)	II

By letter dated February 11, 1998, Chiragene, Inc. has withdrawn its application for registration to import 2,5-Dimethoxyamphetamine. Therefore, 2,5-Dimethoxyamphetamine is hereby deleted from the firm's application for registration as an importer.

The firm plans to import the phenylacetone to manufacture amphetamine.

No comments or objections have been received. DEA has considered the factors in Title 21, United States Code, section 823(a) and determined that the registration of Chiragene, Inc. to import the listed controlled substances is consistent with the public interest and with United States obligations under international treaties, conventions, or protocols in effect on May 1, 1971, at this time. Therefore, pursuant to section 1008(a) of the Controlled Substances Import and Export Act and in accordance with Title 21, Code of Federal Regulations, section 1311.42, the above firm is granted registration as an importer of phenylacetone.

John H. King,

Deputy Assistant Administrator, Office of Diversion Control, Drug Enforcement Administration.

[FR Doc. 99–5404 Filed 3–4–99; 8:45 am]

BILLING CODE 4410–09–M

DEPARTMENT OF JUSTICE

Drug Enforcement Administration

Manufacturer of Controlled Substances; Notice of Application

Pursuant to Section 1301.33(a) of Title 21 of the Code of Federal Regulations (CFR), this is notice that on January 25, 1999, Ganes Chemicals, Inc., Industrial Park Road, Pennsville, New Jersey 08070, made application by renewal to the Drug Enforcement Administration (DEA) to be registered as a bulk manufacturer of the basic classes of controlled substances listed below:

Drug	Schedule
Methylphenidate (1724)	II
Amobarbital (2125)	II
Pentobarbital (2270)	II
Secobarbital (2315)	II
Glutethimide (2550)	II
Methadone (9250)	II
Methadone-intermediate (9254)	II
Dextropropoxyphene, bulk (non-dosage forms) (9273).	II

The firm plans to manufacture the listed controlled substances for distribution as bulk products to its customers.

Any other such applicant and any person who is presently registered with DEA to manufacture such substance may file comments or objections to the issuance of the proposed registration.

Any such comments or objections may be addressed, in quintuplicate, to the Deputy Assistant Administrator, Office of Diversion Control, Drug Enforcement Administration, United States Department of Justice, Washington, D.C. 20537, Attention: DEA Federal Register Representative (CCR), and must be filed no later than May 4, 1999.

Dated: February 23, 1999.

John H. King,

Deputy Assistant Administrator, Office of Diversion Control, Drug Enforcement Administration.

[FR Doc. 99–5406 Filed 3–4–99; 8:45 am]

BILLING CODE 4410–09–M

DEPARTMENT OF JUSTICE

Drug Enforcement Administration

Importer of Controlled Substances; Notice of Registration

By Notice dated June 24, 1998, and published in the **Federal Register** on July 9, 1998, (63 FR 37139), Radian International LLC, 8401 North Mopac Blvd., P.O. Box 201088, Austin, Texas 78720, made application by renewal to the Drug Enforcement Administration to be registered as an importer of the basic classes of controlled substances listed below:

Drug	Schedule
Cathinone (1235)	I
Methcathinone (1237)	I
N-Ethylamphetamine (1475)	I
Ibogaine (7260)	I
4-Bromo-2,5-dimethoxyamphetamine (7391).	I
4-Bromo-2,5-dimethoxyphenethylamine (7392).	I
4-Methyl-2,5-dimethoxyamphetamine (7395).	I
2,5-Dimethoxyamphetamine (7396).	I
2,5-Dimethoxy-4-ethylamphetamine (7399).	I
5-Methoxy-3,4-methylenedioxyamphetamine (7401).	I
3,4-Methylenedioxy-N-ethylamphetamine (7404).	I
3,4-Methylenedioxyamphetamine (7400).	I
3,4-Methylenedioxymethamphetamine (7405).	I
4-Methoxyamphetamine (7411)	I
Psilocybin (7437)	I
Psilocyn (7438)	I
Etorphine (except HCL) (9056)	I
Heroin (9200)	I
Pholcodine (9314)	I
Amphetamine (1100)	II
Methamphetamine (1105)	II
Amobarbital (2125)	II
Pentobarbital (2270)	II
Cocaine (9041)	II
Codeine (9050)	II
Dihydrocodeine (9120)	II
Oxycodone (9143)	II
Hydromorphone (9150)	II
Benzoylecgonine (9180)	II
Ethylmorphine (9190)	II
Meperidine (9230)	II
Dextropropoxyphene, bulk (non-dosage forms) (9273).	II
Morphine (9300)	II
Thebaine (9333)	II
Levo-alphacetylmethadol (9648)	II
Oxymorphone (9652)	II

The firm plans to import small quantities of the listed controlled substances for the manufacture of analytical reference standards.

No comments or objections have been received. DEA has considered the factors in Title 21, United States Code, Section 823(a) and determined that the registration of Radian International LLC to import the listed controlled substances is consistent with the public interest and with United States obligations under international treaties, conventions, or protocols in effect on May 1, 1971, at this time. DEA has investigated Radian International LLC on a regular basis to ensure that the company's continued registration is consistent with the public interest. These investigations have included inspection and testing of the company's physical security systems, audits of the company's records, verification of the company's compliance with state and local laws, and a review of the company's background and history. Therefore, pursuant to Section 1008(a) of the Controlled Substances Import and Export Act and in accordance with Title 21, Code of Federal Regulations, Section 1311.42, the above firm is granted registration as an importer of the basic classes of controlled substances listed above.

Dated: February 23, 1999.

John M. King,

Deputy Assistant Administrator, Office of Diversion Control, Drug Enforcement Administration.

[FR Doc. 99–5405 Filed 3–4–99; 8:45 am]

BILLING CODE 4410–09–M

DEPARTMENT OF JUSTICE

Drug Enforcement Administration

Manufacturer of Controlled Substances Notice of Application

Pursuant to Section 1301.33(a) of Title 21 of the Code of Federal Regulations (CFR), this is notice that in a letter dated January 20, 1999, Sigma Aldrich Research Biochemicals, Inc., Attn: Richard Milius, 1–3 Strathmore Road, Natick, Massachusetts 01760, made application to the Drug Enforcement Administration (DEA) for registration as a bulk manufacturer of fentanyl (9801), a basic class of controlled substance in Schedule II.

The firms plans to synthesize the fentanyl molecule to produce small quantities of fentanyl free base.

Any other such applicant and any person who is presently registered with DEA to manufacture such substance may file comments or objections to the issuance of the proposed registration.

Any such comments or objections may be addressed, in quintuplicate, to the Deputy Assistant Administrator, Office of Diversion Control, Drug Enforcement Administration, United States Department of Justice, Washington, D.C. 20537, Attention: DEA Federal Register Representative (CCR), and must be filed no later than May 4, 1999.

Dated: February 23, 1999.

John H. King,

Deputy Assistant Administrator, Office of Diversion Control, Drug Enforcement Administration.

[FR Doc. 99–5407 Filed 3–4–99; 8:45 am]

BILLING CODE 4410–09–M

DEPARTMENT OF LABOR

Employment Standards Administration

Wage and Hour Division; Minimum Wages for Federal and Federally Assisted Construction; General Wage Determination Decisions

General wage determination decisions of the Secretary of Labor are issued in accordance with applicable law and are based on the information obtained by the Department of Labor from its study of local wage conditions and data made available from other sources. They specify the basic hourly wage rates and fringe benefits which are determined to be prevailing for the described classes of laborers and mechanics employed on construction projects of a similar character and in the localities specified therein.

The determinations in these decisions of prevailing rates and fringe benefits have been made in accordance with 29 CFR part 1, by authority of the Secretary of Labor pursuant to the provisions of the Davis-Bacon Act of March 3, 1931, as amended (46 Stat. 1494, as amended, 40 U.S.C. 276a) and of other Federal statutes referred to in 29 CFR part 1, appendix, as well as such additional statutes as may from time to time be enacted containing provisions for the payment of wages determined to be prevailing by the Secretary of Labor in accordance with the Davis-Bacon Act. The prevailing rates and fringe benefits determined in these decisions shall, in accordance with the provisions of the foregoing statutes, constitute the minimum wages payable on Federal and federally assisted construction projects to laborers and mechanics of the specified classes engaged on contract work of the character and in the localities described therein.

Good cause is hereby found for not utilizing notice and public comment procedure thereon prior to the issuance of these determinations as prescribed in 5 U.S.C. 553 and not providing for delay

in the effective date as prescribed in that section, because the necessity to issue current construction industry wage determinations frequently and in large volume causes procedures to be impractical and contrary to the public interest.

General wage determination decisions, and modifications and supersedes decision thereto, contain no expiration dates and are effective from their date of notice in the **Federal Register**, or on the date written notice is received by the agency, whichever is earlier. These decisions are to be used in accordance with the provisions of 29 CFR Parts 1 and 5. Accordingly, the applicable decision, together with any modifications issued, must be made a part of every contract for performance of the described work within the geographic area indicated as required by an applicable Federal prevailing wage law and 29 CFR part 5. The wage rates and fringe benefits notice of which is published herein, and which are contained in the Government Printing Office (GPO) document entitled ''General Wage Determinations Issued Under The Davis-Bacon And Related Acts,'' shall be the minimum paid by contractors and subcontractors to laborers and mechanics.

Any person, organization, or governmental agency having an interest in the rates determined as prevailing is encouraged to submit wage rate and fringe benefit information for consideration by the Department. Further information and self-explanatory forms for the purpose of submitting this date may be obtained by writing to the U.S. Department of Labor, Employment Standards Administration, Wage and Hour Division, Division of Wage Determinations, 200 Constitution Avenue, NW, Room S–3014, Washington, DC 20210.

Modifications to General Wage Determination Decisions

The number of decisions listed in the Government Printing Office document entitled ''General Wage Determinations Issued Under the Davis—Bacon and Related Acts'' being modified are listed by Volume and State. Dates of publication in the **Federal Register** are in parentheses following the decisions being modified.

Volume I

None

Volume II

None

Volume III

None

Volume IV

None

Volume V

None

Volume VI

None

Volume VII

None

General Wage Determination Publication

General wage determinations issued under the Davis-Bacon and related Acts, including those noted above, may be found in the Government Printing Office (GPO) document entitled ''General Wage Determinations Issued Under The Davis-Bacon and Related Acts.'' The publication is available at each of the 50 Regional Government Depository Libraries and many of the 1,400 Government Depository Libraries across the country.

The general wage determinations issued under the Davis-Bacon and related Acts are available electronically by subscription to the FedWorld Bulletin Board System of the National Technical Information Service (NTIS) of the U.S. Department of Commerce at 1–800–363–2068.

Hard-copy subscriptions may be purchased form: Superintendent of Documents, U.S. Government Printing Office, Washington, DC 20402, (202) 512–1800.

When ordering hard-copy subscription(s), be sure to specify the State(s) of interest, since subscriptions may be ordered for any or all of the seven separate volumes, arranged by state. Subscriptions include an annual edition (issued in January or February) which includes all current general wage determinations for the States covered by each volume. Throughout the remainder of the year, regular weekly updates are distributed to subscribers.

Signed at Washington, DC this 25th day of February 1999.

Carl J. Poleskey,

Chief, Branch of Construction Wage Determinations.

[FR Doc. 99–5179 Filed 3–4–99; 8:45 am]

BILLING CODE 4510–27–M

MEDICARE PAYMENT ADVISORY COMMISSION

Commission Meeting

AGENCY: Medicare Payment Advisory Commission.

ACTION: Notice of meeting.

SUMMARY: The Commission will hold its next public meeting on Thursday, March 18, 1999 and Friday, March 19, 1999 at the Embassy Suites Hotel, 1250 22nd Street, NW., Washington, DC. The meeting is tentatively scheduled to begin at 9:45 a.m. on March 18, and at 8:30 a.m. on March 19.

The Commission will discuss informed consumer choice, quality assurance in traditional Medicare, addressing health care errors, access to health care services, beneficiary financial liability, care at the end of life, care for beneficiaries with end-stage renal disease, payment under managed care programs for the frail elderly, and graduate medical education.

Agendas will be mailed on March 3, 1999. The final agenda will be available on the Commission's web site (www.MedPAC.gov).

ADDRESSES: MedPAC's address is: 1730 K Street, NW., Suite 800, Washington, DC 20006. The telephone number is (202) 653–7220.

FOR FURTHER INFORMATION CONTACT: Diane Ellison, Office Manager, (202) 653–7220.

SUPPLEMENTARY INFORMATION: If you are not on the Commission mailing list and wish to receive an agenda, please call (202) 653–7220.

Murray N. Ross,

Executive Director.

[FR Doc. 99–5425 Filed 3–4–99; 8:45 am]

BILLING CODE 6820–BN–M

NATIONAL AERONAUTICS AND SPACE ADMINISTRATION

[Notice 99–040]

Agency Information Collection: Submission for OMB Review, Comment Request

AGENCY: National Aeronautics and Space Administration (NASA).

SUMMARY: The National Aeronautics and Space Administration has submitted to the Office of Management and Budget (OMB) the following proposal for the collection of information under the provisions of the Paperwork Reduction Act (44 U.S.C. Chapter 35).

DATES: Comments on this proposal should be received by April 5, 1999.

ADDRESSES: All comments should be addressed to Mr. Robert Yang/211, National Aeronautics and Space Administration, Langley Research Center, Hampton, VA 23681.

FOR FURTHER INFORMATION CONTACT: Ms. Carmela Simonson, Office of the Chief Information Officer, (202) 358–1223.

Reports: None.

Title: NASA Commercial Technology Program (CTP) Client Feedback Survey.

OMB Number: 2700–.

Type of Review: New.

Need and Uses: This collection will be used to evaluate agency CTP business practices in order to determine their adequacy and efficiency, and to promote the development and use of business principles, standards and guidelines.

Affected Public: Business or other for-profit.

Estimated Number of Respondents: 500.

Responses Per Respondent: 1.

Estimated Annual Responses: 300.

Estimated Hours Per Request: ¼ hr.

Estimated Annual Burden Hours: 75.

Frequency of Report: Annually.

Dr. David B. Nelson,

Acting Deputy Chief Information Officer, Office of the Administrator.

[FR Doc. 99–5512 Filed 3–4–99; 8:45 am]

BILLING CODE 7510–01–P

NATIONAL CREDIT UNION ADMINISTRATION

Agency Information Collection Activities: Submission to OMB for Review; Comment Request

AGENCY: National Credit Union Administration (NCUA).

ACTION: Request for comment.

SUMMARY: The NCUA is resubmitting the following extensions of currently approved collections to the Office of Management and Budget (OMB) for review and clearance under the Paperwork Reduction Act of 1995 (Public Law 104–13, 44 U.S.C. Chapter 35). These information collections were originally published on December 30, 1998. No comments were received.

DATES: Comments will be accepted until April 5, 1999.

ADDRESSES: Interested parties are invited to submit written comments to the NCUA Clearance Officer or OMB Reviewer listed below:

Clearance Officer: Mr. James L. Baylen (703) 518–6411, National Credit Union Administration, 1775 Duke Street, Alexandria, Virginia 22314–3428, Fax No. 703–518–6433, E-mail: jbaylen@ncua.gov.

OMB Reviewer: Alexander T. Hunt (202) 395–7860, Office of Management and Budget, Room 10226, New Executive Office Building, Washington, DC 20503.

FOR FURTHER INFORMATION CONTACT: Copies of the information collection requests, with applicable supporting documentation, may be obtained by calling the NCUA Clearance Officer, James L. Baylen, (703) 518–6411.

SUPPLEMENTARY INFORMATION: Proposals for the following collections of information:

OMB Number: 3133–0032.

Form Number: N/A.

Type of Review: Extension of a currently approved collection.

Title: Records Preservation. Part 749 of NCUA Regulations directs each credit union to store copies of their members' share and loan balances away from the credit union's premises.

Respondents: All Credit Unions.

Estimated No. of Respondents/ Recordkeepers: 11,127.

Estimated Burden Hours Per Response: 2 hours.

Frequency of Response: Quarterly.

Estimated Total Annual Burden Hours: 22,254.

Estimated Total Annual Cost: $1,112,700.

OMB Number: 3133–0052.

Form Number: N/A.

Type of Review: Extension of a currently approved collection.

Title: Federal Credit Union (FCU) Membership Applications and Denials. Article II, section 2 of the FCU Bylaws requires persons applying for membership in an FCU to complete an application. The Federal Credit Union Act directs the FCU to provide the applicant with written reasons when the FCU denies a membership application.

Respondents: All Federal Credit Unions.

Estimated No. of Respondents/ Recordkeepers: 1,722.

Estimated Burden Hours Per Response: 1 hour.

Frequency of Response: On occasion.

Estimated Total Annual Burden Hours: 1,722.

Estimated Total Annual Cost: N/A.

OMB Number: 3133–0058.

Form Number: N/A.

Type of Review: Extension of a currently approved collection.

Title: Credit Committee Records. The standard Federal Credit Union (FCU) Bylaws require an FCU to maintain records of its loan approvals and denials.

Respondents: All Federal Credit Unions.

Estimated No. of Respondents/ Recordkeepers: 6,888.

Estimated Burden Hours Per Response: 8 hours.

Frequency of Response: Other. Twice a month.

Estimated Total Annual Burden Hours: 55,104.

Estimated Total Annual Cost: $926,298.

OMB Number: 3133–0080.

Form Number: N/A.

Type of Review: Extension of a currently approved collection.

Title: Special Meetings of Federal Credit Union (FCU) Board. The standard FCU Bylaws require a written request from a majority of the FCU's directors to the FCU's president in order for the FCU to hold a special meeting of directors.

Respondents: All Federal Credit Unions.

Estimated No. of Respondents/ Recordkeepers: 6,888.

Estimated Burden Hours Per Response: 2.5 hours.

Frequency of Response: On occasion.

Estimated Total Annual Burden Hours: 275.6.

Estimated Total Annual Cost: N/A.

OMB Number: 3133–0117.

Form Number: N/A.

Type of Review: Extension of a currently approved collection.

Title: Designation of Low Income Status. Credit unions that serve predominantly low income members must receive a low income designation from NCUA before they can accept deposits from all sources.

Respondents: Certain credit unions that serve predominantly low income members.

Estimated No. of Respondents/ Recordkeepers: 15.

Estimated Burden Hours Per Response: 15 hours.

Frequency of Response: Other. Once.

Estimated Total Annual Burden Hours: 225.

Estimated Total Annual Cost: $3,600.

OMB Number: 3133–0130.

Form Number: N/A.

Type of Review: Extension of a currently approved collection.

Title: Written Reimbursement Policy. Each Federal Credit Union (FCU) must draft a written reimbursement policy to ensure that the FCU makes payments to its director within the guidelines that the FCU has established in advance and to enable examiners to easily verify compliance by comparing the policy to the actual reimbursements.

Respondents: All Federal Credit Unions.

Estimated No. of Respondents/ Recordkeepers: 6,897.

Estimated Burden Hours Per Response: 1 hour.

Frequency of Response: Other. Once and update.

Estimated Total Annual Burden Hours: 3,462.

Estimated Total Annual Cost: N/A.

By the National Credit Union Administration Board on February 24, 1999.

Becky Baker,

Secretary of the Board.

[FR Doc. 99–5403 Filed 3–4–99; 8:45 am]

BILLING CODE 7535–01–P

NATIONAL SCIENCE FOUNDATION

Special Emphasis Panel in Engineering Education and Centers; Notice of Meeting

In accordance with Federal Advisory Committee Act (Pub. L. 92–463, as amended), the National Science Foundation announces the following meeting:

Name: Special Emphasis Panel in Engineering Education and Centers (173).

Date/Time: March 25–26, 1999, 8:30 a.m. to 5:00 p.m.

Place: National Science Foundation, Room 320, 4201 Wilson Boulevard, Arlington, VA 22230.

Type of Meeting: Closed.

Contact Person: Tap Mukherjee, Program Director, Engineering Education and Centers Division, National Science Foundation, Room 585, 4201 Wilson Boulevard, Arlington, VA 22230.

Purpose of Meeting: To provide advice and recommendations concerning proposals submitted to NSF for financial support.

Agenda: To review and evaluate Engineering Research Centers proposals as part of the selection process for awards.

Reason for Closing: The proposals being reviewed include information of a proprietary or confidential nature, including technical information; financial data, such as salaries; and personal information concerning individuals associated with the proposals. These matters are exempt under 5 U.S.C. 552b.(c)(4) and (6) of the Government in the Sunshine Act.

Dated: March 1, 1999.

Linda Allen-Benton,

Acting Director, Division of Human Resource Management.

[FR Doc. 99–5477 Filed 3–4–99; 8:45 am]

BILLING CODE 7555–01–M

NATIONAL SCIENCE FOUNDATION

Special Emphasis Panel in Engineering Educational Centers; Notice of Meeting

In accordance with Federal Advisory Committee Act (Pub. L. 92–463, as amended), the National Science Foundation announces the following meeting:

Name: Special Emphasis Panel in Engineering Education and Centers (173).

Date/Time: March 23–24, 1999 8:30 a.m. to 5:00 p.m.

Place: National Science Foundation, Room 365, 4201 Wilson Boulevard, Arlington, VA 22230.

Type of Meeting: Closed.

Contact Person: John Hurt, Program Director, Engineering Education and Centers Division, National Science Foundation, Room 585, 4201 Wilson Boulevard, Arlington, VA 22230.

Purpose of Meeting: To provide advice and recommendations concerning proposals submitted to NSF for financial support.

Agenda: To review and evaluate Engineering Research Centers Proposals as part of the selection process for awards.

Reason for Closing: The proposals being reviewed include information of a proprietary or confidential nature, including technical information; financial data, such as salaries; and personal information concerning individuals associated with the proposals. These matters are exempt under 5 U.S.C. 552b. (c)(4) and (6) of the Government in the Sunshine Act.

Dated: March 1, 1999.

Linda Allen-Benton,

Acting Director, Division of Human Resource Management.

[FR Doc. 99–5478 Filed 3–4–99; 8:45 am]

BILLING CODE 7555–01–M

NATIONAL SCIENCE FOUNDATION

Special Emphasis Panel in Experimental and Integrative Activities; Notice of Meeting

In accordance with the Federal Advisory Committee Act (Pub. L. 92–463, as amended), the National Science Foundation announces the following meeting.

Name: Special Emphasis Panel in Experimental and Integrative Activities (1373).

Date and Time: March 23, 1999; 8:30 am to 5:00 pm.

Place: Room 1150, National Science Foundation, 4201 Wilson Blvd., Arlington, VA.

Type of Meeting: Closed.

Contact Person(s): Dr. Anthony Maddox, Program Director, Division of Experimental and Integrative Activities, National Science Foundation, Room 1160, 4201 Wilson Boulevard, Arlington, VA 22230. Telephone: (703) 306–1980.

Purpose of Meeting: To provide advice and recommendations concerning proposals submitted to the National Science Foundation for financial support.

Agenda: To review and evaluate CISE Postdoctoral Research Associates in Experimental Computer Science proposals as part of the selection process for awards.

Reason for Closing: The proposals being reviewed include information of a proprietary or confidential nature, including technical information; financial data, such as salaries, and personal information concerning individuals associated with the proposals. These matters are exempt under 5 U.S.C. 552b(c), (4) and (6) of the Government in the Sunshine Act.

Dated: March 1, 1999.

Linda Allen-Benton,

Acting Director, Division of Human Resource Management.

[FR Doc. 99–5476 Filed 3–4–99; 8:45 am]

BILLING CODE 7555–01–M

NUCLEAR REGULATORY COMMISSION

[Docket Nos. STN 50–454 and STN 50–455]

Commonwealth Edison Company (Byron Station, Units 1 and 2); Exemption

I

The Commonwealth Edison Company (ComEd, the licensee) is the holder of Facility Operating License Nos. NPF–37 and NPF–66, which authorize operation of Byron Station, Units 1 and 2. The licenses provide, among other things, that the licensee is subject to all rules, regulations, and orders of the Commission now or hereafter in effect.

The facility consists of two pressurized-water reactors at the licensee's site in Ogle County, Illinois.

II

Section 50.44 of Title 10 of the Code of Federal Regulations, ''Standards for Combustible Gas Control System in Light-Water-Cooled Power Reactors,'' requires, among other items, that each boiling or pressurized light-water nuclear power reactor fueled with oxide pellets within cylindrical zircaloy or ZIRLO cladding, must, as provided in paragraphs (b) through (d) of this section, include means for control of hydrogen gas that may be generated, following a postulated loss-of-coolant accident (LOCA) by—(1) Metal-water reaction involving the fuel cladding and the reactor coolant, (2) Radiolytic decomposition of the reactor coolant, and (3) Corrosion of metals.

Section 50.46 of Title 10 of the Code of Federal Regulations, ''Acceptance Criteria for Emergency Core Cooling Systems for Light-Water Nuclear Power Reactors,'' requires, among other items, that each boiling or pressurized light-water nuclear power reactor fueled with uranium oxide pellets within cylindrical zircaloy or ZIRLO cladding must be provided with an emergency core cooling system (ECCS) that must be designed so that its calculated cooling performance following postulated LOCAs conform to the criteria set forth in paragraph (b) of this section. ECCS cooling performance must be calculated in accordance with an acceptable evaluation model and must be calculated for a number of postulated

LOCAs of different sizes, locations, and other properties sufficient to provide assurance that the most severe postulated LOCAs are calculated.

Appendix K to Part 50 of Title 10 of the Code of Federal Regulations, ''ECCS Evaluation Models,'' requires, among other items, that the rate of energy release, hydrogen generation, and cladding oxidation from the metal/water reaction shall be calculated using the Baker-Just equation.

10 CFR 50.44, 10 CFR 50.46, and 10 CFR Part 50, Appendix K, make no provisions for use of fuel rods clad in a material other than Zircaloy or ZIRLO. The licensee has requested the use of a Lead Test Assembly (LTA) with a tin composition that is less than the licensing basis for ZIRLO tin composition, as defined in Westinghouse design specifications.

Section 50.12 of Title 10 of the Code of Federal Regulations, ''Specific Exemptions,'' states, among other items, the Commission may, upon application by any interested person or upon its own initiative, grant exemptions from the requirements of the regulations of this part, which are authorized by law, will not present an undue risk to the public health and safety, and are consistent with the common defense and security. The Commission will not consider granting an exemption unless special circumstances are present. Special circumstances are present whenever application of the regulation in the particular circumstances would not serve the underlying purpose of the rule or is not necessary to achieve the underlying purpose of the rule.

III

The licensee provided testing and evaluations which demonstrated that the intent of the regulations continue to be met since all aspects of safety, including mechanical, neutronic, thermal hydraulic, transient, and LOCA analyses results fall within those approved for the current 17x17 VANTAGE + fuel assemblies Analysis of Record for Byron Station, Units 1 and 2. The staff has reviewed the licensee's analysis and concluded in a Safety Evaluation dated February 26, 1999, that the licensee has demonstrated prudent judgment in the use of LTAs, and the licensee's analyses remain bounding for the LTAs. Therefore, application of the regulation in the particular circumstances is not necessary to achieve the underlying purpose of the rule.

IV

The Commission has determined that, pursuant to 10 CFR 50.12, this exemption is authorized by law, will not endanger life or property or the common defense and security, and is otherwise in the public interest. Therefore, the Commission hereby grants the Commonwealth Edison Company an exemption from the requirements of 10 CFR 50.44, 10 CFR 50.46, and 10 CFR Part 50, Appendix K.

Pursuant to 10 CFR 51.32, the Commission has determined that the granting of this exemption will have no significant impact on the environment (64 FR 9549).

This exemption is effective upon issuance.

Dated at Rockville, Maryland, this 26th day of February, 1999.

For the Nuclear Regulatory Commission.

Roy P. Zimmerman,

Acting Director, Office of Nuclear Reactor Regulation.

[FR Doc. 99–5474 Filed 3–4–99; 8:45 am]

BILLING CODE 7590–01–P

NUCLEAR REGULATORY COMMISSION

[Docket No. 50–368]

Entergy Operations, Inc. (Arkansas Nuclear One, Unit No. 2); Notice of Withdrawal of Application for Amendment to Facility Operating License

The U.S. Nuclear Regulatory Commission (the Commission) has granted the request of Entergy Operations, Inc. (the licensee) to withdraw its May 19, 1995, application for proposed amendment to Facility Operating License No. NPF–6 for Arkansas Nuclear One, Unit No. 2, located in Pope County, Arkansas.

The proposed amendment would have extended the allowed outage time (AOT) for a train of low pressure safety injection (LPSI) inoperable at Arkansas Nuclear One, Unit No. 2 from 72 hours to 7 days.

The Commission had previously issued a proposed no significant hazards consideration determination published in the **Federal Register** on August 2, 1995 (60 FR 39440). However, by letter dated February 16, 1999, the licensee withdrew the proposed change.

For further details with respect to this action, see the application for the amendment dated May 19, 1995, and the licensee's letter dated February 16, 1999, which withdrew the application for the license amendment. The above documents are available for public inspection at the Commission's Public Document Room, the Gelman Building, 2120 L Street, N.W. Washington, DC, and at the Tomlinson Library, Arkansas Tech University, Russelville, AR 72801.

Dated at Rockville, Maryland, this 26th day of February, 1999.

For the Nuclear Regulatory Commission.

M. Christopher Nolan,

Project Manager, Project Directorate IV–1, Division of Licensing Project Management Office of Nuclear Reactor Regulation.

[FR Doc. 99–5475 Filed 3–4–99; 8:45 am]

BILLING CODE 7590–01–P

RAILROAD RETIREMENT BOARD

Determination of Quarterly Rate of Excise Tax for Railroad Retirement Supplemental Annuity Program

In accordance with directions in Section 3221(c) of the Railroad Retirement Tax Act (26 U.S.C., Section 3221(c)), the Railroad Retirement Board has determined that the excise tax imposed by such Section 3221(c) on every employer, with respect to having individuals in his employ, for each work-hour for which compensation is paid by such employer for services rendered to him during the quarter beginning April 1, 1999, shall be at the rate of 27 cents.

In accordance with directions in Section 15(a) of the Railroad Retirement Act of 1974, the Railroad Retirement Board has determined that for the quarter beginning April 1, 1999, 36.9 percent of the taxes collected under Sections 3211(b) and 3221(c) of the Railroad Retirement Tax Act shall be credited to the Railroad Retirement Account and 63.1 percent of the taxes collected under such Sections 3211(b) and 3221(c) plus 100 percent of the taxes collected under Section 3221(d) of the Railroad Retirement Tax Act shall be credited to the Railroad Retirement Supplemental Account.

By Authority of the Board.

Dated: February 26, 1999.

Beatrice Ezerski,

Secretary of the Board.

[FR Doc. 99–5451 Filed 3–4–99; 8:45 am]

BILLING CODE 7905–01–M

SECURITIES AND EXCHANGE COMMISSION

[Release No. 35–26981]

Filings Under the Public Utility Holding Company Act of 1935, as Amended (''Act'')

February 26, 1999.

Notice is hereby given that the following filing(s) has/have been made

with the Commission pursuant to provisions of the Act and rules promulgated under the Act. All interested persons are referred to the applications(s) and/or declaration(s) for complete statements of the proposed transaction(s) summarized below. The application(s) and/or declaration(s) and any amendments is/are available for public inspection through the Commission's Office of Public Reference.

Interested persons wishing to comment or request a hearing on the application(s) and/or declaration(s) should submit their views in writing by March 20, 1999, to the Secretary, Securities and Exchange Commission, Washington, DC 20549, and serve a copy on the relevant applicant(s) and/or declarants(s) at the address(es) specified below. Proof of service (by affidavit or, in case of an attorney at law, by certificate) should be filed with the request. Any request for hearing should identify specifically the issues of fact or law that are disputed. a person who so requests will be notified of any hearing, if ordered, and will receive a copy of any notice or order issued in the matter. After March 20, 1999, the application(s) and/or declaration(s), as filed or as amended, may be granted and/or permitted to become effective.

Cinergy Corp. (70–9445)

Cinergy Corp. (''Cinergy''), 139 East Fourth Street, Cincinnati, Ohio 45202, a registered holding company, has filed a declaration under sections 6(a) and 7 of the Act and rule 54 under the Act.

On December 12, 1999, Cinergy's board of directors adopted the Cinergy Corp. Sharesave Scheme, an employee savings plan (''Plan''), for employees of Cinergy Global Power Services Ltd. (''CGPS''), an indirect wholly owned subsidiary of Cinergy organized under the laws of the United Kingdom. Adoption of the Plan does not require shareholder approval. Cinergy proposes to issue and sell under the Plan up to 75,000 shares of Cinergy common stock (''Common Stock'') to employees of CGPS through December 31, 2004.

An employee may participate in the Plan by entering into a savings contract (''Savings Contract'') under which he or she would make monthly contributions into a savings account (''Savings Account'') for either a three or five year period (''Savings Period''). Each employee participating in the Plan would be granted a right, which may be exercised at the end of the Savings Period, to acquire shares of Common Stock using the funds accumulated in his or her Savings Account. The price at which the shares may be acquired by the employee would be set at a discount of up to twenty percent off the average high and low sales price for the Common Stock on a predetermined date preceding the execution by the employee of the Savings Contract.

Participants are not required to exercise their right to acquire shares of Common Stock. If the Option Price is higher than the market value of the Common Stock on the Option maturity date, participants may withdraw the amounts accrued in their respective Savings Accounts to that date.

A three-person committee, initially made up of two CGPS officers and one Cinergy officer, will administer the Plan, which will have a ten year duration. Cinergy intends to use authorized, unissued, as well as, previously issued shares of Common Stock acquired by Cinergy to provide the shares acquired through the Plan.

Cinergy proposes to use proceeds from sales of Common Stock under the Plan for general corporate purposes.

For the Commission by the Division of Investment Management, under delegated authority.

Jonathan G. Katz,

Secretary.

[FR Doc. 99–5465 Filed 3–4–99; 8:45 am]

BILLING CODE 8010–01–M

SECURITIES AND EXCHANGE COMMISSION

[Investment Company Act Release No. 23722; 812–11470]

The Victory Portfolios, et al.; Notice of Application

February 26, 1999.

AGENCY: Securities and Exchange Commission (''Commission'').

ACTION: Notice of an application under section 17(b) of the Investment Company Act of 1940 (the ''Act'') for an exemption from section 17(a) of the Act.

SUMMARY OF THE APPLICATION: Applicants request an order to permit the Victory Special Growth Fund, a series of The Victory Portfolios, to acquire all of the assets and liabilities of the Gradison Opportunity Growth Trust, a series of Gradison Growth Trust. Because of certain affiliations, applicants may not rely on rule 17a–8 under the Act.

APPLICANTS: The Victory Portfolios (''Victory''), Gradison Growth Trust (''Gradison''), and Key Asset Management Inc. (''Adviser'').

FILING DATES: The application was filed on January 13, 1999. Applicants have agreed to file an amendment to the application during the notice period, the substance of which is reflected in this notice.

HEARING OR NOTIFICATION OF HEARING: An order granting the application will be issued unless the Commission orders a hearing. Interested persons may request a hearing by writing to the Commission's Secretary and serving applicants with a copy of the request, personally or by mail. Hearing requests should be received by the Commission by 5:30 p.m. on March 22, 1999, and should be accompanied by proof of service on applicants in the form of an affidavit or, for lawyers, a certificate of service. Hearing requests should state the nature of the writer's interest, the reason for the request, and the issues contested. Persons who wish to be notified of a hearing may request notification by writing to the Commission's Secretary.

ADDRESSES: Secretary, Commission, 450 Fifth Street, NW, Washington, DC 20549. Applicants, c/o S. Elliot Cohan, Esq., Kramer Levin Naftalis & Frankel LLP, 919 Third Avenue, New York, New York 10022–3852.

FOR FURTHER INFORMATION CONTACT: Emerson S. Davis, Sr., Senior Counsel, at (202) 942–0714, or George J. Zornada, Branch Chief, at (202) 942–0564 (Division of Investment Management, Office of Investment Company Regulation).

SUPPLEMENTARY INFORMATION: The following is a summary of the application. The complete application may be obtained for a fee from the Commission's Public Reference Branch, 450 Fifth Street, NW, Washington, DC 20549 (telephone (202) 942–8090).

Applicants' Representations

1. Victory, a Delaware business trust, is registered under the Act as an open-end management investment company and is currently comprised of thirty series, including the Victory Special Growth Fund (the ''Acquiring Fund''). Gradison, an Ohio business trust, is registered under the Act as an open-end management investment company. Gradison Opportunity Value Fund (the ''Acquired Fund'') is a series of Gradison.

2. The Adviser, a New York corporation, is registered under the Investment Advisers Act of 1940 (''Advisers Act'') and is the investment adviser to the Acquiring Fund. At the time of the Reorganization, as defined below, the Adviser will be a bank holding company subsidiary of KeyCorp, a financial services holding company. McDonald Investments, Inc. (''McDonald'') is registered under the

Advisers Act and is the investment adviser to the Acquired Fund. McDonald's parent corporation has merged with Key Corp and McDonald plans to combine its advisory services with the Adviser. A pooled investment vehicle managed by a division of the Adviser for the benefit of KeyCorp employees (the ''Cash Balance Fund'') owns 42.6% of the Acquiring Fund.

3. On November 6, 1998, and December 11, 1998, the boards of trustees of Victory and Gradison (together, the ''Boards''), including a majority of the trustees who are not ''interested persons,'' as defined in section 2(a)(19) of the Act (''Independent Trustees''), respectively, approved an Agreement and Plan Reorganization and Termination (''Plan''). Under the Plan, on the date of the exchange (the ''Closing Date''), which is currently anticipated to be March 25, 1999, the Acquiring Fund will acquire all of the assets and liabilities of the Acquired Fund in exchange for Class G shares of the Acquiring Fund that have an aggregate net asset value (''NAV'') equal to the aggregate NAV of the Acquired Fund as of the close of business on the business day preceding the Closing Date. On the Closing Date, or as soon as practical thereafter, the Acquired Fund will liquidate and distribute *pro rata* the Class G shares of the Acquiring Fund to the shareholders of the Acquired Fund (the ''Reorganization''). The value of the assets of the Funds will be determined in the manner set forth in the Funds' then-current prospectuses and statements of additional information.

4. Applicants state that the investment objectives, policies, and limitations of the Acquiring Fund are similar to those of the Acquired Fund. Class G shares of the acquiring Fund are not subject to any sales charge or redemption fee, but do pay and asset-based sales charge that is the same as the asset-base sales charge imposed on shares of the Acquired Fund. For a period of at least two years following the Reorganization, the Adviser has agreed to waive or reimburse expenses so that the total fund operating expenses of the Acquiring Fund would not exceed the total fund operating expenses of the Acquired Fund. Shareholders of the Acquired Fund will not incur any sales charges in connection with the Reorganization. Legal and audit expenses of the Reorganization will be borne by Victory and expenses related to the registration of shares will be borne by the Acquiring Fund's distributor, BISYS Fund Services, Inc.

5. The Boards, including all of the Independent Trustees, determined that the Reorganization is in the best interests of the shareholders of the Acquired Fund and the Acquiring Fund, and that the interests of the existing shareholders of the Acquired Fund and Acquiring Fund would not be diluted by the Reorganization. In assessing the Reorganization, the Boards considered various factors, including: (a) The investment objectives, policies and limitations of the Acquired and Acquiring Funds; (b) the terms and conditions of the Reorganization; (c) the tax free-nature of the Reorganization; (d) the expense ratios of the Acquiring and Acquired Funds; and (e) alternative options to the Reorganization.

6. The Reorganization is subject to a number of conditions precedent, including that: (a) The shareholders of the Acquired Fund approve the Plan; (b) the Acquiring and Acquired Funds receive opinions of counsel that the Reorganization will be tax-free for the Funds; and (c) applicants receive from the Commission an exemption from section 17(a) of the Act for the Reorganization. The Plan may be terminated and the Reorganization abandoned by mutual consent of the Boards or by either party in case of a breach of the Plan. Applicants agree not to make any material changes to the Plan without prior Commission approval.

7. Definitive proxy solicitation materials have been filed with the Commission and were mailed to shareholders of the Acquired Fund on January 31, 1999. A special meeting of shareholders is scheduled for March 5, 1999.

Applicants' Legal Analysis

1. Section 17(a) of the Act generally prohibits an affiliated person of a registered investment company, or an affiliated person of such a person, acting as principal, from selling any security to, or purchasing any security from, the company. Section 2(a)(3) of the Act defines an ''affiliated person'' of another person to include (a) any person directly or indirectly owning, controlling, or holding with power to vote 5% or more of the outstanding voting securities of the other person; (b) any person 5% or more of whose securities are directly or indirectly owned, controlled, or held with power to vote by the other person; (c) any person directly or indirectly controlling, controlled by or under common control with the other person; and (d) if the other person is an investment company, any investment adviser of that company.

2. Rule 17a–8 under the Act exempts from the prohibitions of section 17(a) mergers, consolidations, or purchases or sales of substantially all of the assets of registered investment companies that are affiliated persons, or affiliated persons of an affiliated person, solely by reason of having a common investment adviser, common directors, and/or common officers, provided that certain conditions set forth in the rule are satisfied.

3. Applicants believe that they may not rely on rule 17a–8 in connection with the Reorganization because the Funds may be deemed to be affiliated by reasons other than having a common investment adviser, common directors, and/or common officers. Applicants state that KeyCorp may be deemed to have an indirect pecuniary interest in the assets held by the Cash Balance Fund. Applicants further state that because the Cash Balance Fund owns 42.6% of the Acquiring Fund, the Acquiring Fund may be deemed an affiliated person of an affiliated person of the Acquired Fund for a reason other than having a common investment adviser, common directors and/or common officers.

4. Section 17(b) of the Act provides that the Commission may exempt a transaction from the provisions of section 17(a) if the evidence establishes that the terms of the proposed transaction, including the consideration to be paid, are reasonable and fair and do not involve overreaching on the part of any person concerned, and that the proposed transaction is consistent with the policy of each registered investment company concerned and with the general purposes of the Act.

5. Applicants request an order under section 17(b) of the Act exempting them from section 17(a) to the extent necessary to consummate the Reorganization. Applicants submit that the Reorganization satisfies the standards of section 17(b) of the Act. Applicants believe that the terms of the Reorganization are fair and reasonable and do not involve overreaching. Applicants state that the Reorganization will be based on the relative NAVs of the Acquiring and Acquired Funds' shares. Applicants also state that the investment objectives, policies and restrictions of the Funds are, in material respects, substantially similar. In addition, applicants state that the Boards, including all of the Independent Trustees, have made the requisite determinations that the participation of the Acquiring and Acquired Funds in the Reorganization is in the best interests of each Fund and that such participation will not dilute the interests of shareholders of the Funds.

For the Commission, by the Division of Investment Management, under delegated authority.

Jonathan G. Katz,

Secretary.

[FR Doc. 99–5443 Filed 3–4–99; 8:45 am]

BILLING CODE 8010–01–M

SECURITIES AND EXCHANGE COMMISSION

[Release No. IC–23721]

Notice of Applications for Deregistration Under Section 8(f) of the Investment Company Act of 1940

February 26, 1999.

The following is a notice of applications for deregistration under section 8(f) of the Investment Company Act of 1940 for the month of February, 1999. A copy of each application may be obtained for a fee at the SEC's Public Reference Branch, 450 Fifth St., NW, Washington, DC 20549 (tel. 202–942–8090). An order granting each application will be issued unless the SEC orders a hearing. Interested persons may request a hearing on any application by writing to the SEC's Secretary at the address below and serving the relevant applicant with a copy of the request, personally or by mail. Hearing requests should be received by the SEC by 5:30 p.m. on March 23, 1999, and should be accompanied by proof of service on the applicant, in the form of an affidavit or, for lawyers, a certificate of service. Hearing requests should state the nature of the writer's interest, the reason for the request, and the issues contested. Persons who wish to be notified of a hearing may request notification by writing to the Secretary, SEC, 450 Fifth Street, NW, Washington, DC 20549. For Further Information Contact: Diane L. Titus, at (202) 942–0564, SEC, Division of Investment Management, Office of Investment Company Regulation, Mail Stop 5–6, 450 Fifth Street, NW, Washington, DC 20549.

Morgan Stanley Dean Witter Intermediate Term U.S. Treasury Trust [File No. 811–7249]

Summary: Applicant seeks an order declaring that it has ceased to be an investment company. On October 26, 1998, applicant made a final liquidating distribution to its securityholder s at net asset value per share. Expenses of approximately $16,000 incurred in connection with the liquidation were paid by Morgan Stanley Dean Witter Advisors Inc., applicant's investment adviser.

Filing Date: The application was filed on January 27, 1999.

Applicant's Address: Two World Trade Center, New York, New York 10048.

Concord Fund, Inc. [File No. 811–566]

Summary: Applicant seeks an order declaring that it has ceased to be an investment company. As of January 29, 1999, applicant made a liquidating distribution to 104 shareholders. On that same date applicant had 272 registered shareholder accounts that had not surrendered their shares. ChaseMellon Shareholder Services, L.L.C., applicant's disbursing agent, is holding funds representing the aggregate liquidation value of applicant's remaining shares. Expenses of approximately $67,151 incurred in connection with the liquidation were paid by applicant.

Filing Dates: The application was filed on January 20, 1999 and amended on February 5, 1999.

Applicant's Address: c/o Shapiro, Weiss & Company, 60 State Street, 38th Floor, Boston, Massachusetts 02109.

Russia and Eastern Europe Portfolio [File No. 811–8491]

Summary: Applicant seeks an order declaring that it has ceased to be an investment company. Applicant has never made a public offering of its securities, nor does it propose to make a public offering or engage in busienss of any kind.

Filing Date: The application was filed on January 28, 1999.

Applicant's Address: c/o Boston Management and Research, 24 Federal Street, Boston, Massachusetts 02110.

Taurus MuniNew York Holdings, Inc. [File No. 811–5884]

Summary: Applicant seeks an order declaring that it has ceased to be an investment company. On February 9, 1998, applicant transferred all its assets and liabilities to MuniYield New York Insured Fund II, Inc. (''MuniYield Insured II'') in exchange for shares of common stock and shares of auction market preferred stock (''AMPS'') of MuniYield Insured II. Each holder of applicant's common stock received the number of shares of MuniYield Insured II common stock with a net asset value (''NAV'') equal to the NAV of applicant's common stock held by such shareholder, and each holder of applicnat's AMPS received the number of shares of MuniYield Insured II AMPS with an aggregate liquidation preference equal to the aggregate liquidation preference of applicant's AMPS owned by such shareholder. MuniYield Insured II paid approximately $281,000 in expenses incurred in connection with the reorganization. In addition, applicant incurred approximately $4,000 in liquidation expenses.

Filing Dates: The application was filed on September 14, 1998 and amended on January 12, 1999 and February 17, 1999.

Applicant's Address: 800 Scudders Mill Road, Plainsboro, New Jersey 08536.

Taurus MuniCalifornia Holdings, Inc. [File No. 811–5882]

Summary: Applicant seeks an order declaring that it has ceased to be an investment company. On February 9, 1998, applicant transferred all of its assets and liabilities to MuniYield California Fund, Inc. (''MuniYield California'') in exchange for shares of common stock and shares of auction market preferred stock (''AMPS'') of MuniYield California. Each holder of applicant's common stock received the number of shares of MuniYield California common stock with a net asset value (''NAV'') equal to the NAV of applicant's common stock held by such shareholder, and each holder of applicant's AMPS received the number of shares of MuniYield California AMPS with an aggregate liquidation preference equal to the aggregate liquidation preference of applicant's AMPS owned by such shareholder. MuniYield California paid approximately $270,000 in expenses incurred in connection with the reorganization. In addition, applicant incurred approximately $4,000 in liquidation expenses.

Filing Dates: The application was filed on October 14, 1998 and amended on January 12, 1999 and February 17, 1999.

Applicant's Address: 800 Scudders Mill Road, Plainsboro, New Jersey 08536.

SCM Portfolio Fund [File No. 811–5630]

Summary: Applicant seeks an order declaring that it has ceased to be an investment company. By November 30, 1998, applicant had distributed substantially all of its assets to its securityholders at the net asset value per share. Expenses incurred in connection with the liquidation totaled $5,258, of which the board of directors paid approximately $4,844 and non-board securityholders paid approximately $414.

Filing Dates: The application was filed on December 24, 1998. Applicant has agreed to file an amendment during the notice period.

Applicant's Address: 119 Maple Street, P.O. Box 947, Carrollton, Georgia 30117.

Emerald Funds [File No. 811–5515]

Summary: Applicant seeks an order declaring that it has ceased to be an investment company. By May 22, 1998, each of applicant's 14 series had transferred all of their assets and liabilities to a corresponding series of either Nations Fund Trust, Nations Fund, Inc., or Nations Institutional Reserves (collectively, the ''Nations Funds Family'') in exchange for shares of the corresponding Nations Fund Family series based on net asset value. NationsBanc Advisors, Inc., investment adviser to the Nations Funds Family, paid approximately $4.2 million in expenses associated with the reorganization.

Filing Date: The application was filed on January 29, 1999. Applicant has agreed to file an amendment during the notice period.

Applicant's Address: 3435 Stelzer Road, Columbus, Ohio 43219–3035.

Evergreen Balanced Fund (formerly Keystone Balance Fund (K–1)) [File No. 811–96]

Summary: Applicant seeks an order declaring that it has ceased to be an investment company. On January 24, 1998, applicant transferred its assets and liabilities to Evergreen Balanced Fund, a series of Evergreen Equity Trust, in exchange for shares of the acquiring fund based on the relative net asset values. First Union National Bank, the parent of applicant's investment adviser, paid all the expenses incurred in connection with the reorganization.

Filing Date: The application was filed on January 12, 1999.

Applicant's Address: 200 Berkeley Street, Boston, Massachusetts 02116.

For the Commission, by the Division of Investment Management, pursuant to delegated authority.

Jonathan G. Katz,

Secretary.

[FR Doc. 99–5442 Filed 3–4–99; 8:45 am]

BILLING CODE 8010–01–M

DEPARTMENT OF STATE

[Public Notice #2989]

Advisory Committee on Labor Diplomacy; Notice of Establishment

The Department of State is establishing the Advisory Committee on Labor Diplomacy to serve the Secretary of State in an advisory capacity with respect to the U.S. Government's labor diplomacy programs administered by the Department of State. The Committee will advise on the resources and policies needed to implement labor diplomacy programs efficiently, effectively, and in a manner that ensures U.S. leadership before the international community in promoting the objectives and ideals of U.S. labor policies now and in the 21st century. The Advisory Committee will also provide advice on policies and programs to strengthen the Department's ability to respond to the many challenges facing the United States and the federal government in international labor matters. The Under Secretary for Management has determined that the Committee is necessary and in the public interest.

Members of the Committee will be appointed by the Secretary of State. The Committee will follow the procedures prescribed by the Federal Advisory Committee Act (FACA).

Meetings will be open to the public unless a determination is made with accordance with Section 10 of the FACA that a meeting or a portion of the meeting should be closed to the public.

Notice of each Committee meeting will be provided in the **Federal Register** at least 15 days prior to the meeting date. For further information, contact Al Perez, Executive Secretary of the Committee at (202) 647–4327.

Dated: March 2, 1999.

Leslie Gerson,

Acting Assistant Secretary, Bureau of Democracy, Human Rights and Labor U.S. Department of State.

[FR Doc. 99–5496 Filed 3–4–99; 8:45 am]

BILLING CODE 4710–18–P

DEPARTMENT OF TRANSPORTATION

Office of the Secretary

Reports, Forms and Recordkeeping Requirements Agency Information Collection Activity Under OMB Review

AGENCY: Department of Transportation (DOT).

ACTION: Notice.

SUMMARY: In accordance with the Paperwork Reduction Act of 1995 (44 U.S.C. Chapter 35, as amended) this notice announces that the information collection request described below has been forwarded to the Office of Management and Budget (OMB) for review. The Department is requesting an emergency clearance by March 8, 1999, in accordance with 5 CFR 1320.13. The following information describes the nature of the information collection and its expected burden.

FOR FURTHER INFORMATION CONTACT: Ms. Vanester M. Williams, Office of the Secretary, Office of the Chief Information Officer, Department of Transportation, 400 7th Street, SW., Washington, DC 20590, (202) 366–1771.

SUPPLEMENTARY INFORMATION:

Office of the Secretary

Title: Customer Survey—Program Evaluation of FAA Airman Certification and/or Rating Application.

OMB Control Number: 2105–NEW.

Type of Request: Emergency request for a one-time collection of information.

Affected Entities: A percentage of persons from the following groups: FAA personnel, airmen, academics and industry.

Abstract: The Federal Aviation Administration (FAA) recently reengineered the Airmen Certification and/or Rating Application (ACRA) process. This effort was undertaken as a means of streamlining the time and effort involved for people. In the Department's continuing endeavors to improve the way we do business and to provide more efficient and cost effective services to our constituents, we will conduct a process program evaluation to determine the extent to which the FAA Airmen Certification and/or ACRA system has reduced paperwork burden, enhanced customer satisfaction, and/or improved productivity/efficiency. Hopefully, this survey will allow us to determine if the findings could have applicability to other departmental information collections. This program evaluation was mentioned in both the Department's Fiscal Year 1999 Performance Plan and its Paperwork Reduction Strategic Plan submitted to the Office of Management and Budget in December, 98.

Average Annual Burden per Respondents: 10–15 minutes.

Estimated Total Annual Burden: 15 hours.

Issued in Washington, DC, on March 1, 1999.

Vanester M. Williams,

Clearance Officer, United States Department of Transportation.

[FR Doc. 99–5461 Filed 3–4–99; 8:45 am]

BILLING CODE 4910–62–P

DEPARTMENT OF TRANSPORTATION

Coast Guard

[CGD09–00–004]

Great Lakes Regional Waterways Management Forum Meeting

AGENCY: Coast Guard, DOT.

ACTION: Notice of meeting.

SUMMARY: The Great Lakes regional waterways management forum will hold its initial meeting to discuss various waterways management issues. Agenda items will include United States and Canadian regional Great Lakes waterways concerns as they relate to commercial shipping, economics, labor, the environment and recreational boating. The purpose of the meeting will be to select Great Lakes regional waterways management areas to improve during 1999. The meeting will be open to the public.

DATES: The meeting will be held March 12, 1999 from 1:00 p.m. to 4:00 p.m..

COMMENTS: Comments or written material must be received on or before March 11, 1999 to be considered during the meeting. Comments received after this date may be considered at a later time. Any written comments and materials received may be reviewed by the public at Commander(map), Ninth Coast Guard District, 1240 E. 9th Street, Room 2069, Cleveland, OH 44199.

ADDRESSES: The meeting will be held in the B–1 conference room (Cafeteria level) at the Celebreeze Federal Office Building, 1240 E. 9th Street, Cleveland, OH 44199. Persons with disabilities requiring assistance to attend this meeting should contact LCDR Patrick Gerrity at (216) 902–6049. Comments should be submitted to Commander(map), Ninth Coast Guard District, 1240 E. 9th Street, Cleveland, OH 44199.

FOR FURTHER INFORMATION CONTACT: LCDR Patrick Gerrity (map), Ninth Coast Guard District, 1240 E. 9th Street, Room 2069, Cleveland, OH 44199, telephone (216) 902–6049 or visit the Ninth Coast Guard District's Waterways Management website at http://www.uscg.mil/d9/wwm.

Dated: March 1, 1999.

G. S. Cope,

Captain, U.S. Coast Guard, Acting Commander, Ninth Coast Guard District.

[FR Doc. 99–5508 Filed 3–4–99; 8:45 am]

BILLING CODE 4910–15–M

DEPARTMENT OF TRANSPORTATION

Federal Aviation Administration

Aviation Rulemaking Advisory Committee Meeting on Noise Certification Issues

AGENCY: Federal Aviation Administration (FAA), DOT.

ACTION: Notice of meeting.

SUMMARY: The FAA is issuing this notice to advise the public of a meeting of the Federal Aviation Administration Aviation Rulemaking Advisory Committee to discuss noise certification issues.

DATES: The meeting will be held on March 24 at 10:00 a.m.

ADDRESSES: The meeting will be held at the General Aviation Manufacturers Association, 1400 K Street NW, Washington, DC.

FOR FURTHER INFORMATION CONTACT: Ms. Angela O. Anderson, (202) 267–9681, Office of Rulemaking (ARM–200), 800 Independence Avenue, SW, Washington, DC 20591.

SUPPLEMENTARY INFORMATION: Pursuant to section 10(a)(2) of the Federal Advisory Committee Act (Pub. L. 92–463; 5 U.S.C. App. II), notice is hereby given of a meeting of the Aviation Rulemaking Advisory Committee (ARAC) to discuss noise certification issues. This meeting will be held March 24, 1999, at 10:00 a.m., at the General Aviation Manufacturers Association. The agenda for this meeting will include progress reports from the FAR/JAR Harmonization Working Group for Propeller-Driven Small Airplanes and the FAR/JAR Harmonization Working Group for Subsonic Transport Airplanes. It will also include the presentation and vote on the NPRM from the FAR/JAR Harmonization Working Group for Helicopters. Members of the public may obtain copies of this NPRM by contacting the person listed above under **FOR FURTHER INFORMATION CONTACT**.

Attendance is open to the interested public but may be limited to the space available. The public must make arrangements in advance to present oral statements at the meeting or may present statements to the committee at any time. In addition, sign and oral interpretation can be made available at the meeting, as well as an assistive listening device, if requested 10 calendar days before the meeting. Arrangements may be made by contacting the person listed under the heading **FOR FURTHER INFORMATION CONTACT**.

Issued in Washington, DC, on March 1, 1999.

Paul Dykeman,

Assistant Executive Director for Noise Certification Issues, Aviation Rulemaking Advisory Committee.

[FR Doc. 99–5468 Filed 3–4–99; 8:45 am]

BILLING CODE 4910–13–M

DEPARTMENT OF TRANSPORTATION

Federal Aviation Administration

Notice of Intent To Rule on Application To Impose and Use the Revenue From a Passenger Facility Charge (PFC) at Worcester Regional Airport, Worcester, MA

AGENCY: Federal Aviation Administration (FAA), DOT.

ACTION: Notice of Intent To Rule on Application.

SUMMARY: The FAA proposes to rule and invites public comment on the application to impose and use the revenue from a PFC at Worcester Regional Airport under the provisions of the Aviation Safety and Capacity Expansion Act of 1990 (Title IX of the Omnibus Budget Reconciliation Act of 1990) (Public Law 101–508) and part 158 of the Federal Aviation Regulations (14 CFR Part 158).

DATES: Comments must be received on or before April 5, 1999.

ADDRESSES: Comments on this application may be mailed or delivered in triplicate to the FAA at the following address: Federal Aviation Administration, Airports Division, 12 New England Executive Park, Burlington, Massachusetts 01803.

In addition, one copy of any comments submitted to the FAA must be mailed or delivered to Mr. Eric Waldron, Airport Director for Worcester Regional Airport at the following address: Worcester Regional Airport, 375 Airport Drive, Worcester, Massachusetts 01602.

Air carriers and foreign air carriers may submit copies of written comments previously provided to the City of Worcester under section 158.23 of part 158.

FOR FURTHER INFORMATION CONTACT: Priscilla A. Scott, PFC Program Manager, Federal Aviation Administration, Airports Division, 12 New England Executive Park, Burlington, Massachusetts 01803, (781) 238–7614. The application may be reviewed in person at 16 New England Executive Park, Burlington, Massachusetts.

SUPPLEMENTARY INFORMATION: The FAA proposes to rule and invites public comment on the application to impose and use the revenue from a PFC at Worcester Regional Airport under the provisions of the Aviation Safety and Capacity Expansion Act of 1990 (Title IX of the Omnibus Budget Reconciliation Act of 1990) (Public Law 101–508) and part 158 of the Federal Aviation Regulations (14 CFR Part 158).

On February 22, 1999, the FAA determined that the application to impose and use the revenue from a PFC submitted by the City of Worcester was substantially complete within the requirements of section 158.25 of part 158. The FAA will approve or disapprove the application, in whole or in part, no later than May 31, 1999.

The following is a brief overview of the application.

PFC Project #: 99–03–C–00–ORH.

Level of the proposed PFC: $3.00.

Proposed charge effective date: September 1, 1999.

Proposed charge expiration date: December 1, 2006.

Total estimated net PFC revenue: $1,190,443.

Brief description of proposed projects: Construct New Terminal Facilities and Related Landside/Airside Improvements.

Class or classes of air carriers which the public agency has requested not be required to collect PFCs: The City of Worcester has not requested any exclusions.

Any person may inspect the application in person at the FAA office listed above under **FOR FURTHER INFORMATION CONTACT**.

In addition, any person may, upon request, inspect the application, notice and other documents germane to the application in person at the Worcester Regional Airport, 375 Airport Drive, Worcester, Massachusetts 01602.

Issued in Burlington, Massachusetts on February 23, 1999.

Bradley A. Davis,

Assistant Manager, Airports Division, New England Region.

[FR Doc. 99–5469 Filed 3–4–99; 8:45 am]

BILLING CODE 4910–13–M

DEPARTMENT OF TRANSPORTATION

Federal Highway Administration

Outdoor Advertising Council

AGENCY: Federal Highway Administration (FHWA), DOT.

ACTION: Notice of amended agreement.

SUMMARY: The Federal Highway Administration agrees with the Nevada Department of Transportation (NVDOT) that one of the definitions in the Highway Beautification Federal/State Agreement between the United States of America and the State of Nevada should be amended by deleting ''incorporated villages and cities'' and substituting ''urbanized area boundaries, as defined by 23 U.S.C. 101(a).''

DATES: The amended agreement is effective as of March 5, 1999.

FOR FURTHER INFORMATION CONTACT: Ms. Marsha Bayer, Office of Real Estate Services, HRE–20, (202) 366–5853; or Mr. Robert Black, Office of Chief Counsel, HCC–31, (202) 366–1359, Federal Highway Administration, 400 Seventh Street, SW, Washington, DC 20590. Office hours are from 7:45 a.m. to 4:15 p.m., E.T., Monday through Friday, except Federal holidays.

SUPPLEMENTARY INFORMATION: The Highway Beautification Act of 1965 (HBA), as amended, codified at 23 U.S.C. 131 requires States to provide effective control of outdoor advertising in the areas adjacent to both the Interstate System and Federal-aid primary system, as it existed on June 1, 1991, and any highway which is not on either of those systems but which is on the National Highway System. States must provide effective control of outdoor advertising as a condition of receiving their full apportionment of Federal-aid highway funds. Effective control of outdoor advertising includes prohibiting the erection of new advertising signs except for certain categories of signs listed at 23 U.S.C. 131(c).

Another category of signs, ''off premise'' signs, may be allowed by a State under 23 U.S.C. 131(d) in zoned or unzoned commercial or industrial areas. Signs in such areas must conform to the requirements of an agreement between the State and the Federal Government which establishes size, lighting, and spacing criteria consistent with customary use. The agreement between Nevada and the FHWA was executed January 21, 1972.

Modifying such agreements is rarely done, but in April 1980, the FHWA adopted a procedure to be followed if a State requested a change in the Federal/State agreement. In accordance with this procedure, the State of Nevada first submitted its proposed change, along with the reasons for the change and the effects of the change, to the FHWA Division Office in Nevada. The FHWA Nevada Division, Region 9, and Headquarters offices reviewed and commented on the proposal.

The change in the agreement is aimed primarily at effective control of billboards in Clark County (Las Vegas), Nevada, where a vast part of the urbanized area is outside the incorporated city limits of Las Vegas. The amendment requires the effective control of outdoor advertising signs as described in section 131(c) in urban areas outside of incorporated villages and cities. Las Vegas is reportedly the fastest growing urban area in the United States. The State of Nevada believes that the change to the term ''urbanized area boundaries'' in the agreement could allow between 20 and 24 new billboard sites primarily in the Las Vegas urbanized area but would still prohibit the erection of signs in incorporated cities, towns, or villages outside of urbanized areas as required by section 131(c). The State maintains that the amendment would result in minimal aesthetic impact because urban areas are generally intensely developed and contain numerous on-premise signs.

The State held public hearings on the proposed change to receive comments from the public. No negative comments were received during the State's public hearings on this proposed change, and several supportive comments were presented. Nevada's formal request to the FHWA also provided justification for the proposed revision to the 1972 Federal/State Agreement. The FHWA concurred with the State that the amendment resulted in minimal aesthetic impact because urban areas are generally developed and contain numerous on-premise signs; that the amendment clarified the distinction between developed areas and town limits; that the resulting changes did not compromise highway safety; that the amendment eliminated the artificial and arbitrary imposition of standards which allow billboards to be erected in areas where they are not appropriate, and in other cases prohibit billboards from areas where they would be appropriate; and that the amendment maintained interchange block-out zones outside the limits of urban boundaries.

The State submitted the justifications for the change, the record of its public hearings, and an assessment of the impact to the FHWA. These were summarized and published in a **Federal Register** notice dated November 28, 1997.

Five respondents sent comments to the FHWA Docket No. FHWA–97–2907. One was a national scenic preservation organization and four were various state scenic preservation organizations. No comments were received from Nevada citizens or organizations. All five commenters criticized the proposed amendment as not advancing the goals of the HBA or any other public policy. The five commenters believe that the amendment would set a national precedent. The national organization maintained that the amendment would undermine Las Vegas' ongoing efforts to control billboard blight and flew in the face of local public opinion to control billboards in Las Vegas. Another organization commented that any further potential loopholes could open the door for more billboard blight. A

third organization commented that the amendment would increase the number of distractions to drivers at intersections while a fourth organization asserted that the amendment would add severe insult to injury. The last organization responded that the amendment would further encourage efforts being made by outdoor advertisers to weaken pending billboard control legislation.

The comments on the proposed amended agreement were evaluated by the FHWA. Outdoor advertising per se is not prohibited by the HBA. Section 131(d), which mandates agreements between the FHWA and the States, holds that effective control of outdoor advertising is thus not a total ban of advertising. Rather, it is the relegation of outdoor advertising signs to their proper areas. The urbanized area of Las Vegas would seem to be such an area.

It must be emphasized that nothing in the HBA or the Agreement prohibits Nevada or Las Vegas from imposing stricter controls on advertising. The HBA and the Agreement set the minimum amount of control a state must impose, not the maximum. Further, the amendment does not necessarily detract from Las Vegas' efforts to control outdoor advertising signs. The amendment would prohibit the erection of signs in incorporated cities, towns, or villages which are outside urbanized area boundaries. In incorporated villages and cities (such as Las Vegas) within urbanized areas, the erection of signs is already controlled by the existing Federal/State Agreement. The amendment to the agreement would exchange the restrictions on size, lighting, and spacing (while establishing block-out zones) within urbanized areas outside of incorporated villages and cities, for such restrictions within incorporated villages and cities outside of urbanized areas.

Any precedent set by the amendment to this agreement would be limited and nonbinding. The Las Vegas metropolitan area is unique, so the FHWA does not believe that any other Federal/State agreement would require amendment for the same reasons.

The FHWA believes that traffic safety within the Las Vegas urbanized area is not compromised by the amended language. Certainly, the State of Nevada, which is legally responsible for the safety of its highways, would not have proposed the amendment if it would lead to an increase in accidents. The amendment would extend block-out zones to the boundaries of unincorporated urbanized areas.

The comment that the amendment to the agreement would degrade the appearance of the area is inconsistent with the State's claim that the amendment would result in minimal aesthetic impact because urban areas are generally developed and contain numerous on-premise signs. Especially in the Las Vegas urbanized area, which is far beyond the municipal boundary, the potential addition of 20 to 24 sign sites among the numerous on-premise signs is insignificant. Further, the amendment would have no effect on areas within the boundaries of incorporated villages and cities, such as Las Vegas.

Nevada and the FHWA have completed the above procedure up to the point of publishing the FHWA's decision in the **Federal Register**. The State has submitted an amended agreement, signed by its duly empowered officials, to the FHWA for execution. Since the FHWA has decided the agreement should be amended as proposed, it is now publishing its decision in this **Federal Register**, and has executed on this date the amended agreement provided by the State.

Amendment to the Federal/State Agreement

The Federal/State Agreement ''For Carrying Out the National Policy Relative to Control of Outdoor Advertising in Areas Adjacent to the National System of Interstate and Defense Highways and the Federal-Aid Primary System'' made and entered on January 21, 1972, between the United States of America represented by the Secretary of Transportation acting by and through the Federal Highway Administrator and the State of Nevada has been amended to read at *Section III: STATE CONTROL*, Paragraph 2. b. *Spacing of Signs* as follows:

''Outside of urbanized area boundaries, as defined by 23 U.S.C. 101(a), no structure may be located adjacent to or within 500 feet of an interchange, intersection at grade, or safety rest area. Said 500 feet to be measured along the Interstate or freeway from the beginning or ending of pavement widening at the exit from or entrance to the main-traveled way.''

Authority: 23 U.S.C. 315; 49 CFR 1.48., 23 U.S.C. 131.

Issued on: February 25, 1999.

Kenneth R. Wykle,

Federal Highway Administrator.

[FR Doc. 99–5448 Filed 3–4–99; 8:45 am]

BILLING CODE 4910–22–P

DEPARTMENT OF TRANSPORTATION

Federal Highway Administration

[FHWA Docket No. FHWA–1997–2301; 97–10]

Highway Performance Monitoring System—Strategic Reassessment; Final Report

AGENCY: Federal Highway Administration (FHWA), DOT.

ACTION: Notice and closing of docket.

SUMMARY: FHWA has completed its strategic reassessment of the Highway Performance Monitoring System (HPMS). The work has been carried out over the past two years with the assistance of HPMS stakeholders, partners, customers and our HPMS Steering Committee. The participation of many individuals and organizations in response to our outreach process has provided valued perspectives to the reassessment process. The ''Highway Performance Monitoring System (HPMS) Reassessment Final Report'' and a companion informational brochure, ''Re-engineering HPMS,'' have been issued.

DATES: The docket is closed as of March 5, 1999.

FOR FURTHER INFORMATION CONTACT: Mr. James Getzewich, Highway Systems Performance Division, Office of Highway Information, (202) 366–0175, Federal Highway Administration, 400 Seventh Street, SW., Washington, DC 20590. Office hours are from 7:30 a.m. to 4 p.m., e.t., Monday through Friday, except Federal holidays.

SUPPLEMENTARY INFORMATION:

Electronic Access

Internet users can access all comments received by the U.S. DOT Dockets, Room PL–401, by using the universal resource locator (URL): http://dms.dot.gov. It is available 24 hours each day, 365 days each year. Please follow the instructions online for more information and help.

An electronic copy of this document may be downloaded using a modem and suitable communications software from the Government Printing Office's Electronic Bulletin Board Service at (202) 512–1661. The FHWA report and brochure are available through the Internet at http://www.fhwa.dot.gov/ohim under the heading ''Products and Publications.'' A very limited number of copies are available by writing or faxing your request to Federal Highway Administration (HPM–20), 400 Seventh Street, SW., Washington, DC 20590; fax: (202) 366–7742.

On December 23, 1996, the FHWA published a notice (61 FR 67590) requesting comments on issues related to a strategic reassessment of the Highway Performance Monitoring System (HPMS). The HPMS was developed in 1978 as a national highway transportation system data base. A major purpose of the HPMS has been to provide data that reflects the extent, condition, performance, use, and operating characteristics of the Nation's highways.

In 1988, the HPMS was enhanced with the addition of more detailed pavement data. In 1993, the HPMS was again revised to meet needs brought about by changes in the FHWA analysis and simulation models, including the shift to a geographic information system (GIS) environment; the effects of the 1990 Census; the Intermodal Transportation Efficiency Act of 1991 (ISTEA), Pub. L. 102–240, 105 Stat. 1914; the Clean Air Act Amendments of 1990, Pub. L. 101–549, 104 Stat. 2399; and the Environmental Protection Agency (EPA) requirements concerning vehicle miles of travel (VMT) tracking data in air quality non-attainment areas.

The final report documents the results of FHWA's review of the HPMS. The purpose of this review was to assist FHWA in determining an appropriate future form and direction for this major FHWA data system as we move into the 21st Century. This report represents the culmination of several serial activities including:

—The identification and assessment of the impacts of the HPMS on FHWA, its State and other governmental partners, and the many and varied HPMS customers;

—The results of an extensive outreach program that included a national HPMS workshop held in June 1997; and

—The subsequent assimilation of inputs from these activities into a revised HPMS.

As a result of the reassessment, the FHWA will change the HPMS. Over 15 percent of the data items will be eliminated and another 15 percent will be changed to significantly reduce the number of detail lines. The HPMS sample size reductions are proposed and the summary of crash data by functional system is being eliminated. The FHWA will provide States with PC-based data submittal software and will develop Internet access to the HPMS data. Overall, the changes will reduce the burden for data providers while still meeting the stated HPMS goals and objectives, FHWA's future business needs, and our partners' and customers' information needs.

Authority: 23 U.S.C. 315; 49 CFR 1.48.

Issued on February 24, 1999.

Kenneth R. Wykle,

Federal Highway Administrator.

[FR Doc. 99–5447 Filed 3–4–99; 8:45 am]

BILLING CODE 4910–22–P

DEPARTMENT OF TRANSPORTATION

National Highway Traffic Safety Administration

[Docket No. NHTSA–98–3355; Notice 3]

Red River Manufacturing, Inc.; Application for Renewal of Temporary Exemption From Federal Motor Vehicle Safety Standard No. 224

We are asking for comments on the application by Red River Manufacturing, Inc., of West Fargo, North Dakota, for a three-year renewal of NHTSA Temporary Exemption No. 98–3 from Motor Vehicle Safety Standard No. 224 *Rear Impact Protection*. Red River has applied again on the basis that ''compliance would cause substantial economic hardship to a manufacturer that has tried in good faith to comply with the standard.'' 49 CFR 555.6(a).

We are publishing this notice of receipt of the application in accordance with our regulations on temporary exemptions. This action does not represent any judgment by us about the merits of the application. The discussion that follows is based on information contained in Red River's application.

Why Red River Needs To Renew Its Temporary Exemption

On April 1, 1998, we granted Red River a temporary exemption of one year from Standard No. 224. See 63 FR 15909 for our decision.

Among other kinds of trailers, Red River manufactures and sells two types of horizontal discharge trailers which discharge their contents into hoppers, rather than on the ground. This makes it impractical to comply with Standard No. 224 by using a fixed rear impact guard. One type of horizontal discharge trailer is used in the road construction industry to deliver asphalt and other road building materials to the construction site. The other type is used to haul feed, seed, and agricultural products such as sugar beets and potatoes, from the fields to hoppers for storage or processing. Both types are known by the name ''Live Bottom.''

Standard No. 224 requires, effective January 26, 1998, that all trailers with a GVWR of 4536 Kg or more, including Live Bottom trailers, be fitted with a rear impact guard that conforms to Standard No. 223 *Rear impact guards*. Red River, which manufactured 225 Live Bottom trailers of all kinds in the 12 months preceding the filing of its application on December 22, 1998, has asked for a renewal of its exemption until April 1, 2002, in order to continue its efforts to develop a rear impact guard that conforms to Standard No. 223 and can be installed in compliance with Standard No. 224, while retaining the functionality and price-competitiveness of its trailers.

Why Compliance Would Cause Red River Substantial Economic Hardship

Live Bottoms accounted for almost half of Red River's production in 1997. In the absence of an exemption, Red River believes that approximately 60 percent of its work force would have to be laid off. Its projected loss of sales is $8,000,000 to $9,000,000 per year (net sales have averaged $14,441,822 over its 1995, 1996, and 1997 fiscal years).

We require hardship applicants to estimate the cost required to comply with a standard, as soon as possible, and at the end of a one-, two-, or three-year exemption period. Red River estimates that even a three-year exemption will require a retail price increase that will result in a loss of 35 percent of Live Bottom sales. Further, ''more than 50 percent of available engineering time would be required for compliance and related modifications in this time frame, resulting in a significant reduction in support for non-Live Bottom products, and a 5% decline in non-Live Bottom sales.''

How Red River Has Tried to Comply With the Standard in Good Faith

In its initial application for a temporary exemption, Red River explained that, in mid 1996, its design staff began exploring options for compliance with Standard No. 224. Through a business partner in Denmark, the company reviewed the European rear impact protection systems. Because these designs must be manually operated by ground personnel, Red River decided that they would not be acceptable to its American customers. Later in 1996, Red River decided to investigate powered retractable rear impact guards. The initial design could not meet the energy absorption requirements of Standard No. 223. The company then investigated the use of pneumatic-over-mechanical retractable rear impact guards, and developed a prototype design which it began testing in the field in May 1998. This testing is disclosing a number of problems as yet unresolved. In the meantime, Red River

consulted three commercial suppliers of underride devices but none produces a guard that could be used on the Live Bottoms.

Red River intends to continue its compliance efforts while an exemption is in effect, and believes that three years will enable it to conclude definitively whether it is feasible to design and manufacture a compliant rear guard that meets the requirements of its customers, and, if it is not feasible, to petition the agency for rulemaking to exclude Live Bottoms from Standard No. 224.

Red River was able to conform its other trailers with Standard No. 224

Why Exempting Red River Would Be Consistent With the Public Interest and Objectives of Motor Vehicle Safety

In its initial application, Red River argued that an exemption would be in the public interest and consistent with traffic safety objectives because the Live Bottom ''can be used safely where it would be hazardous or impractical to use end dump trailers, such as on uneven terrain or in places with low overhead clearances.'' These trailers are ''valuable to the agricultural sector'' because of the advantages they offer in the handling of relatively fragile cargo. An exemption ''would have no adverse effect on the safety of the general public'' because the Live Bottom spends very little of its operating life on the highway and the likelihood of its being involved in a rear-end collision is minimal. In addition, the design of the Live Bottom is such that the rear tires act as a buffer and reduce the likelihood of impact with the trailer.

Red River reiterates these arguments in its application for renewal of its temporary exemption. It adds that it knows of no rear end collisions involving horizontal discharge trailers that have resulted in injuries, nor any instances in which there has been an intrusion by a horizontal discharge trailer into the passenger compartment of a vehicle impacting the rear of such a trailer.

How To Comment on Red River's Application

If you would like to comment on Red River's application, send two copies of your comments, in writing, to: Docket Management, National Highway Traffic Safety Administration, Room PL–401, 400 Seventh Street, SW, Washington, DC 20590, in care of the docket and notice number shown at the top of this document.

We shall consider all comments received before the close of business on the comment closing date stated below. To the extent possible, we shall also consider comments filed after the closing date. You may examine the docket in Room PL–401, both before and after that date, between 10 a.m. and 5 p.m.

When we have reached a decision, we shall publish it in the **Federal Register**.

Comment closing date: April 5, 1999.

Authority: 49 U.S.C. 30113; delegations of authority at 49 CFR 1.50 and 501.4.

Issued: February 26, 1999.

L. Robert Shelton,

Associate Administrator for Safety Performance Standards.

[FR Doc. 99–5511 Filed 3–4–99; 8:45 am]

BILLING CODE 4910–59–P

DEPARTMENT OF THE TREASURY

Submission for OMB Review; Comment Request

February 23, 1999.

The Department of Treasury has submitted the following public information collection requirement(s) to OMB for review and clearance under the Paperwork Reduction Act of 1995, Pub. L. 104–13. Copies of the submission(s) may be obtained by calling the Treasury Bureau Clearance Officer listed. Comments regarding this information collection should be addressed to the OMB reviewer listed and to the Treasury Department Clearance Officer, Department of the Treasury, Room 2110, 1425 New York Avenue, NW., Washington, DC 20220.

DATES: Written comments should be received on or before April 5, 1999 to be assured of consideration.

Internal Revenue Service (IRS)

OMB Number: 1545–1570.

Regulation Project Number: REG–120168–97 NPRM and Temporary.

Type of Review: Extension.

Title: Preparer Due Diligence Requirements for Determining Earned Income Credit Eligibility.

Description: Income tax return preparers who satisfy the due diligence requirements in this regulation will avoid the imposition of the penalty under section 6695(g) of the Internal Revenue Code for returns or claims for refund due after December 31, 1997. The due diligence requirements include soliciting the information necessary to determine a taxpayer's eligibility for, and amount of , the Earned Income Tax Credit, and the retention of this information.

Respondents: Business or other for-profit.

Estimated Number of Respondents/Recordkeepers: 100,000.

Estimated Burden Hours Per Respondent/Recordkeeper: 5 hours, 4 minutes.

Frequency of Response: Annually.

Estimated Total Reporting/Recordkeeping Burden: 507,136 hours.

Clearance Officer: Garrick Shear, Internal Revenue Service, Room 5571, 1111 Constitution Avenue, NW, Washington, DC 20224.

OMB Reviewer: Alexander T. Hunt (202) 395–7860, Office of Management and Budget, Room 10202, New Executive Office Building, Washington, DC 20503.

Lois K. Holland,

Departmental Reports Management Officer.

[FR Doc. 99–5446 Filed 3–4–99; 8:45 am]

BILLING CODE 4830–01–P

DEPARTMENT OF VETERANS AFFAIRS

Advisory Committee on Prosthetics and Special-Disabilities Programs, Notice of Meeting

The Department of Veterans Affairs (VA) gives notice under Public Law 92–463 that a meeting of the Advisory Committee on Prosthetics and Special-Disabilities Programs (Committee) will be held Monday and Tuesday, April 26–27, 1999, at VA Headquarters, Room 930, 810 Vermont Avenue, NW, Washington, DC. The April 26 session will convene at 8 a.m. and adjourn at 4 p.m. and the April 27 session will convene at 8 a.m. and adjourn at 12 noon. The purpose of the Committee is to advise the department on its prosthetic programs designed to provide state-of-the-art prosthetics and the associated rehabilitation research, development, and evaluation of such technology. The Committee also advises the Department on special disability programs which are defined as any program administered by the Secretary to serve veterans with spinal cord injury, blindness or vision impairment, loss of or loss of use of extremities, deafness or hearing impairment, or other serious incapacities in terms of daily life functions.

On the morning of April 26, the Committee will receive a status report concerning the development of job performance standards for those individuals responsible for maintaining capacity in programs for specialized treatment and rehabilitative needs of disabled veterans. The Committee will also receive briefings by the National Program Directors of the Special-Disabilities Programs regarding the status of their activities over the last seven months. On the morning of April

27, the Committee will receive a status report concerning implementation of an integrated prosthetics organization within each Veterans Integrated Service Network. Briefings by the National Program Directors will continue and the meeting will finish with a discussion on its recommendations with input from VHA senior management (Chief Network Officer).

The meeting is open to the public. For those wishing to attend, please contact Kathy Pessagno, Veterans Health Administration (113), phone (202) 273–8512, Department of Veterans Affairs, 810 Vermont Avenue, NW, Washington, DC 20420, prior to April 21, 1999.

Dated: February 23, 1999.

Heyward Bannister,

Committee Management Officer.

[FR Doc. 99–5470 Filed 3–4–99; 8:45 am]

BILLING CODE 8320–01–M

Corrections

Federal Register

Vol. 64, No. 43

Friday, March 5, 1999

This section of the FEDERAL REGISTER contains editorial corrections of previously published Presidential, Rule, Proposed Rule, and Notice documents. These corrections are prepared by the Office of the Federal Register. Agency prepared corrections are issued as signed documents and appear in the appropriate document categories elsewhere in the issue.

DEPARTMENT OF ENERGY

Federal Energy Regulatory Commission

[Docket No. CP99-152-000]

Canadian-Montana Pipe LIne Corporation; Notice of Application for Section 3 Authorization and Request for a Presidential Permit

Correction

In notice document 99–4879 beginning on page 9985, in the issue of Monday, March 1, 1999, make the following correction:

On page 9985, in the third column, the docket number is corrected to read as set forth above.

[FR Doc. C9–4879 Filed 3–4–99; 8:45 am]

BILLING CODE 1505–01–D

DEPARTMENT OF ENERGY

Federal Energy Regulatory Commission

[CP99–214–000]

Reliant Energy Gas Transmission Company; Notice of Request Under Blanket Authorization

Correction

In notice document 99–4627, beginning on page 9330, in the issue of Thursday, February 25, 1999, the docket number should read as set forth above.

[FR Doc. C9–4627 Filed 3–4–99; 8:45 am]

BILLING CODE 1505–01–D

DEPARTMENT OF TRANSPORTATION

Federal Aviation Administration

14 CFR Part 25

[Docket No. 28930; Amdt. No. 25–98]

RIN 2120–AF82

Revision of Gate Requirements for High-Lift Device Controls

Correction

In rule document 99–2971, beginning on page 6160, in the issue of Monday, February 8, 1999, make the following correction(s):

§ 25.145 [Corrected]

1. On page 6164, in the second column, in amendatory instruction 2, in the fourth line, ''the'' should read ''that''.

2. On the same page, in the second column, in § 25.145(d), in the first line, ''if'' should read ''If''.

[FR Doc. C9–2971 Filed 3–4–99; 8:45 am]

BILLING CODE 1505–01–D

DEPARTMENT OF TRANSPORTATION

14 CFR Part 71

[Airspace Docket No. 99-ACE-5]

Amendment to Class E Airspace; El Dorado, KS

Correction

In rule document 99–4176 beginning on page 8507, in the issue of Monday, February 22, 1999, make the following correction:

§ 71.1 [Corrected]

On page 8508, in the third column,in § 71.1, under the heading **ACE KS E5 El Dorado, KS [Revised]**, in the 10th line, ''64.'' should read ''6.4''.

[FR Doc. C9–4176 Filed 3–4–99; 8:45 am]

BILLING CODE 1505–01–D

federal register

Friday
March 5, 1999

Part II

Department of Transportation

Research and Special Programs Administration

49 CFR Part 171, et al.

Harmonization With the United Nations Recommendations, International Maritime Dangerous Goods Code, and International Civil Aviation Organization's Technical Instructions; Final Rule

DEPARTMENT OF TRANSPORTATION

Research and Special Programs Administration

49 CFR Parts 171, 172, 173, 174, 175, 176, 177, 178 and 180

[Docket No. RSPA–98–4185 (HM–215C)]

RIN 2137–AD15

Harmonization With the United Nations Recommendations, International Maritime Dangerous Goods Code, and International Civil Aviation Organization's Technical Instructions

AGENCY: Research and Special Programs Administration (RSPA), DOT.

ACTION: Final rule.

SUMMARY: This final rule consolidates Docket HM–215C and HM–217 (''Labeling Requirements for Poisonous Materials''). RSPA is amending the Hazardous Materials Regulations (HMR) to maintain alignment with international standards by incorporating numerous changes to proper shipping names, hazard classes, packing groups, special provisions, packaging authorizations, air transport quantity limitations and vessel stowage requirements. In addition, RSPA is making other amendments to the HMR, including eliminating the ''Keep Away From Food'' label for poisonous materials in Division 6.1, Packing Group III. Because of recent changes to the International Maritime Dangerous Goods Code (IMDG Code), the International Civil Aviation Organization's Technical Instructions for the Safe Transport of Dangerous Goods by Air (ICAO Technical Instructions), and the United Nations Recommendations on the Transport of Dangerous Goods (UN Recommendations), these revisions are necessary to facilitate the transport of hazardous materials in international commerce.

DATES: *Effective Date:* October 1, 1999.

Voluntary Compliance Date: RSPA is authorizing immediate voluntary compliance, with the exception of the provisions contained in § 173.301(i). Persons voluntarily complying with these regulations should be aware that petitions for reconsideration may be received and, as a result of RSPA's evaluation of those petitions, the amendments adopted in this final rule could be subject to further revision.

Delayed Compliance Date: Unless otherwise specified, compliance with the amendments adopted in this final rule is required beginning on October 1, 2000.

Incorporation by Reference Date: The incorporation by reference of publications listed in this final rule has been approved by the Director of the **Federal Register** as of October 1, 1999.

FOR FURTHER INFORMATION CONTACT: Bob Richard, Assistant International Standards Coordinator, telephone (202) 366–0656, or Joan McIntyre, Office of Hazardous Materials Standards, telephone (202) 366–8553, Research and Special Programs Administration, U.S. Department of Transportation, 400 Seventh Street, S.W., Washington, D.C. 20590–0001.

SUPPLEMENTARY INFORMATION:

I. Introduction

This final rule consolidates two rulemakings; Docket HM–215C, ''Harmonization with the UN Recommendations, IMDG Code and ICAO Technical Instructions'' and the previous Docket HM–217, ''Labeling Requirements for Poisonous Materials.'' By publication of Docket HM–215C notice of proposed rulemaking (NPRM) [63 FR 44312], Docket HM–217 was terminated as a separate rulemaking action.

II. Background

On December 21, 1990, RSPA published a final rule [Docket HM–181; 55 FR 52402] which comprehensively revised the Hazardous Materials Regulations (HMR), 49 CFR Parts 171 to 180, with respect to hazard communication, classification, and packaging requirements, based on the UN Recommendations. One intended effect of the rule was to facilitate the international transportation of hazardous materials by ensuring a basic consistency between the HMR and international regulations.

The UN Recommendations are not regulations, but are recommendations issued by the UN Committee of Experts on the Transport of Dangerous Goods. These recommendations are amended and updated biennially by the UN Committee of Experts and are distributed to nations throughout the world. They serve as the basis for national, regional, and international modal regulations (specifically the IMDG Code, issued by the International Maritime Organization (IMO), and the ICAO Technical Instructions, issued by the ICAO Dangerous Goods Panel). In 49 CFR 171.12, the HMR authorize hazardous materials shipments prepared in accordance with the IMDG Code if all or part of the transportation is by vessel, subject to certain conditions and limitations. Offering, accepting and transporting hazardous materials by aircraft, in compliance with the ICAO Technical Instructions, and by motor vehicle either before or after being transported by aircraft, are authorized in § 171.11 (subject to certain conditions and limitations).

On December 29, 1994, RSPA published a final rule [Docket HM–215A; 59 FR 67390] amending the HMR by incorporating changes to more fully align the HMR with the seventh and eighth revised editions of the UN Recommendations, Amendment 27 to the IMDG Code and the 1995–96 ICAO Technical Instructions. The final rule provided consistency with international air and sea transportation requirements which became effective January 1, 1995.

On May 6, 1997, RSPA published a final rule [Docket HM–215B; 62 FR 24690] amending the HMR by incorporating changes to more fully align the HMR with the ninth revised edition of the UN Recommendations, Amendment 28 to the IMDG Code and the 1997–1998 ICAO Technical Instructions. The final rule provided consistency with international air and sea transportation requirements which became effective January 1, 1997.

In a final rule published October 29, 1998 (Docket HM–215C; 63 FR 57929), RSPA incorporated by reference the latest editions of the ICAO Technical Instructions and the IMDG Code into the HMR. This action ensured that international shippers could begin complying with changes to international air and vessel standards, which become effective on January 1, 1999, in the event that this final rule was not published by that date. In addition, the October 29, 1998 final rule amended a shipping paper requirement for the use of the ICAO Technical Instructions.

This final rule amends the HMR based on the tenth revised edition of the UN Recommendations, the 1999–2000 ICAO Technical Instructions, and Amendment 29 to the IMDG Code with the intent to more fully align the HMR with international air and sea transport requirements which became effective January 1, 1999. Petitions for rulemaking pertinent to harmonization with international standards and the facilitation of international transportation were also considered and are the basis of certain changes incorporated in this final rule. Other changes are based on feedback from the regulated industry and RSPA initiatives.

III. Summary and Overview

On August 18, 1998, RSPA published an NPRM (Docket HM–215C; 63 FR 44312) to continue its efforts to facilitate the transport of hazardous materials in international commerce. RSPA received

approximately 30 comments in response to the NPRM. These comments were submitted by industry associations representing chemical manufacturers and distributors and packaging manufacturers and reconditioners. Comments were also submitted from a gas strut manufacturer, a battery manufacturer, a chemical manufacturer, a paint manufacturer and distributor, and Transport Canada. Commenters expressed support of RSPA's effort to align the HMR with international standards to provide consistency and facilitate the international transportation of hazardous materials. The majority of commenters supported various proposals, but some commenters raised concerns and recommended alternative amendments to certain proposals which are discussed in Section IV of this final rule. Some commenters suggested amendments which are beyond the scope of this final rule and must first be subject to an NPRM to provide adequate opportunity for notice and comments. These issues may be addressed in separate rulemakings.

Amendments to the HMR contained in this final rule include:

—Addition of a new approval provision to allow use of recycled plastics material for the manufacturing of plastic drums and jerricans.
—Amendments to the Hazardous Materials Table (HMT) which add, revise or remove certain proper shipping names, hazard classes, packing groups, special provisions, including portable tank requirements, packaging authorizations, bulk packaging requirements, and passenger and cargo aircraft maximum quantity limitations.
—Amendments to the List of Marine Pollutants which remove, revise and add certain entries.
—Amendments to remove, revise and add certain special provisions, including one new special provision to deregulate cotton under specific conditions.
—Amendment of the n.o.s. and generic proper shipping names which are required to be supplemented with technical names in association with the basic description.
—Incorporation of provisions authorizing the reconditioning of packagings other than metal drums.
—Incorporation of four new shipping descriptions to more clearly describe internal combustion engines and vehicles powered by flammable liquid and flammable gas fuels.
—Elimination of the KEEP AWAY FROM FOOD label for poisonous materials in Division 6.1, Packing Group III. Requiring the use of a POISON or TOXIC label on packagings containing materials meeting the toxicity criteria for poisonous materials in Division 6.1, Packing Group III. Allowing optional text on, or adjacent to, the POISON or TOXIC label to read ''PG III.''
—Addition of reciprocity provisions for Canadian cylinders.
—Amendment of continuing requalification requirements for portable tanks and intermediate bulk containers (IBCs) which are intended for the transport of a single material.
—Addition of requirements for limited quantity packagings containing fragile inner packagings.
—Incorporation of an exception for certain shock absorbers, struts, gas springs and shocks and other automobile energy absorbing articles.
—Amendment of IBC repair, qualification and maintenance requirements.

IV. Section-by-Section Summary of Regulatory Changes

Part 171

Section 171.2. RSPA is amending paragraph (d)(1) by adding the letters ''CTC'' to the list of specification indications which may not be misrepresented according to § 171.2(c). This is necessary as a result of a new provision in § 173.301(i) authorizing the use of CTC specification cylinders under certain conditions.

Section 171.7. RSPA is updating the incorporation by reference for four American Society of Mechanical Engineers (ASTM) standards, one American Pyrotechnics Association (APA) standard, one Department of Defense (DOD) standard, and the UN Recommendations. The ICAO Technical Instructions were updated to the 1999–2000 edition and the IMDG Code was updated to Amendment 29, in a final rule, published October 29, 1998 [Docket HM–215C; 63 FR 44312] and effective January 1, 1999. One new incorporation by reference is added under the International Organization for Standardization (ISO).

''ASTM D 3278—95 Standard Test Methods for Flash Point of Liquids by Small Scale (Setaflash) Closed-Cup Apparatus'' is updated to the 1996 edition. ''ASTM D 56-93 Standard Test Method for Flash Point by Tag Closed Tester,'' ''ASTM D 93–94 Standard Test Method for Flash Point by Pensky-Martens Closed Cup Tester'' and ''ASTM D 3828–93 Standard Test Method for Flash Point by Small Scale Closed Tester'' are updated to the 1997 editions. These updates reflect the latest revisions to these standards which are used for the classification of Class 3 flammable liquids in §§ 173.120 and 173.121. ''APA Standard 87–1, Standard for Construction and Approval for Transportation of Fireworks, Novelties, and Theatrical Pyrotechnics'' is updated to the January 23, 1998 version which brings the standards up to date with current industry practices. ''DOD TB 700–2; NAVSEAINST 8020.8; AFTO 11A–1–47; DLAR 8220.1: Explosives Hazard Classification Procedure'' is updated to the January 1998 edition. References to the UN Recommendations are updated to the tenth revised edition and an incorrect reference to § 172.519 is removed in the second column. RSPA reviewed the updated standards and concluded that no major technical amendments have been incorporated into these standards.

Finally, consistent with the addition of a new special provision for the entry ''Cotton,'' NA1365, ''ISO 8115, Cotton Bales—Dimensions and Density, 1986 Edition'' is added to the table of material incorporated by reference. (See the amendments to the Hazardous Materials Table.)

Section 171.8. The text for the ''N.O.S.'' definition is revised to reflect the changes in this final rule regarding the addition of a new symbol to specify the n.o.s. and generic proper shipping names which are required to be supplemented with a technical name. (See the preamble discussion under §§ 172.101(b) and 172.203(k)(3)).

Sections 171.11, 171.12 and 171.12a. Paragraphs (d)(14), (b)(17) and (b)(16) of §§ 171.11, 171.12 and 171.12a, respectively, are revised for consistency with § 173.306(a)(1) which provides certain exceptions for limited quantities of compressed gases in containers of not more than four fluid ounces.

Section 171.12a. The amendments proposed to this section in the NPRM providing for reciprocity for certain Canadian specification cylinders to be transported within the U.S. will be incorporated into § 173.301(i). See preamble discussion under § 173.301.

Section 171.14. Paragraph (d) is revised to provide a delayed implementation date for amendments adopted in this final rule. The effective date of the final rule is October 1, 1999. However, RSPA is authorizing an immediate voluntary compliance date to allow shippers to prepare their shipments in accordance with the new ICAO, IMDG Code and HMR provisions. RSPA is also authorizing a delayed mandatory compliance date with the new requirements until October 1, 2000. This delay offers a sufficient phase-in

period to implement new provisions and deplete current stocks of shipping papers, labels, placards and packagings affected by the new requirements. In addition, paragraph (d)(2) permits intermixing of old and new hazard communication requirements until October 1, 2000. As stated in the NPRM, based on its own initiative and comments provided in petitions, RSPA is extending a delayed implementation period for use of the POISON label for Division 6.1, Packing Group III materials and allowing continued use of the KEEP AWAY FROM FOOD label until October 1, 2003.

Part 172

Section 172.101. RSPA received favorable comments for including the addition of a new symbol to § 172.101(b) and the Hazardous Materials Table (HMT) to denote the n.o.s. and generic proper shipping names which are required to be supplemented with the technical name of the hazardous material (in parentheses and in association with the basic description). In the NPRM, RSPA proposed using the asterisk (*) as the new symbol. It has since been brought to RSPA's attention that the asterisk symbol poses a problem for computer searches. Therefore, in this final rule, RSPA is replacing the asterisk symbol with the letter ''G'' to identify n.o.s. and generic proper shipping names which must meet the technical name requirement. Previously, these proper shipping names were listed in § 172.203(k)(3). The change is adopted in this final rule to simplify and improve the use of the HMR. As a result of the change, § 172.203(k)(3) is removed. In addition, approximately 19 new proper shipping names are added to be required to be supplemented with a technical name. The technical name requirement for these entries are consistent with the UN Recommendations. As discussed in the NPRM, certain proper shipping names are currently required to be supplemented with a technical name in the UN Recommendations. However, in the opinion of RSPA, these entries do not warrant a supplemental technical name. The majority of these are pesticides with proper shipping names which RSPA believes are sufficiently descriptive. RSPA believes that requiring these proper shipping names to be supplemented with technical names adds minimal value for emergency response purposes while introducing an unwarranted burden on the shipper. On this basis, RSPA is not adopting the technical name requirement for these proper shipping names. Readers should be aware that certain n.o.s. and generic proper shipping names may be required to be supplemented with technical names when being transported internationally. In addition, based on its own initiative, RSPA is adding or removing certain proper shipping names concerning the technical name requirement for consistency with the tenth revised edition of the UN Recommendations. (See preamble discussion under § 172.203.)

A commenter stated that the plus (+) sign is not an appropriate symbol to denote materials classified on the basis of human experience because it is used for other purposes in the HMR. RSPA does not agree with the commenter that the plus sign is an inappropriate symbol and points out that the plus sign is presently used in the HMR to indicate materials classified on the basis of human experience. In the NPRM, RSPA proposed to add the plus sign to additional materials which are classified on the basis of human experience consistent with the UN Recommendations. RSPA is not convinced that there would be any benefit in using a different symbol.

Another commenter expressed concern that the proposal to add a plus sign to Column (1) of the HMT for epichlorohydrin on the basis of human experience would cause his company economic hardship. The commenter stated that, if adopted, the classification would be fixed for every mixture or solution containing epichlorohydrin, including very dilute solutions of epichlorohydrin in water even if the mixtures or solutions do not meet the criteria for hazard classification in the HMR. In response to this comment, RSPA notes that a mixture or solution containing epichlorohydrin where the hazard is significantly different from that of the pure material should be evaluated on the basis of classification criteria. If such a mixture or solution does not meet the corresponding hazard class, a different proper shipping name may be used. Therefore, RSPA is adopting, as proposed, the plus sign for epichlorohydrin and other materials identified in the NPRM.

The Hazardous Materials Table (HMT). Amendments to the HMT for the purpose of harmonizing with the tenth revised edition of the UN Recommendations include the following:

The plus (+) sign is added to Column 1 to fix the proper shipping name, hazard class and packing group for the entries, ''Aminophenols (*o-;m-;p-*),'' ''Chlorodinitrobenzenes,'' ''Dichloroanilines, liquid,'' ''Dichloroanilines, solid,'' ''o-Dichlorobenzene,'' ''N,N-Diethylaniline,'' ''Epichlorohydrin,'' ''Nitroanilines (*o-;m-;p-;*),'' ''Nitroanisole,'' ''Nitrobenzene,'' ''Nitrophenols (*o-;m-;p-;*),'' ''Phenetidines,'' ''Phenylenediamines (*o-;m-;p-;*),'' ''Toluene diisocyanate,'' ''Toluidines, *liquid*'' and ''Toluidines, *solid*.'' This action aligns the HMR with the UN Recommendations which use Special Provision 279 to indicate materials which are classified on the basis of human experience.

Various other changes to the HMT include the following:

A number of hazardous materials proper shipping names are revised, including the deletion of the word ''commercial'' from the entries, ''Charges, shaped, commercial, *without detonator,*'' (UN 0059, 0439, 0440 and 0441), the revision of the entry ''Amyl alcohols'' to ''Pentanols'' and the revision of the entry ''Dithiocarbamate pesticides, liquid, toxic'' to ''Thiocarbamate pesticide, liquid, toxic.''

For entries such as ''Aluminum alkyls'' and ''Sodium nitrite,'' the subsidiary risks are revised. A typographical error in the NPRM's regulatory text for the entry ''Sodium nitrite'' resulted in omitting the primary hazard and is corrected in this final rule.

The entries, ''Aviation regulated liquid, n.o.s.'' and ''Aviation regulated solid, n.o.s.'' are added for alignment with the ICAO Technical Instructions and the UN Recommendations.

The entry ''Wheel chair, electric'' is removed as a proper shipping name and an italicized entry is added to refer users of the HMR to the proper shipping name ''Battery-powered vehicle *or* Battery-powered equipment.'' RSPA received a comment requesting a revision to § 175.10(a)(20)(iv)(C) which requires the packaging to be marked ''Battery, wet, with wheelchair'' and which the commenter referred to as a proper shipping name. The commenter stated that the proper shipping name is not in the HMT. RSPA points out that in § 175.10(a)(20)(iv)(C), ''Battery, wet, with wheelchair'' is a marking and not a proper shipping name. On this basis, RSPA has made no changes to § 175.10(a)(20)(iv)(C).

For materials such as ''Chlorosilanes, corrosive, n.o.s,'' Column 7 is revised to reflect the alignment of the portable tank assignments with those in the UN Recommendations.

In the NPRM, RSPA proposed to revise the Column (7) special provisions relating to portable tanks, for the entry, ''Corrosive liquids, toxic, n.o.s.,'' UN2922, for Packing Groups I and II. A

commenter pointed out that the revisions are not consistent with the UN Recommendations. RSPA agrees with the commenter and is not adopting the proposed revisions.

For the entry, ''Plastic molding compounds *in dough, sheet or extruded rope form evolving flammable vapor,*'' to correct an error, the non-bulk packaging authorization reference is revised to read ''221.'' In addition, § 173.221 is amended to authorize bulk packagings. The packaging authorization for the entry, ''Polymeric beads, expandable, *evolving flammable vapor*'' is revised to read ''221.'' (See additional preamble discussion under § 173.221.)

For the entries, ''Batteries, wet, filled with acid, *electric storage*'' and ''Batteries, wet, filled with alkali, *electric storage*'' RSPA is increasing the passenger aircraft quantity limitation from 25 kg gross mass to 30 kg gross mass. This change is consistent with the amendments to the 1999–2000 edition of the ICAO Technical Instructions.

In response to a petition for rulemaking (P–1316), RSPA proposed that baled cotton not meeting the criteria of any hazard class would be excepted from the requirements of the HMR under certain conditions. In this final rule, RSPA is adding a new special provision for NA1365, ''Cotton'' (dry), to exclude it from the HMR when it is baled in accordance with ISO 8115, ''Cotton Bales—Dimensions and Density'' to a density of at least 360 kg/m^3 (22.4lb/ft^3) and it is transported in a freight container or closed transport vehicle. This action is consistent with a decision taken by the IMO and a subsequent competent authority approval issued by RSPA.

As proposed in the NPRM, based on its own initiative, RSPA is adding a new entry, ''Dangerous goods in machinery *or* Dangerous goods in apparatus'' to the HMT. The proper shipping name is assigned identification number, NA8001, and Special Provision 136 is added for directions on class assignment. As stated in the NPRM, this entry was adopted in the ICAO Technical Instructions to provide an exception from the UN packaging performance tests for equipment, machinery or apparatus containing small quantities of hazardous materials. RSPA believes this entry is useful for transport by all modes of transportation and provides a more practical means of describing machinery or apparatus, containing small quantities of hazardous materials, when the machinery or apparatus is not specifically listed in the HMT. A commenter suggested that the proper shipping name be given a Class 9 assignment. RSPA agrees with the commenter. RSPA proposed to the UN Committee of Experts that a UN number and proper shipping name be provided and that Class 9 be assigned. Following the Committee's response, RSPA will address this issue in a future rulemaking.

A commenter requested that RSPA not adopt the proposed change for the entry, ''Chloropicrin.'' In the NPRM, RSPA proposed to change the non-bulk packaging authorization cite in Column (8B) from § 173.227 to § 173.193. The proposed change was in error and RSPA is not adopting this change.

Concerning the new entry, ''Nitroglycerin mixture, desensitized, liquid, flammable, n.o.s.,'' UN3343, RSPA received a comment questioning the impact that the new entry would have on existing competent authority approvals. These competent authority approvals provide for these materials to be described as ''Flammable liquids, n.o.s.,'' UN1993. The commenter asked RSPA to consider ''grandfathering the existing approvals in the final rule.'' It is RSPA's position that to reflect the new shipping description, these approvals can be updated upon a request from the approval holders. RSPA believes that the transition periods adopted in this final rule will provide sufficient time for processing updated approvals in order to avoid any potential inconvenience on the part of approval holders.

The Vessel Operators Hazardous Materials Association (VOHMA) requested that RSPA consider including the alpha-numeric special provisions corresponding to the codes in § 176.84 for materials identifed as requiring stowage ''away from'' foodstuffs or ''separated from'' foodstuffs. VOHMA stated that this action would provide consistent identification of the materials for proper stowage and segregation when being transported by vessel. RSPA believes VOHMA's request has merit and will consider it in a future NPRM to afford the public the opportunity to provide comments.

Readers should be aware that for certain entries in the HMT, such as those with revised proper shipping names, the change may appear as a removal and addition. Readers should review all changes appearing in the § 172.101 HMT for a complete view of the changes.

Appendix B to § 172.101. A number of materials are added, removed or amended in the HMR's List of Marine Pollutants. The amendments are consistent with the marine pollutants identified in Amendment 29 to the IMDG Code. One entry, ''Nitrates, inorganic, n.o.s.,'' which was mistakenly referred to in the NPRM's preamble as being proposed for removal, was actually removed from the marine pollutant list in an earlier final rule published under Docket HM–215B (May 6, 1997; 62 FR 24743).

Section 172.102. Eleven new special provisions are added and one is removed for consistency with the tenth revised edition of the UN Recommendations; three obsolete special provisions are removed; and two are editorially revised as follows:

Special Provision 43 is amended by adding an exception for certain nitrocellulose membrane filters. The exception is consistent with the 1999–2000 edition of the ICAO Technical Instructions.

Special Provision 125 is revised to correct an editorial error for the percentages of phlegmatizers in mixtures.

A new special provision 129 is assigned to the new entry, ''Nitroglycerin mixture, desensitized, liquid, flammable, n.o.s. *with not more than 30% nitroglycerin, by mass*'' to require that the material's classification, transportation, packing group assignment and packaging must be approved by the Associate Administrator for Hazardous Materials Safety.

A new special provision 130 is added for the entry, ''*Battery, dry, not subject to the requirements of this subchapter*'' to identify conditions that must be met before the material may be excepted from the HMR.

A new special provision 131 is assigned to the new entry, ''Flammable solid, oxidizing, n.o.s.,'' (Packing Groups II and III), to prohibit the material from being offered for transportation unless approved by the Associate Administrator for Hazardous Materials Safety.

A new special provision 132 is added for the proper shipping name, ''Ammonium nitrate fertilizers,'' UN2071. The special provision allows this material to be excepted from the requirements of the HMR provided a UN trough test (Section 38, UN Manual of Test and Criteria) demonstrates that the material is not liable to self-sustaining decomposition, and that the material does not contain an excess of nitrate greater than 10% by mass. This material is only regulated when offered for transportation by aircraft and vessel modes.

A new special provision 133 is added for the new entry, ''Air bag inflators, compressed gas *or* Air bag modules, compressed gas *or* Seat-belt pretensioners, compressed gas,'' to

clarify which articles should be transported under these shipping descriptions. The special provision provides conditions for packaging and design of these articles. In the NPRM, RSPA inadvertently included articles containing a Division 2.1 gas for which authorization for transportation is being retained under an exemption. This error is corrected in this final rule. The air bag and seat-belt pretensioner descriptions listed in the HMT may be used only for articles that may be excluded from Class 1.

A new special provision 134 is added for the entry ''Battery-powered vehicle *or* Battery-powered equipment'' to identify the entry as being used for battery-powered equipment or vehicles.

A new special provision 135 is added for the new entries, ''Engines, internal combustion, flammable gas powered,'' ''Engines, internal combustion, flammable liquid powered,'' ''Vehicle, flammable gas powered,'' and ''Vehicle, flammable liquid powered'' to indicate the appropriate shipping description to be used when internal combustion engines are installed in a vehicle.

A new special provision 136 is added for the new entry, ''Dangerous goods in machinery *or* Dangerous goods in apparatus.'' The special provision clarifies the restrictions and exceptions for transporting hazardous materials under the new entry. (Also, see preamble discussion under ''The Hazardous Materials Table.'')

A new special provision 137 is added for the entry, ''Cotton,'' NA1365. See preamble discussion under ''The Hazardous Materials Table (HMT).''

A new special provision 138 is added for the entry, ''Lead compounds, soluble, n.o.s.'' This special provision clarifies the definition for soluble lead compounds.

A new special provision A35 is added for the new entries, ''Aviation regulated liquid, n.o.s.'' and ''Aviation regulated solid, n.o.s.,'' to clarify that the proper shipping names include any substance not meeting any of the other hazard classes, but which has certain properties that could cause extreme annoyance or discomfort in the event of spillage or leakage aboard aircraft to crew members so as to prevent their performance of duties.

Special Provision 17 applies to the entry, ''Hydrogen peroxide, aqueous solutions *with not less than 8 percent but less than 20 percent hydrogen peroxide (stabilized as necessary).*'' Special Provision 17 would be deleted because the information it contains is duplicative with the italicized portion of the proper shipping name.

Special Provision 20 is removed because it no longer is used for any entries in the HMT.

Special Provision 104 is removed for consistency with the UN Recommendations and in response to a petition for rulemaking filed by the Institute of Makers of Explosives (P–1317).

As proposed in the NPRM and based on a previous comment received by RSPA, Special Provision B101 is editorially revised to clarify that when intermediate bulk containers are used, only those constructed of metal are authorized.

Special Provision N9 applies to the entry, ''Cotton waste, oily,'' UN1364. Special Provision N9 is deleted, consistent with the deletion of Special Provision 34 in the tenth revised edition of the UN Recommendations.

Section 172.203. In § 172.203, paragraph (k) is revised to reflect that the letter ''G'' in Column (1) of the HMT identifies n.o.s. and generic proper shipping names requiring a technical name. (See preamble discussion under § 172.101.)

Section 172.313. A new paragraph (d) is added to reflect that ''PG III'' may be marked adjacent to the POISON label as an alternative to displaying the text ''PG III,'' instead of ''Poison'' or ''Toxic,'' below the mid-line of the label. (See preamble discussion under §§ 172.400 and 172.400a.)

Sections 172.400, 172.400a.

For poisonous materials in Division 6.1, Packing Group III, RSPA proposed in the NPRM to eliminate the KEEP AWAY FROM FOOD label and require the use of a POISON label on such packagings. RSPA also proposed to allow optional text on the POISON label to read ''PG III,'' instead of ''POISON'' or ''TOXIC.'' (Readers should refer to the NPRM for background information.) RSPA received approximately ten comments regarding this issue.

Some of the commenters had concerns about international acceptance and harmonization of the ''PG III'' text. Several commenters suggested that RSPA delay consideration and revisit the issue in a future rulemaking to allow more time for comments and to wait until the international community adopts the provisions. One commenter requested that RSPA retain the KEEP AWAY FROM FOOD label as an alternate label. Because provisions in international regulations permit the insertion of text indicating the nature of the risk, it is RSPA's opinion that a POISON label displaying ''PG III'' as text is acceptable in international transportation. Furthermore, RSPA believes that sufficient time for comment has been offered for comments and consideration of the provisions. RSPA published an ANPRM on November 8, 1993, under Docket HM–217 (58 FR 59224), and published an NPRM on August 18, 1998 NPRM, under Docket HM–215C, addressing changes to Division 6.1, Packing Group III labeling requirements consistent with an amendment incorporated in the eighth revised edition of the UN Recommendations. Two commenters requested that RSPA consider hazardous materials employee training and cost impact when considering implementation of the change. RSPA gave consideration to these issues before publishing the NPRM, and as explained in the NPRM, and is providing a sufficient phase-in period to implement the new provisions for training and minimizes any additional costs that may be incurred.

The Air Line Pilots Association (ALPA) stated its opposition to placing only the ''PG III'' marking on the POISON label. ALPA stated that placing the ''PG III'' marking on the label without the ''POISON'' or ''TOXIC'' text would not be understood by hazardous materials employees who are performing loading functions. RSPA disagrees. Section 172.401(c) allows packages of hazardous materials bearing labels which are in conformance with the UN Recommendations, ICAO Technical Instructions, IMDG Code and Canadian TDG Regulations, to be shipped in the U.S. These labels do not have text indicating the hazard, but display pictorial hazard warning symbols, which are internationally recognized.

Most commenters supported an alternative label for Packing Group III, however, a few commenters suggested that RSPA consider alternatives other than the ''PG III'' text on the POISON label, such as a special handling label or that ''PG III'' be allowed to be marked adjacent to the POISON label. After consideration of commenters' recommendations, RSPA is adopting the recommendation that a ''PG III'' marking be allowed to be displayed adjacent to the POISON label as suggested by these commenters. The segregation requirements of §§ 174.680(b), 176.600(c) and 177.841(e)(3) are revised to reflect this change.

In conclusion, RSPA is eliminating the KEEP AWAY FROM FOOD label, requiring the use of a POISON label on such packagings, and allowing ''PG III'' as optional text on the POISON label or as a marking adjacent to the label.

Section 172.405. Paragraph (f)(10) in 172.405 is revised to reflect that a label for a Division 6.1 Packing Group III

material may be modified to display the text ''PG III'' instead of ''POISON'' or ''TOXIC,'' below the mid-line of the label. Alternatively, ''PG III'' may be marked adjacent to the label as authorized by § 172.313. (See also, §§ 174.680, 176.600 and 177.841.)

Section 172.407. The table in paragraph (b) is revised to add the lettering size requirements for SPONTANEOUSLY COMBUSTIBLE and DANGEROUS WHEN WET labels.

Section 172.431. This section is removed and reserved, thereby deleting the specifications for the KEEP AWAY FROM FOOD label.

Section 172.504. Consistent with the changes in §§ 172.400, 172.400a, 172.405 and 172.407, in the paragraph (e) Table 2, the entry for Division 6.1, Packing Group III is removed and the entry for Division 6.1, Packing Group I or II, other than Zone A or B inhalation hazard is revised. Paragraph (f)(10) is revised to reflect that a placard for Division 6.1, PG III material may be modified to display the text ''PG III'' below the mid-line of the placard or adjacent to the POISON label.

Section 172.553. This section is removed and reserved, in line with § 172.431, to delete the specifications for the KEEP AWAY FROM FOOD label.

Part 173

Section 173.1. For uniformity with other references in the HMR, the reference to the ''Recommendations of the United Nations Committee of Experts on the Transport of Dangerous Goods'' in paragraph (d) is revised to read ''UN Recommendations.''

Section 173.2a. As proposed in the NPRM, the § 173.2a, paragraph (b) Precedence of Hazard Table is revised to align it with the UN Recommendations' Precedence of Hazard Table. Consistent with the UN Recommendations, RSPA is revising two entries to provide for the Division 4.3, Packing Group II hazard and the Division 5.1, Packing Group II hazards to take precedence over the Class 8 Packing Group II hazard.

Section 173.25. In the NPRM, RSPA proposed to revise paragraph (b) to authorize shrink-wrapped or stretch-wrapped trays as outer packagings only if the inner packagings are not fragile, liable to break or be easily punctured (such as those made of glass, porcelain, stoneware or certain plastics). Several commenters stated that they supported the proposed change to eliminate the requirement that shrink-wrapped or stretch-wrapped trays conform to the PG III performance requirements. However, several commenters, including The Hazardous Materials Advisory Council (HMAC) and the National Paint and Coatings Association (NPCA) expressed concern with the text ''Inner packagings are not fragile, liable to break or be easily punctured'' and stated that this text may need further clarification. The Chemical Specialties Manufacturers Association (CSMA) stated that the term ''certain plastics'' should be clarified to explain what is and is not acceptable. None of the commenters offered any suggested wording. RSPA notes that the proposed text is consistent with the text in the UN Recommendations and that to clarify what is meant by fragile packagings, including ''certain plastics,'' the proposal identifies examples of such packagings (namely, ''such as packagings made of glass, porcelain, stoneware or certain plastics.''). RSPA also notes that the term ''fragile'' is used in § 178.601(g)(2)(i) and that its use there has not posed any significant difficulties in interpretation. RSPA also received a request to increase the 20 kg gross weight limitation. RSPA will consider refinements to this text to further clarify the meaning of fragile packaging and for increasing the 20 kg gross weight limitation on the basis of specific written proposals and may consider them for amendment of international and domestic regulations in a future rulemaking.

Section 173.28. In the NPRM, RSPA proposed to revise paragraph (c)(2) and add a new paragraph (c)(5) to authorize the reconditioning of packagings other than metal drums. RSPA received comments suggesting revisions to clarify the intent of the paragraph. The Association of Container Reconditioners (ACR) stated that the proposed changes to paragraph (c)(2) do not establish a clear and orderly definition for the reconditioning of non-bulk packages, other than steel drums. HMAC recommended clarification of the wording ''all components.'' RSPA agrees with both commenters and is incorporating the recommended editorial changes into this final rule. This revision is consistent with amendments adopted in the tenth revised edition of the UN Recommendations.

Section 173.29. In § 173.29(b)(2)(iv)(B), the referenced absolute pressure ''less than 276 kPa (40 psia); at 21° C (70° F)'' is corrected to read ''less than 280 kPa (40.6 psia); at 20° C (68° F)'' for consistency with the absolute pressure reference in § 173.115(b).

Section 173.32b. In the NPRM, RSPA proposed to revise paragraph (b)(1) to allow for the internal inspection of IM portable tanks to be waived or substituted by other test methods if a leakproofness test is performed prior to each filling. One commenter identified an analytical method which is used to determine leakage in Teflon PTFE-lined tanks and requested that it be authorized. RSPA is familiar with this method and has issued an exemption (DOT E–11827) to allow its use in place of performing the 2.5 year internal inspection. The procedure is very detailed and does not lend itself to incorporation into the regulations. To streamline the process of approving other acceptable methods, RSPA is providing an approval provision to allow other alternative procedures when approved by the Associate Administrator for Hazardous Materials Safety.

Section 173.32c. Paragraph (j) is revised for consistency with the UN Recommendations to allow IM portable tanks which are filled to less than 20% of their capacity, to be offered for transportation. Also, for consistency with the UN Recommendations, the provision excluding non-flowable solids is broadened to include viscous liquids with a low flow rate.

Section 173.34. RSPA is amending the table in paragraph (e) by adding a footnote to indicate that CTC specification cylinders are subject to the provisions in § 173.301(i).

Section 173.35. RSPA proposed in the NPRM to eliminate a provision prohibiting the reuse of fiberboard, wooden and some flexible intermediate bulk containers (IBCs) but to maintain a restriction against the reuse of multiwall paper flexible IBCs (13M1 and 13M2).

The Association of Container Reconditioners (ACR) in referring to paragraph (b)(2), stated that if the required markings are missing, it may not be possible for a reuser or reconditioner to be sure how to remark the IBC. RSPA maintains that it is the responsibility of the reuser or reconditioner to ensure that the IBC is marked correctly and if the required markings are no longer legible and cannot be established, the IBC no longer qualifies as a UN standard packaging.

Another commenter expressed concern about permitting the reuse of corrugated (fiberboard) IBCs with respect to the degradation of the fiberboard due to reuse. As set forth in paragraph (b), each IBC must be visually inspected to ensure it is free from corrosion, contamination, cracks or other damage which would render the IBC unsafe for transportation. If the IBC has damage which would render it unsafe for transportation, it is the shipper's obligation to not reuse the IBC.

Based on the foregoing, RSPA is adopting the changes as proposed. Also

see the preamble discussion in § 180.352 concerning IBCs.

Section 173.56. In paragraphs (b)(2)(i) and (b)(3)(i), the reference to a DOD incorporation by reference document is updated by removing an outdated edition date. A corresponding change with the updated edition date is made under § 171.7.

Section 173.59. Consistent with amendments adopted in the tenth revised edition of the UN Recommendations and consequential amendments to the HMT, the word ''commercial'' is deleted from the proper shipping names, ''Charges, shaped, commercial, *without detonator*'' appearing in this section.

Section 173.121. In the NPRM, RSPA proposed to revise paragraph (b) to align it with the UN Recommendations based on a decision taken by the UN Committee of Experts at its nineteenth session. Paragraph (b) provides an exception for viscous flammable liquids such as paints, enamels, varnishes, adhesives and polishes with a flash point of less than 23 °C to be classified as PG III materials, provided the material does not contain any substance with a primary or subsidiary risk of Division 6.1 or Class 8. In the ninth revised edition, the UN Committee of Experts included an exception which authorized mixtures containing not more than 5% of substances in Packing Group I or Packing Group II of Division 6.1 or Class 8, or not more than 5% of substances in Packing Group I of Class 3 requiring a Division 6.1 or Class 8 subsidiary label to be reclassified in PG III in the Recommendations. This exception was not adopted by ICAO or IMO based in part on proposals submitted by RSPA, and has since been removed from the UN Recommendations. Although the National Paint and Coatings Association (NPCA) supports the revision for viscous flammable liquids, NPCA expressed concern that the text is not consistent with international standards. Because the UN Recommendations removed the exception, the text proposed by RSPA and adopted in this final rule is consistent with the tenth revised edition of the UN Recommendations, the 1999–2000 ICAO Technical Instructions and Amendment 29 to the IMDG Code. As stated in the NPRM, RSPA believes the amendment enhances safety while simplifying the classification provisions in § 173.121.

Section 173.159. In § 173.159(g)(2), RSPA is authorizing additional packagings for electrolyte, acid or alkaline corrosive battery fluid included with storage batteries and filling kits. RSPA received a petition for rulemaking (P–1313) which provided data supporting that the corrosive effect of battery fluid on steel is slight and that steel drums and steel boxes have a structural integrity that exceeds the presently authorized plywood and wooden boxes. RSPA agrees with the commenter and is revising paragraph (g)(2) to read ''strong, rigid outer packagings'' to authorize the use of steel drums and steel boxes. Also, this change eliminates the need for exemption, DOT E–10989.

A commenter requested that in paragraph (c)(6), the minimum Mullen test strength of corrugated slip covers be reduced from 200 pounds to 125 pounds. This request is beyond the scope of this final rule and may be considered in a rulemaking in the future.

Two commenters recommended that RSPA amend the HMR to provide additional information on the application of the entry, ''Battery, wet, non-spillable,'' UN2800, to enhance consistency with the ICAO Technical Instructions and the IMDG Code. Although the requirements applicable for non-spillable batteries are currently fairly consistent with those in the ICAO Technical Instructions and the IMDG Code, RSPA agrees that additional harmonization could be achieved. Considering that the NPRM did not address requirements for non-spillable batteries, RSPA is not adopting the commenter's suggestion in this final rule. RSPA will take this issue into account and consider whether to propose incorporation of such changes into the HMR in a future NPRM, or develop proposals to the UN Committee of Experts, ICAO or IMO. Persons interested in proposing amendments to further harmonize the requirements for non-spillable batteries are encouraged to provide comments to RSPA with specific recommendations.

Section 173.162. In § 173.162, the packaging requirements for gallium are revised to offer shippers a wider selection of packaging alternatives while maintaining an adequate level of safety. The revision is consistent with the IMDG Code.

Section 173.164. In § 173.164, in paragraph (a), the limitation for quicksilver flasks of not more than 3.5 kg (7.7 pounds) capacity is replaced with 35 kg (77 pounds). This action corrects an editorial error and brings the quantity in line with ICAO. Paragraph (c) is also revised to correct an editorial error by removing the 100 mg. quantity limitation for mercury in manufactured articles or apparatuses.

Section 173.166. Section 173.166 is revised for consistency with the new Division 2.2 entry, ''Air bag inflators pyrotechnic or Air bag modules pyrotechnic or Seat-Belt pretensioners pyrotechnic.'' Paragraph (c) is also revised to clarify that the EX number or product code is required to appear on shipping papers only.

Section 173.196. In § 173.196, paragraph (a)(1)(iii) states that absorbent material must be placed between the primary receptacle and the secondary packaging. Consistent with a decision taken by the ICAO Dangerous Goods Panel, absorbent material is only necessary for liquid materials. On this basis, in § 173.196(a)(1)(iii), the words ''When the primary receptacle contains liquids'' are inserted in the first sentence before ''An absorbent material''.

Section 173.220. RSPA is amending § 173.220 to include requirements for both liquid and gas fueled vehicles consistent with amendments adopted by ICAO in Packing Instruction 900 and the four new shipping descriptions for incorporation in the HMT for internal combustion engines and vehicles. For editorial purposes and clarity, specific requirements in § 173.306(d) relevant to gas powered vehicles and hazardous components installed in vehicles are consolidated in this section. In addition, based on a comment received from the Air Transport Association, RSPA is allowing self-propelled vehicles operated by diesel fuel to be transported by aircraft without having to drain the tank. This amendment is consistent with the ICAO Technical Instructions.

Section 173.221. In response to two petitions for rulemaking (P–1344 and P–1353), RSPA is revising the packaging requirements for ''Polymeric beads, *expandable, evolving flammable vapor*'' and ''Plastic molding compound *in dough, sheet or extruded rope form evolving flammable vapor*'' while consolidating the non-bulk and bulk packaging requirements in § 173.221. The use of bulk packagings are authorized for ''Plastic molding compound *in dough, sheet or extruded rope form evolving flammable vapor.*''

RSPA received a comment to the NPRM from The Composites Fabricators Association requesting that paragraph (a) be revised to include steel racks, metal and plastic crates and shrink-wrap on pallets as non-bulk packaging authorizations for plastic molding compound in dough, sheet or extruded rope form, evolving flammable vapor, when transported on dedicated vehicles or freight containers. The commenter reasoned that the non-bulk authorizations should include packaging options similar to those proposed in the NPRM for bulk

packages in paragraph (b). The commenter states that the use of steel racks, metal or plastic crates, and shrink-wrap on pallets have been utilized safely for non-bulk and bulk packagings of plastic molding compound for decades and their exclusion from non-bulk authorization would place small producers of plastic molding compound at a disadvantage to larger producers. RSPA agrees and is revising this provision accordingly.

The commenter also requested that the italicized descriptions from the HMT, (i.e., ''evolving flammable vapor'' and ''in dough, sheet or extruded rope form evolving flammable vapor'' for plastic molding compound) be added to the proper shipping names in paragraphs (a) and (b). The commenter stated that omitting the italicized description may result in confusion among manufacturers of plastic molding compounds that do not evolve flammable vapor. RSPA agrees with the commenter and is revising paragraphs (a) and (b) to reflect the clarification.

Section 173.222. RSPA is removing the current provisions appearing in § 173.222 pertaining to wheelchairs transported in commerce. The removal of these provisions is consistent with the amendment removing the entry for ''Wheel chair, electric'' in the HMT. As stated earlier in the preamble discussion to the HMT, an italicized entry is added to refer users of the HMR to ''Battery-powered vehicle *or* Battery-powered equipment,'' UN3171. ''Battery-powered vehicle'' and ''Battery-powered equipment'' are the proper shipping names used in the ICAO Technical Instructions, IMDG Code and UN Recommendations for wheel chair, electric. Section 173.222 will contain requirements applicable to the new entry, ''Dangerous goods in machinery *or* Dangerous Goods in Apparatus.'' These requirements are consistent with those currently in the ICAO Technical Instructions. (Also see preamble discussion under the HMT.)

Section 173.224. RSPA is adding the word ''product'' before the word ''evaluation'' in paragraph (c)(3). This change clarifies that the exception for samples applies for purposes of shipping products for evaluation and not only for hazard classification purposes.

Section 173.225. In paragraph (b), a new organic peroxide formulation is added to the Organic Peroxides table consistent with the tenth revised edition of the UN Recommendations. Various entries are corrected due to typographical errors. n addition, in line with the revision in § 173.224(c)(3), the word ''product'' is inserted before the word ''evaluation'' in paragraph (c)(2). In addition, various changes are made to correct printing errors.

Section 173.243. RSPA is adding a new paragraph (e)(3) to authorize a material with a Class 8 subsidiary hazard, PG III to be packaged in accordance with § 173.242. In the IMDG Code, certain dual hazard materials with a subsidiary hazard of Class 8, PG III are permitted in IBCs, consistent with those specified in § 173.242. Section 173.242(e) authorizes certain dual hazard materials with subsidiary risks of Class 3, with a flash point greater than 38° C, and Division 6.1, PG III to be packaged in intermediate bulk containers specified in § 173.242. However, this exception is not applied to dual hazard materials with subsidiary hazards of Class 8, PG III. RSPA has issued a number of competent authority approvals consistent with the intermediate bulk container assignments for these materials in the IMDG Code, and on this basis, is incorporating this allowance into the HMR.

Section 173.301. RSPA is revising paragraph (i) to clarify that non-DOT specification cylinders which are being imported into or exported from the U.S. or passing through the U.S., in the course of being shipped between places outside the U.S., may be offered and accepted for transportation and transported by motor vehicle within a single port area (including contiguous harbors) when packaged, marked, classed, labeled, stowed and segregated in accordance with the IMDG Code. This exception was not readily apparent in § 173.301(i) which resulted in numerous inquiries by users of the HMR.

This section also is revised to allow use of Canadian Transport Commission (CTC) specification cylinders for transportation to, from and within the U.S. In the NPRM, based in part on a petition for rulemaking submitted by the Compressed Gas Association, Inc. (CGA, P–1321), RSPA proposed to authorize use of certain Canadian cylinders manufactured in conformance with the Canadian Transport of Dangerous Goods (TDG) Regulations and marked ''TDG'' or ''CTC.'' The NPRM proposed four conditions for use of these cylinders including a requirement that the cylinder be marked ''DOT/'' immediately before the Canadian specification marking (such as, ''DOT/CTC''). Comments supported the proposal authorizing Canadian cylinders to be filled and transported to, from and within the U.S. However, several commenters, including CGA and the National Welding Supply Association, Inc. (NWSA) and Transport Canada were opposed to marking Canadian specification cylinders at the time of requalification with a ''DOT'' marking preceding the Canadian marking already on the cylinder. They stated that a cylinder in full conformance with the TDG Regulations should not be required to be marked ''DOT'' and they requested that RSPA allow the cylinders to transported in commerce in the U.S. without any additional marking.

Transport Canada stated that ''Canadian cylinders, like DOT cylinders, are manufactured worldwide under controlled certification, third party approval and retest procedures consistent with RSPA's third party approval and retest procedures.'' They also pointed out that cylinders manufactured and approved according to the TDG Regulations are currently marked ''TC'' and that there are no Canadian cylinders marked ''TDG.'' Earlier Canadian manufactured cylinders have the markings ''CTC'', ''CRC'' and ''BTC.'' They requested that RSPA consider authorizing use of all TC specification packagings, including those corresponding to DOT or MC specification markings.

One commenter stated that because the authorization to use Canadian cylinders is included in § 171.12a, as opposed to Part 173 of the HMR, the provision falls short of full acceptance of cylinders approved by Transport Canada. The commenter stated that the proposed provision would not permit the transport of Canadian cylinders from one point in the U.S. to another, or transport from the U.S. into Canada.

On the basis of the comments, RSPA is adopting the proposed provisions with several modifications. RSPA is adding the authorization to use CTC cylinders in § 173.301, instead of § 171.12a. The authorization will allow cylinders marked ''CTC'' and conforming to TDG Regulations to be transported to, from and within the U.S. Section 171.2(d)(1) is amended by adding the letters ''CTC'' to the list of specification indications that may not be misrepresented according to § 171.2(c). Section 173.34(e) is amended to include the retest periods for CTC specification cylinders and to allow these foreign cylinders to be excepted from § 173.301(j) when they conform to certain conditions. RSPA is not including the requirement to mark Canadian specification cylinders at the time of requalification with a ''DOT'' marking preceding the Canadian marking already on the cylinder. To allow time for trade associations to inform retesters and fillers about the decisions taken in this rule, RSPA is not

authorizing immediate voluntary compliance; that is, upon publication of this final rule, with the new requirements in § 173.301(i)(2) for CTC specification cylinders. RSPA is authorizing use of the new requirements applicable to CTC specification cylinders consistent with the effective date of the final rule (October 1, 1999).

RSPA is not authorizing use of CRC and BTC cylinders in § 173.301(i). RSPA believes that there is not an overwhelming number of cylinders bearing the ''CRC'' or ''BTC'' marks available for transport into the U.S. to justify addressing them in § 173.301(i). These cylinders were manufactured prior to 1973 and many are no longer in service. RSPA is concerned that recognizing these additional marks would unnecessarily complicate the cylinder specification marking system used in the U.S. In addition, RSPA is not authorizing the use of TC specification cylinders in this final rule because they are marked with the service pressure in metric units according to the Canadian TDG Regulations. RSPA is concerned that the metric marking on these cylinders would be confusing for U.S. retesters and refillers. RSPA proposed the adoption of four new metric-marked DOT cylinder specifications in a proposed rule (HM–220; 63 FR 58469) published October 30, 1998. RSPA may consider authorizing the use of TC cylinders once certain issues are addressed, such as the training and education for retesters and fillers, and the differences in marking requirements for TC cylinders and those for the proposed new DOT specification cylinders. The decisions taken in this rule are not intended to and do not impact the continued acceptance of Canadian or U.S. cylinders which are dual marked ''CTC'' and ''DOT'' to indicate that they conform to the requirements of the TDG Regulations and the HMR.

Section 173.306. RSPA received several comments pertaining to the NPRM's proposal to include an exception in § 173.306(f) for accumulators intended to function as shock absorbers, struts, gas springs, pneumatic springs or other energy absorbing devices. In the NPRM, RSPA proposed to except the accumulators from the requirements of the HMR, if they meet certain conditions. The majority of commenters supported the exception and complimented RSPA for harmonizing the HMR with the UN Recommendations. The American Automobile Manufacturers Association (AAMA) stated that efficiencies and cost savings will be realized by adopting the exception. One commenter suggested a change to the exception, as proposed in the NPRM, by requesting that the minimum burst pressure for pressurized accumulators be changed to three times the charge pressure. The commenter provided no technical details or safety justification for the alternative requirement, other than to claim that an industry standard specifies a safety factor of two times the charge pressure. The commenter also stated that the proposed exception will not effect the exemption, DOT E 8786. RSPA points out that the exemption does not authorize a minimum burst pressure of three times the charge pressure. On the contrary, the exemption specifies burst pressures consistent with those proposed in the NPRM.

Based on the foregoing, RSPA is adopting, as proposed, the new accumulator exception by adding a new paragraph (f)(4). This amendment is consistent with Special Provision 283 in the tenth revised edition of the UN Recommendations, as modified in a petition from the AAMA, (P–1335). RSPA also is adopting, as proposed, an approval provision to allow accumulators not conforming to the provisions of the new exception parameters to be considered by RSPA under its approvals program. In addition, the provisions in paragraphs (d)(1), (d)(2), (d)(3) and (d)(4) are relocated to the revised § 173.220 and the subparagraphs are removed.

Part 174

Section 174.81. The paragraph (f) Compatibility Table for Class 1 (Explosive) Materials is revised to allow Compatibility Group G to be loaded and transported with Compatibility Groups C, D and E under certain conditions. This allowance is consistent with the § 176.144(a) Table for Authorized Mixed Stowage for Explosives aboard vessels and with the IMDG Code. RSPA is revising the § 177.848 Compatibility Table to reflect the same allowance.

Section 174.680. Paragraph (b) is revised to authorize separation in the same car, rather than segregation in different cars, of Division 6.1, Packing Group III materials from foodstuffs. The reference to the KEEP AWAY FROM FOOD label is removed and replaced by a reference to a modified POISON label displaying ''PG III'' text, or a ''PG III'' marking placed immediately adjacent to the POISON label.

Part 175

Section 175.630. Paragraph (a) is amended by removing the reference to the KEEP AWAY FROM FOOD label.

Part 176

Section 176.76. A new paragraph (i) is added, consistent with Amendment 29 of the IMDG Code, to require flammable gases or liquids having a flashpoint of 23° C or less to be stowed away from possible sources of ignition.

Section 176.83. Paragraphs (a)(1), (a)(3), (a)(8) are revised and a new paragraph (a)(10) is added to clarify segregation requirements aboard vessels. In addition, in the § 176.83(g) Segregation Table for the segregation requirement ''Away From,'' ''No restriction'' for ''Open versus open—On deck'' is revised to read ''At least 3 meters.'' These changes are consistent with Amendment 29 of the IMDG Code.

Section 176.600. This section is revised to specify that packages containing a Division 6.1, Packing Group III material and bearing a modified POISON label displaying the text ''PG III,'' or a ''PG III'' marking adjacent to the POISON label, must be stowed away from living quarters, ventilation ducts serving living quarters and separated from foodstuffs. This stowage requirement does not apply when hazardous materials and foodstuffs are stowed in different closed transport units.

Part 177

Section 177.841. Paragraph (e)(3) is revised to specify requirements for separating Division 6.1, PG III materials from foodstuffs, consistent with provisions in § 177.848. However, a package containing a Division 6.1, PG III material and bearing either a primary or subsidiary POISON hazard warning label with text displaying ''PG III,'' or an adjacent ''PG III'' marking, may be transported on the same vehicle as foodstuffs if separated to prevent commingling.

Section 177.848. In paragraph (f), the Compatibility Table for Class 1 (Explosive) Materials is revised to allow Compatibility Group C to be loaded and transported on the same vehicle with Compatibility Groups C, D and E under certain conditions. This allowance is consistent with the wording in the § 176.144(a) Table for Authorized Mixed Stowage for Explosives aboard vessels and in the IMDG Code. RSPA is also revising the § 174.81 Compatibility Table to reflect the same allowance.

Part 178

Section 178.270–3. In paragraph (e), a reference to ISO 82–1974(E) Steels-Tensile Testing is revised to correct a printing error.

Section 178.509. As proposed in the NPRM, paragraph (b) is amended to

authorize the use of recycled plastic materials of known origin and characteristics for the manufacture of UN specification plastic drums and jerricans, when approved by the Associate Administrator for Hazardous Materials Safety. The Association of Container Reconditioners (ACR) expressed their support of the general goal of encouraging greater reuse of recycled plastic in new drums. However, ACR believes the proposal, as presented, is inadequate and that RSPA is ignoring action taken by the UN Committee of Experts, creating a significant burden on the approvals process, and possibly creating supply and demand imbalances. RSPA believes that at the present time, the use of recycled plastics should only be allowed under an approval process. RSPA believes additional experience data is needed to support introduction of specific provisions for its use into the HMR.

Also, due to a typographical error in paragraph (b) in the NPRM, the word ''when'' is corrected to read ''unless.''

Section 178.703. Under Docket HM–215B (62 FR 24743), RSPA added a requirement to § 178.703(b)(6)(ii) which stated, ''Where the outer casing of a composite intermediate bulk container can be dismantled, each of the detachable parts must be marked with the month and year of manufacture and name or symbol of the manufacturer.'' This addition was adopted consistent with changes in the UN Recommendations and was reconsidered by the UN Sub-committee of Experts at its fifteenth session because IBC manufacturers asked for clarification of the term ''detachable parts.'' The Sub-committee adopted revised text to identify this requirement as applying only to parts intended to be detached for dismantling. RSPA is incorporating this text into the HMR in response to concerns raised by industry regarding the costs associated with applying the existing HMR marking requirements.

Section 178.813. RSPA is revising paragraph (b) to provide for the inner receptacle of a composite IBC to be tested without the outer packaging, provided the test results are not affected. This provision was inadvertently omitted in previous efforts to harmonize the HMR with the UN Recommendations.

Section 180.352. In the NPRM, in paragraph (b), RSPA proposed to relocate to § 173.35, a requirement that a person must perform a visual inspection prior to filling an IBC. The periodic leakproofness test and visual inspection requirements were proposed to be retained in paragraphs (b)(1) and (b)(2). In paragraph (b)(3), consistent with the changes in § 173.35, RSPA proposed to allow the reuse of rigid plastic and composite IBCs, to require that they must also be internally inspected at least every five years. This is consistent with paragraph 6.5.1.6.4 of the UN Recommendations.

RSPA proposed to add a new paragraph (c) to provide for the repair, testing and inspection of IBCs which are repaired after being damaged (for example, due to an impact, such as an accident). This provision was inadvertently omitted in Docket HM–215B [62 FR 24690] and is consistent with the UN Recommendations.

Two commenters supported the proposal, but were concerned that IBCs may be reused when they are not fully capable of withstanding transportation rigors. The commenters requested RSPA to establish specific inspection criteria. In response to these comments, RSPA points out that inspection criteria were proposed in the NPRM and are adopted in this final rule. However, if industry develops concensus standards with more detailed and specific inspection criteria for determining the adequacy of various types of IBCs for reuse, RSPA will consider incorporating such standards in the HMR in a future rulemaking.

ACR also recommended that RSPA revise the definition of IBC design type to permit replacement of inner receptacles of composite IBCs with receptacles manufactured by companies other than the original manufacturer, as well as replacement of service and structural equipment. This is beyond the scope of this final rule and should be proposed to RSPA in a petition for rulemaking. However, as stated in current § 178.801(c)(7)(iv), a packaging that differs in service equipment is not considered to be a new design type.

The Rigid Intermediate Bulk Container Association (RIBCA) recommended that RSPA include provisions for the maintenance of serviceable IBCs, as well as the repair of damaged IBCs. This issue also is beyond the scope of this final rule and may be addressed in a separate rulemaking.

Based on the foregoing, RSPA is adopting the changes as proposed. (Also see preamble discussion under § 173.35.)

V. Rulemaking Analyses and Notices

A. Executive Order 12866 and DOT Regulatory Policies and Procedures

This final rule is not considered a significant regulatory action under section 3(f) of Executive Order 12866 and, therefore, was not reviewed by the Office of Management and Budget. The rule is not considered a significant rule under the Regulatory Policies and Procedures of the Department of Transportation [44 FR 11034].

B. Executive Order 12612

This final rule has been analyzed in accordance with the principles and criteria contained in Executive Order 12612 (''Federalism''). Federal hazardous materials transportation law, 49 U.S.C. 5701–5127, contains an express preemption provision (49 U.S.C. 5125(b)) that preempts State, local, and Indian tribe requirements on certain covered subjects. Covered subjects are:

(i) The designation, description, and classification of hazardous material;

(ii) The packing, repacking, handling, labeling, marking, and placarding of hazardous material;

(iii) The preparation, execution, and use of shipping documents related to hazardous material and requirements related to the number, contents, and placement of those documents;

(iv) The written notification, recording, and reporting of the unintentional release in transportation of hazardous material; or

(v) The design, manufacturing, fabricating, marking, maintenance, reconditioning, repairing, or testing of a packaging or container represented, marked, certified, or sold as qualified for use in transporting hazardous material.

This final rule addresses covered subjects under items i, ii, iii and v above and, adopted as final, would preempt State, local, or Indian tribe requirements not meeting the ''substantively the same'' standard. Federal hazardous materials transportation law provides at § 5125(b)(2) that if DOT issues a regulation concerning any of the covered subjects DOT must determine and publish in the **Federal Register** the effective date of Federal preemption. The effective date may not be earlier than the 90th day following the date of issuance of the final rule and not later than two years after the date of issuance. RSPA has determined that the effective date of Federal preemption for these requirements will be 180 days after the effective date of a final rule under this docket. Thus, RSPA lacks discretion in this area, and preparation of a federalism assessment is not warranted.

C. Regulatory Flexibility Act

This final rule incorporates changes introduced in the tenth revised edition of the UN Recommendations, the 1997–98 ICAO Technical Instructions, and Amendment 29 to the IMDG Code. (The

ICAO Technical Instructions and the IMDG Code were updated in a final rule, published October 29, 1998 [Docket HM–215C; 63 FR 44312].) It applies to offerors and carriers of hazardous materials and will facilitate the transportation of hazardous materials in international commerce by providing consistency with international requirements. U.S. companies, including numerous small entities competing in foreign markets, will be forced to comply with a dual system of regulation, to their economic disadvantage, if the changes in this final rule are not adopted. The changes are intended to avoid this result. The costs associated with this final rule are considered to be so minimal as to not warrant preparation of a regulatory impact analysis or regulatory evaluation. In contrast, the majority of amendments should result in cost savings. No cost increases are associated with the incorporation of an exception for certain shock absorbers, struts, gas springs and shocks, and other automobile energy absorbing articles in § 173.306(f). This amendment should result in an increased cost savings for the automotive industry. Although the labeling requirements for poisonous materials in this final rule may affect some small business entities that ship or transport hazardous materials, any adverse economic impact should be offset through a lengthy transition period, retention of current operational requirements, and modification of the POISON or TOXIC label. The amendments for IBCs would remove prohibitions for reusing certain IBCs which would result in costing savings for industry by allowing IBCs to be inspected and reused, instead of used and discarded. In addition, the amendments to the IBC marking requirements in § 178.703 will eliminate the burden of unnecessary markings which will also result in cost savings.

A number of amendments in this final rule will result in relaxation of overly burdensome requirements which will result in cost savings. For example, the removal of the requirement to performance test shrink or stretch-wrapped trays containing limited quantities of hazardous materials should result in a cost savings for many companies. The authorization to allow use of recycled plastic materials when approved by the Associate Administrator for Hazardous Materials Safety, the relaxation of filling requirements for IM portable tanks, the authorization to use steel packages for batteries and the amendments for packaging gallium, mercury, polymeric beads and plastic molding compound are other examples where cost savings will be realized. Many companies involved in domestic, as well as global operations, will realize economic benefits as a result of the amendments. Therefore, I certify that this final rule will not, if promulgated, have a significant economic impact on a substantial number of small entities.

D. Paperwork Reduction Act

The requirements for information collection have been approved by the Office of Management and Budget (OMB) under OMB control numbers 2137–0034 for shipping papers and 2137–0557 for approvals. Under the Paperwork Reduction Act of 1995, no person is required to respond to a collection of information unless it displays a valid OMB control number.

E. Regulation Identifier Number (RIN)

A regulation identifier number (RIN) is assigned to each regulatory action listed in the Unified Agenda of Federal Regulations. The Regulatory Information Service Center publishes the Unified Agenda in April and October of each year. The RIN number contained in the heading of this document can be used to cross-reference this action with the Unified Agenda.

F. Unfunded Mandates Reform Act

This final rule does not impose unfunded mandates under the Unfunded Mandates Reform Act of 1995. It does not result in costs of $100 million or more to either State, local or tribal governments, in the aggregate, or to the private sector, and is the least burdensome alternative that achieves the objective of the rule.

List of Subjects

49 CFR Part 171

Exports, Hazardous materials transportation, Hazardous waste, Imports, Incorporation by reference, Reporting and recordkeeping requirements.

49 CFR Part 172

Education, Hazardous materials transportation, Hazardous waste, Labeling, Markings, Packaging and containers, Reporting and recordkeeping requirements.

49 CFR Part 173

Hazardous materials transportation, Packaging and containers, Radioactive materials, Reporting and recordkeeping requirements, Uranium.

49 CFR Part 174

Hazardous materials transportation, Radioactive materials, Railroad safety.

49 CFR Part 175

Air carriers, Hazardous materials transportation, Radioactive materials, Reporting and recordkeeping requirements.

49 CFR Part 176

Hazardous materials transportation, Maritime carriers, Radioactive materials, Reporting and recordkeeping requirements.

49 CFR Part 177

Hazardous materials transportation, Motor carriers, Radioactive materials, Reporting and recordkeeping requirements.

49 CFR Part 178

Hazardous materials transportation, Motor vehicle safety, Packaging and containers, Reporting and recordkeeping requirements.

49 CFR Part 180

Hazardous materials transportation, Motor carriers, Motor vehicle safety, Packaging and containers, Railroad safety, Reporting and recordkeeping requirements.

In consideration of the foregoing, 49 CFR Chapter I is amended as follows:

PART 171—GENERAL INFORMATION, REGULATIONS, AND DEFINITIONS

1. The authority citation for part 171 continues to read as follows:

Authority: 49 U.S.C. 5101–5127; 49 CFR 1.53.

§ 171.2 [Amended]

2. In § 171.2, in paragraph (d)(1), the wording ‘‘‘MC,’ or ‘UN’;’’ is removed and ‘‘‘CTC,’ ‘MC,’ or ‘UN’;’’ is added in its place.

§ 171.7 [Amended]

3. In the § 171.7(a)(3) Table, the following changes are made:

a. Under ‘‘American Pyrotechnics Association’’, for the entry ‘‘APA Standard 87–1, Standard for Construction and Approval for Transportation of Fireworks and Novelties’’, the wording ‘‘Fireworks and Novelties’’ is revised to read ‘‘Fireworks, Novelties, and Theatrical Pyrotechnics’’ and the wording ‘‘April 1993 Edition’’ is revised to read ‘‘January 23, 1998 version’’.

b. Under ‘‘American Society for Testing and Materials’’, for the entry ‘‘ASTM D 56–93 Standard Test Method for Flash Point by Tag Closed Tester’’, the wording ‘‘ASTM 56–93’’ is revised to read ‘‘ASTM D 56–97a’’.

c. Under ''American Society for Testing and Materials'', for the entry ''ASTM 93–94 Standard Test Methods for Flash Point by Pensky-Martens Closed Tester'', the wording ''Closed Tester'' is revised to read ''Closed Cup Tester'' and the wording ''ASTM 93–94'' is revised to read ''ASTM D 93–97''.

d. Under ''American Society for Testing Materials'', for the entry ''ASTM D 3278–95 Standard Test Methods for Flash Point of Liquids by Setaflash Closed-Cup Apparatus,'' the word ''Setaflash'' is revised to read ''Small Scale'' and the wording ''ASTM D 3278–95'' is revised to read ''ASTM D 3278–96''.

e. Under ''American Society for Testing Materials'', for the entry ''ASTM D 3828–93 Standard Test Methods for Flash Point by Small Scale Closed Tester'', the wording ''ASTM D 3828–93'' is revised to read ''ASTM D 3828–97''.

f. Under ''Department of Defense (DOD),'' for the entry ''DOD TB 700–2; NAVSEAINST 8020.8; AFTO 11A–1–47; DLAR 8220.1: Explosives Hazard Classification Procedure, December 1989'', the number A8020.8'' is revised to read 8020.8B'' and the wording ''Procedure, December 1989'' is revised to read ''Procedures, January 1998''.

g. Under ''International Organization for Standardization'', a new entry ''ISO 8115 Cotton bales—Dimensions and density, 1986 Edition'' is added in alpha-numeric order in the first column and the reference ''172.102'' is added in the second column.

h. Under ''United Nations'', for the entry ''UN Recommendations on the Transport of Dangerous Goods, Ninth Revised Edition (1995)'', the wording ''Ninth Revised Edition (1995)'' is revised to read ''Tenth Revised Edition (1997)'' and in the second column, the reference A172.519;'' is removed.

i. Under ''United Nations'', for the entry ''UN Recommendations on the Transport of Dangerous Goods, Manual of Tests and Criteria'', in the second column, the reference ''172.102,'' is added immediately before ''173.21''.

4. In § 171.8, the following definitions are revised to read as follows:

§ 171.8 Definitions and abbreviations.

* * * * *

N.O.S. means not otherwise specified.

N.O.S. description means a shipping description from the § 172.101 table which includes the abbreviation *n.o.s.*

* * * * *

§ 171.11 [Amended]

5. In § 171.11, in paragraph (d)(14), the wording ''An aerosol'' is removed and ''Except as provided for limited quantities of compressed gases in containers of not more than 4 fluid ounces capacity under § 173.306(a)(1) of this subchapter, aerosols'' is added in its place.

§ 171.12 [Amended]

6. In § 171.12, in paragraph (b)(17), the wording ''An aerosol'' is removed and ''Except as provided for limited quantities of compressed gases in containers of not more than 4 fluid ounces capacity under § 173.306(a)(1) of this subchapter, aerosols'' is added in its place.

§ 171.12a [Amended]

7. in § 171.12a, in paragraph (b)(16), the wording ''An aerosol'' is removed and ''Except as provided for limited quantities of compressed gases in containers of not more than 4 fluid ounces capacity under § 173.306(a)(1) of this subchapter, aerosols'' is added in its place.

8. In § 171.14, paragraph (d) introductory text and paragraph (d)(1) are revised and paragraph (d)(3) is added to read as follows:

§ 171.14 Transitional provisions for implementing certain requirements.

* * * * *

(d) A final rule published in the **Federal Register** on March 5, 1999, effective October 1, 1999, resulted in revisions to this subchapter. During the transition period provided in paragraph (d)(1) of this section, a person may elect to comply with either the applicable requirements of this subchapter in effect on September 30, 1999, or the requirements of this subchapter in the March 5, 1999 final rule, in effect on October 1, 1999.

(1) *Transition dates.* The effective date of the March 5, 1999 final rule is October 1, 1999. A delayed compliance date of October 1, 2000 is authorized. On October 1, 2000, all applicable regulatory requirements adopted in the March 5, 1999 final rule in effect on October 1, 1999 must be met.

* * * * *

(3) Until October 1, 2003, the KEEP AWAY FROM FOOD labeling and placarding requirements in effect on September 30, 1999, may continue to be used in place of the new requirements for Division 6.1, Packing Group III materials.

* * * * *

§ 171.14 [Amended]

9. In addition, in § 171.14, the following changes are made:

a. In the table in paragraph (b), in Column 1, the entry ''Division 6.1, PG I and II (other than Zone A or B inhalation hazard)'' is revised to read ''Division 6.1, PG I (other than Zone A or B inhalation hazard), PG II, or PG III''.

b. In the table in paragraph (b), the entry ''Division 6.1, PG III'' is removed.

c. In paragraph (d)(2), in the first sentence, the wording ''in effect on September 30, 1997, or new requirements of this subchapter in the May 6, 1997 rule, in effect on October 1, 1997,'' is removed and ''in effect on September 30, 1999, or new requirements of this subchapter in the March 5, 1999 final rule, in effect on October 1, 1999,'' is added in its place.

PART 172—HAZARDOUS MATERIALS TABLE, SPECIAL PROVISIONS, HAZARDOUS MATERIALS COMMUNICATIONS, EMERGENCY RESPONSE INFORMATION, AND TRAINING REQUIREMENTS

10. The authority citation for part 172 continues to read as follows:

Authority: 49 U.S.C. 5101–5127; 49 CFR 1.53.

11. In § 172.101, paragraph (b) introductory text is revised, paragraphs (b)(4) and (b)(5) are redesignated as paragraphs (b)(5) and (b)(6) respectively, and a new paragraph (b)(4) is added to read as follows:

§ 172.101 Purpose and use of hazardous materials table.

* * * * *

(b) *Column 1: Symbols.* Column 1 of the Table contains six symbols (''+'', ''A'', ''D'', ''G'', ''I'' and ''W'' as follows:

* * * * *

(4) The letter ''G'' identifies proper shipping names for which one or more technical names of the hazardous material must be entered in parentheses, in association with the basic description. (See § 172.203(k).)

* * * * *

§ 172.101 [Amended]

12. In addition, in § 172.101, in paragraph (g), in the Label Substitution Table, the following changes are made:

a. In Column 1, the language ''6.1 (I or II, other than Zone A or B inhalation hazard)'' is revised to read ''6.1 (other than inhalation hazard, Zone A or B)''.

b. The entry ''6.1 (III)[2]'' is removed.

13. In § 172.101, the Hazardous Materials Table is amended by removing, adding, or revising, in appropriate alphabetical sequence, the following entries to read as follows:

§ 172.101 Purpose and use of hazardous materials table.

* * * * *

§ 172.101—HAZARDOUS MATERIALS TABLE

Symbols	Hazardous materials descriptions and proper shipping names	Hazard class or division	Identification numbers	PG	Label codes	Special provisions	(8) Packaging (§ 173.* * *)			(9) Quantity limitations		(10) Vessel stowage	
							Exceptions	Non-bulk	Bulk	Passenger aircraft/rail	Cargo aircraft only	Location	Other
(1)	(2)	(3)	(4)	(5)	(6)	(7)	(8A)	(8B)	(8C)	(9A)	(9B)	(10A)	(10B)
	[REMOVE]												
		*		*	*	*	*		*	*			
	Acetic acid solution, *with more than 10 percent but not more than 80 percent acid, by mass* (UN2790) (PG II).												
		*		*	*	*	*		*	*			
	Air bag inflators *or* Air bag modules *or* Seat-belt pretensioners.												
		*		*	*	*	*		*	*			
	Alkali metal amalgams.												
		*		*	*	*	*		*	*			
	Amyl alcohols (PG II, III).												
		*		*	*	*	*		*	*			
	Automobile, motorcycle, tractor, or other self-propelled vehicle, engine, or other mechanical apparatus. see Engines *or* Battery *etc.*												
		*		*	*	*	*		*	*			
	Battery, wet, with wheelchair, see Wheelchair, electric.												
		*		*	*	*	*		*	*			
	Benzoic derivative pesticides, liquid, flammable, toxic, *flash point less than 23 degrees C.* (UN2770) (PG I, II).												

Benzoic derivative pesticides, liquid, toxic. (UN 3004) (PG I, II, III).							
Benzoic derivative pesticides, liquid, toxic, flammable, *flashpoint not less than 23 degrees C.* (UN 3003) (PG I, II, III).							
Benzoic derivative pesticides, solid, toxic (UN 2769) (PG I, II, III).							
	*	*	*	*	*	*	*
Charges, shaped, commercial, *without detonator* (UN 0059).							
Charges, shaped, commercial, *without detonator* (UN 0439).							
Charges, shaped, commercial *without detonator* (UN 0440).							
Charges, shaped, commercial *without detonator* (UN 0441).							
	*	*	*	*	*	*	*
Dithiocarbamate pesticides, liquid, flammable, toxic, *flash point less than 23 degrees C.* (UN 2772) (PG I, II).							
Dithiocarbamate pesticides, liquid, toxic (UN 3006) (PG I, II, III).							
Dithiocarbamate pesticides, liquid, toxic, flammable, *flashpoint not less than 23 degrees C.* (UN 3005) (PG I, II, III).							
Dithiocarbamate pesticides, solid, toxic (UN 2771) (PG I, II, III).							

§ 172.101—HAZARDOUS MATERIALS TABLE—Continued

Symbols	Hazardous materials descriptions and proper shipping names	Hazard class or division	Identification numbers	PG	Label codes	Special provisions	(8) Packaging (§ 173.* * *)			(9) Quantity limitations		(10) Vessel stowage	
							Exceptions	Non-bulk	Bulk	Passenger aircraft/rail	Cargo aircraft only	Location	Other
(1)	(2)	(3)	(4)	(5)	(6)	(7)	(8A)	(8B)	(8C)	(9A)	(9B)	(10A)	(10B)
		*		*	*	*	*		*	*			
	Elevated temperature liquid, n.o.s., *at or above 100 C and below its flash point* (UN3257).												
		*		*	*	*	*		*	*			
	Engines, internal combustion, *including when fitted in machinery or vehicles.*												
		*		*	*	*	*		*	*			
	Ethyl cyanoacetate.												
		*		*	*	*	*		*	*			
		*		*	*	*	*		*	*			
D	Hexafluoropropylene oxide.												
		*		*	*	*	*		*	*			
	Hydrocarbon gases, compressed, n.o.s. Hydrocarbon gases, liquefied, n.o.s.												
		*		*	*	*	*		*	*			
	Metal alkyl halides, n.o.s. *or* Metal aryl halides, n.o.s. Metal alkyl hydrides, n.o.s. *or* Metal aryl hydrides, n.o.s.												
		*		*	*	*	*		*	*			
	Metal alkyls, n.o.s. *or* Metal aryls, n.o.s.												
		*		*	*	*	*		*	*			
I	Nitrogen triflouride, compressed (Class 2.3).												

	*	*	*	*	*	*	*
Nitroglycerin mixture *with more than 2 percent but not more than 10 percent nitroglycerin, by mass, desensitized.*							
	*	*	*	*	*	*	*
2,5-Norbornadiene *or* Bicyclo [2,2,1]hepta-2,5-diene, inhibited.							
	*	*	*	*	*	*	*
Octyl aldehydes, *flammable.*							
	*	*	*	*	*	*	*
Phenoxy pesticides, liquid, flammable, toxic, *flash point less than 23 degrees C.* (PG I, II).							
Phenoxy pesticides, liquid toxic (PG I, II, III).							
Phenoxy pesticides, liquid, toxic, flammable, *flashpoint not less than 23 degrees C.* (PG I, II, III).							
Phenoxy pesticides, solid, toxic (PG I, II, III).							
	*	*	*	*	*	*	*
Phenyl urea pesticides, liquid, flammable, toxic, *flash point less than 23 degrees C. (PG I, II).*							
	*	*	*	*	*	*	*
Phenyl urea pesticides, liquid, toxic, flammable *flash point not less than 23 degrees C.* (PG I, II, III).							

§ 172.101—HAZARDOUS MATERIALS TABLE—Continued

Symbols	Hazardous materials descriptions and proper shipping names	Hazard class or division	Identification numbers	PG	Label codes	Special provisions	(8) Packaging (§ 173.* * *)			(9) Quantity limitations		(10) Vessel stowage	
							Exceptions	Non-bulk	Bulk	Passenger aircraft/rail	Cargo aircraft only	Location	Other
(1)	(2)	(3)	(4)	(5)	(6)	(7)	(8A)	(8B)	(8C)	(9A)	(9B)	(10A)	(10B)
	Phenyl urea pesticides, solid, toxic (PG I, II, III).												
		*		*	*	*	*		*	*			
	Phthalimide derivative pesticides, liquid, flammable, toxic, *flash point less than 23 degrees C.* (PG I, II).												
	Phthalimide derivative pesticides, liquid, toxic (PG I, II, III).												
	Phthalimide derivative pesticides, liquid, toxic, flammable, *flashpoint not less than 23 degrees C.* (PG I, II, III).												
	Phthalimide derivative pesticides, solid, toxic (PG I, II, III).												
		*		*	*	*	*		*	*			
A W	Polychlorinated biphenyls.												
		*		*	*	*	*		*	*			
	Pyrophoric organometallic compound, n.o.s.												
		*		*	*	*	*		*	*			
D	*Vehicles, self-propelled including internal combustion engines or other apparatus containing an internal combustion Engine or electric storage battery, see* Engines *etc. or* Battery powered *etc. or* Wheel chair, electric).												

		*	*	*	*	*	*	*					
A D	Wheel chair, electric *(spillable or non-spillable type batteries).*												
		*	*	*	*	*	*	*					
	[ADD:]												
		*	*	*	*	*	*	*					
	Acetic acid solution, *not less than 50 percent but not more than 80 percent acid, by mass.*	8	UN2790	II	8	A3, A6, A7, A10, B2, T8.	154	202	242	1 L	30 L	A	
	Acetic acid solution, *with more than 10 percent and less than 50 percent acid, by mass.*	8	UN2790	III	8	T8	154	203	242	5 L	60 L	A	
		*	*	*	*	*	*	*					
	Air bag inflators, compressed gas *or* Air bag modules, compressed gas *or* Seat-belt pretensioners, compressed gas.	2.2	UN3353		2.2	133	166	166	166	75 kg	150 kg	A	
	Air bag inflators, *pyrotechnic or* Air bag modules, *pyrotechnic or* Seat-belt pretensioner, *pyrotechnic.*	9	UN3268	III	9		166	166	166	25 kg	100 kg	A	
		*	*	*	*	*	*	*					
	Alkali metal amalgam, liquid.	4.3	UN1389	I	4.3	A2, A3, N34	None	201	244	Forbidden	1 L	D	40
	Alkali metal amalgam, solid.	4.3	UN1389	I	4.3	B101, B106, N40	None	211	242	Forbidden	15 kg	D	
		*	*	*	*	*	*	*					
	Automobile, motorcycle, tractor, other self-propelled vehicle, engine, or other mechanical apparatus, see Vehicles *or* Battery *etc.*												
G	Aviation regulated liquid, n.o.s.	9	UN3334		9	A35	155	204		No limit	No limit	A	
G	Aviation regulated solid, n.o.s.	9	UN3335		9	A35	155	204		No limit	No limit	A	

§ 172.101—HAZARDOUS MATERIALS TABLE—Continued

Symbols	Hazardous materials descriptions and proper shipping names	Hazard class or division	Identification numbers	PG	Label codes	Special provisions	(8) Packaging (§ 173.* * *)			(9) Quantity limitations		(10) Vessel stowage	
							Exceptions	Non-bulk	Bulk	Passenger aircraft/rail	Cargo aircraft only	Location	Other
(1)	(2)	(3)	(4)	(5)	(6)	(7)	(8A)	(8B)	(8C)	(9A)	(9B)	(10A)	(10B)
		*		*	*	*	*		*	*			
	Bicyclo [2,2,1] hepta-2, 5-diene, inhibited *or* 2,5-Norbornadiene, inhibited.	3	UN2251	II	3		150	202	242	5 L	60 L	D	
		*		*	*	*	*		*	*			
	Bromopropanes	3	UN2344	III	3	T2	150	203	242	60 L	220 L	A	
		*		*	*	*	*		*	*			
		*		*	*	*	*		*	*			
	Charges, shaped, *without detonator.*	1.1D	UN0059	II	1.1D		None	62	None	Forbidden	Forbidden	B.	
	Charges, shaped, *without detonator.*	1.2D	UN0439	II	1.2D		None	62	None	Forbidden	Forbidden	B.	
	Charges, shaped, *without detonator.*	1.4D	UN0440	II	1.4D		None	62	None	Forbidden	75	A	24E
	Charges, shaped, *without detonator.*	1.4S	UN0441	II	1.4S		None	62	None	25 kg	100 kg	A	
		*		*	*	*	*		*	*			
D	Dangerous Goods in Machinery *or* Dangerous Goods in Apparatus.		NA8001			136	None	222	None	No limit	No limit	A	
		*		*	*	*	*		*	*			
G	Dyes, solid, corrosive, n.o.s. *or* Dye intermediates, solid, corrosive, n.o.s.	8	UN3147	1	8		None	211	242	1 kg	25 kg	A	
		*		*	*	*	*		*	*			
	Elevated temperature liquid, n.o.s., *at or above 100 C and below its flash point (including molten metals, molten salts, ect.).*	9	UN3257	III	9	T1	None	None	247	Forbidden	Forbidden	A	85
		*		*	*	*	*		*	*			

		*		*	*	*	*		*	*				
	Engines, internal combustion, *flammable gas powered.*	9	UN3166		9	135	220	220	220	Forbidden	No limit	A		
	Engines, internal combustion, *flammable liquid powered.*	9	UN3166		9	135	220	220	220	No limit	No limit	A		
		*		*	*	*	*		*	*				
G	Flammable solid, oxidizing, n.o.s.	4.1	UN3097	II	4.1, 5.1	131	None	214	214	Forbidden	Forbidden	E		40
G				III	4.1, 5.1	131	None	214	214	Forbidden	Forbidden	D		40
		*		*	*	*	*		*	*				
	Fumigated lading, see §§172.302(g), 173.9 and 176.76(h).													
		*		*	*	*	*		*	*				
G	Hydrocarbon gas mixture, compressed, n.o.s.	2.1	UN1964		2.1		306	302	314, 315	Forbidden	150 kg	E		40
G	Hydrocarbon gas mixture, liquefied, n.o.s.	2.1	UN1965		2.1		306	304	314, 315	Forbidden	150 kg	E		40
		*		*	*	*	*		*	*				
G	Insecticide gases, flammable, n.o.s.	2.1	UN3354		2.1		306	304	314, 315	Forbidden	150 kg	D		40
		*		*	*	*	*		*	*				
G.	Insecticide gases, toxic, flammable, n.o.s. *Inhalation hazard Zone A.*	2.3	UN3355		2.3, 2.1	1	None	192	245	Forbidden	Forbidden	D		40
G	Insecticide gases, toxic, flammable, n.o.s. *Inhalation hazard Zone B.*	2.3	UN3355		2.3, 2.1	2, B9, B14	None	302, 305	314, 315	Forbidden	Forbidden	D		40
G	Insecticide gases, toxic, flammable, n.o.s. *Inhalation hazard Zone C.*	2.3	UN3355		2.3, 2.1	3, B14	None	302, 305	314, 315	Forbidden	Forbidden	D		
G	Insecticide gases toxic, flammable, n.o.s. *Inhalation hazard Zone D.*	2.3	UN3355		2.3, 2.1	4	None	302, 305	314, 315	Forbidden	Forbidden	D		
		*		*	*	*	*		*	*				
	Lithium batteries packed with equipment.	9	UN3091	II	9	29	185	185	None	5 kg gross	35 kg gross.	A		

§ 172.101—HAZARDOUS MATERIALS TABLE—Continued

Symbols	Hazardous materials descriptions and proper shipping names	Hazard class or division	Identification numbers	PG	Label codes	Special provisions	(8) Packaging (§ 173.* * *)			(9) Quantity limitations		(10) Vessel stowage	
							Exceptions	Non-bulk	Bulk	Passenger aircraft/rail	Cargo aircraft only	Location	Other
(1)	(2)	(3)	(4)	(5)	(6)	(7)	(8A)	(8B)	(8C)	(9A)	(9B)	(10A)	(10B)
		*		*	*	*	*		*	*			
	Mercaptans, liquid, flammable, n.o.s. *or* Mercaptan mixture, liquid, flammable, n.o.s..	3	UN3336	I	3	T23	150	201	243	1 L	30 L	E	95
				II	3	T8, T31	150	202	242	5 L	60 L	B	95
				III	3	B1, B52, T7, T30	150	203	241	60 L	220 L	B	95
		*		*	*	*	*		*	*			
	Metal alkyl halides, water-reactive n.o.s. *or* Metal aryl halides, water-reactive, n.o.s..	4.2	UN3049	I	4.2, 4.3	B9, B11, T28, T29, T40.	None	181	244	Forbidden	Forbidden	D	
	Metal alkyl hydrides, water-reactive, n.o.x. *or* Metal aryl hydrides, water-reactive, n.o.s..	4.2	UN3050	I	4.2, 4.3	B9, B11, T28, T29, T40.	None	181	244	Forbidden	Forbidden	D	
	Metal alkyls, water-reactive, n.o.s. *or* Metal aryls, water-reactive n.o.s..	4.2	UN2003	I	4.2, 4.3	B11, T42	None	181	244	Forbidden	Forbidden	D	
		*		*	*	*	*		*	*			
	Nitroglycerin mixture, desensitized, liquid, flammable, n.o.s. *with not more than 30 percent nitroglycerin, by mass*..	3	UN3343		3	129	None	214	None	Forbidden	Forbidden	D	
	Nitroglycerin mixture, desensitized, solid, n.o.s. *with more than 2 percent but not more than 10 percent nitroglycerin, by mass*..	4.1	UN3319	II	4.1	118	None	None	None	Forbidden	0.5 kg	E	
		*		*	*	*	*		*	*			
	Octyl aldehydes	3	UN1191	III	3	B1, T1	150	203	242	60 L	220 L	A	

		*		*	*	*	*		*	*				
	Pentaerythrite tetranitrate mixture, desensitized, solid, n.o.s. *with more than 10 percent but not more than 20 percent PETN, by mass.*	4.1	UN3344	II	4.1	118	None	214	None	Forbidden	Forbidden	E		40
		*		*	*	*	*		*	*				
	Pentanols	3	UN1105	II	3	T1	150	202	242	5 L	60 L	B		
				III	3	B1, B3, T1	150	203	242	60 L	220 L	A		
		*		*	*	*	*		*	*				
	Phenoxyacetic acid derivative pesticide, liquid, flammable, toxic *flashpoint less than 23°C.*.	3	UN3346	I	3, 6.1	T23	None	201	243	Forbidden	30 L	B		40
				II	3, 6.1	T14	None	202	243	1 L	60 L	B		40
	Phenoxyacetic acid derivative pesticide, liquid, toxic.	6.1	UN3348	I	6.1	T24, T26	None	201	243	1 L	30 L	B		40
				II	6.1	T14	153	202	243	5 L	60 L	B		40
				III	6.1	T14	153	203	241	60 L	220 L	A		40
	Phenoxyacetic acid derivative pesticide, liquid, toxic, flammable, *flashpoint not less than 23°C.*	6.1	UN3347	I	6.1, 3	T24, T26	None	201	243	1 L	30 L	B		40
				II	6.1, 3	T14	153	202	243	5 L	60 L	B		40
				III	6.1, 3	T14	153	203	241	60 L	220 L	A		40
	Phenoxyacetic acid derivative pesticide, solid, toxic.	6.1	UN3345	I	6.1		None	211	242	5 kg	50 kg	A		40
				II	6.1		153	212	242	25 kg	100 kg	A		40
				III	6.1		153	213	240	100 kg	200 kg	A		40
		*		*	*	*	*		*	*				
A, W	Polychlorinated biphenyls, liquid.	9	UN2315	II	9	9, 81	155	202	241	100 L	220 L	A		34
A, W	Polychlorinated biphenyls, solid.	9	UN2315	II	9	9, 81	155	212	240	100 kg	200 kg	A		34
		*		*	*	*	*		*	*				
	Pyrethroid pesticide, liquid, flammable, toxic, *flashpoint less than 23 °C.*	3	UN3350	I	3, 6.1	T24, T26	None	201	243	Forbidden	30 L	B		40
				II	3, 6.1	T14	None	202	243	1 L	60 L	B		40
	Pyrethroid pesticide, liquid toxic.	6.1	UN3352	I	6.1		None	211	242	1 L	30 L	A		40
				II	6.1		153	212	242	5 L	60 L	A		40
				III	6.1		153	213	240	60 L	220 L	A		40

§ 172.101—HAZARDOUS MATERIALS TABLE—Continued

Symbols	Hazardous materials descriptions and proper shipping names	Hazard class or division	Identification numbers	PG	Label codes	Special provisions	(8) Packaging (§ 173.* * *)			(9) Quantity limitations		(10) Vessel stowage	
							Exceptions	Non-bulk	Bulk	Passenger aircraft/rail	Cargo aircraft only	Location	Other
(1)	(2)	(3)	(4)	(5)	(6)	(7)	(8A)	(8B)	(8C)	(9A)	(9B)	(10A)	(10B)
	Pyrethroid pesticide, liquid, flammable, toxic, *flashpoint not less than 23 °C.*	6.1	UN3351	I	6.1, 3	T24, T26	None	201	243	1 L	30 L	B	40
				II	6.1, 3	T14	153	202	243	5 L	60 L	B	40
				III	6.1, 3	T14	153	203	241	60 L	220 L	B	40
	Pyrethroid pesticide, soild, toxic.	6.1	UN3349	I	6.1		None	211	242	5 kg	50 kg	A	40
				II	6.1		153	212	242	25 kg	100 kg	A	40
				III	6.1		153	213	230	100 kg	200 kg	A	40
		*		*	*	*	*		*	*			
G	Pyrophoric organometallic compound, water-reactive, n.o.s.	4.2	UN3203	I	4.2, 4.3	T28, T40	None	187	242	Forbidden	Forbidden	D	
		*		*	*	*	*		*	*			
	Refrigerant gas R 404A.	2.2	UN3337		2.2		306	304	314, 315	75 kg	150 kg	A	
	Refrigerant gas R 407A.	2.2	UN3338		2.2		306	304	314, 315	75 kg	150 kg	A	
	Refrigerant gas R 407B.	2.2	UN3339		2.2		306	304	314, 315	75 kg	150 kg	A	
	Refrigerant gas R 407C.	2.2	UN3340		2.2		306	304	314, 315	75 kg	150 kg	A	
		*		*	*	*	*		*	*			
	Thiocarbamate pesticide, liquid, flammable, toxic, *flash point less than 23 degrees C.*	3	UN2772	I	3, 6.1		None	201	243	Forbidden	30 L	B	40
				II	3, 6.1		None	202	243	1 L	60 L	B	40
	Thiocarbamate pesticide, liquid, toxic.	6.1	UN3006	I	6,1	T42	None	201	243	1 L	30 L	B	40
				II	6.1	T14	None	202	243	5 L	60 L	B	40
				III	6.1	T14	153	203	241	60 L	220 L	A	40
	Thiocarbamate pesticides, liquid, flammable, toxic, *flash point not less than 23 degrees C.*	6.1	UN3305	I	6.1, 3	T42	None	201	243	1 L	30 L	B	40
				II	6.1, 3	T14	None	202	243	5 L	60 L	B	40
				III	6.1, 3	T13	153	203	242	60 L	220 L	A	40
	Thiocarbamate pesticides, solid, toxic.	6.1	UN2771	I	6.1		None	211	242	5 kg	50 kg	A	40
				II	6.1		None	212	242	25 kg	100 kg	A	40

				III	6.1		153	213	240	100 kg	200 kg	A		40
	*		*	*	*	*	*		*	*				
Thiourea dioxide	4.2	UN3341	II	4.2		None	212		241	15 kg	50 kg	D		
			III	4.2		None	213		241	25 kg	100 kg	D		
	*		*	*	*	*	*		*	*				
Vehicle, flammable gas powered.	9	UN3166		9	135	220	220		220	Forbidden	No limit	A		
Vehicle, flammable liquid powered.	9	UN3166		9	135	220	220		220	No limit	No limit	A		
	*		*	*	*	*	*		*	*				
Wheel chair, electric, see Battery powered vehicle *or* Battery powered equipment.														
	*		*	*	*	*	*		*	*				
Xanthates	42	UN3342	II	4.2		None	212		241	15kg	50kg	D		40
	*		*	*	*	*	*		*	*				
			III	4.2		None	213		241	25kg	100kg	D		40
[REVISE:]														
	*		*	*	*	*	*		*	*				
Acetonitrile	3	UN1648	II	3	T14	150	202		242	5L	60L	B		40
	*		*	*	*	*	*		*	*				
Aerosols, flammable, n.o.s. (*engine starting fluid) (each not exceeding 1 L capacity).*	2.1	UN1950		2.1	N82	306	None		None	Forbidden	150kg	A		40, 48, 85
	*		*	*	*	*	*		*	*				
G Alkaline earth metal alcoholates, n.o.s.	4.2	UN3205	III	4.2	65	None	213		241	25kg	100kg	B		
	*		*	*	*	*	*		*	*				
Aluminum alkyl halides.	4.2	UN3052	I	4.2, 4.3	B9, B11, T28, T29, T40.	None	181		244	Forbidden	Forbidden	D		
Aluminum alkyl hydrides.	4.2	UN3076	I	4.2, 4.3	B9, B11, T28, T29, T40.	None	181		244	Forbidden	Forbidden	D		
Aluminum alkyls	4.2	UN3051	I	4.2, 4.3	B9, B11, T28, T29, T40.	None	181		244	Forbidden	Forbidden	D		
	*		*	*	*	*	*		*	*				
+ Aminophenols (o-; m-; p).	6.1	UN2512	III	6.1	TI	153	213		240	100 kg	200 kg	A		

§ 172.101—HAZARDOUS MATERIALS TABLE—Continued

Symbols	Hazardous materials descriptions and proper shipping names	Hazard class or division	Identification numbers	PG	Label codes	Special provisions	(8) Packaging (§ 173.* * *)			(9) Quantity limitations		(10) Vessel stowage	
							Exceptions	Non-bulk	Bulk	Passenger aircraft/rail	Cargo aircraft only	Location	Other
(1)	(2)	(3)	(4)	(5)	(6)	(7)	(8A)	(8B)	(8C)	(9A)	(9B)	(10A)	(10B)
		*		*	*	*	*		*	*			
A, W	Ammonium nitrate fertilizers: uniform non-segregating mixtures of nitrogen/phosphate or nitrogen/postash types or complete fertilizers of nitrogen/phosphate/postash type, with not more than 70 percent ammonium nitrate and not more than 0.4 percent total added combustible material or with not more than 45 percent ammonium nitrate with unrestricted combustible material.	9	UN2071	III	9	132	155	213	240	200 kg	200 kg	A	
		*		*	*	*	*		*	*			
G	Articles, explosive, n.o.s.	1.4C	UN0351	II	1.4C	101	None	62	None	Forbidden	75 kb	A	24E
G	Articles, explosive, n.o.s.	1.4D	UN0352	II	1.4D	101	None	62	None	Forbidden	75 kg	A	24E
G	Articles, explosive, n.o.s.	1.4G	UN0353	II	1.4G	101	None	62	None	Forbidden	75 kg	A	24E
		*		*	*	*	*		*	*			
	Batteries, wet, filed with acid, *electric storage*.	8	UN2794	III	8		159	159	159	30 kg gross.	No limit	A	
	Batteries, wet, filed with acid, *electric storage*.	8	UN2795	III	8		159	159	159	30 kg gross.	No limit	A	
		*		*	*	*	*		*	*			
	Batteries, dry, *not subject to the requirements of this subchapter*.					130							
		*		*	*	*	*		*	*			
	Battery-powered vehicle *or* Battery-powered equipment.	9	UN3171		9	134	220	220	None	No limit	No limit.		

		*		*	*	*	*		*	*			
+	Bromine *or* Bromine solutions.	8	UN1744	I	8, 6.1	1, A3, A6, B9, B64, B85, N34, N43, T18, T41.	None	226	249	Forbidden	Forbidden		12, 40, 66, 74, 89, 90
		*		*	*	*	*		*	*			
+	Chlorodinitrobenzenes.	6.1	UN1577	II	6.1	T14	None	212	242	25 kg	100 kg	A	91
		*		*	*	*	*		*	*			
	Chlorosilanes, corrosive, n.o.s.	8	UN2987	II	8	B2, T14, T26	154	202	242	1 L	30 L	C	40
	Chlorosilanes, flammable, corrosive, n.o.s.	3	UN2985	II	3, 8	B100, T17, T26	None	201	243	1 L	5 L	B	40
	Chlorosilanes, water-reactive, flammable, corrosive, n.o.s.	4.3	UN2988	I	4.3,3,8	A2, T18, T26	None	201	244	Forbidden	1 L	D	21, 28, 40, 49, 100
		*		*	*	*	*		*	*			
D, W	Cotton	9	NA1365		9	137, W41	None	None	None	No limit	No limit	A	
A, W	Cotton waste, oily	4.2	UN1364	III	4.2		None	213	None	Forbidden	Forbidden	A	54
		*		*	*	*	*		*	*			
	Detonator assemblies, non-electric *for blasting*.	1.4S	UN0500	II	1.4S		63(f), 63(g)	62	None	25 kg	100 kg	A	
		*		*	*	*	*		*	*			
	Detonators, electric *for blasting*.	1.4S	UN0456	II	1.4S		63(f), 63(g)	62	None	25 kg	100 kg	A	
		*		*	*	*	*		*	*			
	Detonators for ammunition.	1.4S	UN0366	II	1.4S		None	62	None	25 kg	100 kg	A	
		*		*	*	*	*		*	*			
	Detonators, non-electric *for blasting*.	1.4S	UN0455	II	1.4S		63(f), 63(g)	62	None	25 kg	100 kg	A	
		*		*	*	*	*		*	*			
+	Dichloroamilines, liquid.	6.1	UN1590	II	6.1	T14	None	202	243	5 L	60 L	A	40
+	Dichloroanilines, solid.	6.1	UN1590	II	6.1	T14	None	212	242	25 kg	100 kg	A	40
+	o-Dichlorobenzene	6.1	UN1591	III	6.1	T7	153	203	241	60 L	220 L	A	
		*		*	*	*	*		*	*			
	Dichlorophenyl isocyanates.	6.1	UN2250	II	6.1		None	212	242	25 kg	100 kg	B	25, 40, 48
		*		*	*	*	*		*	*			
+	N, N-Diethylaniline	6.1	UN2432	III	6.1	T2	153	203	241	60 L	220 L	A	
		*		*	*	*	*		*	*			
	Diethylzinc	4.2	UN1366	I	4.2, 4.3	B11, T28, T40	None	181	244	Forbidden	Forbidden	D	18
		*		*	*	*	*		*	*			
	Dimethylzinc	4.2	UN1370	I	4.2, 4.3	B11, B16, T28, T29, T40.	None	181	244	Forbidden	Forbidden	D	18

§ 172.101—HAZARDOUS MATERIALS TABLE—Continued

Symbols	Hazardous materials descriptions and proper shipping names	Hazard class or division	Identification numbers	PG	Label codes	Special provisions	(8) Packaging (§ 173.* * *)			(9) Quantity limitations		(10) Vessel stowage	
							Exceptions	Non-bulk	Bulk	Passenger aircraft/rail	Cargo aircraft only	Location	Other
(1)	(2)	(3)	(4)	(5)	(6)	(7)	(8A)	(8B)	(8C)	(9A)	(9B)	(10A)	(10B)
		*		*	*	*	*		*	*			
G	Environmentally hazardous substances, liquid, n.o.s.	9	UN3082	III	9	8, T1	155	203	241	No limit	No limit	A	
G	Environmentally hazardous substances, solid, n.o.s.	9	UN3077	III	9	8, B54, N20	155	213	240	No limit	No limit	A	
		*		*	*	*	*		*	*			
+	Epichlorohydrin	6.1	UN2023	II	6.1, 3	T14	None	202	243	5 L	60 L	A	40
		*		*	*	*	*		*	*			
A, W	Fibers *or* Fabrics, animal *or* vegetable *or* Synthetic, n.o.s. *with animal or vegetable oil.*	4.2	UN1373	III	4.2	137	None	213	241	Forbidden	Forbidden	A	
		*		*	*	*	*		*	*			
	Hexamethylene diisocyanate.	6.1	UN2281	II	6.1	B101, T14	None	202	243	5 L	60 L	C	13, 40
		*		*	*	*	*		*	*			
	Hydrogen peroxide, aqueous solutions *with not less than 8 percent but less than 20 percent hydrogen peroxide (stabilized as necessary).*	5.1	UN2984	III	5.1	A1, B104, T8, T37	152	203	241	2.5 L	30 L	B	25, 75, 106
		*		*	*	*	*		*	*			
+	Isobutyl isocyanate.	3	UN2486	I	3, 6.1	1, B9, B14, B30, B72, T37698, T43, T44.	None	226	244	Forbidden	Forbidden	D	40

		*		*	*	*	*		*	*			
G	Isocyanates, toxic, flammable, n.o.s. *or* Isocyanate solutions, toxic, flammable, n.o.s., *flash point not less than 23 degrees C but not more than 61 degrees C and boiling point less than 300 degrees C.*	6.1	UN3080	II	6.1, 3	T15	None	202	243	5 L	60 L	B	25, 40, 48
G	Isocyanates, toxic, n.o.s. *or* Isocyanate solutions, toxic, n.o.s., *flash point more than 61 degrees C and boiling point less than 300 degrees C.*	6.1	UN2206	II	6.1	T15	None	202	243	5 L	60 L	E	25, 40, 48
G	Isocyanates, toxic, n.o.s. *or* Isocyanate solutions, toxic, n.o.s., *flash point more than 61 degrees C and boiling point less than 300 degrees C.*	6.1	UN2206	III	6.1	T8	153	203	241	60 L	220 L	E	25, 40, 48
		*		*	*	*	*		*	*			
	Isocyanatobenzotrifluorides.	6.1	UN2285	II	6.1, 3	5, B101, T14	None	202	243	5 L	60 L	D	25, 40, 48
		*		*	*	*	*		*	*			
	Lead compounds, soluble, n.o.s.	6.1	UN2291	III	6.1	138	153	213	240	100 kg	200 kg	A	
		*		*	*	*	*		*	*			
	Magnesium alkyls	4.2	UN3053	I	4.2, 4.3	B11, T28, T29, T40.	None	181	244	Forbidden	Forbidden	D	18
		*		*	*	*	*		*	*			
	Nitric acid *other than red fuming, with more than 70 percent nitric acid.*	8	UN2031	I	8, 5.1	B47, B53, T9, T27	None	158	243	Forbidden	2.5 L	D	44, 66, 89, 90, 110, 111
		*		*	*	*	*		*	*			
+	Nitroanilines (*o-; m-; p-;*).	6.1	UN1661	II	6.1	T14	None	212	242	25 kg	100 kg	A	
+	Nitroanisole	6.1	UN2730	III	6.1	T8	153	213	240	100 kg	200 kg	A	
+	Nitrobenzene	6.1	UN1662	II	6.1	T14	None	202	243	5 L	60 L	A	40
		*		*	*	*	*		*	*			
	Nitrogen trifluoride, compressed.	2.2	UN2451		2.2, 5.1		None	302	None	Forbidden	25 kg	D	40

§ 172.101—HAZARDOUS MATERIALS TABLE—Continued

Symbols	Hazardous materials descriptions and proper shipping names	Hazard class or division	Identification numbers	PG	Label codes	Special provisions	(8) Packaging (§ 173.* * *)			(9) Quantity limitations		(10) Vessel stowage	
							Exceptions	Non-bulk	Bulk	Passenger aircraft/rail	Cargo aircraft only	Location	Other
(1)	(2)	(3)	(4)	(5)	(6)	(7)	(8A)	(8B)	(8C)	(9A)	(9B)	(10A)	(10B)
		*		*	*	*	*		*	*			
+	Nitrophenols (*o-; m-; p-;*).	6.1	UN1663	III	6.1	T8, T38	153	213	240	100 kg	200 kg	A	
		*		*	*	*	*		*	*			
	Organic pigments, self-heating.	4.2	UN3313	III	4.2		None	213	241	25 kg	100 kg	C	
		*		*	*	*	*		*	*			
G	Organometallic compound *or* Compound solution *or* Compound dispersion, water-reactive, flammable, n.o.s.	4.3	UN3207	I	4.3, 3	T28	None	201	244	Forbidden	1 L	E	40
G	Organometallic compound *or* Compound solution *or* Compound dispersion, water-reactive, flammable, n.o.s.	4.3	UN3207	II	4.3, 3	T28	None	202	243	1 L	5 L	E	40
G	Organometallic compound *or* Compound solution *or* Compound dispersion, water-reactive, flammable, n.o.s.	4.3	UN3207	III	4.3, 3	T28	None	203	242	5 L	60L	E	40
		*		*	*	*	*		*	*			
D	Other regulated substances, liquid, n.o.s.	9	NA3082	III	9		155	203	241	No limit	No limit	A	
D	Other regulated substances, solid, n.o.s.	9	NA3077	III	9	B54	155	213	240	No limit	No limit	A	
		*		*	*	*	*		*	*			
	Oxygen generator, chemical.	5.1	UN3356	II	5.1	60, A51	None	212	None	Forbidden	25 kg gross.	D	56, 58, 69, 106
		*		*	*	*	*		*	*			
+	Phenetidines	6.1	UN2311	III	6.1	T7	153	203	241	60 L	220 L	A	
		*		*	*	*	*		*	*			
+	Phenylenediamines (o-; m-; p-;).	6.1	UN1673	III	6.1		153	213	240	100 kg	200 kg	A	
		*		*	*	*	*		*	*			
	Piperidine	8	UN2401	I	8, 3	T17	None	201	243	0.5 L	2.5 L	B	

		*		*	*	*	*		*	*				
	Plastic molding compound *in dough, sheet or extruded rope form evolving flammable vapor.*	9	UN3314	III	9	32	155	221	221	100 kg	200 kg	A	85, 87
		*		*	*	*	*		*	*				
	Polyester resin kit	3	UN3269		3	40	152	225	None	5 kg	5 kg	B	
		*		*	*	*	*		*	*				
	Polymeric beads, expandable, *evolving flammable vapor.*	9	UN2211	III	None	32	155	221	221	100 kg	200 kg	A	85, 87
		*		*	*	*	*		*	*				
	Propyleneimine, inhibited.	3	UN1921	I	3, 6.1	A3, N34, T24	None	201	243	1 L	30 L	B	40
		*		*	*	*	*		*	*				
	Refrigerating machines, *containing non-flammable, nontoxic, liquefied gas or ammonia solution (UN2672).*	2.2	UN2857		2.2		306, 307	306	306, 307	450 kg	450 kg	A	
		*		*	*	*	*		*	*				
	Sodium azide	6.1	UN1687	II	6.1		None	212	242	25 kg	100 kg	A	36, 52, 91
		*		*	*	*	*		*	*				
	Sodium nitrite	5.1	UN1500	III	5.1, 6.1	A1, A29	152	213	240	25 kg	100 kg	A	56, 58
		*		*	*	*	*		*	*				
D	Sulfur	9	NA1350	III	9	30, A1	None	None	240	No limit	No limit	A	19, 74
I	Sulfur	4.1	UN1350	III	4.1	30, A1, N20, T1	None	None	240	No limit	No limit	A	19, 74
		*		*	*	*	*		*	*				
+	Toluene diisocyanate.	6.1	UN2078	II	6.1	B110, T14	None	202	243	5 L	60 L	D	25, 40
		*		*	*	*	*		*	*				
+	Toluidines *liquid*	6.1	UN1708	II	6.1	T14	None	202	243	5 L	60 L	A	
+	Toluidines *solid*	6.1	UN1708	II	6.1		None	212	242	25 kg	100 kg	A	
		*		*	*	*	*		*	*				
	Vanadium pentoxide, *non-fused form.*	6.1	UN2862	III	6.1		153	213	240	100 kg	200 kg	A	40
		*		*	*	*	*		*	*				
G	Water-reactive solid, flammable, n.o.s.	4.3	UN3132	I	4.3, 4.1	B101, B106, N40	None	211	242	Forbidden	15 kg	D	
		*		*	*	*	*		*	*				

§ 172.101 [Amended]

14. In addition, in Column (1), in the § 172.101 Hazardous Materials Table, new letter ''G'' is added for each of the following entries:

Alcoholates solution, n.o.s., *in alcohol.*
Alcohols, flammable, toxic, n.o.s.
Aldehydes, flammable, toxic, n.o.s.
Alkali metal alcoholates, self-heating, corrosive, n.o.s.
Alkaline earth metal alcoholates, n.o.s.
Alkaloids, liquid, n.o.s. *or* Alkaloid salts, liquid, n.o.s.
Alkaloids, solid, n.o.s. *or* Alkaloid salts, solid, n.o.s. *poisonous.*
Amines, flammable, corrosive, n.o.s. *or* Polyamines, flammable, corrosive, n.o.s.
Amines, liquid, corrosive, flammable, n.o.s. *or* Polyamines, liquid, corrosive, flammable, n.o.s.
Amines, liquid, corrosive, n.o.s. *or* Polyamines, liquid, corrosive, n.o.s.
Amines, solid, corrosive, n.o.s., *or* Polyamines, solid, corrosive, n.o.s.
Ammunition, toxic *with burster, expelling charge, or propelling charge.* (two entries, UN0020 and UN0021)
Articles, explosive, n.o.s. (UN0349, UN0350, UN0354, UN0355, UN0356, UN0462, UN0463, UN0464, UN0465, UN0466, UN0467, UN0468, UN0469, UN0470, UN0471, UN0472)
Caustic alkali liquids, n.o.s.
Chloroformates, toxic, corrosive, flammable, n.o.s.
Chloroformates, toxic, corrosive, n.o.s.
Combustible liquid, n.o.s.
Components, explosive train, n.o.s. (all four entries)
Compounds, cleaning liquid (two entries, NA1760 and NA1993)
Compressed gas, flammable, n.o.s.
Compressed gas, n.o.s.
Compressed gas, oxidizing, n.o.s.
Compressed gas, toxic, oxidizing, n.o.s. (All hazard zones, four entries)
Compressed gases, toxic, flammable, n.o.s. (All hazard zones, four entries)
Compressed gases, toxic, n.o.s. (All hazard zones, four entries)
Corrosive, liquid, acidic, inorganic, n.o.s.
Corrosive, liquid, acidic, organic, n.o.s.
Corrosive, liquid, basic, inorganic, n.o.s.
Corrosive, liquid, basic, organic, n.o.s.
Corrosive liquid, self-heating, n.o.s.
Corrosive liquids, flammable, n.o.s.
Corrosive liquids, n.o.s.
Corrosive liquids, oxidizing, n.o.s.
Corrosive liquids, toxic, n.o.s.
Corrosive liquids, water-reactive, n.o.s.
Corrosive, solid, acidic, inorganic, n.o.s.
Corrosive, solid, acidic, organic, n.o.s.
Corrosive, solid, basic, inorganic, n.o.s.
Corrosive, solid, basic, organic, n.o.s.
Corrosive solids, flammable, n.o.s.
Corrosive solids, n.o.s.
Corrosive solids, oxidizing, n.o.s.
Corrosive solids, self-heating, n.o.s.
Corrosive solids, toxic, n.o.s.
Corrosive solids, water-reactive, n.o.s.
Disinfectant, liquid, corrosive, n.o.s.
Disinfectants, liquid, corrosive n.o.s.
Disinfectants, liquid, toxic, n.o.s.
Disinfectants, solid, toxic, n.o.s.
Dispersant gases, n.o.s. *see* Refrigerant gases, n.o.s.
Dyes, liquid, corrosive, n.o.s. *or* Dye intermediates, liquid, corrosive, n.o.s.
Dyes, liquid, toxic, n.o.s. *or* Dye intermediates, liquid, toxic, n.o.s.
Dyes, solid, corrosive, n.o.s. *or* Dye intermediates, solid, corrosive, n.o.s.
Dyes, solid, toxic, n.o.s. *or* Dye intermediates, solid, toxic, n.o.s.
Flammable liquid, toxic, corrosive, n.o.s.
Flammable liquids, corrosive, n.o.s.
Flammable liquids, n.o.s.
Flammable liquids, toxic, n.o.s.
Flammable solid, corrosive, inorganic, n.o.s.
Flammable solid, inorganic, n.o.s.
Flammable solid, organic, molten, n.o.s.
Flammable solid, toxic, inorganic, n.o.s.
Flammable solids, corrosive, organic, n.o.s.
Flammable solids, organic, n.o.s.
Flammable solids, toxic, organic, n.o.s.
Gas, refrigerated liquid, flammable, n.o.s. (*cryogenic liquid*).
Gas, refrigerated liquid, n.o.s. (*cryogenic liquid*).
Gas, refrigerated liquid, oxidizing, n.o.s. (*cryogenic liquid*).
Infectious substances, affecting animals *only.*
Infectious substances, affecting humans.
Insecticide gases, n.o.s.
Insecticide gases, toxic, n.o.s.
Isocyanates, flammable, toxic, n.o.s. *or* Isocyanate solutions, flammable, toxic, n.o.s. *flashpoint less than 23 degrees C.*
Isocyanates, toxic, flammable, n.o.s. or Isocyanate solutions, toxic, flammable, n.o.s., *flash point not less than 23 degrees C but not more than 61 degrees C and boiling point less than 300 degrees C.*
Ketones, liquid, n.o.s.
Liquefied gas, flammable, n.o.s.
Liquefied gas, n.o.s.
Liquefied gas, oxidizing, n.o.s.
Liquefied gas, toxic, flammable, n.o.s. (All hazard zone entries)
Liquefied gas, toxic, n.o.s. (All hazard zone entries)
Liquefied gas, toxic, oxidizing, n.o.s. (All hazard zone entries)
Metal salts of organic compounds, flammable, n.o.s.
Metallic substance, water-reactive, n.o.s.
Metallic substance, water-reactive, self-heating, n.o.s.
Nitriles, flammable, toxic, n.o.s.
Nitriles, toxic, flammable, n.o.s.
Nitriles, toxic, n.o.s.
Organic peroxide type B, liquid
Organic peroxide type B, liquid, temperature controlled
Organic peroxide type B, solid
Organic peroxide type B, solid, temperature controlled
Organic peroxide type C, liquid
Organic peroxide type C, liquid, temperature controlled
Organic peroxide type C, solid
Organic peroxide type C, solid, temperature controlled
Organic peroxide type D, liquid
Organic peroxide type D, liquid, temperature controlled
Organic peroxide type D, solid
Organic peroxide type D, solid, temperature controlled
Organic peroxide type E, liquid
Organic peroxide type E, liquid, temperature controlled
Organic peroxide type E, solid
Organic peroxide type E, solid, temperature controlled
Organic peroxide type F, liquid
Organic peroxide type F, liquid, temperature controlled
Organic peroxide type F, solid
Organic peroxide type F, solid, temperature controlled
Organometallic compound, toxic, n.o.s.
Oxidizing liquid, corrosive, n.o.s.
Oxidizing liquid, n.o.s.
Oxidizing liquid, toxic, n.o.s.
Oxidizing solid, corrosive, n.o.s.
Oxidizing solid, flammable, n.o.s.
Oxidizing solid, n.o.s.
Oxidizing solid, self-heating, n.o.s.
Oxidizing solid, toxic, n.o.s.
Oxidizing solid, water-reactive, n.o.s.
Pesticides, liquid, flammable, toxic, *flashpoint less than 23 degrees C.*
Pesticides, liquid, toxic, flammable, n.o.s. *flashpoint not less than 23 degrees C.*
Pesticides, liquid, toxic, n.o.s.
Pesticides, solid, toxic, n.o.s.
Pyrophoric liquid, inorganic, n.o.s.
Pyrophoric liquids, organic, n.o.s.
Pyrophoric metals, n.o.s. *or* Pyrophoric alloys, n.o.s.
Pyrophoric organometallic compound, n.o.s.
Pyrophoric solid, inorganic, n.o.s.
Pyrophoric solids, organic, n.o.s.
Refrigerant gases, n.o.s.
Samples, explosive, *other than initiating explosives*
Self-heating liquid, corrosive, inorganic, n.o.s.
Self-heating liquid, corrosive, organic, n.o.s.
Self-heating liquid, inorganic, n.o.s.
Self-heating liquid, organic, n.o.s.
Self-heating liquid, toxic, inorganic, n.o.s.
Self-heating liquid, toxic, organic, n.o.s.
Self-heating solid, corrosive, inorganic, n.o.s.
Self-heating, solid, corrosive, organic, n.o.s.
Self-heating solid, inorganic, n.o.s.
Self-heating, solid, organic, n.o.s.
Self-heating, solid, oxidizing, n.o.s.
Self-heating solid, toxic, inorganic, n.o.s.
Self-heating, solid, toxic, organic, n.o.s.
Self-reactive liquid type B
Self-reactive liquid type B, temperature controlled
Self-reactive liquid type C
Self-reactive liquid type C, temperature controlled
Self-reactive liquid type D
Self-reactive liquid type D, temperature controlled
Self-reactive liquid type E
Self-reactive liquid type E, temperature controlled
Self-reactive liquid type F
Self-reactive liquid type F, temperature controlled
Self-reactive solid type B
Self-reactive solid type B, temperature controlled
Self-reactive solid type C
Self-reactive solid type C, temperature controlled
Self-reactive solid type D
Self-reactive solid type D, temperature controlled
Self-reactive solid type E
Self-reactive solid type E, temperature controlled

Self-reactive solid type F
Self-reactive solid type F, temperature controlled
Solids containing corrosive liquid, n.o.s.
Solids containing flammable liquid, n.o.s.
Solids containing toxic liquid, n.o.s.
Substances, explosive, n.o.s. (all 13 entries)
Substances, explosive, very insensitive, n.o.s., *or* Substances, EVI, n.o.s.
Tear gas substances, liquid, n.o.s.
Tear gas substances, solid, n.o.s.
Toxic liquid, corrosive, inorganic, n.o.s. (UN3289, PG I AND II)
Toxic liquids, corrosive, inorganic, n.o.s. (UN3289, Hazard Zones A and B)
Toxic liquids, inorganic n.o.s. (UN3287, PG I and III)
Toxic liquids, corrosive, organic, n.o.s. (UN2927, PG I and II)
Toxic liquids, corrosive, organic, n.o.s. (UN2927, Hazard Zones A and B)
Toxic liquids, flammable, organic, n.o.s. (UN2929, PG I and II)
Toxic liquids, flammable, organic, n.o.s. (UN2929, Hazard Zones A and B)
Toxic liquids, organic, n.o.s. (UN2810, PG I, II and III)
Toxic liquids, orgnic, n.o.s. (UN2810, Hazard Zones A and B)
Toxic liquids, oxidizing, n.o.s. (UN3122, PG I and II)
Toxic liquids, oxidizing, n.o.s. (UN3122, Hazard Zones A and B)
Toxic liquids, water-reactive, n.o.s. (UN3132, PG I and II)
Toxic liquids, water-reactive, n.o.s. (UN3123, Hzardous Zones A and B
Toxic solid, corrosive, organic, n.o.s.
Toxic solid, inorganic, n.o.s.
Toxic solids, corresive, organic, n.o.s.
Toxic solids, flammable, organic, n.o.s.
Toxic solids, organic,, n.o.s.
Toxic solids, oxidizing, n.o.s.
Toxic solids, self-heating, n.o.s.
Toxic solids, water-reactive, n.o.s.
Water-reactive, liquid, corrosive, n.o.s.
Water-reactive, liquid, n.o.s.
Water-reactive, liquid, toxic, n.o.s.
Water-reactive, solid, corrosive, n.o.s.
Water-reactive, solid, n.o.s.
Water-reactive, solid, oxidizing, n.o.s.
Water-reactive, solid, self-heating, n.o.s.
Water-reactive, solid, toxic, n.o.s.

14a. In addition, in Column 1, the following changes are made:

a. For the entry, Compounds, tree killing, liquid *or* Compounds, weed killing, liquid (NA1760), the reference ‘‘, G’’ is added.

b. For the entry, Compounds, tree killing, liquid *or* Compounds, weed killing, liquid (NA1993), the reference ‘‘, G’’ is added.

c. For the entry, Compressed gas, toxic, corrosive, n.o.s. (UN3304, Hazard Zones A, B, C and D), the reference ‘‘, G’’ is added.

d. For the entry, Compressed gas, toxic, flammable, corrosive, n.o.s. (UN3305, Hazard Zones A, B, C and D), the reference ‘‘, G’’ is added.

e. For the entry, Compressed gas, toxic, oxidizing, corrosive, n.o.s. (UN3306, Hazard Zones A, B, C and D), the reference ‘‘, G’’ is added.

f. For the entries Hazardous waste, liquid, n.o.s. and Hazardous waste, solid, n.o.s., the reference ‘‘, G’’ is added.

g. For the entry, Insecticide gases *flammable* n.o.s., the reference ‘‘, G’’ is added.

h. For the entry, Liquefied gas, toxic, corrosive, n.o.s. (UN3308, Hazard Zones A, B, C and D), the reference ‘‘, G’’ is added.

i. For the entry, Liquefied gas, toxic, flammable, corrosive, n.o.s. (UN3309, Hazard Zones A, B, C and D), the reference ‘‘, G’’ is added.

j. For the entry, Liquefied gas, toxic, oxidizing, corrosive, n.o.s. (UN3310, Hazard Zones A, B, C and D), the reference ‘‘, G’’ is added.

15. In Appendix B to § 172.101, the List of Marine Pollutants is amended by removing ten entries and adding sixteen entries in alphabetical order to read as follows:

Appendix B to § 172.101—List of Marine Pollutants

S.M.P (1)	Marine pollutant (2)
[REMOVE:]	
	Alkyl (C10–C21) sulphonic acid ester of phenol.
	ortho-Anisidines.
	Barium compounds, soluble, n.o.s.
	Di-*normal*-butyl ketone.
	Diphenyl oxide.
	Isopropenyl chloride.
	Isopropyl chloride.
	3-Methylpyradine.
	Sym-Dichloroethyl ether.
	Tetrachlorovinphos.
[ADD:]	
* *	* * * * *
	Alkylbenzenesulphonates, branched and straight chain.
* *	* * * * *
PP	Chlorinated paraffins (C14–C17), with more than 1% shorter chain length.
* *	* * * * *
	1-Chloro-2,3-Epoxypropane.
* *	* * * * *
PP	Copper sulphate, anhydrous, hydrates.
* *	* * * * *
	Dichlorodimethyl ether, symmetrical.
* *	* * * * *
	Isobutyl aldehyde.
	Isobutyraldehyde.
* *	* * * * *
	Maneb.

S.M.P (1)	Marine pollutant (2)
* * * * * * *	
	Maneb preparation, stabilized against self-heating.
* * * * * * *	
PP	N,N-Dimethyldodecylamine.
* * * * * * *	
	Nitrotoluenes (ortho-; meta-; para-), solid.
* * * * * * *	
	normal-heptaldehyde.
* * * * * * *	
	Potassium cyanide, solution.
* * * * * * *	
	Sodium cyanide, solution.
* * * * * * *	
	Triphenyl phosphate/tert-butylated triphenyl phosphates mixtures containing 5% to 10% triphenyl phosphates.
PP	Triphenyl phosphate/tert-butylated triphenyl phosphates mixtures containing 10% to 48% triphenyl phosphates.
* * * * * * *	

§ 172.101 Appendix B [Amended]

16. In addition, in Appendix B to § 172.101, the List of Marine Pollutants, the following changes are made:

a. In column (1), the designation ''PP'' is added for the following entries:

''Azinphos-methyl.''
''Cupric chloride''
''Cuprous chloride''
''Furathiocarb (ISO)''
''Osmium tetroxide''
''Triphenylphosphate''

b. In column (1), the designation ''PP'' is removed for the entry ''Silver orthoarsenite''.

c. In column (2), the following language is revised to read as follows:

''Alcohol C-12–C–15 poly(1-3) ethoxylate'' is revised to read ''Alcohol C-12–C-16 poly(1-6) ethoxylate''.

''Alkylphenols, liquid, n.o.s. (*including C2-C8 homologues*)'' is revised to read ''Alkylphenols, liquid, n.o.s. (including C2-C12 homologues)''.

''Alkylphenols, solid, n.o.s. (*including C2-C8 homologues*)'' is revised to read ''Alkylphenols, solid, n.o.s. (*including C-2–C-12 homologues*)''.

''2-Butenal, inhibited'' is revised to read ''2-Butenal, stabilized''.

''Chlorodinitrobenzenes'' is revised to read ''Chlorodinitrobenzenes, liquid or solid''.

''Chlorophenates, liquid'' is revised to read ''Chlorophenolates, liquid''.

''Chlorophenates, solid'' is revised to read ''Chlorophenolates, solid''.

''Chlorotoluenes'' is revised to read ''Chlorotoluenes (ortho-,meta-,para-)''.

''Crotonaldehyde, inhibited'' is revised to read ''Crotonaldehyde, stabilized''.

''Crotonic aldehyde'' is revised to read ''Crotonic aldehyde, stabilized''.

''Decyloxytetrahydrothiophene dioxide'' is revised to read ''Decycloxytetrahydrothiophene dioxide''.

''Dichloroethyl ether'' is revised to read ''Di-(2-chloroethyl) ether''.

''Dodecylamine'' is revised to read ''1-Dodecylamine''.

''Hydrocyanic acid, anhydrous, stabilized'' is revised to read ''Hydrocyanic acid, anhydrous, stabilized, containing less than 3% water''.

''Hydrocyanic acid, anhydrous, stabilized, absorbed in a porous inert material'' is revised to read ''Hydrocyanic acid, anhydrous, stabilized, containing less than 3% water and absorbed in a porous inert material''.

''Isobutybenzene'' is revised to read ''Isobutylbenzene''.

''Maneb *or* Maneb preparations *with not less than 60 per cent maneb*'' is revised to read ''Maneb preparations *with not less than 60% maneb*''.

''Mercarbam'' is revised to read ''Mecarbam''.

''Mercurous bisuphate'' is revised to read ''Mercurous bisulphate''.

''Mercury based pesticides, liquid, flammable, toxic, n.o.s.'' is revised to read ''Mercury based pesticide, liquid, flammable, toxic''.

''Mercury based pesticides, liquid, toxic, flammable, n.o.s.'' is revised to read ''Mercury based pesticide, liquid, toxic, flammable''.

''Mercury based pesticides, liquid, toxic, n.o.s.'' is revised to read ''Mercury based pesticide, liquid, toxic''.

''Mercury based pesticides, solid, toxic, n.o.s.'' is revised to read ''Mercury based pesticide, solid, toxic''.

''3-Methylacroleine, inhibited'' is revised to read ''3-Methylacrolein, stabilized''.

''Nitrobenzotrifluorides'' is revised to read ''Nitrobenzotrifluorides, liquid or solid''.

''Nitrotolueunes (o-;m;-p-)'' is revised to read ''Nitrotoluenes (ortho-;meta-;para-), liquid''.

''Nitroxyluenes, (o-;m-;p-)'' is revised to read ''Nitroxylenes, liquid or solid''.

''Potassium cyanide'' is revised to read ''Potassium cyanide, solid''.

''Potassium cyanocuprate I'' is revised to read ''Potassium cyanocuprate (I)''.

''Sodium cyanide'' is revised to read ''Sodium cyanide, solid''.

''Tetrachloroethane'' is revised to read ''1,1,2,2-Tetrachloroethane''.

''Tetramethylbenzenes'' is revised to read ''n-Tetramethylbenzenes''.

''Tricresyl phosphate (*not less than 1% ortho-isomer*)'' is revised to read ''Tricresyl phosphate, not less than 1% ortho-isomer but not more than 3% orthoisomer''.

''White phosphorus, molten'' is revised to read ''Phosphorus, white, molten''.

''Yellow phosphorus, molten'' is revised to read ''Phosphorus, yellow, molten''.

d. The entries, as amended, are placed in alphabetical order.

17. In § 172.102, in paragraph (c)(1), Special Provision 43 is amended by adding a sentence at the end, Special Provisions 129, 130, 131, 132, 133, 134, 135, 136, 137 and 138 are added; in paragraph (c)(2), Special Provision A35 is added; and in paragraph (c)(3), Special Provision B101 is revised to read as follows:

§ 172.102 Special provisions.

* * * * *

(c) * * *

(1) * * *

Code/Special Provisions

* * * * *

43. * * * Nitrocellulose membrane filters covered by this entry, each with a mass not exceeding 0.5 g, are not subject to the requirements of this subchapter when contained individually in an article or a sealed packet.

* * * * *

129. These materials may not be classified and transported unless authorized by the Associate Administrator for Hazardous Materials Safety on the basis of results from Series 2 Test and a Series 6(c) Test from the UN Manual of Tests and Criteria on packages as prepared for transport. The packing group assignment and packaging must be approved by the Associate Administrator for Hazardous Materials Safety on the basis of the criteria in § 173.21 of this subchapter and the package type used for the Series 6(c) test.

130. Batteries, dry are not subject to the requirements of this subchapter only when they are offered for transportation in a manner that prevents the dangerous evolution of heat (for example, by the effective insulation of exposed terminals).

131. This material may not be offered for transportation unless approved by the Associate Administrator for Hazardous Materials Safety.

132. Ammonium nitrate fertilizers of this composition are not subject to the requirements of this subchapter if shown by a trough test (see United Nations Recommendations on the Transport of Dangerous Goods, Manual Tests and Criteria, Part III, sub-section 38.2) not to be liable to self-sustaining decomposition and provided that they do not contain an excess of nitrate greater than 10% by mass (calculated as potassium nitrate).

133. This description applies to articles which are used as life-saving vehicle air bag inflators or air bag modules or seat-belt pretensioners, containing a gas or a mixture of compressed gases classified under Division 2.2, and with or without small quantities of pyrotechnic material. For units with pyrotechnic material, initiated explosive effects must be contained within the pressure vessel (cylinder) such that the unit may be excluded from Class 1 in accordance with paragraphs 1.11(b) and 16.6.1.4.7(a)(ii) of the UN Manual of Tests and Criteria, Part 1. In addition, units must be designed or packaged for transport so that when engulfed in a fire there will be no fragmentation of the pressure vessel or projection hazard. This may be determined by analysis or test. The pressure vessel must be in conformance with the requirements of this subchapter for the gas(es) contained in the pressure vessel or as specifically authorized by the Associate Administrator for Hazardous Materials Safety.

134. This entry only applies to vehicles, machinery and equipment which are powered by wet batteries or sodium batteries and which are transported with these batteries installed. Examples of such items are electrically-powered cars, lawn mowers, wheelchairs and other mobility aids. Self-propelled vehicles which also contain an internal combustion engine must be consigned under the entry ''Vehicle, flammable gas powered'' or ''Vehicle, flammable liquid powered'', as appropriate.

135. The entries ''Vehicle, flammable gas powered'' or ''Vehicle, flammable liquid powered'', as appropriate, must be used when internal combustion engines are installed in a vehicle.

136. This entry only applies to machinery and apparatus containing hazardous materials as an integral element of the machinery or apparatus. It may not be used to describe machinery or apparatus for which a proper shipping name exists in the § 172.101 Table. Machinery or apparatus may only contain hazardous materials for which exceptions are referenced in Column 8 of the § 172.101 Table and are provided in Part 173, Subpart D, of this subchapter. Hazardous materials shipped under this entry are excepted from the labeling requirements of this subchapter unless offered for transportation or transported by aircraft. For transportation by aircraft, the machinery or apparatus must be labeled according to each of the hazardous materials contained in the machinery or apparatus. This includes the primary hazard label and any applicable subsidiary risk labels, except that a subsidiary risk label is not required for any subsidiary hazard already indicated by the primary or subsidiary hazard label applied for another substance in the machinery or apparatus. Orientation markings as prescribed in § 172.312 are required only when necessary to ensure that liquid hazardous materials remain in their intended orientation. The machinery or apparatus or the packagings in which they are contained shall be marked ''Dangerous goods in machinery'' or ''Dangerous goods in apparatus'', as appropriate, and with the appropriate identification number. For transportation by aircraft, machinery or apparatus may not contain any material forbidden for transportation by passenger aircraft. Hazardous materials in machinery or apparatus are not subject to the placarding requirements of subpart F of this part. The Associate Administrator for Hazardous Materials Safety may except from the requirements of this subchapter equipment, machinery and apparatus provided:

a. It is shown that it does not pose a significant risk in transportation;

b. The quantities of hazardous materials do not exceed those specified in § 173.4 of this subchapter for the applicable class(es) of hazardous materials contained in § 173.4 of this subchapter; and

c. The equipment, machinery or apparatus conforms with § 173.222 of this subchapter.

137. Cotton, dry is not subject to the requirements of this subchapter when it is baled in accordance with ISO 8115, ''Cotton Bales—Dimensions and Density'' to a density of at least 360 kg/m^3 (22.4lb/ft^3) and it is transported in a freight container or closed transport vehicle.

138. Lead compounds which, when mixed in a ratio of 1:1000 with 0.07M (Molar concentration) hydrochloric acid and stirred for one hour at a temperature of 23°C ± 2°C, exhibit a solubility of 5% or less are considered insoluble.

(2) * * *

Code/Special Provisions

* * * * *

A35. This includes any material which is not covered by any of the other classes but which has an anesthetic, narcotic, noxious or other similar properties such that, in the event of spillage or leakage on an aircraft, extreme annoyance or discomfort could be caused to crew members so as to prevent the correct performance of assigned duties.

* * * * *

(3) * * *

Code/Special Provisions

* * * * *

B101. When intermediate bulk containers are used, only those constructed of metal are authorized.

* * * * *

§ 172.102 [Amended]

18. In addition, in § 172.102, the following changes are made:

a. In paragraph (c)(1), Special Provision 17 is removed.

b. In paragraph (c)(1), Special Provision 20 is removed.

c. In paragraph (c)(1), Special Provision 104 is removed.

d. In paragraph (c)(1), under Special Provision 125, in the fourth sentence, the wording ''at least 90%'' is removed and ''at least 98%'' is added in its place; and in the last sentence, the wording ''less than 98%'' is removed and ''less than 90%'' is added in its place.

e. In paragraph (c)(5), Special Provision N9 is removed.

§ 172.203 [Amended]

19. In § 172.203, the following changes are made:

a. In paragraph (k) introductory text, in the first sentence, the wording ''listed in paragraph (k)(3) of this section'' is removed and ''identified by the letter ''G'' in Column (1) of the § 172.101 Table'' is added in its place.

b. In paragraph (k)(1), in the first sentence, the wording ''listed herein'' is

removed and ''identified by the letter ''G'' in Column (1) of the § 172.101 Table'' is added in its place.

c. In addition, paragraph (k)(3) is removed and paragraph (k) (4) is redesignated as new paragraph (k)(3).

20. In § 172.313, a new paragraph (d) is added to read as follows:

§ 172.313 Poisonous hazardous materials.

* * * * *

(d) For a packaging containing a Division 6.1 PG III material, ''PG III'' may be marked adjacent to the POISON label. (See § 172.405(c).)

§ 172.400 [Amended]

21. In § 172.400, in the table in paragraph (b), the following changes are made:

a. In column 1, the language ''6.1 (PG I or II, other than Zone A or B inhalation hazard)'' is revised to read ''6.1 (other than inhalation hazard, Zone A or B)''.

b. The entry ''6.1 (PG III)'' is removed.

§ 172.400a [Amended]

22. In § 172.400a, paragraph (d) is removed.

23. In § 172.405, a new paragraph (c) is added to read as follows:

§ 172.405 Authorized label modifications.

* * * * *

(c) For a package containing a Division 6.1, Packing Group III material, the POISON label specified in § 172.430 may be modified to display the text ''PG III'' instead of ''POISON'' or ''TOXIC'' below the mid line of the label. Also see § 172.313(d).

24. In § 172.407, paragraph (c)(4) is revised to read as follows:

§ 172.407 Label specifications.

* * * * *

(c) * * *

(4) When text indicating a hazard is displayed on a label, the label name must be shown in letters measuring at least 7.6 mm (0.3 inches) in height. For SPONTANEOUSLY COMBUSTIBLE or DANGEROUS WHEN WET labels, the words ''Spontaneously'' and ''When Wet'' must be shown in letters measuring at least 5.1 mm (0.2 inches) in height.

* * * * *

§ 172.431 [Removed and Reserved]

25. Section 172.431 is removed and reserved.

26. In § 172.504, paragraph (f)(10) is revised to read as follows:

§ 172.504 General placarding requirements.

* * * * *

(f) * * *

(10) For Division 6.1, PG III materials, a POISON placard may be modified to display the text ''PG III'' below the mid line of the placard.

* * * * *

§ 172.504 [Amended]

27. In § 172.504, in paragraph (e), in Table 2, the following changes are made:

a. In column 2, the language ''6.1 (PG I or II, other than Zone A or B inhalation hazard)'' is revised to read ''6.1 (other than inhalation hazard, Zone A or B)''.

b. The entry ''6.1 (PG III)'' is removed.

§ 172.553 [Removed and Reserved]

28. Section 172.553 is removed and reserved.

PART 173—SHIPPERS—GENERAL REQUIREMENTS FOR SHIPMENTS AND PACKAGINGS

29. The authority citation for part 173 continues to read as follows:

Authority: 49 U.S.C. 5101–5127, 44701; 49 CFR 1.45, 1.53.

§ 173.1 [Amended]

30. In § 173.1, in paragraph (d), in the first sentence, the wording ''Recommendations of the United Nations Committee of Experts on the Transport of Dangerous Goods'' is removed and ''UN Recommendations'' is added in its place.

§ 173.2a [Amended]

31. In § 173.2a, paragraph (b), Precedence of Hazard Table, in column 13, under the column heading ''8, II liquid'', the following changes are made:

a. For the entry, ''4.3 II'', the numeral ''8'' is removed and ''4.3'' is added in its place.

b. For the entry, ''5.1 II'', the numeral ''8'' is removed and ''5.1'' is added in its place.

32. In § 173.25, the section heading and paragraph (b) are revised to read as follows:

§ 173.25 Authorized packagings and overpacks.

* * * * *

(b) Shrink-wrapped or stretch-wrapped trays may be used as outer packagings for inner packagings prepared in accordance with the limited quantity provisions or consumer commodity provisions of this subchapter, provided that—

(1) Inner packagings are not fragile, liable to break or be easily punctured, such as those made of glass, porcelain, stoneware or certain plastics; and

(2) Each complete package does not exceed 20 kg (44 lbs) gross weight.

* * * * *

33. In § 173.28, paragraph (c)(2) is revised and a new paragraph (c)(5) is added to read as follows:

§ 173.28 Reuse, reconditioning and remanufacture of packagings.

* * * * *

(c) * * *

(2) For the purpose of this subchapter, reconditioning of a non-bulk packaging other than a metal drum includes:

(i) Removal of all former contents, external coatings and labels, and cleaning to the original materials of construction;

(ii) Inspection after cleaning with rejection of packagings with visible damage such as tears, creases or cracks, or damaged threads or closures, or other significant defects;

(iii) Replacement of all non-integral gaskets and closure devices with new or refurbished parts, and cushioning and cushioning materials; and components including gaskets, closure devices and cushioning and cushioning material; and

(iv) Ensuring that the packagings are restored to a condition that conforms in all respects with the prescribed requirements of this subchapter.

* * * * *

(5) Packagings which have significant defects which cannot be repaired may not be reused.

* * * * *

34. In § 173.29, paragraph (b)(2)(iv)(B) is revised to read as follows:

§ 173.29 Empty packagings.

* * * * *

(b) * * *

(2) * * *

(iv) * * *

(B) A Division 2.2 non-flammable gas, other than ammonia, anhydrous, and with no subsidiary hazard, at an absolute pressure less than 280 kPa (40.6 psia); at 20° C (68° F); and

* * * * *

35. In § 173.32b, in paragraph (b)(1), the semicolon is removed and a period is added in its place and a new sentence is added at the end of the paragraph to read as follows:

§ 173.32b Periodic testing and inspection of Specification IM portable tanks.

* * * * *

(b) * * *

(1) * * * The two and one-half year internal inspection may be waived for portable tanks dedicated to the transportation of a single hazardous material if it is leakproofness tested prior to each filling, or if approved by the Associate Administrator for Hazardous Materials Safety.

* * * * *

§ 173.32b [Amended]

36. In addition, in § 173.32b, in paragraph (b)(2), the semicolon at the

end is removed and a period is added in its place.

37. In § 173.32c, paragraph (j) is revised to read as follows:

§ 173.32c Use of Specification IM portable tanks.

* * * * *

(j) Except for a non-flowable solid or a liquid with a viscosity of 2,680 centistokes (millimeters squared per second) or greater at 20°C, an IM portable tank or compartment thereof having a volume greater than 7,500 L (1,980 gallons) may be loaded to a filling density of more than 20% and less than 80% by volume. If a portable tank is divided by partitions or surge plates into compartments of not more than 7,500 L capacity, this filling restriction does not apply.

* * * * *

38. In § 173.34, in the paragraph (e) table, the following changes are made:

a. In Column 1, in the last entry, footnote reference [4] is added immediately after the wording ''(see § 173.301(j) for restrictions on use).''.

b. A new footnote is added at the end of the table to read as follows: [4] For CTC cylinders, see § 173.301(i). The retest period for CTC cylinders authorized under § 173.301(i) is the period specified in the table for the corresponding DOT specification cylinder.''.

39. In § 173.35, the section heading and paragraph (b) are revised to read as follows:

§ 173.35 Hazardous materials in intermediate bulk containers (IBCs).

* * * * *

(b) Initial use and reuse of IBCs. An IBC other than a multiwall paper IBC (13M1 and 13M2) may be reused. If an inner liner is required, the inner liner must be replaced before each reuse. Before an IBC is filled and offered for transportation, the IBC and its service equipment must be given an external visual inspection, by the person filling the IBC, to ensure that:

(1) The IBC is free from corrosion, contamination, cracks, cuts, or other damage which would render it unable to pass the prescribed design type test to which it is certified and marked; and

(2) The IBC is marked in accordance with requirements in § 178.703 of this subchapter. Additional marking allowed for each design type may be present. Required markings that are missing, damaged or difficult to read must be restored or returned to original condition.

* * * * *

§ 173.56 [Amended]

40. In § 173.56, in paragraph (b)(2)(i), the wording ''(TB 700–2, dated December 1989)'' is removed and ''(TB 700–2)'' is added in its place; and in paragraph (b)(3)(i), the wording ''(TB 700–2, dated December 1989)'' is removed and ''(TB 700–2)'' is added in its place.

§ 173.59 [Amended]

41. In § 173.59, for the definitions *''Charges, explosive, commercial without detonator'' and ''Charges, shaped commercial, without detonator''*, the word ''commercial'' is removed each place it appears.

42. In § 173.121, paragraph (b)(1)(ii) is revised to read as follows:

§ 173.121 Class 3—Assignment of packing group.

* * * * *

(b) * * *

(1) * * *

(ii) The mixture does not contain any substances with a primary or a subsidiary risk of Division 6.1 or Class 8;

* * * * *

§ 173.159 [Amended]

43. In § 173.159, in paragraph (g)(2), in the first sentence immediately following the wording ''may be packed in strong'', the words ''plywood or wooden boxes'' are removed and ''rigid outer packagings'' is added in its place.

44. Section 173.162 is revised to read as follows:

§ 173.162 Gallium.

(a) Except when packaged in cylinders or steel flasks, gallium must be packaged in packagings which meet the requirements of part 178 of this subchapter at the Packing Group I performance level for transport by aircraft and the Packing Group III performance level for transport by highway, rail or vessel.

(1) In packagings intended to contain liquids consisting of glass, earthenware or rigid plastics with a maximum net mass of 10 kg (22 pounds) each. The inner packagings must be packed in wooden boxes (4C1, 4C2, 4D, 4F), fiberboard boxes (4G), plastics boxes (4H1, 4H2), fiber drums (1G) or removable head steel and plastic drums or jerricans (1A2, 1H2, 3A2 or 3H2) with sufficient cushioning material to prevent breakage. Either the inner packagings or the outer packagings must have inner liners or bags of strong leakproof and puncture-resistant material impervious to the contents and completely surrounding the contents to prevent it from escaping from the package, irrespective of its position.

(2) In packagings intended to contain liquids consisting of semi-rigid plastic inner packagings of not more than 2.5 kg (5.5 pounds) net capacity each, individually enclosed in a sealed, leak-tight bag of strong puncture-resistant material. The sealed bags must be packed in wooden (4C1, 4C2), plywood (4D), reconstituted wood (4F), fiberboard (4G) or plastic (4H1, 4H2) boxes or in fiber (1G) or steel (1A2) drums, which are lined with leak-tight, puncture-resistant material. Bags and liner material must be chemically resistant to gallium.

(3) Cylinders and steel flasks with vaulted bottoms are also authorized.

(b) When it is necessary to transport gallium at low temperatures in order to maintain it in a completely solid state, the above packagings may be overpacked in a strong, water-resistant outer packaging which contains dry ice or other means of refrigeration. If a refrigerant is used, all of the above materials used in the packaging of gallium must be chemically and physically resistant to the refrigerant and must have impact resistance at the low temperatures of the refrigerant employed. If dry ice is used, the outer packaging must permit the release of carbon dioxide gas.

(c) Manufactured articles or apparatuses, each containing not more than 100 mg (0.0035 ounce) of gallium and packaged so that the quantity of gallium per package does not exceed 1 g (0.35 ounce) are not subject to the requirements of this subchapter.

45. In § 173.164, paragraphs (a)(1) through (a)(3) are revised and paragraph (a)(4) is added to read as follows:

§ 173.164 Mercury (metallic and articles containing mercury).

(a) * * *

(1) In inner packagings of earthenware, glass or plastic containing not more than 3.5 kg (7.7 pounds) of mercury, or inner packagings which are glass ampoules containing not more than 0.5 kg (1.1 pounds) of mercury, or iron or steel quicksilver flasks containing not more than 35 kg (77 pounds) of mercury. The inner packagings or flasks must be packed in steel drums (1A2), steel jerricans (3A2), wooden boxes (4C1), (4C2), plywood boxes (4D), reconstituted wood boxes (4F), fiberboard boxes (4G), plastic boxes (4H2), plywood drums (1D) or fiber drums (1G).

(2) Packagings must meet the requirements of Part 178 of this subchapter at the Packing Group I performance level.

(3) When inner packagings of earthenware, glass or plastic are used,

they must be packed in the outer packaging with sufficient cushioning material to prevent breakage.

(4) Either the inner packagings or the outer packagings must have inner linings or bags of strong leakproof and puncture-resistant material impervious to mercury, completely surrounding the contents, so that the escape of mercury will be prevented irrespective of the position of the package.

* * * * *

§ 173.164 [Amended]

46. In addition, in § 173.164, in paragraph (c) introductory text, the wording ''not more than 100 mg (0.0035 ounce)'' is removed.

47. In § 173.166, in paragraph (c), the last sentence is revised to read as follows:

§ 173.166 Air bag inflators, air bag modules and seat-belt pretensioners.

* * * * *

(c) * * * Marking the EX number or product code on the outside package is not required.

* * * * *

§ 173.166 [Amended]

48. In addition, in § 173.166, the following changes are made:

a. In paragraph (a), in the first sentence, the wording ''a booster material and a gas generant'' is removed and ''a booster material, a gas generant and, in some cases, a pressure vessel (cylinder)'' is added in its place.

b. In paragraph (b) introductory text, the wording ''as Class 9 only'' is removed and ''as Class 9 (UN3268) or Division 2.2 (UN3353)'' is added in its place.

c. In paragraph (b)(2), the wording ''second revised edition, 1995'' is removed.

d. In paragraph (b)(3)(ii), the wording ''as Class 9'' is removed and ''as Class 9 or Division 2.2'' is added in its place.

e. In paragraph (c), in the second sentence, the wording ''to the inflator'' is removed and ''to the inflator, module'' is added in its place.

f. In paragraph (f), in the first sentence, the wording ''or NON-FLAMMABLE GAS'' is added immediately following the wording ''CLASS 9''.

§ 173.196 [Amended]

49. In § 173.196, paragraph (a)(1)(iii), in the first sentence, the wording ''An absorbent material'' is removed and ''When the primary receptacle contains liquids, an absorbent material'' is added in its place.

50. Section 173.220 is revised to read as follows:

§ 173.220 Internal combustion engines, self-propelled vehicles, mechanical equipment containing internal combustion engines, and battery powered vehicles or equipment.

(a) *Applicability.* An internal combustion engine, self-propelled vehicle, mechanized equipment containing an internal combustion engine, or a battery powered vehicle or equipment is subject to the requirements of this subchapter when transported as cargo on a transport vehicle, vessel, or aircraft if—

(1) The engine or fuel tank contains a liquid or gaseous fuel. An engine may be considered as not containing fuel when the fuel tank, engine components, and fuel lines have been completely drained, sufficiently cleaned of residue, and purged of vapors to remove any potential hazard and the engine when held in any orientation will not release any liquid fuel;

(2) It is equipped with a wet electric storage battery other than a non-spillable battery; or

(3) Except as provided in paragraph (d)(1) of this section, it contains other hazardous materials subject to the requirements of this subchapter.

(b) *Requirements.* Unless otherwise excepted in paragraph (b)(4) of this section, vehicles, engines and equipment are subject to the following requirements:

(1) *Flammable liquid fuel.* A fuel tank containing a flammable liquid fuel must be drained and securely closed, except that up to 500 ml (17 ounces) of residual fuel may remain in the tank, engine components, or fuel lines provided they are securely closed to prevent leakage of fuel during transportation. Self-propelled vehicles containing diesel fuel are excepted from the requirement to drain the fuel tanks, provided that sufficient ullage space has been left inside the tank to allow fuel expansion without leakage, and the tank caps are securely closed.

(2) *Flammable liquefied or compressed gas fuel.* Fuel tanks and fuel systems containing flammable liquefied or compressed gas fuel must be securely closed. For transportation by water, the requirements of § 176.78(k) and 176.905 of this subchapter apply. For transportation by air, the fuel tank and fuel system must be emptied and securely closed or must be removed, packaged and transported in accordance the requirements of this subchapter.

(3) *Truck bodies or trailers on flat cars—flammable liquid or gas powered.* Truck bodies or trailers with automatic heating or refrigerating equipment of the flammable liquid type may be shipped with fuel tanks filled and equipment operating or inoperative, when used for the transportation of other freight and loaded on flat cars as part of a joint rail and highway movement, provided the equipment and fuel supply conform to the requirements of § 177.834(l) of this subchapter.

(4) *Modal exceptions.* Quantities of flammable liquid fuel greater than 500 ml (17 ounces) may remain in self-propelled vehicles and mechanical equipment only under the following conditions:

(i) For transportation by motor vehicle or rail car, the fuel tanks must be securely closed.

(ii) For transportation by vessel, the shipment must conform to § 176.905 of this subchapter.

(iii) For transportation by aircraft designed or modified for vehicle ferry operations, the shipment must conform to § 175.305 of this subchapter.

(c) *Wet battery powered or installed.* Wet batteries must be securely installed and fastened in an upright position. Batteries must be protected against short circuits and leakage or removed and packaged separately under § 173.159. Battery powered vehicles, machinery or equipment including battery powered wheelchairs and mobility aids are excepted from the requirements of this subchapter when transported by rail, highway or vessel.

(d) *Other hazardous materials.* (1) Items of equipment containing hazardous materials, fire extinguishers, compressed gas accumulators, safety devices and other hazardous materials which are integral components of the motor vehicle, engine or mechanical equipment and are necessary for the operation of the vehicle, engine or equipment, or for the safety of its operator or passengers must be securely installed in the motor vehicle, engine or mechanical equipment. Such items are not otherwise subject to the requirements of this subchapter.

(2) Other hazardous materials must be packaged and transported in accordance with the requirements of this subchapter.

(e) *Exceptions.* Except as provided in paragraph (d)(2) of this section, shipments made under the provisions of this section—

(1) Are not subject to any other requirements of this subchapter, for transportation by motor vehicle or rail car; and

(2) Are not subject to the requirements of subparts D, E and F (marking, labeling and placarding, respectively) of part 172 of this subchapter or § 172.604 of this subchapter (emergency response telephone number) for transportation by vessel or aircraft. For transportation by

aircraft, all other applicable requirements of this subchapter, including shipping papers, emergency response information, notification of pilot-in-command, general packaging requirements, and the requirements specified in § 173.27 must be met. For transportation by vessel, additional exceptions are specified in § 176.905 of this subchapter.

51. Section 173.221 is revised to read as follows:

§ 173.221 Polymeric beads, expandable and Plastic molding compound.

(a) Non-bulk shipments of Polymeric beads (or granules), expandable, *evolving flammable vapor* and Plastic molding compound *in dough, sheet or extruded rope form, evolving flammable vapor* must be packed in: wooden (4C1 or 4C2), plywood (4D), fiberboard (4G), reconstituted wood (4F) boxes, plywood drums (1D) or fiber drums (1G) with sealed inner plastic liners; in vapor tight metal or plastic drums (1A1, 1A2, 1B1, 1B2, 1H1 or 1H2); or packed in non-specification packagings when transported in dedicated vehicles or freight containers. The packagings need not conform to the requirements for package testing in part 178 of this subchapter, but must be capable of containing any evolving gases from the contents during normal conditions of transportation.

(b) Bulk shipments of Polymeric beads (or granules), expandable, *evolving flammable vapor* or Plastic molding compounds *in dough, sheet or extruded rope, evolving flammable vapor* may be packed in non-specification bulk packagings. Except for transportation by highway and rail, bulk packagings must be capable of containing any gases evolving from the contents during normal conditions of transportation.

52. Section 173.222 is revised to read as follows:

§ 173.222 Dangerous goods in equipment, machinery or apparatus.

Hazardous materials in machinery or apparatus are excepted from the specification packaging requirements of this subchapter when packaged according to this section. Hazardous materials in machinery or apparatus must be packaged in strong outer packagings, unless the receptacles containing the hazardous materials are afforded adequate protection by the construction of the machinery or apparatus. Each package must conform to the packaging requirements of subpart B of this part, except for the requirements in §§ 173.24(a)(1) and 173.27(e), and the following requirements:

(a) If the equipment, machinery or apparatus contains more than one hazardous material, the materials must not be capable of reacting dangerously together.

(b) The nature of the containment must be as follows—

(1) Damage to the receptacles containing the hazardous materials during transport is unlikely. However, in the event of damage to the receptacles containing the hazardous materials, no leakage of the hazardous materials from the equipment, machinery or apparatus is possible. A leakproof liner may be used to satisfy this requirement.

(2) Receptacles containing hazardous materials must be secured and cushioned so as to prevent their breakage or leakage and so as to control their movement within the equipment, machinery or apparatus during normal conditions of transportation. Cushioning material must not react dangerously with the content of the receptacles. Any leakage of the contents must not substantially impair the protective properties of the cushioning material.

(3) Receptacles for gases, their contents and filling densities must conform to the applicable requirements of this subchapter, unless otherwise approved by the Associate Administrator for Hazardous Materials Safety.

(c) For transportation by aircraft, the total net quantity of hazardous materials contained in one item of equipment, machinery or apparatus must not exceed the following:

(1) 1 kg (2.2 pounds) in the case of solids;

(2) 0.5 L (0.3 gallons) in the case of liquids;

(3) 0.5 kg (1.1 pounds) in the case of Division 2.2 gases; and

(4) A total quantity of not more than the aggregate of that permitted in paragraphs (c)(1) through (c)(3) of this section, for each category of material in the package, when a package contains hazardous materials in two or more of the categories in paragraphs (c)(1) through (c)(3) of this section and is offered for transportation by aircraft.

(d) When a package contains hazardous materials in two or more of the categories listed in paragraphs (c)(1) through (c)(3) of this section, the total quantity required by § 172.202(c) of this subchapter to be entered on the shipping paper, must be the aggregate quantity of all hazardous materials, expressed as net mass.

§ 173.224 [Amended]

53. In § 173.224, in the introductory text of paragraph (c)(3), the word ''product'' is added immediately before the word ''evaluation''.

54. In § 173.225, in paragraph (b), in the Organic Peroxides Table, entries are removed or added in the appropriate alphabetical order, to read as follows:

§ 173.225 Packaging requirements and other provisions for organic peroxides.

* * * * *

(b) * * *

ORGANIC PEROXIDE TABLE

Technical name	ID number	Concentration (mass %)	Diluent Mass (%)			Water (mass %)	Packing method	Temperature (°C)		Note
			A	B	I			Control	Emergency	
(1)	(2)	(3)	(4a)	(4b)	(4c)	(5)	(6)	(7a)	(7b)	(8)
[REMOVE:]										
*	*		*	*		*		*	*	
Dibenzoyl peroxide [as a paste]	Exempt	≤50	≥14			≥18	Exempt			
*	*		*	*		*		*	*	
[ADD:]										
*	*		*	*		*		*	*	
Isopropyl sec-butyl peroxydicarbonate [and] Di-sec-butyl peroxydi-carbonate [and] Di-isopropyl peroxydicarbonate.	UN3115	≤32 + ≤15–18 + ≤12–15	≥38				OP7	−20	−10	

ORGANIC PEROXIDE TABLE—Continued

Technical name	ID number	Concentration (mass %)	Diluent Mass (%)			Water (mass %)	Packing method	Temperature (°C)		Note
			A	B	I			Control	Emergency	
(1)	(2)	(3)	(4a)	(4b)	(4c)	(5)	(6)	(7a)	(7b)	(8)
*	*		*	*		*	*	*	*	

* * * * *

§ 173.225 [Amended]

55. In addition, in § 173.225, in paragraph (b), in the Organic Peroxides Table, the following changes are made:

a. For the entry, ''tert-Butyl cumyl peroxide'' (UN3106), in Column (4b), the reference ''≥58'' is removed and in Column (4c), ''≥58'' is added.

b. For the entry, ''tert-Butyl hydroperoxide'' (UN3105), in Column (7b), the reference ''4, 13'' is removed and in Column (8), ''4, 13'' is added.

c. For the entry, ''tert-Butyl monoperoxymaleate [as a paste]'' (UN3108), in Column (3), the reference ''≥52'' is revised to read ''≤52''.

d. For the entry, ''tert-Butyl monoperoxymaleate [as a paste]'' (UN3110), in Column (3), the reference ''≥42'' is revised to read ''≤42''.

e. For the entry, ''tert-Butyl peroxyacetate'' (UN3109), in Column (3), the reference ''≥32'' is revised to read ''≤32''.

f. For the entry, ''tert-Butyl peroxyacetate'' (UN3119), in Column (3), the reference ''≥32'' is revised to read ''≤32''.

g. For the entry, ''tert-Butyl peroxyacetate'' (UN3109), in Column (3), the reference ''≥22'' is revised to read ''≤22''.

h. For the entry, ''tert-Butyl peroxybenzoate'' (UN3103), in Column (4a), the reference ''≥23'' is revised to read ''≤23''.

i. For the entry, ''tert-Butyl peroxybenzoate'' (UN3105), in Column (3), the reference ''<52–77'' is revised to read ''>52–77''.

j. For the entry, ''tert-Butyl peroxy-2-ethylhexanoate'' (UN3117), in Column (3), the reference ''≤52'' is revised to read ''>32–52''.

k. For the first entry for, ''tert-Butyl peroxy-2-ethylhexanoate'' (UN3119), in Column (6), the reference ''1BC'' is revised to read ''IBC''.

l. For the entry, ''Cumyl hydroperoxide'' (UN3109), in Column (3), the reference ''≥90'' is revised to read ''≤90''.

m. For the entry, ''1,1-Di-(tert-butylperoxy)cyclohexane'' (UN3103), in Column (4a), the reference ''≤20'' is revised to read ''≥20''.

n. For the entry, ''Di-n-butyl peroxydicarbonate'' (UN3115), in Column (7b), the reference ''5'' is revised to read ''-5''.

o. For the entry, ''Diethyl peroxydicarbonate'' (UN3115), in Column (7a), the reference ''>10'' is revised to read ''-10''.

p. For the entry, ''2,5-Dimethyl-2,5-di-(tert-butylperoxy)hexyne-3'' (UN3103), in Column (4a), the reference ''≥14'' is added.

q. For the entry, ''2,5-Dimethyl-2,5-dihydroperoxyhexane'' (UN3104), Column (7a), the reference ''OP6'' is removed and in Column (6), ''OP7'' is added.

r. For the entry, ''1,1-Dimethyl-3-hydroxybutylperoxyneoheptanoate'' (UN3117), in Column (4b), the reference ''≥48'' would be removed and in Column (4a), ''≥48'' is added.

s. For the entry, ''3,3,6,6,9,9-Hexamethyl-1,2,4,5-tetraoxacyclononane'' (UN3106), in Column (4b), the reference ''≥48'' is removed; in Column (4c), ''≥48'' is added; in Column (5), the reference ''OP7'' is removed; and, in Column (6) ''OP7'' is added.

t. For the entry, ''Peroxyacetic acid, type F, stabilized'' (UN3109), in Column (8), the reference ''13, 20'' is removed and ''7, 13, 20'' is added in its place.

u. For the entry, ''Pinanyl hydroperoxide'' (UN3105), in Column (3), the reference ''≥56–100'' is revised to read ''56–100''.

56. In § 173.225, in paragraph (c)(2), the word ''product'' is added immediately before the word ''evaluation''.

57. In § 173.243, in paragraph (e)(2), the period at the end of the paragraph is revised to read ''; or'' and a new paragraph (e)(3) is added to read as follows:

§ 173.243 Bulk packaging for certain high hazard liquids and dual hazard materials which pose a moderate hazard.

* * * * *

(e) * * *

(3) The subsidiary hazard is Class 8, Packaging Group, III.

58. In § 173.301, paragraph (i) is revised to read as follows:

§ 173.301 General requirements for shipment of compressed gases in cylinders and spherical pressure vessels.

* * * * *

(i) *Foreign cylinders in domestic use.* (1) Except as provided in this section and § 171.12(c) of this subchapter, a charged cylinder manufactured outside the United States may not be offered for transportation to, from, or within the United States unless it has been manufactured, inspected, and tested in accordance with the applicable DOT specification set forth in part 178 of this subchapter.

(2) Effective October 1, 1999, a CTC specification cylinder manufactured, originally marked and approved in accordance with the Canadian Transport Commission (CTC) regulations and in full conformance with the Canadian Transport of Dangerous Goods (TDG) Regulations is authorized for the transportation of a hazardous material to, from or within the United States under the following conditions:

(i) The CTC specification corresponds with a DOT specification and the cylinder markings are the same as those specified in this subchapter except that they were originally marked with the letters ''CTC in place of DOT;

(ii) The cylinder has been requalified under a program authorized by the Canadian TDG regulations or requalified in accordance with the requirements in § 173.34(e) within the prescribed requalification period provided for the corresponding DOT specification;

(iii) When the regulations authorize a cylinder for a specific hazardous material with a specification marking prefix of ''DOT, a cylinder marked ''CTC which otherwise bears the same markings that would be required of the specified ''DOT'' cylinder may be used; and

(iv) Transport of the cylinder and the material it contains is in all other respects in conformance with the requirements of this subchapter (e.g. valve protection, filling requirements, operational requirements, etc.).

* * * * *

59. In § 173.306, new paragraphs (f)(4) and (f)(5) are added to read as follows:

§ 173.306 Limited quantities of compressed gases.

* * * * *

(f) * * *

(4) Accumulators intended to function as shock absorbers, struts, gas springs, pneumatic springs or other impact or energy-absorbing devices are not subject to the requirements of this subchapter provided each:

(i) Has a gas space capacity not exceeding 1.6 liters and a charge pressure not exceeding 280 bar, where the product of the capacity expressed in liters and charge pressure expressed in bars does not exceed 80 (for example, 0.5 liter gas space and 160 bar charge pressure);

(ii) Has a minimum burst pressure of 4 times the charge pressure at 20°C for products not exceeding 0.5 liter gas space capacity and 5 times the charge pressure for products greater than 0.5 liter gas space capacity;

(iii) Design type has been subjected to a fire test demonstrating that the article relieves its pressure by means of a fire degradable seal or other pressure relief device, such that the article will not fragment and that the article does not rocket; and

(iv) Accumulators must be manufactured under a written quality assurance program which monitors parameters controlling burst strength, burst mode and performance in a fire situation as specified in paragraphs (f)(4)(i) through (f)(4)(iii) of this section. A copy of the quality assurance program must be maintained at each facility at which the accumulators are manufactured.

(5) Accumulators not conforming to the provisions of paragraphs (f)(1) through (f) (4) of this section, may only be transported subject to the approval of the Associate Administrator for Hazardous Materials Safety.

* * * * *

§ 173.306 [Amended]

60. In addition, in § 173.306, paragraph (d) is removed and reserved.

PART 174—CARRIAGE BY RAIL

61. The authority citation for Part 174 continues to read as follows:

Authority: 49 U.S.C. 5101–5127; 49 CFR 1.53.

62. In § 174.81, a new paragraph (g)(3)(vi) is added to read as follows:

§ 174.81 Segregation of hazardous materials.

* * * * *

(g) * * *

(3) * * *

(vi) ''6'' means explosive articles in compatibility group G, other than fireworks and those requiring special stowage, may be stowed with articles of compatibility groups C, D and E, provided no explosive substances are carried in the same rail car.

* * * * *

§ 174.81 [Amended]

63. In addition, in § 174.81, in the paragraph (f) Compatibility Table for Class 1 (Explosive) Materials, the following changes are made:

a. For the entry, ''C'', under the Column (1) heading, ''Compatibility Group'', in Column G, the letter ''X'' is revised to read ''6''.

b. For the entry ''D'', under the Column (1) heading, ''Compatibility Group'', in Column G, the letter ''X'' is revised to read ''6''.

c. For the entry ''E'', under the Column (1) heading, ''Compatibility Group'', in Column G, the letter ''X'' is revised to read ''6''.

d. For the entry ''G'', under the Column (1) heading, ''Compatibility Group'', in Columns ''C'', ''D'', and ''E'', the letter ''X'' is revised to read ''6'' each place it appears.

64. Section 174.680 is revised to read as follows:

§ 174.680 Division 6.1 (poisonous) materials with foodstuffs.

(a) Except as provided in paragraph (b) of this section, a carrier may not transport any package bearing a POISON or POISON INHALATION HAZARD label in the same car with any material marked as, or known to be, a foodstuff, feed or any other edible material intended for consumption by humans or animals.

(b) A carrier must separate any package bearing a POISON label displaying the text ''PG III,'' or bearing a ''PG III'' mark adjacent to the POISON label, from materials marked as or known to be foodstuffs, feed or any other edible materials intended for consumption by humans or animals, as required in § 174.81(e)(3) for classes identified with the letter ''O'' in the Segregation Table for Hazardous Materials.

PART 175—CARRIAGE BY AIRCRAFT

65. The authority citation for part 175 continues to read as follows:

Authority: 49 U.S.C. 5101–5127; 49 CFR 1.53.

§ 175.630 [Amended]

66. In § 175.630, in paragraph (a), the wording ''KEEP AWAY FROM FOOD,'' is removed.

PART 176—CARRIAGE BY VESSEL

67. The authority citation for part 176 continues to read as follows:

Authority: 49 U.S.C. 5101–5127; 49 CFR 1.53.

68. In § 176.76, a new paragraph (i) is added to read as follows:

§ 176.76 Transport vehicles, freight containers, and portable tanks containing hazardous materials.

* * * * *

(i) Containers packed or loaded with flammable gases or liquids having a flashpoint of 23° C or less and carried on deck must be stowed ''away from'' possible sources of ignition.

69. In § 176.83, paragraphs (a)(1), (a)(3) and (a)(8) are revised and a new paragraph (a)(10) is added to read as follows:

§ 176.83 Segregation.

(a) * * * (1) The requirements of this section apply to all cargo spaces on deck or under deck of all types of vessels, and to all cargo transport units.

* * * * *

(3) The general requirements for segregation between the various classes of dangerous goods are shown in the segregation table. In addition to these general requirements, there may be a need to segregate a particular material from other materials which would contribute to its hazard. Such segregation requirements are indicated by code numbers in Column 10B of the § 172.101 Table.

* * * * *

(8) Notwithstanding the requirements of paragraphs (a)(6) and (a)(7) of this section, hazardous materials of the same class may be stowed together without regard to segregation required by secondary hazards (subsidiary risk label(s)), provided the substances do not react dangerously with each other and cause:

(i) Combustion and/or evolution of considerable heat;

(ii) Evolution of flammable, toxic or asphyxiant gases;

(iii) The formation of corrosive substances; or

(iv) the formation of unstable substances.

* * * * *

(10) Where the code in column (10B) of the § 172.101 Table specifies that ''Segregation as for. . .'' applies, the segregation requirements applicable to that class in the § 176.83(b) General Segregation Table must be applied. However, for the purposes of paragraph (a)(8) of this section, which permits substances of the same class to be

stowed together provided they do not react dangerously with each other, the segregation requirements of the class as represented by the primary hazard class in the § 172.101 Table entry must be applied.

* * * * *

§ 176.83 [Amended]

70. In addition, in § 176.83, in the paragraph (g)(3) Table, for the segregation requirement ''1. Away From'' , for the entries ''Fore and aft.'' and ''Athwartships.'', under the Column heading ''Open versus open'', under Column ''On deck'', the wording ''No restriction'' is revised to read ''At least 3 meters'' in both places it appears.

71. In § 176.600, the section heading and paragraphs (a) and (c) are revised to read as follows:

§ 176.600 General stowage requirements.

(a) Each package required to have a POISON GAS, POISON INHALATION HAZARD, or POISON label, being transported on a vessel, must be stowed clear of living quarters and any ventilation ducts serving living quarters and separated from foodstuffs, except when the hazardous materials and the foodstuffs are in different closed transport units.

* * * * *

(c) Each package bearing a POISON label displaying the text ''PG III'' or bearing a ''PG III'' mark adjacent to the poison label must be stowed away from foodstuffs.

* * * * *

PART 177—CARRIAGE BY PUBLIC HIGHWAY

72. The authority citation for Part 177 continues to read as follows:

Authority: 49 U.S.C. 5101–5127; 49 CFR 1.53.

73. In § 177.841, paragraph (e)(3) is revised to read as follows:

§ 177.841 Division 6.1 (poisonous) and Division 2.3 (poisonous gas) materials.

* * * * *

(e) * * *

(3) Bearing a POISON label displaying the text ''PG III,'' or bearing a ''PG III'' mark adjacent to the POISON label, with materials marked as, or known to be, foodstuffs, feed or any other edible material intended for consumption by humans or animals, unless the package containing the Division 6.1, Packing Group III material is separated in a manner that, in the event of leakage from packages under conditions normally incident to transportation, commingling of hazardous materials with foodstuffs, feed or any other edible material would not occur.

§ 177.841 [Amended]

74. In addition, in § 177.841, in the introductory text of paragraph (e)(1), the wording ''Bearing or required to bear a POISON'' is removed and ''Except as provided in paragraph (e)(3) of this section, bearing or required to bear a POISON'' is added in its place.

75. In § 177.848, a new paragraph (g)(3)(vi) is added to read as follows:

§ 177.848 Segregation of hazardous materials.

* * * * *

(g) * * *

(3) * * *

(vi) ''6'' means explosive articles in compatibility group G, other than fireworks and those requiring special stowage, may be stowed with articles of compatibility groups C, D and E, provided no explosive substances are carried in the same vehicle.

* * * * *

§ 177.848 [Amended]

76. In addition, in § 177.848, in the paragraph (f) Compatibility Table for Class 1 (Explosive) Materials, the following changes are made:

a. For the entry ''C'', under the Column (1) heading, ''Compatibility Group'', in Column G, the letter ''X'' is revised to read ''6''.

b. For the entry ''D'', under the Column (1) heading, ''Compatibility Group'', in Column G, the letter ''X'' is revised to read ''6''.

c. For entry ''E'', under the Column (1) heading, ''Compatibility Group'', in Column G, the letter ''X'' is revised to read ''6''.

d. For the entry ''G'', under the Column (1) heading, ''Compatibility Group'', in Columns ''C'', ''D'' and ''E'', the letter ''X'' is revised to read ''6'' each place it appears.

PART 178—SPECIFICATIONS FOR PACKAGINGS

77. The authority citation for part 178 continues to read as follows:

Authority: 49 U.S.C. 5101–5127; 49 CFR 1.53.

§ 178.270–3 [Amended]

78. In § 178.270–3, in paragraph (e), in the second sentence, the reference ''ISO 82–1974(e)'' is removed and ''ISO 82'' is added in its place.

§ 178.509 [Amended]

79. In § 178.509, in paragraph (b)(1), in the second sentence, the wording ''unless approved by the Associate Administrator for Hazardous Materials Safety'' is added immediately following the words ''may be used''.

80. In § 178.703, paragraph (b)(6)(ii) is revised to read as follows:

§ 178.703 Marking of intermediate bulk containers.

* * * * *

(b) * * *

(6) * * *

(ii) When a composite intermediate bulk container is designed in such a manner that the outer casing is intended to be dismantled for transport when empty (such as, for the return of the intermediate bulk container for reuse to the original consignor), each of the parts intended to be detached when so dismantled must be marked with the month and year of manufacture and the name or symbol of the manufacturer.

81. In § 178.813, in paragraph (b), a sentence is added to the end of the paragraph to read as follows:

§ 178.813 Leakproofness test.

* * * * *

(b) * * * The inner receptacle of a composite intermediate bulk container may be tested without the outer packaging provided the test results are not affected.

* * * * *

PART 180—CONTINUING QUALIFICATION AND MAINTENANCE OF PACKAGINGS

82. The authority citation for part 180 continues to read as follows:

Authority: 49 U.S.C. 5101–5127; 49 CFR 1.53.

83. in § 180.352, the section heading and paragraphs (b)(1), (b)(2), (b)(3) introductory text and (c) heading and introductory text are revised, paragraphs (d) and (e) are redesignated as paragraphs (e) and (f), respectively, and new paragraph (d) Is added to read as follows:

§ 180.352 Requirements for retest and inspection of intermediate bulk containers (IBCs).

* * * * *

(b) * * *

(1) Each IBC intended to contain liquids or solids that are loaded or discharged under pressure must be tested in accordance with the leakproofness test prescribed in § 178.813 of this subchapter every 2.5 years, starting from the date of manufacture or the date of a repair conforming to paragraph (d)(1) of this section.

(2) An external visual inspection must be conducted initially after production and every 2.5 years starting from the

date of manufacture or the date of a repair conforming to paragraph (d)(1) of this section to ensure that:

(i) The IBC is marked in accordance with requirements in § 178.703 of this subchapter. Missing or damaged markings, or markings difficult to read must be restored or returned to original condition.

(ii) Service equipment is fully functional and free from damage which may cause failure. Missing, broken, or damaged parts must be repaired or replaced.

(iii) The IBC is capable of withstanding the applicable design qualification tests. The IBC must be externally inspected for cracks, warpage, corrosion or any other damage which might render the IBC unsafe for transportation. An IBC found with such defects must be removed from service or repaired in accordance with paragraph (d) of this section. The inner receptacle of a composite IBC must be removed from the outer IBC body for inspection unless the inner receptacle is bonded to the outer body or unless the outer body is constructed in such a way (e.g., a welded or riveted cage) that removal of the inner receptacle is not possible without impairing the integrity of the outer body. Defective inner receptacles must be replaced in accordance with paragraph (d) of this section or the entire IBC must be removed from service. For metal IBCs, thermal insulation must be removed to the extent necessary for proper examination of the IBC body.

(3) Each metal, rigid plastic and composite IBC must be internally inspected at least every five years to ensure that the IBC is free from damage and to ensure that the IBC is capable of withstanding the applicable design qualification tests.

* * * * *

(c) *Visual inspection for flexible, fiberboard, or wooden IBCs.* Each IBC must be visually inspected prior to first use and permitted reuse, by the person who places hazardous materials in the IBC, to ensure that:

* * * * *

(d) *Requirements applicable to repair of IBCs.* (1) Except for flexible and fiberboard IBCs and the bodies of rigid plastic and composite IBCs, damaged IBCs may be repaired and the inner receptacles of composite packagings may be replaced and returned to service provided:

(i) The repaired IBC conforms to the original design type and is capable of withstanding the applicable design qualification tests;

(ii) An IBC intended to contain liquids or solids that are loaded or discharged under pressure is subjected to a leakproofness test as specified in § 178.813 of this subchapter and is marked with the date of the test; and

(iii) The IBC is subjected to the internal and external inspection requirements as specified in paragraph (b) of this section.

(2) Except for flexible and fiberboard IBCs, the structural equipment of an IBC may be repaired and returned to service provided:

(i) The repaired IBC conforms to the original design type and is capable of withstanding the applicable design qualification tests; and

(ii) The IBC is subjected to the internal and external inspection requirements as specified in paragraph (b) of this section.

(3) Service equipment may be replaced provided:

(i) The repaired IBC conforms to the original design type and is capable of withstanding the applicable design qualification tests;

(ii) The IBC is subjected to the external visual inspection requirements as specified in paragraph (b) of this section; and

(iii) The proper functioning and leak tightness of the service equipment, if applicable, is verified.

* * * * *

Issued in Washington, DC on February 14, 1999, under authority delegated in 49 CFR part 1.

Stephen D. Van Beek,

Acting Administrator.

[FR Doc. 99–4517 Filed 3–4–99; 8:45 am]

BILLING CODE 4910–60–P

federal register

Friday
March 5, 1999

Part III

Department of Transportation

National Highway Traffic Safety Administration

49 CFR Parts 571 and 596

Federal Motor Vehicle Safety Standards; Child Restraint Systems; Child Restraint Anchorage Systems; Final Rule

DEPARTMENT OF TRANSPORTATION

National Highway Traffic Safety Administration

49 CFR Parts 571 and 596

[Docket No. 98–3390, Notice 2]

RIN 2127–AG50

Federal Motor Vehicle Safety Standards; Child Restraint Systems; Child Restraint Anchorage Systems

AGENCY: National Highway Traffic Safety Administration (NHTSA), Department of Transportation.

ACTION: Final rule.

SUMMARY: This final rule establishes a new Federal motor vehicle safety standard that requires motor vehicle manufacturers to provide motorists with a new way of installing child restraints. In the future, vehicles will be equipped with child restraint anchorage systems that are standardized and independent of the vehicle seat belts.

The new independent system will have two lower anchorages, and one upper anchorage. Each lower anchorage will include a rigid round rod or ''bar'' unto which a hook, a jaw-like buckle or other connector can be snapped. The bars will be located at the intersection of the vehicle seat cushion and seat back. The upper anchorage will be a ring-like object to which the upper tether of a child restraint system can be attached. The new independent anchorage system will be required to be installed at two rear seating positions. In addition, a tether anchorage will be required at a third position. This final rule also amends the child restraint standard to require child restraints to be equipped with means for attaching to the new independent anchorage system.

This final rule is being issued because the full effectiveness of child restraint systems is not being realized. The reasons for this include design features affecting the compatibility of child restraints and both vehicle seats and vehicle seat belt systems. By requiring an easy-to-use anchorage system that is independent of the vehicle seat belts, this final rule makes possible more effective child restraint installation and will thereby increase child restraint effectiveness and child safety.

Issuance of this rule makes the United States the first country to adopt requirements for a complete universal anchorage system. To the extent consistent with safety, NHTSA has sought to harmonize its rule with requirements being considered by standard bodies and regulatory authorities in Europe and elsewhere. The agency has harmonized with anticipated Economic Commission for Europe and Canadian regulations by requiring that bars be used as the lower anchorages for installing child restraints. The agency has also harmonized with Canadian and Australian regulations by expressly requiring tether anchorages in vehicles and indirectly requiring tethers on most child restraints.

For the convenience of the traveling public, DOT wants child restraints complying with this final rule to be usable in both aircraft and motor vehicles to the extent practicable. To that end, the agency is developing a proposal to ensure that the new child restraints are not designed in a way that might make them unsuitable for aircraft use. NHTSA expects to issue the proposal next spring.

DATES: The amendments made in this rule are effective September 1, 1999.

The incorporation by reference of the material listed in this document is approved by the Director of the Federal Register as of September 1, 1999.

Petitions for reconsideration of the rule must be received by April 19, 1999.

ADDRESSES: Petitions for reconsideration should refer to the docket number of this document and be submitted to: Administrator, Room 5220, National Highway Traffic Safety Administration, 400 Seventh Street S.W., Washington, D.C., 20590.

FOR FURTHER INFORMATION CONTACT: For nonlegal issues: George Mouchahoir, PhD. (202–366–4919), Office of Crashworthiness Standards, NHTSA.

For legal issues: Deirdre R. Fujita, Office of the Chief Counsel (202–366–2992), NHTSA.

Both of the above persons can be reached at the National Highway Traffic Safety Administration, 400 Seventh St., S.W., Washington, D.C., 20590.

SUPPLEMENTARY INFORMATION:

Table of Contents

I. Executive Summary of this Final Rule
- a. Final rule
- b. Why NHTSA is issuing this rule: the underlying issue, and how this rule addresses it
- c. How and why this final rule differs from the agency's NPRM: particularly, why NHTSA selected the ISO rigid bar anchorage system, instead of the flexible latchplate anchorage system
- d. Future proposal to promote the usability of the new child restraints in both aircraft and motor vehicles

II. Safety Issue
- a. Why is something being done to improve child restraint safety? Aren't child restraints highly effective already?
- b. Factors affecting child restraint effectiveness

III. Summary of the NPRM
- a. What NHTSA proposed to address the issue; preference for flexible latchplate anchorage system over the rigid bar anchorage system
- b. Proposed leadtime
- c. NPRM's estimated benefits and costs of the rulemaking
- d. Alternatives considered

IV. Summary of the Comments
- a. Commenters supporting flexible latchplate anchorage system
- b. Commenters supporting rigid bar anchorage system

V. Summary of Post-Comment Period Events and Docket Submissions
- a. ISO working group refines and completes draft ISO standard on rigid bar anchorage system
- b. Child restraint manufacturers shift support to rigid bar anchorage system
- c. Industry conducts consumer focus group testing on which lower anchorage system is preferred
- d. Canada issues rule on tether anchorages

VI. Agency Decision Regarding Final Rule
- a. Summary of the final rule
- b. Summary of key differences between NPRM and final rule

VII. Issue-by-Issue Discussion of the Agency Decision on Content of Final Rule
- a. NHTSA determines the anchorage systems are essentially equal on the merits
- b. There is substantial consumer interest in both anchorage systems
- c. NHTSA determines only one lower anchorage system can be selected
- d. NHTSA selects the rigid bar anchorage system based on its advantages over the flexible latchplate anchorage system
  - 1. The first advantage is harmonization of standards
  - 2. The second advantage is enhanced design flexibility which provides a reasonably predictable prospect for design improvements that will enhance either safety or public acceptability or both
  - 3. The third advantage is possible safety benefits
- e. NHTSA's final rule is not identical to the draft ISO standard
  - 1. Bars may not be attached to the vehicle by webbing materials
  - 2. The bars must be visible or the vehicle seat back marked to assist consumers in locating them
  - 3. A tether anchorage is not required by the draft ISO standard, but is required by this final rule
- f. The types of vehicles that are subject to the adopted requirements
- g. The number of anchorage systems that are required in each vehicle
- h. Lockability requirement will be retained until 2012
- i. Strength requirements for lower rigid bars of child restraint anchorage system and compliance test procedures
- j. Requirements for child restraints
- k. Performance and testing requirements for tether anchorages
- l. Leadtime and phasing-in the requirements

1. Tether anchorage and tether strap
2. Lower anchorage bars and means for attaching child restraints to those bars
3. Requirement to identify vehicles certified to the vehicle requirements during the phase-in
VIII. Rulemaking Analyses and Notices
a. Executive Order 12866 (Federal Regulation) and DOT Regulatory Policies and Procedures
b. Regulatory Flexibility Act
c. Executive Order 12612
d. Unfunded Mandates Reform Act
e. National Technology Transfer and Advancement Act
f. National Environmental Policy Act
g. Executive Order 12778 (Civil Justice Reform)
h. Paperwork Reduction Act

I. Executive Summary of This Final Rule

a. Final Rule

Child restraint systems are highly effective in reducing the likelihood of death or serious injury in motor vehicle crashes. The agency estimates that child restraints are potentially 71 percent effective in reducing the likelihood of death.[1] However, the extent to which this level of effectiveness is achieved in actual use depends upon a number of factors, including how well motorists are able to adapt the vehicle seat belts for the installation of the child restraints, and upon the compatibility between child restraints and vehicle seats and seat belts. As a result of improper installation of children in child restraints and child restraints in vehicles, the actual average effectiveness for all child restraints in use in preventing fatalities is 59 percent.[2]

This final rule will improve the actual average effectiveness of child restraint systems by improving the compatibility of child restraints and vehicles and making them easier to install. This rule requires that motor vehicles be equipped with a easy-to-use anchorage system designed to be used exclusively for securing child restraints. Each vehicle anchorage system will consist of an upper anchorage point and two lower anchorage points. Each lower anchorage includes a 6 millimeter (mm) (0.24 inches (in.)) diameter straight rod, or ''bar,'' that is attached to the vehicle and is lateral and horizontal in direction. The bars are located near the intersection of the seat cushion and seat back in a position where they will not be felt by seated occupants. The upper anchorage is a user-ready component for attaching the top tether of a child restraint. This preamble refers to this system as the ''rigid bar anchorage system,'' in reference to the 6 mm diameter bars, which are rigidly mounted to the vehicle.

Each vehicle must have at least two vehicle anchorage systems rearward of the front seat. However, if a vehicle has a rear seat with insufficient space to accommodate a rear facing infant seat, and is equipped with, as original equipment (OE), an air bag cutoff switch that deactivates the air bag for the front passenger position, one anchorage system must be provided in that position, and another in a rear seating position to accommodate a forward-facing child restraint.[3] If a vehicle has no rear seat, and is equipped with an OE air bag cutoff switch that deactivates the air bag for the front passenger position, one anchorage system must be provided in that position.

Each vehicle with at least three rear designated seating positions must also have a third rear designated seating position equipped with a user-ready tether anchorage. The third tether anchorage provides parents an improved means of attaching the new child restraints at a third rear seating position. In a typical family car with three rear seating positions, the third tether anchorage would likely be at the center rear seating position, which is a seating position that many parents prefer placing their child. A full child restraint anchorage system (consisting of the two rigid bars for the lower anchorages and a top tether anchorage) is not required to be installed in the center rear seating position because it may be difficult to fit the lower anchorages of two child restraint anchorage systems, or two child restraint systems, adjacent to each other in the rear seat of small vehicles. Further, a lap belt at the center rear seating position, together with a tether anchorage at that position, should perform essentially as well as a full child restraint anchorage system. For these reasons, and to minimize the cost of facilitating the use of the new child restraints in the third position, the agency is requiring two, and not three, child restraint anchorage systems.

Each child restraint will have components, such as hooks or buckles, that are designed to clasp to the two lower rigid bars of a vehicle's rigid bar anchorage system. Although the final rule does not expressly require child restraints to have top tethers, it establishes stricter limits on the distance that the head of a dummy seated in a child restraint may move forward during a test simulating a frontal vehicle crash (head excursion limit). Almost all child restraint models will likely be equipped with a top tether in order to comply with the new head excursion limit.

Each child restraint will also have to continue to be capable of being attached to a vehicle by way of the vehicle's belt system. This way, child restraints that have the new components can still be used on older model vehicles that do not have a child restraint anchorage system. Child restraints with the new components can also still be used on aircraft, using the aircraft belt system to attach to the aircraft seat. Older model child restraints that do not have the new components attaching to the child restraint anchorage system can use vehicle belts, as child restraints do now, to attach to new vehicle seats that have a child restraint anchorage system.

The requirements adopted today reflect a worldwide effort to improve the installation of child restraints in motor vehicles. This final rule uses the technical specifications set forth in a draft standard being developed by a working group to the International Organization for Standardization (ISO), a worldwide voluntary federation of ISO member bodies. NHTSA anticipates that the ISO, which began work on an independent child restraint anchorage system in the early 1990's, will be adopting the draft standard as a final standard within the next year. Incorporation of the ISO standard into the regulations of the European community is likely to follow. Canada and Australia have also indicated their intent to undertake regulatory action aimed at requiring the rigid bar anchorage system to improve child restraint attachment for their countries' children.

NHTSA is issuing this final rule at this date, prior to the ISO's completion of work on the draft standard, in order to provide increased safety to this country's children as quickly as possible. Further, the agency anticipates that the ISO and the working group will not make significant changes to the draft ISO standard. To the extent that the final ISO standard differs from this final rule, the agency will evaluate those differences to determine if changes to this final rule appear warranted. In the event NHTSA tentatively determines

[1] Kahane, Charles J. (1986), *An Evaluation of the Effectiveness and Benefits of Safety Seats,* U.S. Department of Transportation, National Highway Traffic Safety Administration, DOT HS 806 889, p. 305. The agency believes that this figure remains valid.

[2] Hertz, Ellen (1996), Research Note, ''Revised Estimates of Child Restraint Effectiveness,'' U.S. Department of Transportation, National Highway Traffic Safety Administration.

[3] The anchorage for a front seat tether could be attached any one of three places: the ceiling; the floor pan right behind the front seat; or to the back of the lower part of the seat structure.

that changes may be warranted, the agency will commence a rulemaking proceeding and make a decision as to the issuance of an amendment based on all available information developed in the course of that proceeding, in accordance with statutory criteria.

b. Why NHTSA Is Issuing This Rule: The Underlying Issue, and How This Rule Corrects It

This rule makes it easier to install child restraints by eliminating the current dependence of motorists on vehicle seat belts as the means of installing child restraints in vehicles. The primary purpose of seat belts has always been to protect older children, teenagers and adults from serious injury in vehicle crashes. A secondary purpose of seat belts has been to install child restraints in vehicles.

Attempting to design seat belts to achieve the first purpose (restraining older children, teenagers and adults) has sometimes led to design choices that may have made it more difficult for the belts to achieve the second purpose (tightly securing a child restraint). One design change is the replacement of simple lap belts with integrated lap/shoulder belts in the back seats of vehicles. Another change is the positioning of some seat belt anchorages several inches forward of the seat back to better position the lap belt low on the pelvis of these occupants. While these and other design changes have increased the ability of vehicle belt systems to restrain occupants, they have made it harder for motorists to use the belts on some vehicles for installing child restraints.

By requiring motor vehicles to be equipped with standardized anchorages designed exclusively for the purpose of securing child restraints, this final rule will help vehicle and seat belt manufacturers design belts to more effectively perform a dual role. Manufacturers will be able to optimize seat belts to restrain older children, teenagers and adults. Further, the final rule will provide motorists with a means of securing child restraints that is easier and more effective.

By requiring an independent child restraint anchorage system, the final rule improves the compatibility of vehicle seats and child restraints and the compatibility of seat belts and child restraints. Installation of the new system will result in more child restraints being correctly installed. The standardized vehicle anchorages and the means of attachment on child restraints are intuitive and easy-to-use. For example, they eliminate the need to route the vehicle belt through or around the child restraint. By making child restraints easier to install, correct use and effectiveness will be increased.

The requirement for top tether anchorages in vehicles will be implemented before the requirement for the lower vehicle anchorages since less leadtime is needed for the installation of the tether anchorages. In those vehicles equipped with tether anchorages but not lower anchorages, owners can install a child restraint complying with this rule by attaching the tether and using the vehicle seat belts to secure the lower part of the child restraint. Tether anchorages will be required in the vast majority of passenger cars beginning September 1, 1999[4], and in all light trucks, buses and multipurpose passenger vehicles beginning September 1, 2000. To provide consumers with the standardized lower anchorages in vehicles as quickly as possible, this rule specifies a three year phase-in that begins September 1, 2000. Beginning on that date, this rule requires vehicle manufacturers to begin installing the new lower anchorages in new passenger cars, in trucks and multipurpose passenger vehicles with a gross vehicle weight rating (GVWR) of 3,856 kilograms (kg) (8,500 lb) or less, and in buses with a GVWR of 4,536 kg (10,000 lb) or less (including school buses in that GVWR category). Beginning on September 1, 2002, the new lower anchorages will be required in all new vehicles in those categories.

The requirement (the stricter head excursion limit) that will cause top tethers to be installed on most child restraint systems will be effective September 1, 1999. The requirement for child restraints to be equipped with means for attaching to the lower anchorages will be effective September 1, 2002. NHTSA believes that the latter requirement should not be phased-in. Child restraint manufacturers have informed the agency that a phase-in would not be successful because they do not have the same type of control over the distribution of their products that vehicle manufacturers have. According to the child restraint manufacturers, if they were to produce both current child restraint systems as well as child restraints with the new attachments, distributors and retailers of their products would order mainly the current child restraints to sell, which do not have the new attachments, and not the new restraints because the current systems would cost less than the new child restraint systems. Further, NHTSA has decided against requiring all new child restraints to have the new attachments earlier than the date on which vehicles will be equipped with the lower anchorage system because new vehicles equipped with the new attachment system will be a small proportion of the total vehicle fleet during the phase-in period. Nevertheless, the agency anticipates that some child restraint manufacturers will begin offering new designs during the phase-in period, to meet a market demand for the products.

c. How and Why This Final Rule Differs From the Agency's NPRM: Particularly, Why NHTSA Selected The ISO Rigid Bar Anchorage System, Instead of the Flexible Latchplate Anchorage System

Today's final rule adopts the key aspect of the proposal. As in the proposal, this rule requires vehicles to be equipped with an independent anchorage system for attaching child restraints. An independent system is strongly preferred by consumers over current seat belts as the means of attaching child restraint systems. The independent system uses three attachment points for securing a child restraint to a vehicle seat (the two lower anchorages and the top tether). The two lower points are at or near the intersection of the vehicle seat cushion and seat back.

However, this final rule differs from the proposed system in several important respects. The agency proposed to permit either of two lower anchorage systems for vehicles: (1) the rigid bar anchorage system adopted in this final rule; or (2) a buckle and flexible latchplate system known as ''the uniform child restraint anchorage system'' (''UCRA'' system). The buckle and latchplate of the second system are similar to what is used for adult seat belts in vehicles. The two lower anchorages consist of small latchplates, attached to flexible webbing, near the intersection of the vehicle seat cushion and seat back. (In reference to the latchplates and to the flexibility of the webbing, hereinafter this preamble refers to the UCRA system as the ''flexible latchplate system.'' This is to provide a more descriptive term for the system than ''UCRA,'' for the reader's convenience.) Buckles designed to attach to the latchplates are attached to the child restraint by belt webbing.

Both systems would have been permitted under the NPRM because each had its advantages. At the time of the proposal, information available to NHTSA indicated that the installation of

[4] The requirement will be phased in, with 80 percent of a vehicle manufacturer's passenger car fleet required to have user-ready tether anchorages by September 1, 1999, and the remaining 20 percent required to comply September 1 of the following year.

the flexible latchplate system, instead of the rigid bar anchorage system, in motor vehicles would result in less added cost and weight for child restraints. This information was contained in a study performed by a contractor for NHTSA. At the time of that study, the then-existing prototypes of child restraints made to connect with the rigid bar anchorage system were significantly different from current prototypes. The then-existing prototypes typically had rigid prongs, or runners, for attaching the child restraints to the rigid bars and a substantial (and therefore heavy) supporting structure for the runners. Based on that information from the study, the agency's cost analysis indicated that the buckles of the flexible latchplate system (which were attached to the child restraint by means of webbing) would add an estimated $14 to the cost of a child restraint, while the rigid prongs (attached by means of a heavy base) would add $60 to $100 to the cost of a child restraint.

Although the two systems appeared to have similar safety benefits, the lower anchorage of the flexible latchplate system appeared to necessitate making less costly changes to child restraints than the rigid bar anchorage system. Accordingly, the agency gave preference to the flexible latchplate system in its proposal. It did this by proposing to require that all child restraints have the buckles for attaching to the flexible latchplate system. The rigid bar anchorage system could have been provided only if the vehicle manufacturer also provided an adapter that would connect at one end to the rigid bar and at the other end to the buckles on the child restraint.

The agency has decided to require the installation of rigid bar anchorage systems in motor vehicles instead of permitting either those systems or flexible latchplate anchorage systems. Commenters urged NHTSA to mandate a single system because of their opposition to an adapter. They believed that an adapter would be lost or misused by consumers, resulting in buckle-equipped child restraints unable to use or improperly using a rigid bar anchorage system in the vehicle. Further, the agency notes that mandating a single system standardizes the anchorage system and thereby promotes consumer understanding of and familiarity with the system.

In deciding which system to select, NHTSA noted that the rigid bar anchorage system and the flexible latchplate system appear to be roughly equally acceptable to the public. ISO-reported consumer clinics that were conducted overseas and in Canada indicated comparable levels of consumer acceptance for the two systems. In the most recent consumer preference clinic, which was sponsored by U.S. and foreign vehicle manufacturers, child restraint designs that were compatible with the rigid bar anchorage system and with the flexible latchplate system were strongly preferred over current child restraints designs that use vehicle seat belts to attach to the vehicle. While consumers scored the child restraint design that had the buckles highest, the three systems that had the rigid bar anchorage-type of child restraints were, in aggregate, the first choice of a large number of participants. This does not mean that the consumers selected the rigid bar over the flexible latchplate as their preferred *vehicle* system. However, it does appear to indicate that the design flexibility of the rigid bar system accommodated a variety of child restraint attachment options that, in aggregate, resulted in more ''first place'' finishes than the flexible latchplate design.

The agency also noted that when the flexible latchplate lower anchorage system is compared to new prototypes of child restraints designed to attach to rigid anchorages, the flexible latchplate system loses much or all of the cost and weight advantage it was thought to have at the time of the NPRM. After the NPRM was published, a number of child restraint and vehicle manufacturers determined that child restraints need not have rigid runners to attach to the rigid bar anchorage system. They told the agency that hooks and other devices were viable alternatives to rigid runners, and would be used by most child restraint manufacturers if the rigid bar anchorage system were adopted. They said that the hooks and other alternative connectors could be attached to the child restraint with belt webbing, in the same way the buckles for the flexible latchplates can be attached to the child restraint. New analysis by the agency indicates that these alternative rigid bar anchorage connectors would cost about the same or less than the flexible latchplate buckles, and would not add substantial bulk or weight to child restraints.

The rigid bar anchorage system currently has fairly wide support among both vehicle and child restraint manufacturers. In June 1996, the flexible latchplate anchorage system was supported by a wide variety of vehicle manufacturers (virtually all domestic and foreign vehicle manufacturers except for European manufacturers) and child restraint manufacturers. Now, however, the only major vehicle manufacturer on record with this agency as expressly favoring the flexible latchplate anchorage system is General Motors. The shift to the rigid bar anchorage system began shortly before publication of the NPRM. At that time, Ford and Chrysler announced that they had changed their support to the rigid bar anchorage system. Recently, Toyota expressed support for the rigid bar anchorage system. In addition, most child restraint manufacturers now support the rigid bar anchorage system.

Manufacturers cited the potential advantages of the rigid bar anchorage system over the flexible latchplate system. They believe that the rigid bar anchorage system will further international harmonization of safety standards, while the flexible latchplate system will not. They also believe that the rigid bar anchorage system allows for greater design flexibility than the flexible latchplate system in the design of child restraints and the connectors used to attach to the anchorage system. They also believe that the rigid bar anchorage system will enhance safety better than the flexible latchplate system in side impacts, when rigid attachments are used on the child restraint to connect to the rigid 6 mm bars in the vehicle seat bight (the intersection of the seat cushion and the seat back). Many supporters of the rigid bar anchorage system cite test data that show that the system prevented head contact between a test dummy and the door structure in side impact simulations, while the flexible systems did not. Some child restraint manufacturers also believe that rigid attachments on both the vehicle and the child restraint could better limit head excursions of older children in frontal impacts.

NHTSA's selection of the rigid bar anchorage system harmonizes this final rule with the actions of other regulatory authorities around the world. Further, today's final rule adopts best practices in what has been a global effort to develop an effective and easy-to-use child restraint anchorage system. The rigid bar anchorage system is the one most likely to be chosen as an internationally harmonized design under the auspices of the United Nations Economic Commission for Europe. Canada is also in support of the rigid bar anchorage system and may be adopting the system in the future. This final rule also harmonizes with Canadian and Australian regulations by expressly requiring tether anchorages in vehicles and indirectly requiring tethers on most child restraints.

Harmonizing this rule with the actions of other international bodies is consistent with the goals of the Trade

Agreements Act of 1979, as amended (July 26, 1979, Public Law 96–39, section 1(a), 93 Stat. 144.) (19 U.S.C. 2501 *et seq.*). That Act requires, *inter alia*, Federal agencies to take into consideration international standards and, if appropriate, base the agencies' standards on international standards. The harmonization achieved by this rule permits vehicle and child restraint manufacturers to have a greater measure of planning certainty and predictability in designing and selling their products, helps ensure that parents are provided an anchorage system that meets their safety needs at the lowest possible cost, and eliminates a potential barrier to international trade.

d. Future Proposal To Promote the Usability of the New Child Restraints in Both Aircraft and Motor Vehicles

As NHTSA noted in its February 1997 NPRM, the Federal Aviation Administration (FAA) is concerned that some new child restraints might be manufactured with rigid ISO connectors or prongs that are neither foldable nor retractable. FAA believes that if a child restraint with non-folding, non-retracting rigid connectors were installed on an aircraft seat, the connectors or prongs might damage the aircraft seat cushions. They could also protrude into the leg space and egress path of the passengers sitting in the row immediately behind the seat.

NHTSA believes that the near-term prospect of child restraint manufacturers producing child restraints with non-folding, nonretractable rigid connectors is fairly remote. Most child restraint manufacturers are not using rigid connectors in their prototype development work. The one manufacturer focusing on rigid connectors has been using retractable rigid connectors or prongs in its product development work.

Nevertheless, the issue of child restraint/aircraft compatibility and consumer convenience is an important concern to NHTSA and FAA. The two agencies want parents to be able to buy a single child restraint that can be used in aircraft as well as in motor vehicles. To that end, NHTSA is developing a proposal to ensure that the new child restraints are not designed in a way that might make them unsuitable for aircraft use. The proposal would require that if a child restraint has rigid connectors, they must be foldable or retractable. As an alternative, the agency would propose to require foldability or retractability as a condition to certifying child restraints with rigid connectors for aircraft use. NHTSA expects to issue the proposal this spring.

II. Safety Issue

a. Why Is Something Being Done To Improve Child Restraint Safety? Aren't Child Restraints Highly Effective Already?

NHTSA estimates that, when installed correctly in a vehicle with compatible seating and seat belt systems, child restraints are 71 percent effective in reducing the likelihood of death in motor vehicle crashes. However, as a result of many child restraints either not being used correctly or installed in vehicles with seats or seat belts that are not fully compatible, the actual average effectiveness for the entire population of child restraints in use is 59 percent.[5]

b. Factors Affecting Child Restraint Effectiveness

The estimated 71 percent level of effectiveness is not realized in many cases for several reasons. Currently, the standardized means of attaching a child restraint is the vehicle belt system. Over the years, vehicle seats and belt systems evolved to better restrain the upper and lower torsos of older children, teenagers and adults. For example, seat belt anchorages are sometimes positioned several inches forward of the seat back to better position the lap belt low on the pelvis of these occupants. The need to design vehicle seat belts to perform the dual functions of restraining child restraint systems and of restraining the torsos of older children, teenagers and adults limits the extent to which vehicle belts can be designed to promote the effectiveness of child restraints.

To elaborate further on the example given above regarding seat belt anchorages, when vehicle belts attached to forward-mounted seat belt anchorages are used with a child restraint, the belts cannot initially provide any resistance to the forward movement of a child restraint in a frontal crash. The child restraint slides forward in a crash until the belt finally resists the forward movement of the child restraint. NHTSA estimates that seat belt anchorages positioned five or more inches forward of the seat back can increase the probability of severe or greater injury by over 11 percent. This final rule makes child restraints safer by reducing the likelihood of increased forward movement of the child's head, and the likelihood of head impact, and other traumas.

Other examples of the need to improve the compatibility of child restraint systems and vehicles include:

(1) The seat cushions and seat backs are deeply contoured. This improves the comfort of seated passenger and helps keep belted passengers in place, but limits the ability of the seat to provide a stable surface on which the child restraint can rest. This final rule will make child restraints more stable, regardless of the contours of the seat and seat back.

(2) The length of some seat belts and accompanying hardware attachments are not suitable for use with child restraints, or with special child restraints. In some seating positions, the distance between the anchorages for the lap belt and buckle is not as wide as a child restraint. In these cases, the seat belt may not tightly hold the child restraint and it can easily move from side to side. By providing a means for attaching child restraints that is independent of the vehicle belts, this final rule will improve the lateral stability of child restraints on the vehicle seat.

(3) Some vehicle seats are not wide enough or long enough to accommodate child restraints properly. This final rule will accommodate child restraints on these seats by providing an independent means of stability.

Efforts to make vehicle belt systems more effective for teenagers and adults have also resulted in the belt systems becoming more complex. Lap/shoulder belts replaced lap belts. On older vehicles, these belts need to be used with an accessory item, such as a locking clip, for use with child restraints. A locking clip impedes movement of the sliding latchplate on the lap/shoulder belt, which better restrains a child restraint when the car is maneuvering or changing its velocity. Since September 1, 1995, lap belts on new passenger vehicles are lockable without a locking clip, but the belt must be maneuvered in a special manner not always understood by consumers to engage the locking feature.

Due in part to these complexities, the rate of incorrect usage of child restraints is high. A four-state study done for NHTSA in 1996 examined people who use child restraint systems and found that approximately 80 percent of the persons made at least one significant error in using the systems. (''Patterns of Misuse of Child Safety Seats,'' DOT HS 808 440, January 1996.) Observed misuse due to a locking clip being incorrectly used or not used when necessary was 72 percent. Misuse due to the vehicle seat belt being incorrectly used with a child seat (unbuckled, disconnected, misrouted, or untightened) or used with a child too small to fit the belts was 17 percent.

[5] Hertz (1996), *supra.*

People are not only not using child restraints as correctly as they should, they are also frustrated with the effort needed to attach a child restraint. Consumer clinics conducted in the U.S.[6] and Canada[7] found that virtually all the people surveyed in the studies expressed high levels of dissatisfaction with conventional means of attaching child restraints in vehicles. NHTSA's Consumer Complaint Hotline received approximately 19,792 calls in 1996, 10,326 calls in 1997, and 19,935 in eight months in 1998, from people asking about child seat compatibility with a particular vehicle or how to correctly install a child seat, including requests for step-by-step guidance in installing their child seats. When an article appears in the media about compatibility problems between child restraints and vehicle seats, those calls typically increase to over 500 a day.

NHTSA is concerned that because of frustrations associated with vehicle to child restraint compatibility problems and the difficulties with installing child restraints, consumer confidence in the safety of child restraint systems could be eroding. A consumer clinic held in April 1998 showed that the number one consumer safety concern was with how tightly (secure) participants could get the child restraint installed in the vehicle. NHTSA estimates that about 35 percent of the rear seats of new passenger cars having seat belt anchorages 4 inches or more away from the seat bight. The agency is concerned that declining consumer confidence in child restraint systems could result in less use of child restraints. Being able to tightly secure a child restraint by way of an independent child restraint anchorage system provides consumers with confidence in child restraint safety and has the most potential for the highest, most effective, use of child restraints.

III. Summary of the NPRM

a. What NHTSA Proposed To Address the Issue; Preference for Flexible Latchplate Anchorage System Over the Rigid Bar Anchorage System

As a result of the usage and compatibility problems affecting the installation of child restraint systems in vehicles, NHTSA proposed that vehicles should be required to have a standardized system for attaching child restraints that was independent of the vehicle belts. On February 20, 1997, NHTSA published an NPRM proposing to require vehicles to have an independent ''child restraint anchorage system'' installed in two rear designated seating positions (in vehicles with two or more rear seating position) and to require child restraints to be equipped with a means of attaching to that system (62 FR 7858).[8]

A ''child restraint anchorage system'' was defined to consist of two lower child restraint anchorages at the seat bight and a tether anchorage for attaching a top tether strap of a child restraint system. The lower anchorages could consist of either flexible latchplates or rigid bar anchorages. However, NHTSA considered the flexible latchplate anchorage system to have cost and weight advantages over the rigid bar anchorage system, so the agency favored the flexible latchplate anchorage system by (1) requiring all child restraints to have buckles for the flexible latchplates and by (2) requiring each vehicle having rigid bar anchorages to provide adapters that could accommodate child restraints with the buckles for the flexible latchplates. At the time of the NPRM, Canada was also undertaking rulemaking to require user-ready tether anchorages and NHTSA sought to harmonize with those prospective requirements. (Canada has since adopted its proposal for the tether anchorages. See, section V.d., infra.) The agency's NPRM also proposed reducing allowable head excursion limits in the Federal safety standard regulating child restraint systems, Standard 213, which would have had the effect of requiring most, if not all child restraints to be equipped with an upper tether strap.

The NPRM proposed requirements to specify the construction of the child restraint anchorage system, the location of the anchorages, and the geometry of related components, such as the hardware that attaches to a child seat. To prevent the vehicle anchorages from failing in a crash, the anchorages, including structural components of the assembly, would have had to withstand specified loads in a static pull test.

NHTSA proposed applying the requirement for the flexible latchplate system to all passenger cars, and all trucks, buses and multipurpose passenger vehicles (MPVs) with a gross vehicle weight rating (GVWR) of 4,536 kg (10,000 lb) or less. Each vehicle would have had to have at least two flexible latchplate anchorage systems rearward of the front seat. If a vehicle had no rear seat or had insufficient space to accommodate a rear facing infant seat, and were equipped with an air bag cutoff switch, as original equipment (OE), that deactivates the air bag for the front passenger position, one anchorage system would have had to be provided in that position, and another in a rear seating position to accommodate a forward-facing child restraint. A built-in child seat could have been substituted for one of the systems, but not both, since rear-facing built-in systems are currently unavailable. If there were no switch to turn off the front passenger air bag, installation of an independent anchorage system would not have been permitted in the front passenger seat.

b. Proposed Leadtime

NHTSA believed that the user-ready tether anchorage requirement for vehicles could be made effective at a much earlier date than a requirement for the lower anchorages of the child restraint anchorage system. This was, in part, due to the fact that vehicles already had a tether anchorage structure (e.g., a reinforced hole) at rear seating positions to satisfy current Canadian requirements. The NPRM proposed that the tether anchorage requirement become effective September 1, 1999 for passenger cars and a year later for LTVs. These effective dates were the same ones proposed by Canada for its user-ready tether anchorage requirement. The NPRM proposed that the effective date for reducing Standard 213's head excursion requirement, thereby requiring a tether for most child restraints, would be September 1, 1999.

The agency sought comments on whether a phase-in requirement for the lower anchorages in vehicles would be appropriate, and how long a period is needed for full implementation of the requirement. Comments were also requested on the appropriateness of phasing-in the requirement that child restraints be equipped with the devices that connect to the vehicle child restraint anchorage system.

[6] ''An Evaluation of the Usability of Two Types of Universal Child Restraint Seat Attachment Systems,'' General Motors Corporation, 1996.

[7] ''The ICBC Child Restraint User Trials,'' Rona Kinetics and Associates Ltd. Report R96–04, prepared for the Insurance Corporation of British Columbia, December 1996.

[8] The NPRM was preceded by intensive agency efforts to develop and establish requirements for universal child restraint anchorage systems. For example, the agency held a public workshop in October 1996 to—

- Assess and discuss the relative merits, based on safety, cost, public acceptance and other factors, of various competing solutions to the problems associated with improving the compatibility between child restraint systems and vehicle seating positions and belt systems, increasing child restraint effectiveness, and increasing child restraint usage rates;
- Assess the prospects for the adoption in this country and elsewhere of a single regulatory solution or at least compatible regulatory solutions; and
- Promote the convergence of those solutions.

See NPRM, 62 FR at 7860.

c. NPRM's Estimated Benefits and Costs of the Rulemaking

The NPRM discussed the agency's tentative conclusions about the impacts (e.g., costs and benefits) of a final rule. The annual benefits of the rule were estimated to be 24 to 32 lives saved, and 2,187 to 3,615 injuries prevented.

The NPRM estimated the average cost of a rule requiring the flexible latchplate anchorage system would be approximately $160 million. The cost of the rule for vehicles was estimated to be about $105 million. The cost of the rule related to the vehicle would range, per vehicle, from $3.88 (one flexible latchplate anchorage system in front seat only) to $7.76 (for one flexible latchplate anchorage system in front seat and one in back seat or two flexible latchplate systems in rear seats). NHTSA estimated that 15 million vehicles would be affected annually: 9 million passenger cars and light trucks with ''adequate'' rear seats, 3 million vehicles with no rear seat, and 3 million vehicles that can only accommodate a forward-facing child seat in the rear seat (not a rear-facing infant seat). The cost of the buckle attachments on the child seat was estimated to be about $55 million (3.9 million child restraints (excluding belt-positioning boosters) at $14 per seat.) The rigid bar anchorage system was thought to increase the cost of a child restraint by possibly $100, assuming that the child restraint had to have rigid attachments and a heavy structure to support those attachments.

d. Alternatives Considered

The agency considered and tentatively rejected several alternatives to an independent child restraint anchorage system. Efforts to improve compatibility of child restraint systems and vehicle interior designs first focused on the extent to which vehicle seats and seat belt systems could better perform their dual functions of attaching child restraints and protecting adults, teenagers and older children. The agency evaluated what the industry had developed by way of design tools that would help optimize protection for both the restrained child and older population groups.

The Society of Automotive Engineers' (SAE) Recommended Practice SAE J1819, ''Securing Child Restraint Systems in Motor Vehicle Rear Seats,'' specifies guidelines that vehicle and child restraint manufacturers can use for designing their products with compatibility in mind. The recommended practice specifies a common reference tool, a ''Child Restraint System Accommodation Fixture,'' that both vehicle manufacturers and child restraint manufacturers can use in assessing compatibility. In addition, J1819 provides design values to vehicle manufacturers for certain characteristics of rear seats and seat belts, such as seat cushion shape and stiffness, and seat belt anchorage location, belt length, buckle and latchplate size, and lockability. Likewise, J1819 provides design guidelines to child seat manufacturers for child seat features that correspond to the vehicle features.

NHTSA believed that requiring compliance with J1819 alone would not sufficiently improve compatibility. Most, if not all vehicle and child restraint manufacturers already use J1819 when designing their products. Requiring compliance with J1819 also seemed excessively design restrictive for both vehicle and child restraint manufacturers. It would perpetuate the difficulties vehicle manufacturers have in designing their belts for the dual function of protecting both the child restraint occupant and the adult.

Another approach that NHTSA had taken to improve compatibility was to improve the belt system to specifically require a feature to improve the belt's usefulness with a child restraint system. For vehicles produced beginning in September 1995, NHTSA added a ''lockability'' requirement to the occupant crash protection standard (Standard 208). The rule requires the lap belt to be lockable to tightly secure child safety seats, without the need to attach a locking clip or any other device to the vehicle's seat belt webbing (58 FR 52922, October 13, 1993).

While the lockability requirement ostensibly makes a locking clip obsolete, it still depends on the user knowing enough and making the effort to manipulate the belt system.[9] Also, the vehicle belt must be routed correctly through the child restraint, which may not be an easy task in all cases. Further, the lockability requirement does not address the effects of forward-mounted seat belt anchorages on child restraint effectiveness.

It became apparent that what was needed was for the vehicle system that secured the child restraint system to be independent of the vehicle system that restrained and protected the adult, teenager and older child. This idea originated in Europe where work on a child restraint anchorage system quickly evolved, most notably in the technical committee of the International Organization for Standardization (ISO).

Cosco, a child restraint system manufacturer, suggested an independent child restraint anchorage system that is midway between using the vehicle's belts to attach a child restraint and the child restraint anchorage system developed by groups such as the ISO and adopted today by this final rule. Cosco's ''car seat only'' (CSO) system, consists of an independent lap belt that is installed in vehicle seats separately from the integrated lap/shoulder belts provided for adult passengers. Similar to other child restraint anchorage systems such as the ISO rigid bar system or GM's flexible latchplate system, the CSO is independent of the vehicle's current belt system. Yet, the CSO still uses the design concepts associated with a belt system, e.g., using a belt to wrap through or around the child restraint to latch it into the vehicle. To Cosco, that is the appeal of its system. Cosco believes that the CSO system would not require any changes in the design and manufacture of child restraints and thus would add no increase to the price of child restraints.

To NHTSA, the fact that the CSO system is essentially no different from the historic lap belt means the dissatisfaction many consumers have about the difficulty of attaching a child restraint is likely to be perpetuated with the CSO. NHTSA was concerned that the CSO system might not make attaching a child seat significantly easier than it is today. To NHTSA, a new means of attaching child restraints had to be explored. Commenters responding to the NPRM agreed.

IV. Summary of the Comments

NHTSA received over 70 comments in response to the rulemaking proposal.[10] Because the international community is considering adoption of a standard for a universal, independent child restraint anchorage system, the agency received submissions from foreign governments as well as domestic entities. All commenters agreed with the need for a universal, independent child restraint anchorage system and overwhelmingly concurred with the proposed requirements for a top tether anchorage. However, over half opposed the agency's choice of the flexible latchplate

[9] A typical lockability device is the seat belt retractor that can be converted from an emergency locking retractor (which locks only in response to the rapid deceleration of the vehicle or rapid spooling out of the seat belt webbing from the retractor) to an automatic locking retractor by slowly pulling all of the webbing out of the retractor and then letting the retractor wind the webbing back up.

[10] Comments and other materials relating to the NPRM were submitted to Docket No. 96–095, Notice 03, and Docket NHTSA–1998–3390.

system over the rigid bar anchorage system for the lower anchorage points.

a. Commenters Supporting Flexible Latchplate Anchorage System

The tentative choice of the flexible latchplate system was supported by the Michigan Department of State Police, the Automotive Occupant Restraints Council, General Motors (GM), Advocates for Highway and Auto Safety (Advocates), Indiana Mills and Manufacturing Inc. (IMMI), the Drivers' Appeal for National Awareness (DANA), Gerry Baby Products, and Evenflo Company.[11] (Gerry and Evenflo have since consolidated into one child restraint system manufacturing company.) Several members of Congress sent a letter supporting the flexible latchplate system.[12]

Proponents of the flexible latchplate anchorage system agreed with the agency's tentative conclusions in the NPRM that the flexible latchplate system appeared to be superior to the rigid bar anchorage system because a child restraint equipped with buckles to attach to the flexible latchplates would be less costly, bulky and heavy than a child restraint equipped with rigid attachments. Some commenters supported the flexible latchplate system because they believed that it needs a shorter leadtime for implementation. IMMI, which helped develop the flexible latchplate and buckle, believed that the appeal of its buckle is that it provides a simple, intuitive, easy to use, and familiar hardware concept which will give consumers ''a true sense of security and familiarity that will translate into more [child] seats being used as well as installed correctly.''

Some of the proponents of the flexible latchplate system objected to the rigid bar anchorage system. Based on its belief that there is no buckle that can latch to a round bar, and therefore that such a buckle would have to be developed, IMMI suggested that the rigid bar anchorage alternative would take three to five times as long to implement. IMMI was also concerned that, under the specifications now under consideration by the ISO working committee developing the draft standard for the rigid bar system, the 6 mm bar would be permitted to be located up to 70 mm (2.75 inches) rearward of the seat bight. The commenter believed that locating the bars 70 mm from the seat bight would seriously jeopardize their visibility and/or accessibility. A letter ''strongly opposing the round bar interface'' was submitted by Century Products, Gerry Baby Products, Evenflo Company, Kolcraft Enterprises, and IMMI.[13] The manufacturers stated that the rigid bar anchorage system is unacceptable, arguing that the—

> Rigidly mounted bars would not be visible or accessible inviting misuse or non-use of car seats. No specifications or technology exists for attachment connections to the round bar, and there is no guarantee that these connectors could be available in three to five years or be cost effective.

They were also ''concerned for the long term liability and risk associated with use and performance on rigid systems designed to be used with the 6 mm bar.''

b. Commenters Supporting Rigid Bar Anchorage System

The agency's proposal for making the flexible latchplate system the preferred system was opposed by the United Nations Economic Commission of Europe Group of Rapporteurs for Passive Safety (GRSP), the UK Parliamentary Advisory Council for Transport Safety, the UK Department of Transport, Transport Canada, the New South Wales Roads and Traffic Authority (Australia), Ford Motor Company, Chrysler Corporation, BMW of North America, Mercedes-Benz of North America, Volvo Cars of North America, Insurance Institute for Highway Safety (IIHS), Kathleen Weber of the University of Michigan Child Passenger Protection Research Program (UMCPP), Volkswagen of America, Fisher-Price, Britax Romer, the Millenium Development Corporation, Transport Research Laboratory Ltd. (TRL), Safe Ride News, SafetyBeltSafe, and the University of Kansas Medical Center. The commenters disagreed with the agency's tentative conclusions in the NPRM that the rigid bar anchorage system will be more costly and will add more weight and bulk to child restraints than the flexible latchplate system, and will likely need a longer leadtime to implement. They believed the rigid bar anchorage system and the flexible latchplate system will have similar cost, weight and leadtime impacts when the components that attach to the rigid bars are attached to a child restraint by webbing (some call this type of attachment a ''non-rigid attachment,'' versus a rigid attachment). The commenters further believed that the rigid bar anchorage system is superior because it allows for more design flexibility in what child restraint manufacturers can use to connect their child restraints to the rigid bars; has greater potential safety benefits (for child restraints equipped with rigid attachments) by reducing head excursion in side impacts and by eliminating the need for the parent to tighten belts; and enhances international harmonization of safety standards.

Several commenters stated that the agency's preference for the flexible latchplate system was based on faulty premises, such as the suggestion that hardware interfacing with the rigid bars will not be available in the near future (commenters identified tether hooks as an available, low-cost hardware); and that consumers are more familiar with buckles and latchplates than with an rigid bar anchorage connector. BMW stated that because both the flexible latchplate and rigid bar anchorage systems permit the use of non-rigid attachments on child restraint systems, BMW said there is no cost penalty associated with the latter. The commenter stated that buckles for both the latchplate and the rigid bar interfaces will have virtually the same cost in production quantities. Also, BMW believed that the rigid bar anchorage system could be implemented virtually as quickly as the flexible latchplate design, and within the same leadtime. The Insurance Institute for Highway Safety (IIHS) believed that buckles designed to attach to the rigid bars may cost as little as $1.10 and can be designed and produced in less than one year. As for vehicle costs, VW believed that the rigid bar anchorage system would be less expensive for vehicle manufacturers than the flexible latchplate system. (VW cited NHTSA's October 17, 1996 cost analysis which estimated vehicle costs for the flexible latchplate system to be $11.62, and for the rigid bar system, $7.55.)

Several commenters believed an area where the rigid bar anchorage system is superior to the flexible latchplate system is with regard to the design flexibility of the systems. Kathleen Weber stated that ''The [UCRA] flat plate, which can only be manifested in a soft-supported, protruding configuration, is a short term expedient that offers little opportunity for future

[11] It should be noted that GM and IMMI were instrumental in developing the flexible latchplate system. Century, Evenflo, Gerry and Kolcraft are members of the Juvenile Products Manufacturers Association (JPMA), which joined with GM, IMMI and other manufacturers in petitioning NHTSA to adopt the UCRA system.

[12] The letter, dated May 21, 1997, from U.S. Representatives Constance A. Morella, Steny H. Hoyer, George R. Nethercutt, Jr., Julia Carson and Martin Frost, stated that the flexible latchplate system ''would require no structural changes to new vehicles, and * * * is easy-to-use, employing buckle and latch-plate technology that is familiar to most consumers.'' Comment number 43 in Docket 96–95–N03.

[13] Century and Kolcraft have since informed NHTSA that with certain qualifications, they have decided to favor the rigid bar anchorage system over the UCRA. See section V.a, *infra*.

design improvement.'' Similarly, BMW believed that the flexible latchplate system—

> effectively freezes the current CRS technology * * *. [T]he U.S. public will be forced to endure a system that does not have the flexibility to provide both low cost child restraint systems (with soft attachments) and advanced child restraints with enhanced side impact protection and self-tensioning devices.

Many commenters, including Ford, Volvo, IIHS, the Roads and Traffic Authority (RTA) of New South Wales (Australia) and others, believed that the rigid bar anchorage system is superior to the flexible latchplate system with respect to safety. Ford Motor Company believed that the rigid bar anchorage system would increase child restraint safety over the flexible latchplate system, particularly in side impact crashes, at nearly equivalent cost for child restraint and vehicle manufacturers. RTA stated that, while there is very little difference in frontal crash protection provided by child restraints attached by a flexible latchplate system and by the rigid bar anchorage system, ''[t]he real differences show up when you conduct side impact tests. The rigid CANFIX/CAUSFIX[14] system appears to offer considerable improved performance over the UCRA system and the current Australian attachment system [lap belt and tether].'' The Department of Transport in the United Kingdom stated that ''[w]e fully support the adoption of rigid [6 mm diameter bar] anchorages believing that they will simplify the fitting of CRS, significantly reduce the misuse of CRS, and offer improved dynamic safety performance.'' The commenter expressed concern that the flexible latchplate and the rigid bar are not compatible with respect to their interfaces and that the flexible latchplate system ''does not offer the possibility of a transition to the rigid bar anchorage and the performance advantages it [the rigid bar system] offers.''

Several commenters also believed that the rigid bar anchorage system would enhance child restraint safety in areas other than side impacts, as well. Safe Ride News stated that a rigid bar anchorage system using rigid attachments on the child restraint would minimize misuse by permitting a simple, one-click installation that virtually eliminates adjustment problems. Similarly, IIHS believed that the rigid system (for both vehicle and child restraint system) has the advantage of not requiring parents to tighten any belts. ''Failure to tighten belts sufficiently is a common mistake parents make when using the current child restraint systems * * *.''

Some commenters expressed concerns about potential safety problems with the flexible latchplate system. In commenting in support of the rigid bar anchorage system, Transport Research Laboratory Ltd. (TRL) stated that ''A rigid attachment system [on both the vehicle and the child restraint] offers significant advantages over the soft systems in terms of ease of use and reduction in misuse. A soft attachment system, such as that proposed, while giving good performance when well tightened, will not give good performance when used as user trials suggest they will be used.'' (The commenter did not elaborate on this issue.) Volvo expressed a concern that ''the compressive forces and bending moments resulting from both handling of the CRS and a crash situation may give rise to excessive stresses and strains in the [flexible latchplate]. This is less likely with the round ISOFIX[15] attachments.'' (The commenter did not elaborate on this issue.) Volvo also stated that ''[i]n a test Volvo has performed using the UCRA attachment there have been incidents of unintentional unlatching of the latchplate due to the release button on the latchplate being too close to the adjust seat belt buckle.'' The commenter also stated that the UCRA latchplates may not be accessible for foldable seats after folding and unfolding the seat backs and seat cushions. IIHS also stated that ''using similar technology [to conventional seat belt buckles, as with the UCRA system] is not necessarily advantageous. In user trials, some consumers attempted to use the conventional seat belt latches to attach child seats rather than the designated child restraint latches in vehicles * * *.''

Almost all of the commenters supporting the rigid bar anchorage system argued that adopting that system would further international harmonization of safety standards while adopting the flexible latchplate anchorage system would not. The GRSP of the United Nations Economic Commission for Europe stated that all of the governmental representatives expressing a view on the NPRM supported a move to two point rigid lower attachments. The GRSP stated that ''* * * NHTSA should not encourage a unique national approach in its final proposals.'' Ms. Kathleen Weber, chairperson of the U.S. delegation to the ISO Working Group developing the draft ISO standard, stated:

> It is clear that the European vehicle industry will move quickly to recessed rigid bars for its [lower vehicle anchorages for child restraints], U.S. manufacturers with world platforms will do the same, and such anchors will probably be required in non-US markets within a few years. By requiring the flat plate anchor in the U.S. market, NHTSA will penalize consumers with an extra cost burden and will isolate its child restraint market from the rest of the world.

Similarly, Transport Canada believed that the preferred system worldwide is the rigid bar anchorage system, and thus expressed a concern that the proposal's preference for the flexible latchplate system does not provide for worldwide harmonization.

V. Summary of Post-Comment Period Events and Docket Submissions

a. ISO Working Group Refines and Completes Draft ISO Standard on Rigid Bar Anchorage System

Since the NPRM, ISO Working Group 1 (WG 1) finalized its working documents on the location of the rigid bar anchorages and the test procedure for evaluating them. In the June 1998 meeting in Windsor, Canada, the draft of the Canadian rule concerning requirements for top tether anchorages (see section d, below) was incorporated into WG 1 activities to serve as the basis for the preparation of an ISO document (ISO/WD13216–2) to be part of the ISO standard. The draft ISO standard will be circulated to the ISO member bodies for voting. To be adopted as an ISO standard, it has to be approved by at least 75 percent of the member bodies casting a vote. NHTSA understands that the full committee will vote on the draft international standard in early 1999.

B. Child Restraint Manufacturers Shift Support to Rigid Bar Anchorage System

In June 1998, the agency received letters from child restraint manufacturers Kolcraft, Cosco and Century expressing qualified support for the rigid bar anchorage system. These manufacturers had originally responded to the NPRM strongly opposed to that system but changed their minds apparently after realizing that the rigid

[14] CANFIX and CAUSFIX are the terms that Canada and Australia, respectively, use in referring to a rigid bar anchorage system with a tether anchorage. It is the system NHTSA is adopting today in this final rule. (Footnote added.)

[15] ISOFIX was the name originally used by the ISO working group to describe its rigid bar anchorage system. The ISOFIX design has evolved through the years from a 4-point rigid anchorage concept to a 2-point design. The commenter presumably is referring to the current 2-point anchorage system. For a discussion of the design evolution of ISOFIX, see NHTSA's February 1997 Preliminary Economic Assessment (which is entry 1 in Docket No. 96–95–N3).

bracket connector would not be required for the child restraint system.

These manufacturers stated that they now prefer the rigid bar anchorage system over the flexible latchplate system,[16] provided that the access and location of the anchorages allows design flexibility for either a frame mounted (bracket-based) or a flexible (strap) mounted connector on the child restraint. Factors cited for the change in preference were performance, future child restraint system design flexibility and international harmonization. Century said, however, that the bars have to be accessible and visible. Cosco believed that the cost effectiveness of the rigid bar anchorage system and flexible latchplate system would be approximately equal, and that ''any differences in the using public concerning ease of use and/or desirability of one with respect to the other would soon disappear if such a real difference exists at all today.'' Cosco stated that the rigid bar anchorage system

would help to eliminate certain types of force vectors which may occur within the system of flat latchplates that could be detrimental. It also clearly distinguishes the car seat attachment system from any other hardware that may be near by.

c. Industry Conducts Consumer Focus Group Testing on Which Lower Anchorage System Is Preferred

In April 1998, the American Automobile Manufacturers Association (AAMA) and the Association of International Automobile Manufacturers (AIAM) asked MORPACE International, Inc., to conduct a consumer clinic to determine which of several methods of attaching child restraints consumers in the U.S. find most acceptable. Century 1500 STE Prestige convertible restraints were used as the representative child restraint. The baseline method of attaching the Century seat was the vehicle belt system. This was compared against a flexible latchplate system (with the buckles attached to the child restraint by straps) and a rigid bar anchorage system (with hooks and other connectors attached to the child restraint by straps or by a rigid bracket attachment), and variations of these attachments. A Volkswagen Passat sedan was fitted with a flexible latchplate system and with the rigid bar anchorage system.

The clinic participants were 254 people who were the principal drivers of their vehicle and who care for children 4 years of age or less. Each participant was asked to install the child restraints and then asked about his or her interest in the restraint. Later, the participants were informed of the prices for the restraints and were asked again about their interest in each restraint. The prices MORPACE gave for the baseline child restraint was $63, the child restraint equipped with buckles for the flexible latchplate system was $78, the child restraint with the rigid bracket attachment for the rigid bar system was $128, the rigid bar anchorage strap-based restraint with a snap hook was $73, and the rigid bar anchorage strap-based system with a buckle-type connector to a 6 mm bar was $80.

The following is the percentage of the participants who were very/somewhat interested in the restraints before and after they were informed of the prices. UCRA (78/77 percent); rigid bar anchorage restraint with a buckle attached to it by webbing (67/57 percent); rigid bar anchorage restraint with rigid bracket-based attachment (64/45 percent); and rigid bar strap-based system with snap hook (64/45 percent). After the prices were provided, the UCRA restraint was most preferred (39 percent), followed by the rigid bar anchorage restraint with rigid bracket-based attachment (19 percent), the rigid bar strap-based system with snap hook (15 percent), and the rigid bar anchorage restraint with a buckle attached to it by webbing (14 percent). The study stated that the reason behind the bracket-based rigid bar anchorage option's being rated second instead of first is its higher price and weight. Restraints equipped with variations of these UCRA and rigid bar anchorage connectors also received support, as did the baseline restraint, albeit in smaller percentages. MORPACE prepared a final report on the clinic and its findings, which the agency placed in docket NHTSA–1998–3390.

Following the issuance of the report, a number of motor vehicle and child restraint manufacturers wrote to NHTSA concerning the findings. Copies of these letters have been placed in docket 3390. GM and Indiana Mills Manufacturing Inc. (IMMI) stated that they believed that the clinic showed that consumers' preferences are highly in favor of the flexible latchplate system. GM and IIMI stressed that the clinic showed that consumers are willing to pay the added cost of the flexible latchplate system for added security and performance, but that consumers will not accept the cost and weight of a bracket-based rigid bar anchorage child restraint.

Some manufacturers did not agree that the clinic necessarily showed a preference for the flexible latchplate system. BMW, Volvo, Volkswagen, Mercedes-Benz, Toyota, Fisher-Price and the University of Michigan Child Passenger Protection Research Program believed that the clinic showed that child restraint systems interfacing with the rigid bars had a combined first choice preference of 48 percent, compared to a 40 percent first choice preference for the flat latchplate. Chrysler did not believe it was appropriate to add the proportions of participants who expressed preferences for the rigid bar anchorage variants and to express that sum as a preference for the round bar anchorage. However, Chrysler believed that the clinic's findings are limited in that they reflect consumer views on the ''ease of use'' of a child restraint but not consumer preference for the vehicle anchorages used. Chrysler also reiterated its belief, expressed in earlier comments to the docket, that the rigid bar anchorage system has greater potential safety benefits than the flexible latchplate system.

Ford believed that while it may not be statistically valid to add the percentages of respondents favoring child restraints that attach to the rigid bar anchorages, it would be ''directionally right, in that the [rigid bar anchorages] are more flexible [design-wise] and can be used with a wider variety of child restraints.'' Ford believed that the clinic found that consumers want (1) an alternative way of attaching child restraints, and (2) more than anything, a child restraint that provides safety and security. Ford reiterated its belief that the rigid bar anchorage system is the best vehicle system. Ford said the system provides consumers with a wider variety of child restraints, and is the most immobile, a feature that MORPACE has said signifies to consumers that the seat is secure, which MORPACE says was ''the most important criterion'' for the respondents in evaluating a child restraint.

Century Products stated that it believed that the high preference rating for child restraints designed for the flexible latchplate system is due to the familiarity of the latchplates. The company stated that ''the three designs using the 6 mm rigid bars in the vehicle also showed acceptance by the respondents indicating that the 6 mm bar is acceptable to users.''

A number of these commenters also said that the prototype child restraints used in the clinic were of highly inconsistent quality. For example, some believed that the rigid bar anchorage bracket-based restraint was not representative because it was unrealistically heavy, high, and upright,

[16] Cosco continues to favor the CSO system above all, believing it to be the most cost-effective and quickest to implement.

in order to adapt the unmodified production Century restraint to a rigid bar anchorage base. It was 3.6 kg (8 lb) heavier than the UCRA restraint. They stated that, in contrast, the flexible latchplate restraint and others did not include the weight of any of the reinforcements that are needed for the restraint to meet Standard 213's dynamic test and thus were lighter than would be an actual restraint. They also believed that the vehicle's flexible latchplates used in the clinic were substantially more sophisticated than what the agency had proposed and thus far more costly. Chrysler also said that the $128 price given for the rigid bar anchorage bracket-based child restraint was too high, because costs would be lowered if the bracket mechanism were produced in high volume.

d. Canada Issues Rule on Tether Anchorages

In September 1998, Canada adopted its final rule amending its tether anchorage requirement in section 210.1 of the Canadian Motor Vehicle Safety Regulations. As a result of an effort to harmonize internationally on tether anchorage requirements, NHTSA's proposal on tether anchorages reflected almost all of the provisions that had been proposed by Canada (March 15, 1997) prior to its final rule.

Since 1989, Canada had required that tether anchorages be installed on all passenger cars. However, that requirement did not require tether anchorages to be ''user-ready,'' i.e., it did not require the installation of the hardware necessary for the attachment of the tether strap. Consumers could not use the tether anchorage on the vehicle as delivered from the factory. While Canada required that manufacturers provide a pre-drilled hole in a reinforced location specifically designed for the installation of the hardware, it did not require that such hardware be installed. Consequently, parents typically had to take their vehicle to a dealer or repair shop to have the hardware installed. Canada's new rule requires the factory installation of user-ready tether anchorages for all anchorages in passenger cars manufactured on or after September 1, 1999, and a year later in all minivans and light trucks.

The Canadian rule requires a specified number of tether anchorages, depending on vehicle type and the number of rows or seating positions in the vehicle. Generally, it requires passenger cars and minivans to have two or three anchorages. The rule specifies the zone in which a tether anchorages must be located for a particular seating position. It specifies strength requirements, and a method for testing the strength of the anchorages.

The rule contains a number of changes to the test procedure that Canada had proposed for testing the strength of the anchorages. The proposal would have specified testing the anchorages by attaching a strap to the anchorage and passing that strap forward over the seat back. In response to comments and discussions with manufacturers, Canada changed the test method to specify the use of one of two prescribed static force application test devices. Both represent a child restraint system with a tether. One device replicates a child restraint that attaches to a rigid bar anchorage system. This device will be used to test the tether anchorage in a seating position that has the rigid bar anchorage system. The other represents a child restraint that is attached by the vehicle's belt system, and is used to test a tether anchorage at a position that is not equipped with a rigid bar anchorage system. The test is conducted by installing the test device on the seat using the seat belt or the rigid bars, as appropriate, attaching the tether strap to the tether anchorage, and applying a test force to the child restraint device, rather than directly to the tether anchorage.

VI. Agency Decision Regarding Final Rule

a. Summary of the Final Rule

This final rule requires motor vehicle manufacturers to install child restraint anchorage systems, consisting of lower rigid bar anchorages and a user-ready upper tether anchorage, in their vehicles. The 6 mm round bars in the vehicle seat must be rigidly mounted. Thus, they may not be attached to the vehicle by webbing material. This rule also requires child restraints to be permanently equipped with a means of being attached to the lower vehicle anchorages. It does not, however, specify either the design of the means of attachment or how that means is permanently attached to the child restraint.

This rule requires vehicles to have two child restraint anchorage systems at two rear designated seating positions, if the vehicle has at least two rear seating positions. This rule also requires vehicles with three or more rear designated seating positions to have a user-ready upper tether anchorage at a third rear seating position.[17] It amends the child restraint standard by reducing the limits on allowable head excursion. The agency expects that in order to comply with the reduced limits, most forward-facing child restraint models will be equipped with an upper tether strap. When used, a tether reduces head excursion and the likelihood of head impacts against the vehicle structure.

To provide consumers with the rigid bar anchorage system as quickly as possible, this rule will start a three-year phase-in of the requirements for the rigid bars, beginning September 1, 2000. The bars will ultimately be required in all passenger cars, and in trucks and multipurpose passenger vehicles with a gross vehicle weight rating (GVWR) of 3,856 kg (8,500 lb) or less, and in buses (including school buses) with a GVWR of 4,536 kg (10,000 lb) or less. There will be a two-year phase-in of the user-ready tether anchorage for passenger cars beginning September 1, 1999. The user-ready tether anchorage will be required in the other vehicle types[18] beginning September 1, 2000.

Child restraints will be required to have the components for attaching to the rigid bars beginning September 1, 2002. The restraints will be dynamically tested under Standard 213 when attached by those components to rigid bars on the standard seat assembly specified in the standard. They will be tested both with and without attaching a tether. Child restraints will have to meet a reduced head excursion limit beginning September 1, 1999. A tether will probably be needed to meet this requirement, and one may be attached for the test. Child restraints will also have to meet the standard's existing head excursion limit when tested attached by a lap belt and nothing else, to ensure that head excursion is limited if the tether is not used.

The estimated average cost of this rule is approximately $152 million annually. The cost of the rule for vehicles is estimated to be about $85 million. The costs of the rule related to the vehicle will range, per vehicle, from $2.82 (one rigid bar anchorage system in front seat

[17] If a vehicle has a rear seat with insufficient space to accommodate a rear facing infant seat, and is equipped with an OE air bag cutoff switch that deactivates the air bag for the front passenger position, one anchorage system must be provided in that position, and another in a rear seating position to accommodate a forward-facing child restraint. If a vehicle has no rear seat, and is equipped with an OE air bag cutoff switch that deactivates the air bag for the front passenger position, one anchorage system must be provided in that position.

[18] Because of practicability concerns, convertibles and school buses are excluded from the tether anchorage requirements.

only) to $6.62 (for a system in front seat and one in back seat or two systems in rear seats, plus a tether anchorage). NHTSA estimates that 15 million vehicles will be affected annually: 9 million passenger cars and light trucks with ''adequate'' rear seats, 3 million vehicles with no rear seat, and 3 million vehicles that can only accommodate a forward-facing child restraints in the rear seat (not a rear-facing infant seat). The impact of the rule on child restraint systems is estimated at $67 million (3.9 million child restraints at $17.19 per restraint, based on webbing-attached connectors). The cost per child restraint system varies depending on the type of connector used, e.g., a hook versus a buckle, and the means used to attach the connector to the child restraint system, e.g., webbing versus a rigid attachment.

The annual benefits of the rule are estimated to be 36 to 50 lives saved, and 1,231 to 2,929 injuries prevented.

b. Summary of Key Differences Between NPRM and Final Rule

The main difference between the final rule and the NPRM concerns the lower anchorage portion of the child restraint anchorage system in vehicles. Instead of permitting a choice between lower anchorages of either the flexible latchplate system or the rigid bar system, the final rule mandates the latter system. The NPRM would have allowed vehicle manufacturers the option of installing the rigid bar system only if they provided an adapter, such as a connector (that need not have been permanently attached to the vehicle) that would have had a component on one end that latches onto the rigid bar, and a latchplate on the other, for attaching to buckles on a child restraint that is designed for a flexible latchplate anchorage system. Commenters overwhelmingly opposed an adapter, believing that the adapter would be lost or misused by consumers. On reevaluating this issue, NHTSA agrees that mandating a single system would better ensure that the child restraint anchorage system is universal to all vehicles, for all child restraints, and for all consumers regardless of the type of vehicle or child restraint they may be using for a particular trip.

Second, this final rule requires vehicle manufacturers to rigidly-mount the 6 mm bars. Thus, it does not permit the bars to be attached to the vehicle by webbing, as had been proposed. The purpose of requiring rigid mounting is to maintain better control over the compatibility between child restraints and the anchorage system. However, connectors on the child restraint are permitted either to be attached by webbing, or to be rigidly mounted.

Other differences between this final rule and the NPRM relate to provisions concerning: the types of vehicles and of child restraints that are subject to the requirements; the number of anchorage systems that are required in each vehicle; the visibility and placement of the rigid bars in the vehicle; a requirement for an audible or visual indicator that the child restraint is securely attached to the bars; the strength requirements and test procedures for testing the child restraint anchorage system and the tether anchorage; and leadtime for and a phase-in of the requirements.

VII. Issue-by-Issue Discussion of the Agency Decision on Content of Final Rule

a. NHTSA Determines the Anchorage Systems Are Essentially Equal on the Merits

The agency initially gave preference to the flexible latchplate anchorage system over the rigid bar anchorage system after weighing the abilities of each system to accomplish the goals that the agency believed a uniform attachment system should meet. 62 FR at 7867–7868. NHTSA believed that an anchorage system should:

—Improve the compatibility between child restraint systems and vehicle seats and belt systems, thereby decreasing the potential that a child restraint was improperly installed;
—Ensure an adequate level of protection during crashes;
—Ensure correct child restraint system use by ensuring that the child restraint systems are convenient to install and use, and will be accepted by consumers;
—Ensure that the child restraint systems and anchorages are cost effective and available within a reasonable leadtime; and,
—Achieve international compatibility of child restraint performance requirements for uniform anchorage points.

NHTSA tentatively concluded that the flexible latchplate system would, on balance, best achieve these goals. The agency stated that the rigid bar anchorage system and flexible latchplate anchorage system appeared comparable in terms of safety performance and public acceptance, but the flexible latchplate anchorage system appeared to have advantages over the others with respect to its cost impact, and near-term availability. The agency further stated that the flexible latchplate anchorage system had advantages in terms of its usability and visibility. The agency believed the familiarity of the components (particularly the crucial connector pieces—buckles and latchplates—that attach a child restraint to the vehicle system) was a definite advantage over the other systems. Also, the agency believed that child restraints designed for use with the flexible latchplate system were not as bulky or heavy as child restraints designed for use with the rigid bar anchorage system, which would increase the public acceptance of the flexible latchplate system.

The agency's proposal to give preference for the flexible latchplate system over the rigid bar anchorage system for the lower anchorages was supported by some commenters, but opposed by most commenters in their comments on the NPRM or in their post-comment period submissions. Proponents of the flexible latchplate anchorage system agreed with the agency's tentative conclusions in the NPRM that the system appeared to be superior to the rigid bar system because a child restraint made for the flexible latchplate anchorage system would be less costly, bulky and heavy than a child restraint designed to attach to a rigid bar anchorage system. Some commenters supported the flexible latchplate anchorage system because they believed that a rule based on that system could be implemented more quickly. Some believed that the flexible latchplate system was preferable because its buckle is simple, intuitive, and familiar to consumers. GM argued that the AAMA/AIAM 1998 consumer clinic proved that consumers overwhelmingly prefer the flexible latchplate anchorage system because of its superior installation accuracy and acceptable costs, compared to alternative concepts, including the rigid bar anchorage system.

Opponents of the flexible latchplate anchorage system disagreed with those views. They believed the rigid bar anchorage system and the flexible latchplate anchorage system would have similar cost, weight and leadtime impacts. They stated that the agency's tentative decision to give preference to the flexible latchplate anchorage system was based on faulty premises, such as believing that the hardware interfacing with the rigid bars would necessarily be costly and unavailable in the near-term. These parties strongly disputed that the 1998 consumer clinic showed the flexible latchplate anchorage system had greater public acceptance. In fact, many believed the clinic showed a public preference for systems using the rigid bar anchorage system in the vehicle,

because most of the respondents chose, as their first choice, variations of child restraints that had attachments that were designed to attach to the rigid bar anchorage system. (Forty-eight percent chose child restraints designed to attach to the rigid bars, compared to 39 percent that chose child restraints designed for the flexible latchplate system.)

After reviewing the comments and other new information before it, NHTSA concluded it needed to revise its assessment of the relative merits of the flexible latchplate system and the rigid bar anchorage system. The agency's main reason for proposing to give preference to the flexible latchplate system over the rigid bar anchorage system was information indicating that the installation of rigid bar anchorage systems in motor vehicles would make it necessary for child restraints to be equipped with the following three features: two rigid prongs, or brackets; a heavy supporting structure for those prongs or brackets; and specialized jaw-like clamps to attach to the rigid lower anchorages on the vehicle. This information consisted of statements by the supporters of the rigid bar anchorage system describing the child restraints and of the prototypes or mock-ups they had provided prior to the NPRM. Those prototypes or mock-ups included all three of these features. The addition of these features to child restraints would have had a substantial cost impact on child restraints (essentially doubling the price of a child restraint), and added substantially to its bulk and weight. The agency also believed that manufacturers would need substantial time to design child restraints with the brackets and supporting structure. Further, NHTSA was concerned that consumers would not be familiar with the new technology.

All commenters supporting the rigid bar anchorage system told the agency that the brackets were *not* necessary to attach a child restraint to the rigid bar anchorage system. Commenters, including many child restraint manufacturers, said that a simple hook, made to attach to a rigid bar, could and would be used by many child restraint manufacturers if the rigid bar anchorage system were adopted. The hook could be attached to the child restraint by means of webbing, identical to the attaching of the buckle on a child restraint designed for the flexible latchplate system. After the NPRM was published, some child restraint manufacturers developed prototype child restraints, equipped with hooks, to demonstrate to NHTSA the feasibility of using hooks as the connector hardware and of using webbing for attaching hooks to a child restraint. Further, almost all of the child restraint manufacturers asserted that, if allowed, they would use straps to attach the connector to the child restraint. These assertions apparently reflected their judgment that the use of straps would be practicable and publicly acceptable.

These new prototypes, reinforced by the new assertions of the child restraint manufacturers, changed NHTSA's assessment of the relative advantages of the flexible latchplate and rigid bar anchorage systems. The emergence of straps as a viable means of attaching the connector made it necessary for the agency to reverse its earlier tentative conclusion that a child restraint must have the heavy brackets to attach to a rigid bar anchorage system, and its derivative tentative conclusions about related advantages of the flexible latchplate system concerning the cost, bulk, and weight of child restraints designed for the system.

NHTSA's cost estimates in the NPRM were based on the information indicating that the brackets had to be used on the child restraint system. The high cost of a rigid bar anchorage child restraint, relative to a flexible latchplate child restraint, was mostly due to the material then believed by the agency to be needed for the bracket structure and not to the cost of the hardware connecting to the 6 mm bar. Several commenters stated that buckles designed to attach to 6 mm bars would, as production volume rose, ultimately be comparable to, if not less than, the cost of the buckle of the flexible latchplate system. NHTSA agrees with these statements because the types of components (spring, latch, release button and casing) of current prototype buckles designed to attach to a rigid bar and to the flexible latchplate, are basically the same. Because the same types of components are used in both buckles, it is reasonable to conclude that the cost under similar production assumptions are likely to be similar. Thus, there would be no significant cost difference between a child restraint designed for the rigid bar anchorage system that uses webbing to attach the connector to the restraint and a child restraint designed for the flexible latchplate system. Accordingly, the agency now concludes there need not be a cost advantage to the flexible latchplate system compared to the rigid bar anchorage system.

NHTSA also believes that child restraints designed for the rigid bar anchorage system would be comparable in weight and bulk to child restraints designed for the flexible latchplate anchorage system if they used webbing to attach the connector to the child restraint. The incremental bulk and weight of a rigid bar anchorage child restraint, relative to a flexible latchplate child restraint, was due to the material then believed by the agency to be needed for the bracket structure and not to the hardware connecting to the rigid bar. Accordingly, there need not be an advantage to the flexible latchplate anchorage system over the rigid bar anchorage system in terms of the bulk and weight of the child restraints.

b. There Is Substantial Consumer Interest in Both Anchorage Systems

Supporters of the flexible latchplate anchorage system argue that the AAMA/AIAM consumer clinic shows that consumers prefer their system and that for this reason, the flexible latchplate system should prevail. NHTSA's view of the clinic results is discussed in Appendix B. In brief, the agency cannot conclude that the results clearly warrant the agency's selection of either the flexible latchplate system or a rigid bar anchorage system. The agency recognizes that consumers gave their highest scores to the flexible latchplate design used in the clinic. However, combining the results of the child restraints designed for the rigid bar anchorage system accounted for an even larger number of participants. Further, NHTSA believes that the high score of the flexible latchplate design was at least partially due to the fact that consumers are currently more familiar—and perhaps more comfortable—with the buckle and latchplate design. The agency believes further that once the rigid bar anchorage system and child restraints with the new connectors are introduced, the public will become equally familiar and comfortable with those new designs. Moreover, the agency anticipates that consumers will be receptive to the design flexibility of the rigid bar anchorage system. As discussed below in section d.2., the anchorage system allows them to choose from a variety of connector hardware designs and child restraint systems to satisfy their needs.

c. NHTSA Determines Only One Lower Anchorage System Can Be Selected

The NPRM would have allowed vehicle manufacturers the option of installing the rigid bar anchorage system if they provided an adapter (that need not be integral to the vehicle) that would enable a child restraint that is designed for the flexible latchplate system to be used with the rigid bars. The adapter would have to latch at one end onto the rigid bar and at the other end onto the flexible latchplate system buckle. Commenters overwhelmingly

opposed the concept of an adapter, believing that adapters would be lost or misused by consumers. For example, Toyota Motor Corporation stated that an adapter—

> will further complicate the tightening procedure and therefore securing the CRS will be more difficult. Accordingly, we believe that there will be an increased possibility of misuse, resulting in loose fit and/or improper securing of the CRS to the vehicle. In addition, we believe this will add to the owner's confusion as to how to properly affix this system. * * * In addition, Toyota is concerned as to whether the owner of these vehicles will take the necessary precautions to keep from losing the adapter(s), as any additional loose articles in a vehicle are more likely to be misplaced or lost.

After reviewing the comments, the agency concludes that mandating a single type of anchorage system would ensure that motorists will find the same child restraint anchorage system in all vehicles and that the system will be compatible with all child restraints, regardless of the make or model of vehicle or child restraint they may be using for a particular trip. Allowing use of an adapter might not only perpetuate existing child restraint compatibility problems, but also exacerbate them beyond what they are today. Thus, the agency decided it must choose one, and only one, system to require.[19]

d. NHTSA Selects the Rigid Bar Anchorage System Based on Its Advantages Over the Flexible Latchplate Anchorage System

1. The First Advantage Is Harmonization of Standards

NHTSA's selection of the rigid bar anchorage system advances its international harmonization policy goal of identifying and adopting those non-US safety requirements that reflect equivalent or higher levels of safety performance than the counterpart U.S. standard. Requiring the rigid bar system will enhance the safety of child restraints by making them easier to install and possibly more securely installed than by means of the vehicle's belt system. Further, harmonizing the U.S. standard permits vehicle and child restraint manufacturers to have a greater measure of planning certainty and predictability in designing and selling their products, helps ensure that parents are provided an anchorage system that meets their safety needs at the lowest possible cost, and facilitates the global marketing of child restraints.

NHTSA's selection of the rigid bar anchorage system also accords with its statutory obligations. The Trade Agreements Act of 1979, as amended (July 26, 1979, P.L. 96–39, § 1(a), 93 Stat. 144.) (19 U.S.C. § 2501 *et seq.*), requires Federal agencies to take into consideration international standards and, if appropriate, base the agencies' standards on international standards. In addition, the National Technology Transfer and Advancement Act of 1995 (P.L. 104–113) requires all Federal agencies to use technical standards ''that are developed or adopted by voluntary consensus standards bodies, using such technical standards as a means to carry out policy objectives or activities determined by the agencies and departments.''

The rigid bar anchorage system is the one most likely to be chosen as a harmonized design under the auspices of the United Nations Economic Commission for Europe (UN/ECE).[20] The rigid bar anchorage system is supported by the expert group within WP.29 that considers issues relating to child restraints and vehicles, the Group of Rapporteurs for Passive Safety (GRSP). At the 23rd session of the GRSP meeting of experts in June 1998, the GRSP accepted a proposal for requiring rigid bar anchorages. At the 24th session of the GRSP meeting of experts in December 1998, the GRSP formed an informal group to look into developing a proposal to be presented at the May 1999 GRSP meeting. The proposal is to consist of alternative means, including a top tether, to reduce the possibility of undesirable rotation that might otherwise occur when a child restraint is attached to some vehicle seats by means of the two lower rigid bar anchorages only. The GRSP plans to discuss the proposal during the May 1999 meeting and expects to decide during its December 1999 meeting whether to adopt a means to address the concern of possible undesirable rotation and, if so, which means should be adopted.

The rigid bar anchorage system is also favored in other international forums as well. The rigid bar anchorage system, with a top tether anchorage, is the system preferred by Canada and Australia and is the child restraint anchorage system most likely to be adopted by those countries. Both of these countries already require a user-ready tether anchorage for attaching child restraints.

The International Standards Organization (ISO) also appears to be moving toward adoption of the rigid bar system. The ISO working group that has been developing the rigid bar anchorage system is completing its working documents on the system and is preparing to circulate the draft standard to the ISO member bodies for voting. The ISO working group circulated a committee draft report for voting. The ballots received by the deadline of May 4, 1998 showed that no country disagreed to circulate a draft of the international standard to the ISO Central Secretariat for ballot. (The U.S. abstained from voting because agreement has not been reached within the U.S. domestic auto industry on the use of rigid versus flexible anchorages.) NHTSA understands that the full committee will vote on the draft international standard in the near future. To be adopted as an ISO standard, the draft has to be approved by at least 75 percent of the member bodies casing a vote.

2. The Second Advantage Is Enhanced Design Flexibility Which Provides a Reasonably Predictable Prospect for Design Improvements That Will Enhance Either Safety or Public Acceptability or Both

The rigid bar anchorage system encourages design flexibility to a greater extent than the flexible latchplate anchorage system. The rigid bar anchorage system has the advantage of allowing child restraint manufacturers flexibility in developing a variety of possible connectors to the bars. Unlike the flexible latchplate system, which envisions a specific design of a buckle to connect to the latchplate, the rigid bar anchorage system gives child restraint manufacturers maximum leeway in

[19] In the NPRM, the agency discussed its tentative conclusion that J1819 and FMVSS No. 208's lockability requirement were insufficient as alternative solutions to an independent child restraint anchorage system. The agency did not receive any comments opposing this. The agency also tentatively rejected Cosco's CSO system as an alternative to the proposed child restraint anchorage system. Cosco commented in disagreement with the agency. NHTSA's final decision declining to use the CSO system is explained in Appendix A to this final rule.

[20] The UN/ECE Working Party on the Construction of Vehicles (WP.29) administers an agreement, known as the 1958 Agreement, concerning the adoption of uniform technical prescriptions for wheeled vehicles, equipment and parts and develops motor vehicle safety regulations for application primarily in Europe. (While U.S. officials actively participate in WP.29 and thus participate in the development of standards, the United States is not a Contracting Party to the 1958 Agreement. Thus, it cannot vote on whether a regulation is to be adopted by the Contracting Parties.) Various expert groups within WP.29 make recommendations to WP.29 as to whether regulations should be adopted as ECE regulations. WP.29 in turn makes recommendation to the Contracting Parties to the 1958 Agreement. It is ultimately the Contracting Parties that vote on whether a recommended regulation is to be adopted under the Agreement as an ECE regulation.

designing connectors.[21] For example, child restraint manufacturers may use designs ranging from jaw-like clamps to buckles to simple hooks, and may attach these to the child restraint using means ranging from brackets to webbing. A number of child restraint manufacturers support the rigid bar system because of its design flexibility.

The design flexibility of the rigid bar system also has implications for potential improvements in the safety provided by child restraints. For example, Century Products has indicated that the rigid bar system could enable them to design booster seats (a type of child restraint system, see 49 CFR 571.213, S4) for children over 18 kg (40 lb) that could better limit head excursion than present boosters. A rigid attachment on the booster restraint might reduce some of the excessive forward motion that a child restraint attached to the vehicle seat by a belt experiences when tested with a 6-year-old dummy, due to elongation of the belts.

Consumers would also benefit from design flexibility, in that they could choose from a variety of child restraint systems to purchase to suit their needs or tastes. For some, a one-step ''plug-in'' design, such as that seen on Britax prototypes with rigid connectors, might be the most convenient or desirable, while others may prefer a child restraint that has a connector attached by webbing because such a system would weigh and cost less than restraints that have rigid connectors.

3. The Third Advantage Is Possible Safety Benefits

The NPRM stated that both the flexible latchplate anchorage system and the rigid bar anchorage system have performed satisfactorily in dynamic tests, which implied that both would provide comparable levels of safety. Supporters of the rigid bar anchorage system disagreed with the agency, suggesting that that system has the potential to better protect children with regard to two aspects of safety.

The first safety aspect concerns the relative performance of the systems in side impacts. Michael Griffiths and Paul Kelly of the Roads and Traffic Authority (RTA), New South Wales, Australia, submitted data on side impact sled tests RTA conducted comparing the performance of the CAUSFIX system (CAUSFIX is the rigid bar anchorage system with a tether anchorage, which is the system NHTSA is adopting in this final rule, *see* footnote 13, *supra*), the flexible latchplate system, and a lap belt plus tether system. (''Comparative Side Impact Testing of Child Restraint Anchorage Systems,'' Kelly, Roads and Traffic Authority, New South Wales, Special Report 96/100, March 1997.) The side impact tests were conducted in accordance with Australian Standard (AS) 3691.1, except for the addition of a simulated door structure, replicating a rear door of a large sedan, adjacent to the test seat. Testing was conducted with the test seat mounted at both 90 degrees and 45 degrees to the direction of sled travel. The lower anchorage points for the CAUSFIX were positioned 280 mm (11 inches) apart on the test seat structure, with the inboard anchorage approximately 610 mm (24 inches) from the inner surface of the door. An instrumented 9-month-old dummy was used in all the tests.

RTA found that, for forward-facing seats,[22] only the CAUSFIX was able to prevent contact between either the dummy's head or the child restraint and the door structure in the 90 degree test. RTA stated that head contact with the door was evident in the test involving the flexible latchplate system.

> This appeared to be largely the result of the restraint rotating towards the door at the end of its sideways movement. As a consequence, the dummy's head moved forward relative to the CRS [child restraint system] and contacted the front portion of the side-wing. In turn, the side-wing deflected and allowed the head to roll around its front edge, as the CRS rebounded from the door * * *. In contrast, the CAUSFIX system did not allow rotation * * *. The CAUSFIX concept offered better head protection compared to the conventional seat belt/top tether systems.

(*Id.*, page 5.)

Many of the supporters of the rigid bar anchorage system included comments on their belief that side impact benefits could be attained with the system. In contrast, GM stated in its comment (pp. 10–11):

> It has been alleged that the proposed combination of UCRA anchorages and a strap-based CRS may not provide adequate protection in a high severity lateral impact. However, no field accident statistics have been provided to support an allegation that high speed lateral impact performance should be a primary area of concern in the U.S. In fact, data analyzed by NHTSA researchers demonstrate that the primary child safety issue is the non-use of CRSs. A secondary concern is misuse of the CRS. Misuse includes failing to properly fasten the CRS's internal harness system or improperly securing the CRS in the vehicle.
>
> While various groups continue to develop proposals for lateral impact test protocols and related dummy and injury assessment techniques, it appears unlikely that consensus on these topics will be reached for years. The continued debate should not delay implementation of improved CRSs and UCRA systems. This is particularly true since it is not apparent that the current U.S. field situation demonstrates a need for a side impact crash evaluation protocol. Further, it has not been established that lateral dummy head excursion is a meaningful predictor of injury in side impacts. Even if it were, NHTSA tests have shown that the existence of a top tether reduces lateral head excursion by one third compared to a current CRS secured without a top tether * * *.

NHTSA has evaluated these and all other comments on this issue and concludes that the agency cannot make a precise determination of the relative side impact benefits based on the information available thus far. The RTA's test data were few in number. Further, the real world relevance of the 90 degree test is unclear at this point. NHTSA does not know if the path of a child's head in a 90 degree impact will necessarily be lateral. The path will depend on a variety of factors, including the speed of the struck vehicle, and the point of impact to the struck vehicle (forward part, middle, rear part). Further, NHTSA cannot determine at this time whether reduced head excursions would necessarily reduce injuries and fatalities in side impacts. Crash data should be analyzed to determine answers to these issues. The agency has been working with the ISO working group on the development of a side impact test procedure. NHTSA will be taking part in an evaluation of the side impact test protocols in the future. For now, however, the agency cannot conclude that the rigid bar anchorage system is more advantageous than the flexible latchplate system in side impacts.

The second aspect of safety on which proponents of the rigid bar anchorage system commented was that the combination of rigid lower anchorages

[21] Some opponents of the rigid bar anchorage system were concerned that Britax may hold a patent on a specific ''jaw'' type of connector and could restrict the free use and development of the connector by other manufacturers. In communications between Britax and NHTSA, Britax has repeatedly stated that it does not hold a patent on the connector. The agency has reviewed copies of patents 5,524,965, 5,487,588 and 5,466,044 which Britax submitted to NHTSA, and agrees with Britax that it did not have a patent on the connector itself. (The patents were for various designs of child restraints that had the jaw connector.) In further response to a request by NHTSA, by letter dated August 10, 1998, Britax informed the agency that it has filed a Terminal Disclaimer to waive all patent rights to ISOFIX connectors described in patents 5,524,965, 5,487,588 and 5,466,044. A copy of this letter has been placed in the docket. The effect of Britax's action is to dedicate these patents to the public, thus waiving any patent protections it may have for these patents. This puts to rest the concerns that were raised about Britax possibly restricting the free use of development of the connector.

[22] The rear-facing seats were tethered. Because today's rule does not require rear-facing infant seats to have a tether, this discusses only the tests of the forward-facing seats.

on both vehicles and child restraints would virtually guarantee that the child restraint would be snugly attached to the vehicle seat. Commenters stated that studies and informal clinics have shown that consumers regularly fail to properly tighten the belt used to install child restraints. With a rigid bar anchorage system on both the vehicle and the child restraint, the child restraint is secured automatically once the consumer properly attaches the two rigid points of the seat, so there is no need for a separate tightening action by the consumer. Conversely, GM stated that concerns about parents not tensioning the flexible latchplate belts are unfounded, based on the findings of GM's consumer preference clinic (GM did not elaborate on those findings).

A number of consumer advocates urged NHTSA to adopt the rigid bar anchorage system because they have witnessed that parents often do not adequately tighten the vehicle belt attaching the child restraint to the vehicle. A child restraint with rigid attachments designed to attach to rigid bar anchorages in the vehicle would eradicate the problem of excessive slack in the belts.[23] By adopting the rigid bar anchorage system, this final rule provides consumers the rigid bar anchorage system in the vehicle and provides them the opportunity to purchase a child restraint with the rigid attachments if they want the more convenient system.

e. NHTSA's Final Rule Is Not Identical to the Draft ISO Standard

This final rule adopts most of the requirements under consideration by the ISO, adopts some that are not part of the ISO draft standard, and adopts some requirements that are dissimilar to those under consideration by the ISO. These are discussed below. Other differences with the draft ISO standard are discussed throughout this section (VII).

4. Bars May Not Be Attached to the Vehicle by Webbing Materials

The NPRM proposed to permit vehicle manufacturers to install ''semi-rigid'' anchorages in vehicles for the child restraint anchorage system. Semi-rigid bar anchorages refers to 6 mm bars that are attached by non-rigid material (webbing), extending from the vehicle seat bight. Semi-rigid bar anchorages basically look like the anchorages of the flexible latchplate system, except with a 6 mm round bar attached to the end of the webbing instead of a latchplate. The term ''semi-rigid anchorages'' is from the draft ISO standard (ISO/22/12/WG1, June 1998, Annex A), which permits vehicle manufacturers the option of installing semi-rigid bar anchorages as an interim alternative to the anchorages that are rigidly held in place. The draft ISO standard permits the use of semi-rigid bar anchorages for a limited period of time as an interim measure to address the concerns that had been expressed by some U.S. vehicle and child restraint manufacturers toward rigid bar anchorages. NHTSA's proposal allowed semi-rigid anchorages to harmonize to the extent possible with the version of the prospective ISO standard.

After reevaluating this issue, NHTSA has decided to require vehicle manufacturers to rigidly mount the 6 mm bars. Thus, bars may not be attached to the vehicle by webbing, as had been proposed. The agency made this decision to maintain better control over the compatibility between child restraints and the anchorage system. Requiring one type of attachment system on the vehicle (i.e., requiring the 6 mm bars to be rigidly mounted) better standardizes the vehicle anchorage system, which reduces the potential for confusion on the part of parents (who might be confused if they are looking for or expecting one type of anchorage system and come across another), and the misuse that typically results from confusion.[24] To determine whether a bar is ''rigidly'' mounted to the vehicle, this final rule specifies that the bar must be attached to the vehicle such that it will not deform (e.g., elongate, move, or deflect) when subjected to a 100 Newton (N) force in any direction. To further standardize the system, this final rule limits the length of the bars to not less than 25 mm, but not more than 40 mm. The upper limit is to reduce the likelihood that the bars may bend in a crash.

Even if NHTSA had decided to give vehicle manufacturers the option of installing non-rigidly mounted bars, it appears that they would not take advantage of that opportunity. Vehicle manufacturers supporting the rigid bar anchorage system did not indicate in their comments or other submissions that they would install non-rigid bar anchorages. NHTSA believes most, if not all, want to install the rigid bar anchorages. They emphasized what they believe to be superior side impact performance attributed to the rigid bar anchorage system, which can only be attained by use of a rigid system. They liked the fact that the rigid bar anchorage system did not give the appearance of ''clutter'' on vehicle seats from sets of child restraint anchorage belts and latchplates. Further, it appears that the provision for semi-rigid anchorages was included in the ISO draft standard to address what the working group believed was a desire to use such anchorages in this country. The Group of Experts on Passive Safety of the ECE stated in commenting on the NPRM that ''[t]here is no benefit in Europe opting for a semi-rigid system as an interim step.'' NHTSA understands this to mean that European manufacturers are not interested in installing semi-rigid anchorages as an interim step prior to the installation of rigid anchorages.

2. The Bars Must Be Visible or the Vehicle Seat Back Marked To Assist Consumers in Locating Them

While NHTSA has departed from its proposal in order to harmonize with revised location and visibility/marking requirements for rigidly-mounted anchorage bars in the draft ISO standard, the agency has not followed that draft standard in all respects. In the NPRM, the agency proposed location requirements for rigidly-mounted 6 mm bar anchorages. The location requirements were based on requirements developed in draft by the ISO working group in ISO/WD13216–1i, November 15, 1996. The NPRM proposed that the 6 mm diameter bars would be located using a child restraint fixture whose configuration and dimensions replicate a child restraint system. (The NPRM referred to the fixture as the ''child restraint apparatus.'' For convenience, and in response to VW's suggestion in its comment, this final rule uses the term ''child restraint fixture'' (CRF), which is the term used in the draft ISO standard.) The CRF would be placed on the vehicle seat cushion and against the seat back. Anchorage bars that are rigidly attached were proposed to be located 50 mm (about 2 inches) behind of the rearmost lower corner surface of the fixture (called point Z). They also must not be more than 120 mm from the H point of the seating position. (The H point is the mechanically hinged hip point of a

[23] Some commenters suggested that NHTSA require automatic retractors on child restraints that use webbing to attach the connector, such as child restraints using webbing to attach the connector to the rigid bar. NHTSA estimates that the consumer cost of a retractor would be $2.50 to $3 per retractor, or $5 to $6 per child restraint. To minimize the cost impacts of this rule, NHTSA has decided not to require automatic retractors on child restraints.

[24] Connectors on the *child restraint* are permitted to be attached by webbing, or they may be rigidly mounted. Design flexibility in attaching the connector to the child restraint enables child restraint manufacturers to better tailor their products to meet consumer demand, and reduces the cost impact on consumers purchasing child restraints.

manikin which simulates the actual pivot center of the human torso and thigh. See definition, 49 CFR § 571.3.)

In its June 1997 draft revision of the ISO standard, WG1 changed the rearward location requirement to specify that rigidly mounted bars shall be not more than 70 mm (2.7 in) behind point Z. (The limit on the forward placement of the bars was not changed.) This specification is reflected in the June 1998 draft standard. The distance for the fore-aft placement of the bars was increased from 50 mm to 70 mm (2 to 2.7 in) to make allowances for extremely contoured rear seats in some types of sport cars. Contoured seat cushions or seat backs in these vehicles may make it difficult to place the bars within 50 mm (2 in) of the CRF without having the bars be so far forward in the seat bight that they interfere with the comfort or safety of adult occupants.

Some commenters (Century, Gerry Baby Products, IMMI, Evenflo, and Cosco) were concerned about the visibility and accessibility of the bars at the seat bight. Other commenters pointed out that the ISO working group would be revising its draft standard and suggested that NHTSA should reference the location requirements of the revised draft standard.

After evaluating the comments, NHTSA has decided to adopt the limits on the forward (not more than 120 mm from the H-point of the seating position) and rearward (not more than 70 mm behind point Z) placement of the bars in the current draft ISO standard. The agency has determined that the 70 mm distance is needed to ensure that the bars are rearward enough in vehicles with contoured cushions to limit excessive head excursions for children in a crash [25] and to avoid injuring the person occupying the vehicle seat in a crash or interfering with his or her comfort during normal vehicle operation. At the same time, the agency is mindful of the concerns of child restraint manufacturers that the child restraint anchorage system must be visible and accessible to be properly used.

NHTSA believes that most vehicles, except those with highly contoured seats, will have the bars 50 to 60 mm (2 to 2.4 in) from the CRF. At this distance, the agency believes that the bars would generally be visible at the seat bight without compressing the seat cushion or seat back.

The final rule requires that vehicles in which the bars are not visible must have a permanent mark on the vehicle seat back at each bar's location. The permanent mark required by this final rule is a small 13 mm (½ inch) diameter circle in a color that contrasts with the seat material and that is located above each individual anchorage, to help users locate and use the bars. The mark will indicate the presence of the anchorage system and act as a guide showing where to engage the bars. Consumers may not otherwise learn of the existence of a child restraint anchorage system in a particular vehicle or at a particular seating position in a vehicle without some type of visual reminder that the anchorage system is present. Even when they know the bars are present, they may not know precisely where in the seat bight to look for the bars. NHTSA notes if vehicle manufacturers do not want to mark their seats for esthetic or cost reasons, they need not do so if they install the bars such that there is an unobstructed view of the bars at an angle of 30 degrees from a horizontal plane tangent to the seat cushion.

This visibility requirement is significantly different from the one that NHTSA proposed and somewhat different from the visibility requirement in the draft ISO standard. In the NPRM, NHTSA proposed that, for rigid bar anchorages, *inter alia*, at least one lower anchorage bar shall be readily visible to the person installing a child restraint. That proposal was based on the ISO draft version in existence at the time. The ISO working group changed those requirements in the June 1997 draft version to specify that, wherever possible, at least one lower anchorage bar, one guidance fixture, or one seat marking feature (significantly larger than the one specified in NHTSA's final rule) shall be readily visible to the person installing the child restraint. NHTSA has determined that the proposed visibility requirement for the bars would have likely precluded vehicle manufacturers from placing the bars at the maximum 70 mm distance from the CRF, since at that distance the bars may not be visible. As stated above, the bars may need to be placed at the maximum distance on extremely contoured seats for the safety and comfort of adult passengers seated in that seating position. Because of this, the agency is not adopting its proposal that at least one of the bars has to be visible.

The NPRM requested comments on whether the webbing attaching the anchorage hardware on the child restraint should be color coded to distinguish the webbing from the straps comprising the harness for the child. A number of commenters supported color coding, while others did not. The agency has decided not to require color coding of the attachment system at this time. The Insurance Corporation of British Columbia (ICBC) and IMMI report contrasting experiences with regard to the propensity of clinic participants to confuse the webbing attaching the buckles of the flexible latchplate system to the child restraint with the webbing of the child restraint's internal harness. NHTSA notes that intermixing appears to be far less likely with the rigid bar system than with the flexible latchplate system because the types of connectors used to attach to the rigid bars are not likely to look like the buckles used for the child restraint harnesses.

3. A Tether Anchorage Is Not Required by the Draft ISO Standard, but Is Required by This Final Rule

The NPRM proposed to require user-ready top tether anchorages in vehicles. The draft ISO standard does not at this time include a provision for tether anchorages. Some supporters of a rigid system on both vehicles and child restraints believe that some restraints made to attach to the vehicle by means of a rigid attachment can meet a more stringent head excursion limit without a tether.

Test data show that an attached tether substantially improves the ability of a child restraint to protect against head impacts in a crash, when the child restraint is attached to the vehicle seat by the belt system or by a flexible latchplate anchorage system. In the U.S., parents have not attached the tethers in vehicles that lack a user-ready tether anchorage. However, Canada's experience indicates that parents are more likely to attach the tethers when a user-ready tether anchorage is factory-installed. Overall, commenters to the NPRM agreed with the agency that consumer-ready tether anchorages in vehicles are needed to increase the likelihood that consumers will attach a tether. For these reasons, and because a large proportion of child restraints will likely be attached to the child restraint anchorage system by webbing material, NHTSA believes there is good reason to require a user-ready tether anchorage in vehicles. The agency notes that the requirement for a user-ready tether anchorage will harmonize with Canadian requirements adopted in September 1998.

f. The Types of Vehicles That Are Subject to the Adopted Requirements

The NPRM proposed to apply the requirement for a child restraint anchorage system to passenger cars, and

[25] For a discussion of the interaction of child restraints and forward-mounted anchorages, see the NPRM, 62 FR at 7859, columns 1–2.

to trucks, multipurpose passenger vehicles and buses under 4,536 kg (10,000 lb) gross vehicle weight rating (GVWR). The agency had tentatively decided to include vehicles with a GVWR between 3,856 and 4,536 kg (8,500 and 10,000 lb) in an effort to ensure that such a child restraint anchorage system would be available in vehicles used to transport children to child care programs.

Commenters on the proposed applicability of the rule discussed whether there was a need to apply the rule to all vehicles above 3,856 kg (8,500 lb) GVWR. The Automotive Occupant Restraints Council (AORC), GM and Chrysler believed that the requirement should not apply to vehicles above 3856 kg (8,500 lb) because most vehicles in the 3856 to 4536 kg (8,500 to 10,000 lb) category are for commercial applications other than passenger transport. AORC said that if NHTSA wishes to apply a rule to vehicles above 3,856 kg (8,500 lb) to regulate vehicles used for child care programs, the agency should apply the rule to school buses and not to all vehicles greater than 3,856 kg (8,500 lb).

The Mobile Teaching School Bus Project of Indiana University commented that a final rule should also apply to large school buses (over 4,536 kg (10,000 lb) GVWR) to address issues relating to the transportation of infants, toddlers and preschoolers on school buses. The American Academy of Pediatrics also said that all school buses should be subject to the rule. In contrast, the Lake Cumberland Head Start expressed concern that applying the rule to school buses would ''skyrocket the cost of a new bus'' and could have a very detrimental effect on the Head Start program budget. The National Association of State Directors of Pupil Transportation Services expressed concern whether the agency would be justified in applying the rule to school buses. Chrysler questioned whether the proposed rule would be appropriate for school buses, believing that a requirement for only two child restraint anchorage systems ''would hardly meet the needs of the users.'' Chrysler said that anchorage systems could be specified as a matter of contract on the part of individual school bus purchasers.

After reviewing the comments, NHTSA has decided to limit the applicability of the rule to passenger cars and to MPVs and trucks with a GVWR of 3,856 kg (8,500 lb) or less, and to buses (including school buses) with a GVWR of 10,000 lb or less. The agency is not applying the rule to other vehicles with a GVWR in the 3,856 to 4,536 kg (8,500 to 10,000 lb) range because most vehicles in that range typically do not carry child restraints. The agency is not applying the rule to school buses with a GVWR greater than 4,536 kg (10,000 lb) because this was not proposed, and the agency has not had the benefit of full and meaningful comment on this issue.

Buses with a GVWR of up to 4,536 kg (10,000 lb) are included in the final rule because they are regularly used to transport children small enough to be in child restraints. Chrysler believed that a requirement that specifies only two child restraint anchorage systems on buses used to transport children to child care programs would not meet the needs of the care givers. NHTSA urges purchasers who anticipate that they will be needing more than two child restraint systems in their vehicles to order their vehicle with the additional child restraint anchorage systems necessary to meet their needs. The agency has drafted this final rule to apply the standard's configuration, location, strength and marking requirements to any additional voluntarily-installed rigid bar anchorage system installed on a new school bus, or on any other vehicle. This is to ensure that children will be provided the same high level of crash protection no matter which particular child restraint anchorage system they may be using at the time of a crash. The configuration, location, strength and marking requirements will apply to any rigid bar anchorage system installed on a new vehicle beginning September 1, 1999.

g. The Number of Anchorage Systems That Are Required in Each Vehicle

In the NPRM, the agency proposed to require a child restraint anchorage system at each of two rear seating positions. The NPRM did not specify which rear seating positions would have had to be equipped with the anchorage systems. As a practical matter, manufacturers were likely to install the anchorages in the two outboard positions because the anchorages could best fit there in most passenger cars. It would be difficult to fit anchorage systems side-by-side, e.g., in the center rear seat and at an adjacent outboard seat in small vehicles. The agency requested information from commenters on whether there is information indicating a need for an anchorage system at more than two positions, such as demographic data on the number of children who are typically transported in child restraints in a family vehicle.

Many commenters addressed the issue of how many seating positions should have a child restraint anchorage systems. Most of them recommended that either all rear seating positions in cars should be so equipped, or at least an additional (i.e., third) tether anchor should be required. Presumably, as a practical matter, the additional tether would be installed in the rear center position. A few commenters submitted demographic data to support their position that more than two anchorage systems are needed in vehicles. However, these data did not show that there were a significant number of families with three or more children in child restraints. To minimize the cost of this rule, this rule adopts the proposal for two full child restraint anchorage systems.

However, NHTSA is requiring that if a vehicle has at least three designated seating positions in the rear seat or second and third row of seats, another seating position, other than an outboard position, shall be equipped with a user-ready tether anchorage. This requirement addresses the concerns of many commenters that the center rear seating position in cars would not have an improved means of attaching child restraints, even though that is the position preferred by many adults to place a restraint. In the typical family car with three rear seating positions, the center rear seating position would thus have a tether anchorage in addition to the lap belt (and in more and more cars, a lap and shoulder (Type II) belt), to give consumers flexibility in where they choose to restrain their children. NHTSA is not requiring that one of the two independent anchorage systems be placed in the rear center position in a vehicle having such a seating position because, as explained above, it may be difficult to fit the lower anchorages of two child restraint anchorage systems, or two child restraint systems, adjacent to each other in the rear seat of small vehicles.[26] The final rule also requires that, in vehicles with three or more rows of seating positions, at least one child restraint anchorage system must be at a seating position in the second row. Some parents may want to place the child restraint in the second row rather than further back in the vehicle to comfort or supervise the restrained child from a closer distance. This requirement ensures that a child restraint anchorage system will be available in the second row to such a parent.

[26] NHTSA is allowing manufacturers to install one built-in child restraint system in lieu of one of the required tether anchorages or one of the required child restraint anchorage systems. A built-in child restraint system is a child restraint system that is a permanent and integral part of the vehicle. See S4, 49 CFR § 571.213.

To better ensure that a vehicle's designated seating position and child restraint anchorage system on that seat will be able to fit a child restraint, this final rule requires the vehicle to be designed such that the CRF can be placed inside the vehicle and attached to the lower anchorages of the child restraint anchorage system. If the CRF cannot attach to the child restraint anchorage system, the vehicle cannot be certified as meeting Standard 225, the standard adopted today for child restraint anchorage systems. When testing for compliance with this requirement, NHTSA will place adjustable seat backs in the manufacturer's nominal design riding position in the manner specified by the manufacturer. The nominal design riding position should be the same position that the manufacturer recommends in its instructions to parents. Adjustable seats will be adjusted to their full rearward and full downward position.

This final rule requires that any tether anchorage or child restraint anchorage system installed in a new vehicle must meet the configuration, location and strength requirements of the standard. This requirement applies to voluntarily-installed anchorages that are installed in a new vehicle in addition to those required by the standard. This is to better ensure that the anchorages will perform adequately and that a child will be assured a requisite level of performance no matter which tether anchorage or child restraint anchorage system is used. These requirements will apply to any child restraint anchorage installed on a new vehicle beginning September 1, 1999.

h. Lockability Requirement Will Be Retained Until 2012

The NPRM requested comment on whether the ''lockability'' requirement in S7.1.1.5 of Standard No. 208, ''Occupant Crash Protection'' (49 CFR 571.208) should be deleted as unnecessary if requirements for a child restraint anchorage system are adopted. The agency wished to explore whether a lockability requirement may not be needed for a seating position with a universal anchorage system since the vehicle's belt would no longer be used to attach a child restraint with attachment devices. On the other hand, the agency also recognized that lockability might be needed to attach child restraints that are not equipped with attaching devices, even if the vehicle seat has such a system.

Graco, SafeRide News, AORC, GM, Indiana University, Advocates, Ford, Chrysler and the Center for Auto Safety commented on this issue. All of these commenters said that vehicle seats with a child restraint anchorage system should still be subject to the lockability requirement to meet the needs of parents using a child restraint that is not equipped with attachment devices. GM and Ford suggested that lockability could be deleted some time after all child restraints are equipped for the child restraint anchorage system.

The agency agrees that the lockability requirement should be retained until virtually all child restraint systems in use have the attachments that connect the restraint to the child restraint anchorage system. Until then, the vehicle belts should be lockable to use with a child restraint that is not equipped with attachment devices. The agency believes that, on average, child restraints are used not more than 10 years. Under today's rule, all new child restraints will be required to have attachments that connect to the child restraint anchorage system beginning in 2002. Because child restraints last on average about 10 years, by 2012, most child restraints in use will be able to use the child restraint anchorage system and will not need lockable belts. This rule rescinds the lockability requirement beginning September 1, 2012. The requirement is rescinded on that date for just those seating systems with a child restraint anchorage system, and not for all seats.

GM and Ford also suggested that the lockability requirement be deleted for the air bag equipped right front passenger seat, in light of the NPRM's proposal to disallow a child restraint anchorage system in that position in vehicles that lack an OE on-off switch for the air bag. NHTSA has decided not to delete the requirement at this time. Notwithstanding the efforts of the agency, industry, State and local officials and safety advocates to urge parents to place children in the rear seats, some parents may decide to place toddler seats in the front passenger seat with an air bag, or with an air bag and an on-off switch. In that situation, the lockability of the lap and shoulder belts would help ensure that the belt holds the child restraint system as tightly as possible against the seat back of the front seat, as far away as feasible from the air bag and the relatively hard structure of the dashboard. Lockable belts may be distinguished from a standardized, independent anchorage system in that the presence of the latter implies, more than a lockable belt whose lockability feature is not obvious, that the seat is appropriate for a child restraint system. This may not be the case if an air bag is present.

On September 18, 1998, NHTSA published an NPRM proposing to upgrade the agency's occupant protection standard to require advanced air bags (63 FR 49958). The agency proposed to add new requirements to prevent air bags from seriously injuring children and other occupants. When the final rule on that rulemaking is issued, NHTSA will possibly delete the requirement in today's final rule that an independent child restraint anchorage system must not be in the front seat of a vehicle that lacks an OE on-off switch and the related requirement concerning the lockability provision applying to that seating position. This issue will be addressed at the appropriate time in the context of that rulemaking.

i. Strength Requirements for Lower Rigid Bars of Child Restraint Anchorage System and Compliance Test Procedures

In the NPRM, the agency proposed that each lower anchorage would be tested separately by applying a force of 5,300 N (1,190 lb) to the anchorage in the forward horizontal direction parallel to the vehicle's longitudinal axis. The force would be applied by means of a belt strap that is fitted at one end with hardware for applying the force and at the other end with hardware for attaching to an anchorage or connector. The agency proposed that the force would be applied so that the 5,300 N (1,190 lb) force is attained within 30 seconds, with an onset rate not exceeding 135,000 N (30,337 lb) per second, and would be maintained at the 5,300 N (1,190 lb) level for at least 10 seconds. The NPRM would have specified that when tested in this manner, no portion of any component attaching to the lower anchorage bars shall move forward more than 125 mm (5 inches), and that there shall be no complete separation of any anchorage component. The test procedure and force levels were based on suggestions from petitioners AAMA *et al.* on the flexible latchplate anchorage system.

GM and Ford suggested that loading all three anchorages at one time (the two lower anchorages and the top tether anchorage) is the most appropriate method to evaluate in a static load test how a child restraint will perform dynamically in limiting forward excursion. GM recommended using a fixture, representing a child restraint, in the static pull test. GM believed that use of the fixture more accurately depicts how the child restraint will perform in a crash. The fixture would be attached to the lower anchorages and to the top tether anchorage, and pulled. Ford also recommended using a fixture that

represents the geometry of a child restraint system. Ford recommended using the ISO draft test procedure, which uses a fixture called a ''Static Force Application Device (SFAD).'' Ford believed that the ISO fixture applies forces on the anchorages that are higher than the forces applied to the fixture, because it applies realistic vertical forces in addition to the horizontal forces. Ford suggested applying force to the test fixture at 10 degrees above the horizontal (as in Standard No. 210, *Seat Belt Anchorages,* 49 CFR 571.210) to replicate the effect of pre-impact braking and vehicle pitching during a crash.

NHTSA has evaluated the above comments regarding the proposed procedure for testing the lower anchorage system. The agency agrees with the commenters' suggestion that it should use a fixture for testing the lower anchorages. The agency believes that the forces of a crash are simultaneously applied to all anchorages and not to one anchorage at a time. Because of this, it is the agency's belief that using a fixture that represents a child restraint system better simulates the conditions of a crash. However, the agency will not attach a top tether anchorage when testing the lower anchorages. Not attaching the tether anchorage is consistent with the draft test procedure being developed by the ISO working group for the rigid bar anchorage system. This is also consistent with the agency's objective to ensure that the child restraint anchorage system will retain the child restraint system in the event that the tether is misused or not used at all.

This final rule adopts the SFAD test fixture specified in the draft ISO standard for testing the strength of the rigid bars and adopts aspects of the test procedure proposed in the NPRM. The SFAD engages the vehicle's rigid bars with rigidly attached connectors replicating, in placement and design, the connectors on a child restraint. The SFAD is not connected to the tether anchorage. A reference point on the SFAD (designated ''Point Y'' on the device) is used to determine compliance with the strength requirements. When a test force is applied to the rigid bars by pulling on the SFAD at a point that is approximately midway from the top of the device, the child restraint anchorage system shall not allow Point Y on this SFAD to be displaced more than 125 mm (5 inches).[27]

Several commenters addressed the adequacy of the force levels proposed to be applied to the anchorages. The NPRM proposed to require that a 5,300 N (1,191 lb) force be maintained for 10 seconds. Gerry Baby Products asked whether the 5,300 N static load is sufficiently high to ensure adequate performance in a crash. Gerry said it has measured dynamic loads in excess of 5,300 N. Indiana Mills and Manufacturing Inc (IMMI) also commented that the proposed force of 5,300 N is lower than what they experienced in dynamic testing. The Roads and Traffic Authority (RTA) of New South Wales commented that in designing tether anchorages, the Australian Design Rule requires that the anchorages sustain a 3,400 N (764 lb) static load. It said, however, that they record dynamic loads well above this in sled testing.

NHTSA has determined that the strength requirements proposed in the NPRM are generally high enough to ensure that the lower anchorage system will be able to withstand the loads generated by a child in a child restraint in a crash. This final rule specifies a forward load of 11,000 N, using a fixture that applies the load to both lower anchorages simultaneously (and not to the tether anchorage).[28] The 11,000 N forward load is similar to the 10,600 N load that was proposed in the NPRM for testing the strength of the lower anchorages (5,300 N applied to each lower anchorage).

The 11,000 N forward load requirement is supported by test data conducted by Transport Canada. Canada performed 48.3 km/h (30 mph) dynamic testing of a 6-year-old (48 lb) child dummy in a (17 lb) booster restraint that was attached to the vehicle seat assembly by the rigid lower bars of a child restraint anchorage system. Dynamic loads recorded at one lower bar was approximately 5,500 N, resulting in a combined dynamic load of about 11,000 N. There is a margin of safety incorporated into the adopted strength requirement by way of the method by which the 11,000 N static load is applied to the anchorages, which is discussed below with regard to the static load onset and hold periods.

As to why NHTSA believes test data on the 6-year-old (48 lb) dummy are pertinent, child restraints are increasingly marketed for children of older ages and higher weights. Recent statements by several child restraint manufacturers indicate that some of their child restraint systems are currently being offered for sale for children weighing up to, and in some cases more than, 60 lb. (A copy of these statements has been placed in NHTSA Docket 74–09 General Reference.) These restraint systems are primarily belt-positioning boosters, which are a type of child restraint booster seat regulated by Standard 213.

While belt-positioning boosters use the vehicle's lap and shoulder belts (Type II belts) to restrain the child, many belt-positioning boosters are also designed for dual use as a toddler restraint. (A toddler restraint is a forward-facing child restraint system, generally recommended for children weighing 30 to 40 lb, that has its own internal harness to restrain the child, and is dependent on the vehicle's anchorage system to connect the child restraint to the vehicle seat. The harness is designed to be removed by the consumer when the child restraint is to be used with a vehicle's Type II belt as a belt-positioning booster.) Under today's final rule, toddler restraints must be designed to attach to the rigid bar anchorage system of the vehicle. Toddler restraints restraining children weighing up to 40 lb will impose the forces generated by these children on the rigid bars. In addition, in a misuse case, where a parent restrains a child weighing more than 40 lb in a booster that is in the toddler restraint mode, the loads could be higher. There is also substantial interest, which NHTSA shares, in the possibility of designing toddler restraints to accommodate children heavier than 40 lb. One tethered child restraint is currently sold in Canada for use by children with a maximum weight of 48 lb, and this trend may occur in the U.S.[29] Given that a child restraint anchorage system would be used with children with weights up to and possibly more than 40 lb, basing the strength requirement of the lower anchorages on forces generated by the 6-year-old dummy best ensures that the anchorages will be able to withstand the loads generated by a child in a crash.

[27] This final rule refers to the SFAD of the ISO draft standard as ''SFAD 2.'' SFAD 2 is also used to test tether anchorages at seating positions that are equipped with a full child restraint anchorage system (i.e., with the rigid lower anchorage bars and the tether anchorage). This final rule also refers to a fixture, called ''SFAD 1'' in this rule, to test tether anchorages at seating positions that do not have a full child restraint anchorage system. SFAD 1 is attached by way of the tether anchorage and the vehicle's seat belt system.

[28] This rule also includes a lateral load of 5,000 N (1,124 lb). The 5,000 N is the lateral load specified in the draft ISO standard.

[29] NHTSA has granted a December 4, 1997 petition for rulemaking from Kathleen Weber asking NHTSA to amend Standard 213 to permit manufacturers to design booster seats with a top tether and to attach the tether during compliance testing with a 48 lb dummy. If adopted, the requested amendment would likely result in manufacturers designing booster seats for children weighing up to and possibly more than 45 lb.

The agency realizes that the 11,000 N static load requirement results in a more severe load than the 11,000 N load generated in Transport Canada's dynamic test. It is considered to be more severe because this final rule adopts the specifications of the NPRM concerning the periods for attaining and holding the required loads. The NPRM proposed that the force be applied to each anchorage within 30 seconds, with an onset rate not exceeding 135,000 N per second, and maintained for 10 seconds. While the 11,000 N static load may be more demanding than a 11,000 N dynamic load in this instance, it ensures that the child restraint anchorage system will perform adequately under most crash conditions, with (as explained above) a wide range of children. NHTSA is not aware of test data that justifies reducing the margin of safety afforded by the 11,000 N static load requirement.

The agency also realizes that the 11,000 N static load requirement of this final rule differs from the draft ISO standard, which specifies a static load requirement of 8,000 N. NHTSA is unaware of the basis for the 8,000 N requirement. There are no test data that NHTSA is aware of that justify setting the requirement at 8,000 N.

With regard to the proposed force application and hold periods, Ford commented that the periods are unrealistically long, and not harmonized with European anchor test regulations and practices. Ford believed that the European periods for attaining and holding the test force would be more representative of real world crash situations. Further, the commenter stated, the proposed force application period of 30 seconds reflects forty-year-old test equipment technology, whereas current state-of-the-art test equipment can apply the test loads in less than 1 second. Ford stated that it supports the load attainment and hold specifications of the ISO draft standard, which specify a test force application period of 2 seconds and hold period of 0.25 seconds.

The force attainment and hold requirements of today's final rule for the lower anchorages are based on Standard 210 and the NPRM. Standard 210 sets strength requirements for vehicle seat belt anchorages. Because today's child restraint systems are secured to the vehicle seat by way of the vehicle's seat belts, which are anchored to the vehicle by the seat belt anchorages, Standard 210's strength requirements establish the level of performance that the current anchorage system for child restraint systems must meet.

The issue of whether Standard 210's force attainment and hold requirements should be harmonized with European regulations has been considered on several occasions by NHTSA. (*See, e.g.,* 55 FR 17970, April 30, 1990.) In deciding against such an action, the agency acknowledged that the Standard 210 loading conditions are orders of magnitude greater than the corresponding time periods observed in crashes (total loading time for seat belts from about 0.10 to 0.15 seconds, load holding time less than 0.005 seconds). However, the agency believed that the Standard 210 provisions are intended to be sufficiently demanding to ensure that the anchorage will not fail even under the most severe crash conditions. The agency decided against reducing the ''margin of safety'' currently required for anchorage strength by Standard 210.

Commenters have not raised new information that warrants changing the established method for testing the vehicle anchorage system used to secure child restraint systems or reducing the margin of safety provided by the established method. Accordingly, the test force application and hold requirements in the NPRM are adopted in this final rule.

This final rule specifies how NHTSA will test multiple child restraint anchorage systems installed on a vehicle seat. This rule specifies that, in the case of vehicle seat assemblies equipped with more than one child restraint anchorage system, at the agency's option, each child restraint anchorage system may be tested simultaneously or sequentially. Simultaneous testing is to ensure that the anchorage systems will be strong enough to withstand the forces generated on them in the event all are in use at the time of the crash. Sequential testing may, at the agency's option, include testing one system to the forward load requirement and testing another system to the lateral load requirement. Such testing reduces the number of test vehicles that NHTSA will need to acquire for its compliance program and enables the agency to better manage its available resources. However, this rule also specifies that a particular child restraint anchorage system need not meet further requirements after having met either the forward load or either lateral pull requirement, tested to any of these requirements at the agency's option. The agency believes that in a real world crash, the anchorage system is not likely to be exposed to the magnitudes of both directional loads. Yet, because the anchorage system is subject to either the forward or lateral loads in a compliance test, manufacturers have to design and manufacture the system such that it will meet both performance criteria.

With regard to adjustment of a vehicle seat in the compliance test, adjustable seats are placed in their full rearward and full downward position and the seat back in its most upright position. These adjustment positions are the same ones specified in the NPRM and adopted by this final rule for testing tether anchorages, which had been based on the adjustment positions specified by Transport Canada in its final regulation on user-ready tether anchorages. NHTSA has considered requiring that adjustable seats be adjusted in any horizontal or vertical position, any seat back angle position and any head restraint adjustment position, to be able to test seats in all possible positions that consumers may use them in the vehicle. The agency did not adopt such a requirement out of concerns about the adequacy of notice for such a requirement. However, NHTSA believes that testing in all adjustment positions may be worthwhile and may propose to adopt such a requirement in the future.

Several commenters suggested that the seat back of the standard seat assembly used in compliance tests of child restraints be fixed instead of flexible. This issue was addressed in a previous action (see 59 FR 12225, March 16, 1994). NHTSA determined that a flexible seat back does not lessen the stringency of the compliance test, as concerned parties had believed. No new information is available to warrant the agency's reconsideration of this issue at this time.

j. Requirements for Child Restraints

In the NPRM, the agency proposed to require all child restraints, other than belt-positioning seats, be equipped with components that are compatible with the proposed standardized, independent anchorages for motor vehicles. The agency did not propose to include belt-positioning seats. They do not have compatibility problems because they use a vehicle's lap and shoulder (Type II) belt system to restrain the child occupant. Commenters did not urge their inclusion. NHTSA reiterates, however, that if a child restraint system is designed for use both as a belt-positioning seat and as a toddler seat (e.g., with its own internal harness), the restraint system is required to have attachments connecting to a child restraint anchorage system.

Several commenters addressed the requirements that would apply to infant-only restraints with detachable bases. Graco requested confirmation that only the base would be required to have the permanently attached components. Ms. Weber of the UMCPP believed that two-piece infant restraints should be

required to have the attachment hardware on both pieces to avoid the possibility of being unable to attach the infant seat/carrier by means of the standardized, independent anchorage system when the seat/carrier is used by itself (i.e., without the base). NHTSA believes that only the base of rear-facing child restraints with detachable bases need have the permanently attached components. To keep cost impacts of the rule as low as possible, the agency is not requiring both pieces to have the components.

This rule also excludes harnesses from the requirement. Harnesses are excluded out of concerns about practicability. Not enough is known as to whether connectors attaching to the rigid bars can be attached to a harness. These child restraints may not have a structural member that is strong enough to which the connectors may be attached.

The NPRM would have required each child restraint to have components that securely fasten the child restraint to the flexible latchplates. The NPRM specified that if a child restraint were also designed to attach to the rigid bars, the child restraint had to use a specific design for the connector. The connector was based on a jaw-like clamp referenced in the ISO draft standard.

Commenters urged NHTSA not to specify the design of the connector that child restraints had to use. As explained above in section VII.d.2., child restraint manufacturers said that hooks, buckles or other types of connectors could and would be used to attach to the 6 mm bar anchorages. As also explained in section VII.d.2., the agency views the design flexibility of the rigid bar anchorage system to be an advantage over any other system and is thus not requiring a specific connector on the child restraint to attach to the vehicle's rigid bars.

This final rule includes a requirement that the child restraints, other than those using hooks to attach to the lower anchorages of a child restraint anchorage system, must provide a visual or audible indication that the two attachments to the rigid bars are fully latched. The visual indication must be detectable under normal daylight lighting conditions. A visual indicator was suggested by the ISO working group in draft standard ISO/DIS 13216–1 and by Transport Canada in NHTSA's October 1996 public meeting. A positive indicator was also favorably received by the participants in the April 1998 AAMA/AIAM consumer clinic. The participants (90 percent) stated that the ''clicking sound'' and ''green indicators'' made them confident that the child restraint was securely installed.

k. Performance and Testing Requirements for Tether Anchorages

Overall, commenters strongly supported the proposed requirement for providing user-ready top tether anchorages in vehicles. Commenters strongly supported NHTSA's effort to harmonize its user-ready tether anchorage requirements with what was then a Canadian proposal for upgrading that country's tether anchorage requirement by requiring user-ready tether anchorages. (That proposal has since been adopted by Canada in revised form.)

Most of the vehicle manufacturers raised issues concerning the proposed test procedure evaluating the strength of the user-ready anchorage. The agency proposed that the user-ready tether anchorages would be tested by attaching a strap to the anchorage that passed over the seat back. This is the test procedure currently required by Transport Canada for testing non-user-ready tether anchorages (i.e., the reinforced anchorage hole) in passenger cars. It was also the procedure proposed by Transport Canada to test user-ready anchorages in vehicles. However, when load was applied by the strap, manufacturers found that the seat back on some MPVs and trucks deformed extensively due to the location of the tether anchorage on the floor or on the seat itself. Transport Canada explains in its Regulatory Impact Analysis Statement for the September 30, 1998 final regulation publication:

> While [the strap-based test method] is acceptable for passenger cars, whose tether anchorages are located in the shelf behind the second row of seats, it can cause extensive deformation of the seat back for hatchbacks, MPVs, and trucks, whose anchorages are usually located on the floor or on the seat itself. The seat back deformation changes the direction of the load, which renders the test inaccurate as a simulation of the forces that act on tether anchorages in actual collisions.

Many vehicle manufacturers commenting on NHTSA's NPRM suggested that the test procedure be changed to use a test fixture that would direct the loads without interference with the seat back. Chrysler suggested directing the force over a round bar instead of directly going over the top of the seat back. All of these commenters made the same suggestions to Transport Canada on its proposed rule.

NHTSA has determined that the proposed procedure did in fact result in seat back deformations that interfered with the evaluation of the strength of the tether. The straight-pull force application proposed in the NPRM directs the force in a line of action that interferes with the top of the vehicle seat. Transport Canada has made the same determination.

In response to the comments it received, Canada made extensive changes in its final regulation. Canada consulted with manufacturers on the testing problems that occurred due to the use of a strap and conducted substantial testing to evaluate and address the problems. Transport Canada solved the problem by using, among other things, a test fixture to direct the test loads. The test fixture replicates the geometry of a child restraint system. Canada determined that the load could be applied to the tether anchorage by way of a fixture, without deforming the vehicle's seat back.

Two different fixtures are specified in the Canadian regulation. A fixture, developed by GM, is used to test a tether anchorage at a seating position that does not have the rigid bar anchorage system. The fixture developed by WG1 (''SFAD 2,'' see section VII.i., above), is used to test a tether anchorage at a seating position that has a rigid bar anchorage system. Incorporation of the ISO SFAD by Canada reflects that country's intent to undertake rulemaking to require the rigid bar child restraint anchorage system in vehicles. Under the Canadian regulation, the appropriate fixture is attached to the tether anchorage by a tether strap and attached to the vehicle seat by the rigid bars or the vehicle seat belts. A test force of 10,000 N (2,248 lb) is applied to the fixture, which in turn distributes loads to the tether and lower anchorages. The Canadian regulation requires the tether anchorage to ''withstand'' the requisite load.

NHTSA has incorporated use of the fixtures into its test procedure. The fixture that will be used to test a tether anchorage at a seating position that does not have the rigid bar anchorage system is referred to as ''SFAD 1.'' The lower portion of SFAD 1 is attached to the vehicle seat by way of the vehicle's seat belts. The fixture that will be used to test a tether anchorage at a seating position that has a rigid bar anchorage system is referred to as ''SFAD 2'' (see also section VII.i., above, which describes use of SFAD 2 to test the rigid bars of a child restraint anchorage system). NHTSA has determined that the test fixtures are sufficiently representative of child restraint systems sold in this country. The fixtures distribute the forces generated in a crash in a manner similar to the distribution of forces by child restraints observed in dynamic crash testing. NHTSA has

based this conclusion on data from tests performed by Canada with the two fixtures. (A copy of the data has been placed in the docket.)

Both SFADs specified in this final rule have a tether strap that attaches to the vehicle's tether anchorage. The tether strap consists of webbing that must meet the breaking strength and elongation limits for lap belt (Type I) assemblies, specified in Standard 209, ''Seat Belt Assemblies'' (49 CFR 571.209). Type I belts are required to meet higher performance requirements for braking strength and elongation than other types of seat belts. The agency has used the requirements for Type I belts because NHTSA believes that the webbing used for the tether strap must be strong enough to transmit the loads to the tether anchorage in a compliance test.

The proposal would have required the same strength requirements that Canada applies now to (non-user ready) reinforced holes for tether anchorages, i.e., a 5,300 N (1,124 lb) force, attained within 30 seconds and held at the 5,300 N level for one second. This final rule has increased this to 15,000 N to reflect the use of the fixture in testing tether anchorages. In addition, the agency has determined that the 15,000 N force level is high enough to ensure that the anchorage will withstand the loads generated by children in forward-facing restraints.

This determination is based on test data from Transport Canada. Canada conducted 30 mph dynamic tests of a CANFIX prototype child restraint (weighing 32 lb) using a 3-year-old (33 lb) dummy and found dynamic loads of about 3,500 N and 4,000 N on the tether anchorage (loads on the lower attachments ranged from 3,000 N to 4,000 N). It also dynamically tested a 3-year-old dummy in a child restraint attached to the vehicle seat assembly by way of a lap belt and tether, and found a dynamic load of about 5,800 N on the tether anchorage (loads on the belt anchorages were about 1,500 N). Transport Canada determined that a static test pull force value of 14,000 N (applied to three anchorage points by way of a fixture) replicates the dynamic test forces that was imposed on the lower anchorages in the CANFIX test. (These data from the Canadian tests have been placed in the docket.) NHTSA realizes that the data was based on tests with a 3-year-old (33 lb) dummy and that children heavier than 33 lb might be in a tethered child restraint. However, the CANFIX prototype restraint used in the Canadian tests weighed 32 lb, which is heavier than child restraints likely to be produced for the rigid bar attachment system. (The child restraint that Britax has produced weighs 17 lb.) Thus, NHTSA believes that the data generated in the Canadian tests represent loads that would be generated by children heavier than 33 lb, restrained in tethered child restraints weighing substantially less than 32 lb. NHTSA believes that the 15,000 N load requirement adopted in this rule will ensure that tether anchorages perform acceptably in a crash for the range of children likely to use the tether, with an acceptable margin of safety.

The force attainment and hold requirements for testing the lower anchorages of a child restraint anchorage system are adopted, as proposed. NHTSA recognizes that the one second hold period contrasts with the agency's 10-second hold period specified in this final rule for the lower anchorages. Unlike the situation for the lower anchorages, there is no tether anchorage requirement in the U.S., so there is no ''reduction'' of an established safety level (unlike the situation vis-a-vis the lower anchorages and Standard 210). Further, a higher margin of safety for the lower anchorages is needed because these anchorages would bear all the crash forces in case of misuse (or nonuse) of the tether attachment.

This rule specifies the manner in which NHTSA will test multiple tether anchorages on a vehicle seat. In the case of a row of designated seating positions that has more than one tether anchorage, the test force may, at the agency's option, be applied simultaneously to each tether anchorage. This is to ensure that the tether anchorages will be strong enough to withstand the forces generated on them in the event all are in use at the time of the crash. This rule also specifies, however, that a particular tether anchorage (test specimen) need not meet further requirements in a compliance test if that particular tether anchorage is part of a child restraint anchorage system and the lower anchorages of the system were previously tested to and met this standard's requirements for the strength of the lower bars (S9.4 of 49 CFR 571.225). The agency believes that the lower bars may have been sufficiently weakened in the earlier compliance test that they may fail when tested again.[30]

This final rule also adopts Canada's provisions specifying where the tether anchorage must be located. Based on tests performed by Transport Canada child restraints tethered near the limit of the location zones performed very well. (A copy of the data has been placed in the docket.) Australia's Federal Office of Road Safety (FORS) and RTA commented that the proposed zone, which was harmonized with Canada's zone, allows more leeway in the lateral placement of the tether anchor fittings than the Australian standard. It said some vehicles that meet the Canadian standard were displaced laterally more than 110 mm (4.3 inches) from the reference plane. NHTSA has reviewed the Canadian and FORS zones and believes that the Australian requirements specifies a zone that may be narrower than needed for the tether anchorage. Transport Canada performed 48.3 km/h (30 mph) dynamic tests with varying angles of the tether strap. In those tests, head excursion, acceleration and tether loads were measured. The results of the tests showed that these measurements were unaffected by the anchorage location.

GM stated that the proposed Figure 4 requirement eliminates a small area from the zone currently allowed in the Canadian standard. This results in a few models of passenger cars having anchorages located within the current Canadian standard zone, but not in the proposed zone. GM included a corrected view requirement in its comment. Canada has also determined that a number of MPV models already position tether anchorages in the zone that is currently specified for passenger cars. Canada has agreed to revise the proposed zone to avoid unnecessary redesign of the affected vehicles. Similar to Canada's final regulation, this final

[30] Transport Canada has also determined that manufacturers of passenger cars should be permitted the option of testing tether anchorages by way of a strap passing over the seat back, until September 1, 2004. This is because existing lines of passenger cars have been certified as meeting Canada's current tether anchorage (hole) requirement using the strap method. NHTSA is also permitting this option to avoid imposing a need on manufacturers to retest their vehicles using the new test method. However, NHTSA notes that, where a safety standard provides manufacturers more than one compliance option, the agency needs to know which option has been selected in order to conduct a compliance test. Moreover, based on previous experience with enforcing standards that include compliance options, the agency is aware that a manufacturer confronted with an apparent noncompliance for the option it has selected (based on a compliance test) may respond by arguing that its vehicles comply with a different option for which the agency has not conducted a compliance test. This response creates obvious difficulties for the agency in managing its available resources for carrying out its enforcement responsibilities, e.g., the possible need to conduct multiple compliance tests for first one compliance option, then another, to determine whether there is a noncompliance. To address this problem, the agency is requiring that where manufacturer options are specified, the manufacturer must select the option by the time it certifies the vehicle and may not thereafter select a different option for the vehicle. This will mean that failure to comply with the selected option will constitute a noncompliance with the standard regardless of whether a vehicle complies with another option.

rule permits manufacturers of passenger cars and MPVs to locate the user-ready tether anchorage in the existing zone until September 1, 2004, when changes to the previous vehicle designs can be implemented with little or no cost.

A number of commenters pointed out that, while the NPRM proposed a requirement that vehicle manufacturers must equip vehicles with an anchorage that permits the attachment of a tether hook meeting the configuration and geometry specified in a proposed Figure 11 that was to have been incorporated into Standard 213 (49 CFR § 571.213), that proposed figure did not sufficiently specify dimensions for the hook to ensure that the anchorage will fit it. GM, Ford, Gerry, IMMI and Millennium commented that the proposal did not limit the length on the point of the hook or on the protrusion of the hook above the base. Thus, vehicle manufacturers could not be assured that hooks could be attached to some tether anchorages. The commenters suggested using Australia's specifications for the tether strap hook. NHTSA agrees that the specifications are reasonable and appropriate, and has reflected the dimensions in Figure 11. NHTSA has also harmonized with Transport Canada on this issue.

The NPRM proposed that the tether anchorage would have to be ''easily accessible'' to the user. Ford suggested that an objective specification of the required access is needed, especially if the anchorage were covered, e.g., by a plastic snap-off cover or a trim panel with a perforated section. The commenter said it recommends removing trim covers with a screwdriver or coin, and suggested specifying that ''anchors should be accessible and usable without the need for any tools other than a knife, screwdriver or coin.'' The agency agrees that the suggested language would clarify the ''easily accessible'' requirement and has reflected it in the standard. However, reference to use of a knife has not been incorporated, because a knife might entail more work to access the anchorage than the agency believes is appropriate.

Advocates and Porsche expressed concern about head restraints. Advocates stated that manufacturers may not provide head restraints where a tether is required or consumers may misuse the tether strap routing to go around instead of over the top of the head restraint. Porsche addressed this issue in the front seat where, in some vehicles, the head restraint is integrated with the seat. NHTSA agrees that compatibility problems between the tether and rear seat head rests could occur in some situations. However, the agency does not believe that this is an unsurmountable design problem. ''Y'' shaped tether strap designs that encircle the head restraint might be used. Further, currently all vehicles sold in Canada and Australia effectively accommodate top tether anchorages. Head restraints have been accommodated in those vehicles for years. Finally, by requiring the use of a fixture for testing tether strength, manufacturers will be able to identify and correct for potential compatibility problems between the tether system and head restraints.

GM and Mitsubishi suggested that convertibles should be excluded from the tether anchorage requirement. These commenters noted that practicability concerns have resulted in that type of vehicle being excluded from Canadian requirements for tether anchorages. GM stated that because convertibles have folding roofs, a stowage area behind the seat back for the top and its mechanism, and less rear seat space, there are technical problems involved in installing tether anchorages in these vehicles. NHTSA agrees that many convertibles may have design problems. Since those convertibles with these problems cannot be readily separated from those without those problems using a definition based on physical attributes, the agency has excluded all convertibles from the tether anchorage requirement.

School buses are also excluded because of the conflicting functions of the tether and of the energy-absorbing and compartmentalized school bus seats. The seat backs of school buses are specially made to deform to control crash forces as part of the compartmentalization concept for school bus passenger protection (see 49 CFR 571.222). If the tether anchorage were on the seat, the seat would deform, as designed, before requisite tether anchorage loads could be reached in a test. The agency believes that it would not be feasible to place the tether anchorage on the bus ceiling. Since the appropriate location on the ceiling would be well to the rear of the seating position, that location may be out of range of a typical tether strap. Also, a tether strap anchored to the roof poses a risk of injury to the child seated behind the tethered child restraint. A tether strap anchored to the floor of the bus may interfere with emergency egress of passengers from the seats immediately rearward of the tethered child restraint. For these reasons, NHTSA is excluding school buses from the tether anchorage requirements.

Commenters strongly supported the proposed requirement to increase the stringency of the head excursion test requirements in Standard 213 to the extent that it would have the effect of requiring a top tether on most forward-facing restraints. Concerning the issue of what child restraints are required to be equipped with an upper tether, Graco Children's Products (Graco), the University of Michigan Child Passenger Protection Research Program (UM–UPP) and Hartley Associates (Hartley) asked whether tethers would be mandated for rear-facing restraints and car beds. Graco believed that benefits have not been determined in rear-facing configurations and that having a tether on these restraints may invite misuse.

By addressing the need for a top tether by increasing the stringency of the head excursion performance requirement, the agency has effectively limited the need for an upper tether requirement to forward-facing child restraint systems. Canada does not require a tether for rear-facing child restraints, but Australia does. NHTSA believes that the benefit of an upper tether would accrue primarily to occupants of forward-facing child restraints because the tether is especially effective at reducing head excursion and the potential for head impacts. The primary benefits to occupants of rear-facing child restraints would be to reduce rearward tipping of the restraint, which do not involve high velocity head strikes. With respect to backless booster seats, the agency agrees with commenters that practicability concerns associated with this rule could lead some manufacturers to cease producing these boosters. The agency is therefore excluding backless booster seats from the requirement.

On the definition of a tether strap, Gerry, Evenflo and Century Millennium Development Corporation (Millennium) requested that NHTSA change the definition to be more specific about where the strap attaches to the child restraint. NHTSA agrees to the requested change and has specified in the definition of tether strap that it is a device that is secured to the rigid structure of the ''seat back'' of a child restraint system.

Ford stated that tether straps that are high-mounted are more effective than ones that are low-mounted. Transport Canada tested high- and low-mounted tether straps and found some but not a substantial amount of difference in performance. (A copy of a report of this testing has been placed in the docket.) Accordingly, NHTSA is not specifying where the point of attachment of the tether is to be on the child restraint, but

urges manufacturers to further evaluate the issue in designing the tether.

Commenters addressed the issue of the length of the tether strap, especially in cases of multipurpose passenger vehicles and trucks that may require long straps to reach an anchorage at the bottom of a vehicle seat or at the floor pan. Manufacturers believed that a minimum length is necessary. Specifically, Gerry stated that based on a survey of available tether hardware, a minimum allowance for tether length of 216 mm (8.5 inches) should be required. NHTSA agrees that child restraint manufacturers should provide tethers of sufficient length to enable consumers to attach a child restraint to a tether anchor that is not within close proximity of the top of the back of the child restraint. The agency, however, is concerned that a long tether strap may result in some consumers not willing to take the time to tighten the excess webbing, which is essential for accruing the benefit of the tether. At this time, the agency does not believe that specifying a 216 mm (8.5 inches) minimum strap length is needed. The agency is not aware of problems with tether straps for child restraints sold in Canada. The agency will decide whether to initiate rulemaking in the future on this matter if it becomes a problem.

l. Leadtime and Phasing-in the Requirements

1. Tether Anchorage and Tether Strap

The NPRM proposed that the requirements that vehicles provide user-ready tether anchorages and that child restraints meet the new excursion limit (if necessary by means of a top tether) be made effective at a much earlier date than the requirement for the lower anchorages of a child restraint anchorage system. The agency explained that passenger cars generally are already equipped with a reinforced tether anchor hole (Canada has required a tether anchorage hole in passenger cars since 1989), so it appeared that a user-ready tether anchorage, complete with all the hardware needed for the consumer to attach a tether hook to the vehicle's tether anchorage, can be provided in the near future.

Canada had proposed an effective date of September 1, 1999 for its user-ready tether anchorage requirement for passenger cars. NHTSA proposed that the effective date for its user-ready tether anchorage requirement for passenger cars be the same as that of the Canadian proposal.

For user-ready tether anchorages on LTVs, NHTSA proposed a September 1, 2000 effective date for its requirement that user-ready anchorages be provided. The agency proposed that date based on Canada's then-proposal that its tether anchorage (hole) requirement be effective September 1, 1999, and its tether hardware requirement effective a year later. (MPVs have not been subject to the Canadian requirement that an anchorage hole be provided. That requirement has only applied to passenger cars in Canada.)

Since NHTSA's NPRM, Canada adopted an effective date of September 1, 1999 for its user-ready tether anchorage requirement for passenger cars, and an effective date of September 1, 2000 for a user-ready anchorage requirement for LTVs.

All but one vehicle manufacturer supported the proposed effective date. Most noted that the tether anchorage requirement could be made effective much earlier than the requirement for the lower anchorages. Ford said that it could provide tether anchorages in all of its passenger cars by September 1, 1998. However, in July 1998, Volvo wrote to NHTSA to inform the agency that Volvo is planning to introduce a car (the Volvo S/V 40) into the United States for the 2000 model year (MY). Volvo explained that the car does not have the reinforced tether anchorage hole that all vehicles must have to be sold in Canada. (The manufacturer only plans to sell the car in the U.S., and not sell it in Canada.) The manufacturer said that it cannot install user-ready tether anchorages by September 1, 1999 in these vehicles. Instead, Volvo suggests that the effective date for the user-ready tether anchorage requirement be two years from the date of the final rule, or be phased-in such that after 1 year, 60 percent of a manufacturer's vehicles would be required to be equipped with the user-ready tether anchorage and the rest of the manufacturer's vehicles required to comply with the requirement a year later.

NHTSA has decided to phase-in the user-ready tether anchorage requirement for cars over a two-year period to provide Volvo time to equip its S/V 40 model vehicles with the anchorages. However, the agency does not agree with Volvo's suggestion that only 60 percent of a manufacturer's vehicles should be required to meet the requirement in the first year. Volvo did not provide any information showing that the models will comprise 60 percent of Volvo's vehicles.

In addition, NHTSA believes that the 60 percent figure the manufacturer requested is too low because one of the model types of the S/V 40 is a sedan. NHTSA believes that a user-ready tether anchorage is not difficult to install in a sedan. The reinforced tether anchorage hole can be drilled into structure behind the rear seat, such as that on or around the package shelf. The agency believes that Volvo can expedite installation of the user-ready tether anchorage in at least the sedan versions of the model to meet a September 1, 1999 effective date. Accordingly, this final rule specifies that beginning September 1, 1999, 80 percent of a manufacturer's passenger cars would be required to be equipped with the user-ready tether anchorages and the rest of the vehicles required to comply with the requirement a year later. The tether anchorage requirements for LTVs become effective September 1, 2000.

With regard to child restraints, NHTSA said that some child restraint manufacturers have a Canadian variant of most, if not all, of their forward-facing models, such that child restraints manufactured in the U.S. and sold in Canada already are equipped with a tether to meet Canadian requirements. NHTSA believed that most U.S. manufacturers produce child restraints for sale in Canada. NHTSA proposed an effective date of September 1, 1999 for its proposal to effectively require tethers by increasing the stringency of Standard 213's head excursion requirement. Child restraint manufacturers did not object to the proposed effective date for the more stringent head excursion requirement (which indirectly requires a tether for most child restraint systems). Thus, the proposed effective date of September 1, 1999 is adopted.

2. Lower Anchorage Bars and Means for Attaching Child Restraints to Those Bars

The agency noted in the NPRM that the petitioners for the flexible latchplate system did not explain why they believed that a phase-in is needed for the lower anchorage requirement, or why more than four years would be needed to implement it. The agency said in the NPRM that it wanted to improve compatibility of child restraints and motor vehicles as promptly as possible. To that end, NHTSA requested comments on the feasibility of the manufacturers achieving full implementation (100 percent of affected vehicles) in a shorter period, e.g., two years after the publication of a final rule.

Vehicle manufacturers overwhelmingly commented that a phase-in is needed because the standard would require substantial redesign of vehicle seats and supporting structure. Ford explained that a phase-in is needed because there are no attachment points suitably located in existing vehicles. Ford stated that manufacturers

will typically need to modify the floor pans and the stamping and welding tools used in the production of floor pans, which the commenter stated are changes needing long leadtimes. Ford said that if a final rule were issued that in the summer of 1997, it could meet the phase-in requirements for the first two model years (10 percent in MY 1999, 30 percent in MY 2000) and install child restraint system anchorages in a substantially higher percentage of its vehicles during the third model year (MY 2001) than the 50 percent proposed in the June 1996 petition. Ford expected to install child restraint system anchorages in most vehicles, particularly family vehicles, by September 1, 2000 (i.e., three years after issuance of the final rule) in response to market forces. Ford said that the final year of a four year phase-in is needed to fit anchorages into low volume vehicles. Volkswagen stated that the rigid bar anchorage system is already provided as standard equipment in Europe on all 1998 model Golf vehicles. VW also said that the rigid bars will likely be in practically all other Volkswagen and Audi models by the 1999 model year.

NHTSA is persuaded that because vehicles will require modifications to floor pan stamping and to floor pan welding tools, and because those changes are long leadtime changes, establishing a phase-in will ensure that the child restraint anchorage systems are introduced as soon as possible. A phase-in will also provide manufacturers needed time to redesign and produce vehicles in a cost efficient manner. A four-year leadtime generally corresponds to manufacturing cycles introducing new vehicles or significantly modifying existing models. Yet, because compatibility should improved as soon as possible, the agency believes the four year cycle should be condensed into three years. Comments from Ford and VW indicate that full implementation of the requirement could be achieved within three years. Today's rule adopts a three year phase-in period for the lower vehicle anchorages, which will begin on September 1, 2000. The phase-in schedule for providing the lower anchorage systems is as follows:

Period of manufacture	Percentage of each manufacturer's fleet that needs to have lower anchorage systems for child restraints
From September 1, 2000 to August 31, 2001	20
From September 1, 2001 to August 31, 2002	50
On or after September 1, 2002	100

NHTSA has decided to allow manufacturers of vehicles manufactured in two or more stages to delay compliance until the final year of the phase-in. Because final stage manufacturers and alterers have no control over the year of the phase-in in which a particular vehicle will be certified as complying with the new requirements, NHTSA is allowing these manufacturers until the final year of the phase-in to certify that their vehicles meet the new requirement.

Gerry Baby Products, Cosco and Mark Sedlack of the Millennium Development Corporation urged against a phase-in for the requirement that child restraint system be equipped with means of attaching to the lower anchorage system on vehicles. These commenters stated that child restraint manufacturers do not have as much control over the distribution chain as vehicle manufacturers do. They argued that retail stores will simply refuse to stock the limited numbers of child restraints equipped with the attachments to the lower anchorage systems because those restraints will be higher priced than child restraints that do not have the attachments. The commenters also said that the requirement for the attachments on child restraints should not become effective before the requirement for the lower anchorage system is phased into 100 percent of the vehicle fleet. Otherwise, these commenters warn, consumers will be faced with a new set of attachment hardware and probably no vehicle in which to use the system. This situation was said to be likely to cause widespread confusion and increased potential for misuse.

NHTSA concurs with these commenters that the requirement that child restraint system be equipped with means of attaching to the lower anchorage system should not be phased-in for child restraints. The agency further agrees that the requirement should not become mandatory until 100 percent of affected new vehicles are required to have the lower anchorage system, which will be September 1, 2002. The rationale for waiting until that date is to reduce the possibility of a parent purchasing a new child restraint that has the new attachment hardware, and having nowhere in his or her vehicle to use the improved hardware. Nevertheless, NHTSA believes that market forces probably will encourage child restraint manufacturers to install the attachments before that date.

3. Requirement To Identify Vehicles Certified to the Vehicle Requirements During the Phase-In

Where a safety standard provides manufacturers a phase-in period for a requirement to take effect, the agency needs to know whether a vehicle has been certified as meeting the standard when selecting vehicles to test in NHTSA's compliance program. A phased-in requirement typically includes a reporting requirement for manufacturers to identify to NHTSA which vehicles have been certified to the standard, but the report usually is made at the end of a model year. To enable NHTSA to test vehicles during the production year, manufacturers have to identify the vehicles during the production year that have been certified as complying with the standard. In addition, for reasons similar to those discussed in section VII.j with regard to compliance options, the agency wants to avoid a situation where a manufacturer confronted with an apparent noncompliance with a requirement may respond by arguing that its vehicle was not part of the percentage of its vehicles that was certified as complying with the requirement. This response creates obvious difficulties for the agency in managing its available resources for carrying out its enforcement responsibilities. To enable NHTSA to test vehicles during the production year and to better avoid the possible waste of agency resources, manufacturers have to identify the vehicles during the production year that have been certified as complying with the standard. This final rule includes a requirement that at anytime during the production year, each manufacturer shall, upon request from NHTSA, provide information identifying the vehicles (by make, model and vehicle identification number) that have been certified as complying with the requirements for tether anchorages or child restraint anchorage systems, as the case may be. The manufacturer's identification of a vehicle as a certified vehicle is irrevocable.

VIII. Rulemaking Analyses and Notices

a. Executive Order 12866 (Federal Regulation) and DOT Regulatory Policies and Procedures.

NHTSA has examined the impact of this rulemaking action and determined that it is economically significant within the meaning of Executive Order 12866 and significant within the meaning of the Department of Transportation's regulatory policies and procedures. NHTSA has prepared a final economic assessment (FEA) for this final rule which discusses issues relating to the estimated costs, benefits and other impacts of this rulemaking.

A copy of this analysis has been placed in the docket for this rulemaking action. Interested persons may obtain copies of this document by contacting the docket section at the address or phone number provided at the beginning of this document.

The estimated average total cost of this rule is approximately $152 million annually. The cost of the rule for vehicles is estimated to be about $85 million annually. The costs of the rule related to the vehicle will range, per vehicle, from $2.82 (one rigid bar anchorage system in front seat only) to $6.62 (for a system in front seat and one in back seat or two systems in rear seats, plus a tether anchorage). NHTSA estimates that 15 million vehicles will be affected annually: 9 million passenger cars and light trucks with ''adequate'' rear seats, 3 million vehicles with no rear seat, and 3 million vehicles that can only accommodate forward-facing child restraints in the rear seat (not a rear-facing infant seat).

The estimated annual cost of compliance to child restraint manufacturers is $67 million. This estimate is based on 3.9 million child restraints using webbing to attach the connector to the rigid bars, which adds an average of $17.19 to each child restraint. NHTSA believes that webbing is the material that is most likely to be chosen by child restraint manufacturers to attach the connector. The actual amount spent by child restraint manufacturers, however, will vary depending on the type of connector used, e.g., a hook versus a buckle, and the means used to attach the connector to the child restraint system, e.g., webbing versus a rigid attachment. Some child restraint manufacturers may produce restraints using less expensive equipment, while other manufacturers may chose to use more expensive equipment than is necessary to comply with the rule, resulting in an impact on child restraint systems ranging from $9.62 per restraint to $43.92 per restraint. NHTSA believes that $17.19 is approximately the maximum additional amount that it will cost the child restraint manufacturer to produce a restraint that is both marketable and complies with this rule.

The benefits of the rule are estimated to be 36 to 50 lives saved per year, and 1,231 to 2,929 injuries prevented. Based on the estimated average total annual cost of $152 million, the cost per equivalent life saved for this rule is estimated to be from $2.1 to $3.7 million.

NHTSA has considered the possible cost impacts of this rule on child restraint use rates. As discussed in greater detail in the FEA and in Appendix A to this final rule, the agency believes that the demand for child restraint systems is highly inelastic. This conclusion is supported by the fact that child restraints are considered a necessity since their use is mandated by every State. Also, information indicates that price is not the only criterion affecting sales. The lowest priced child restraints do not have the highest sales volume. Based on clinical trials, consumers have indicated that they are willing to pay a higher price for improved attachment systems. In addition, even if there were an adverse effect on the child restraint market, especially the low end of that market, due to the $9.62 price increase necessitated by this rule, the agency believes that hospitals and loaner programs will be able to provide child restraints for persons who want them but chose not to buy one because of the price increase. Some hospitals and loaner programs believe that they will be able to obtain enough funds to purchase the new child restraints without any major change in the number of restraints they are able to provide to the public.

b. Regulatory Flexibility Act

The Regulatory Flexibility Act of 1980 (Public Law 96–354), as amended, requires agencies to evaluate the potential effects of their proposed and final rules on small businesses, small organizations and small governmental jurisdictions. Section 603 of the Act requires agencies to prepare and make available for public comment a final regulatory flexibility analysis (FRFA) describing the impact of final rules on small entities. NHTSA has included an FRFA in the FEA for this rule.

Section 603(b) of the Act specifies the content of a FRFA. Each FRFA must contain:

- A description of the reasons why action by the agency is being considered.
- A succinct statement of the objectives of, and legal basis for, the final rule.
- A description of and, where feasible, an estimate of the number of small entities to which the final rule will apply.
- A description of the projected reporting, record keeping and other compliance requirements of the final rule including an estimate of the classes of small entities which will be subject to the requirement and the type of professional skills necessary for preparation of the report or record.
- An identification, to the extent practicable, of all relevant Federal rules which may duplicate, overlap or conflict with the final rule.
- Each final regulatory flexibility analysis shall also contain a description of any significant alternatives to the final rule which accomplish the stated objectives of applicable statutes and which minimize any significant economic impact of the final rule on small entities.

The following discussion summarizes the FRFA.

1. Description of the Reasons Why Action by the Agency Is Being Considered

The FRFA explains that NHTSA has undertaken this rulemaking to improve the compatibility of child restraints and vehicle safety belts and increase the correct installation of child restraints. The correct use of child restraints is important because of the number of children killed and injured in vehicle accidents. Annually, about 600 children less than five years of age are killed and over 70,000 are injured as occupants in motor vehicle crashes.

While child restraints are highly effective in reducing the likelihood of death or serious injury in motor vehicle crashes, the degree of their effectiveness depends on how they are installed. This final rule improves child restraint effectiveness by improving compatibility through the establishment of an independent means of securing child restraints.

2. Objectives of, and Legal Basis for, the Final Rule

The final rule is issued under the authority of 49 U.S.C. 322, 30111, 30115, 30117 and 30166; delegation of authority at 49 CFR 1.50.

The objective of this rule is make child restraints easier to install correctly. It requires that motor vehicles and add-on child restraints be equipped with a means independent of vehicle safety belts for securing child restraints to vehicle seats. This rule also reduces

allowable head excursion to effectively require child restraints to be equipped with an upper tether strap. Attached tethers will result in fewer head impacts in a crash.

3. Description and Estimate of the Number of Small Entities to Which the Final Rule Will Apply

NHTSA believes that the final rule could have a significant impact on a substantial number of small entities. The rule would affect motor vehicle manufacturers, almost all of which would not qualify as small businesses, and portable child restraint manufacturers. NHTSA estimates there to be about 10 manufacturers of portable child restraints, four or five of which could be small businesses.

Business entities are generally defined as small businesses by Standard Industrial Classification (SIC) code, for the purposes of receiving Small Business Administration assistance. One of the criteria for determining size, as stated in 13 CFR 121.601, is the number of employees in the firm. There is no separate SIC code for child restraints, or even a category that they fit into well. However, there are categories that could be appropriate. To qualify as a small business in the Motor Vehicle Parts and Accessories category (SIC 3714), the firm must have fewer than 750 employees. The agency has considered the small business impacts of this rule based on this criterion. On the other hand, to qualify as a small business in the category including manufacturers of baby furniture, the firm must have fewer than 500 employees. The NPRM requested comments on which Standard Industrial Classification code would best represent child restraint manufacturers, but no comment was received in response.

The FRFA discusses the possible impacts on small entities. As discussed in the FRFA, the incremental cost increase of $9.62 and the requirement to redesign child restraints could have a significant economic impact on a substantial number of small businesses. NHTSA does not know the specific elasticity of demand for child restraints, but believes that it is highly inelastic. NHTSA believes that an increase in the price of a child restraint of this magnitude will not lead to any significant decrease in demand for the product.

According to information from Cosco (see Appendix A) the average purchase price of a convertible car seat today is $63. About 25 percent of the car seats purchased cost $50 or less; less than five percent cost $100 or more. Cosco estimated that at least 10 percent of the people would not be able to purchase a car seat if prices increased significantly.

The NPRM requested comments on the effect that the price increase resulting from this rule will have on small businesses that manufacture child restraints. No comments were received on this issue.

4. Description of the Projected Reporting, Record Keeping and Other Compliance Requirements for Small Entities

The final rule sets new performance requirements that would enhance the safety of child restraints. Child restraint manufacturers must certify that their products comply with the requirements of the final rule. The certification is made when certifying compliance to Standard 213, in accordance with the provisions set forth in S5.5.2(e) of the standard. NHTSA has decided against a phase-in of the requirements for child restraint manufacturers, so there are no reporting or recordkeeping requirements associated with a phase-in, for those manufacturers. There are no other reporting or record keeping requirements in this final rule for child restraint manufacturers or small businesses.

The final rule will result in new designs for child restraints and an increase in the price of child restraints. An increase in child restraint prices may also affect loaner and giveaway programs. While such a program could have fewer seats available, comments submitted to the NPRM indicate that if the new seats perform as projected, there would be minor effect on the loaner programs.

5. Duplication With Other Federal Rules

There are no relevant Federal rules which may duplicate, overlap or conflict with the final rule.

6. Description of Any Significant Alternatives to the Final Rule

NHTSA believes that there are no alternatives to the rule which would accomplish the stated objectives of 49 U.S.C. 30101 *et seq.* and which would minimize any significant economic impact of the rule on small entities. As discussed above in section III.d., ''Summary of the NPRM, Alternatives considered,'' NHTSA considered a number of other approaches to improve the compatibility between child restraints and vehicle seats. SAE Recommended Practice J1819, ''Securing Child Restraint Systems in Motor Vehicle Rear Seats,'' is not sufficient alone to achieve the desired level of compatibility. It is a tool for evaluating compatibility, not a requirement that vehicle seats and child restraints must be compatible. Further, it is very difficult for a single system to optimize the safety protection for adults of all ranges and child restraints of different types. The current ''lockability'' requirement is not sufficient alone for improving compatibility, because it still depends on the user knowing enough and making the effort to manipulate and correctly route the belt system. Also, the lockability requirement does not address the effects of forward-mounted seat belt anchorages on child restraint effectiveness. Further, because the requirement still depends on the seat belt system to restrain child restraints and the adult population, the lockability approach makes it difficult for designs of the seat belt system to optimize the system for adults, teenagers and older children.

An independent means of attaching child restraints will make properly attaching child restraints easier, and will enable vehicle manufacturers to optimize the design of vehicle belt systems for adult occupants. As for alternative designs of independent child restraint anchorage systems, as discussed in Appendix A, the ''Car Seat Only (CSO)'' system suggested by Cosco would not make attaching a child restraint significantly easier than it is today. The CSO belt would have to be correctly routed through the child restraint, which is a problem occurring with present seats, and appears hard to tighten. Also, Cosco provided no information showing that the CSO belt would improve the securement of a child restraint on contoured (especially humped) seats. Another concern relates to the potential for inadvertent use by an adult occupant. As for the flexible latchplate system as an alternative, as discussed in section VII.d., NHTSA has determined that the rigid bar system has advantages over the flexible latchplate system with regard to international harmonization of safety standards, the design flexibility of the systems, and possible safety benefits of the rigid bar system that warrant its selection over the flexible latchplate system.

c. Executive Order 12612

This rule has been analyzed in accordance with the principles and criteria contained in Executive Order 12612, and the agency has determined that this rule does not have sufficient federalism implications to warrant the preparation of a Federalism Assessment.

d. Unfunded Mandates Reform Act

The Unfunded Mandates Reform Act of 1995 (Public Law 104–4) requires

agencies to prepare a written assessment of the costs, benefits and other effects of proposed or final rules that include a Federal mandate likely to result in the expenditure by State, local or tribal governments, in the aggregate, or by the private sector, of more than $100 million annually. NHTSA has included an evaluation in the FEA for this final rule. The costs and benefits of the rule are discussed above and throughout the FEA.

Participants in a NHTSA public meeting held in March 1995 at the Lifesavers National Conference on Highway Safety Priorities, who typically work in State highway traffic safety agencies, community traffic safety programs and State or local law enforcement agencies, expressed strong support for a requirement for an independent child restraint anchorage system. Support for an independent child restraint anchorage system was also expressed at NHTSA's October 1996 public workshop on various types of anchorage systems.

As discussed above in sections III.d., VII, VIII.b., and in the FEA, the agency does not believe that there are feasible alternatives to the child restraint anchorage system adopted in this final rule. See section VIII.b., above, for a summary of the agency's assessment of the alternatives consisting of SAE Recommended Practice J1819, Standard 208's ''lockability'' requirement, Cosco's CSO system and the flexible latchplate child restraint anchorage system. It should be noted that the rigid bar anchorage system selected by this final rule is the most cost effective of the alternative independent child restraint anchorage systems that the agency evaluated in this regulatory action. This anchorage system results in lower child restraint costs (as low as $9.60 per restraint) than the flexible latchplate system ($11.96 per restraint), and lower vehicle costs ($6.62 for two full anchorages systems plus a third tether anchorage, compared to $8.74 for two full flexible latchplate systems with a third tether anchorage). The vehicle cost of the rigid bar anchorage system is lower than the vehicle costs of the CSO system. (The retractor alone would cost $2.50 to $3.00 per system, or $5 to $6 for two systems. Adding the cost of the belt and anchorage would increase this cost well above the $6.62 for two full rigid anchorages.)

e. National Technology Transfer and Advancement Act

This final rule accords with the spirit of the National Technology Transfer and Advancement Act of 1995 (Public Law 104–113). Under the Act, ''all Federal agencies and departments shall use technical standards that are developed or adopted by voluntary consensus standards bodies, using such technical standards as a means to carry out policy objectives or activities determined by the agencies and departments.'' This final rule uses the technical specifications set forth in a draft international standard being developed by Technical Committee 22 to the International Organization for Standardization (ISO), a worldwide voluntary federation of ISO member bodies. Using the draft ISO standard is consistent with the Act's goals of eliminating the agency's cost of developing its own standards, and encouraging long-term growth for U.S. enterprises and promoting efficiency and economic competition through harmonization of standards.

While NHTSA anticipates that the ISO will be adopting the draft standard as an International Standard within the next year, NHTSA is issuing this final rule at this date, prior to the ISO's completion of work on the draft standard, in order to provide increased safety to this country's children as quickly as possible. Further, the agency anticipates that the ISO and the working group will not make significant changes to the draft ISO standard. To the extent that the final ISO standard differs from this final rule, the agency will evaluate those differences to determine if changes to this final rule appear warranted. In the event NHTSA tentatively determines that changes may be warranted, the agency will commence a rulemaking proceeding and make a decision as to the issuance of an amendment based on all available information developed in the course of that proceeding, in accordance with statutory criteria.

f. National Environmental Policy Act

NHTSA has analyzed this rulemaking action for the purposes of the National Environmental Policy Act. The agency has determined that implementation of this action would not have any significant impact on the quality of the human environment.

g. Executive Order 12778 (Civil Justice Reform)

This rule does not have any retroactive effect. Under section 49 U.S.C. 30103, whenever a Federal motor vehicle safety standard is in effect, a state may not adopt or maintain a safety standard applicable to the same aspect of performance which is not identical to the Federal standard, except to the extent that the state requirement imposes a higher level of performance and applies only to vehicles procured for the State's use. 49 U.S.C. 30161 sets forth a procedure for judicial review of final rules establishing, amending or revoking Federal motor vehicle safety standards. That section does not require submission of a petition for reconsideration or other administrative proceedings before parties may file suit in court.

h. Paperwork Reduction Act

The phase-in production reporting requirements described in this final rule are considered to be information collection requirements as defined by the Office of Management and Budget (OMB) in 5 CFR part 1320. The collection of information would require manufacturers of passenger cars and trucks and multipurpose passenger vehicles with a GVWR or 3,855 kg (8,500 lb) or less and buses with a GVWR of 4,536 kg (10,000 lb) or less to annually submit a report, and maintain records related to the report, concerning the number of such vehicles that meet the user-ready tether anchorage and child restraint anchorage system requirements of Standard 225 during the phase-in of those requirements. The phase-in of the tether anchorage requirement will be completed in one year, beginning September 1, 1999, and the phase-in of the rigid bar lower anchorage requirements will be completed in three years, beginning September 1, 2000. The purpose of the reporting requirements is to aid the agency in determining whether a manufacturer of passenger cars and trucks and multipurpose passenger vehicles with a GVWR or 3,855 kg (8,500 lb) or less, or buses with a GVWR of 4,536 kg (10,000 lb) or less, has complied with the tether anchorage and child restraint anchorage system requirements during the phase-in of those requirements.

The first required report will pertain to the tether anchorage phase-in requirements. Under today's final rule, the report will be due within 60 days after the end of the production year ending August 31, 2000.

NHTSA will be submitting the information collection request to OMB for review and clearance under the Paperwork Reduction Act of 1995 (Public Law 104–13, 44 U.S.C. Chapter 35) in the near future. The clearance for the information collection requirements of Standard 213, ''Child Restraint Systems,'' will expire in the year 2000 (OMB Clearance No. 2127–0511). NHTSA anticipates submitting a request to OMB to renew the clearance of that standard and at or near same time, will be submitting an information collection

request to OMB for review and clearance of the phase-in reporting requirements adopted today for Standard 225.

List of Subjects

49 CFR Part 571

Imports, Incorporation by reference, Motor vehicle safety, Reporting and recordkeeping requirements, Tires.

49 CFR Part 596

Infants and children, Motor vehicle safety, Reporting and recordkeeping requirements.

In consideration of the foregoing, NHTSA amends 49 CFR Chapter V as set forth below.

PART 571—FEDERAL MOTOR VEHICLE SAFETY STANDARDS

1. The authority citation for Part 571 is revised to read as follows:

Authority: 49 U.S.C. 322, 30111, 30115, 30166 and 30177; delegation of authority at 49 CFR 1.50.

2. Section 571.208 is amended by revising the introductory text of S7.1.1.5 and adding S7.1.1.5(d), to read as follows:

§ 571.208 Standard No. 208; Occupant crash protection.

* * * * *

S7.1.1.5 Passenger cars, and trucks, buses, and multipurpose passenger vehicles with a GVWR of 10,000 pounds or less manufactured on or after September 1, 1995 shall meet the requirements of S7.1.1.5(a), S7.1.1.5(b) and S7.1.1.5(c), subject to S7.1.1.5(d).

* * * * *

(d) For passenger cars, and trucks and multipurpose passenger vehicles with a GVWR of 8,500 pounds or less, and buses with a GVWR of 10,000 lb or less manufactured on or after September 1, 2012, each designated seating position that is equipped with a child restraint anchorage system meeting the requirements of § 571.225 need not meet the requirements of this S7.1.1.5.

* * * * *

3. Section 571.213 is amended by:

a. Adding to S4, in alphabetical order, definitions for ''Child restraint anchorage system,'' ''Tether anchorage,'' ''Tether strap,'' and ''Tether hook''';

b. Revising S5.1.3;

c. Revising S5.1.3.1, S5.3.1, S5.3.2, and S5.6.1;

d. Adding S5.9;

e. Revising S6.1.1(a)(1), S6.1.1(c), and S6.1.2(a)(1);

f. Adding S6.1.2(d)(1)(iii); and

g. Revising Figure 1A and Figure 1B, and adding, in numerical order, Figure 1A', Figure 1B' and Figure 11.

The revised and added paragraphs read as follows:

§ 571.213 Standard No. 213; Child restraint systems.

* * * * *

S4. *Definitions.*

* * * * *

Child restraint anchorage system is defined in S3 of FMVSS No. 225 (§ 571.225).

* * * * *

Tether anchorage is defined in S3 of FMVSS No. 225 (§ 571.225).

Tether strap is defined in S3 of FMVSS No. 225 (§ 571.225).

Tether hook is defined in S3 of FMVSS No. 225 (§ 571.225).

* * * * *

S5.1.3 *Occupant excursion.* When tested in accordance with S6.1 and the requirements specified in this section, each child restraint system shall meet the applicable excursion limit requirements specified in S5.1.3.1–S5.1.3.3.

S5.1.3.1 *Child restraint systems other than rear-facing ones and car beds.* Each child restraint system, other than a rear-facing child restraint system or a car bed, shall retain the test dummy's torso within the system.

(a) For each add-on child restraint system:

(1) No portion of the test dummy's head shall pass through a vertical transverse plane that is 720 mm or 813 mm (as specified in the table in this S5.1.3.1) forward of point Z on the standard seat assembly, measured along the center SORL (as illustrated in figure 1B of this standard); and

(2) Neither knee pivot point shall pass through a vertical transverse plane that is 915 mm forward of point Z on the standard seat assembly, measured along the center SORL.

TABLE TO S5.1.3.1(A).—ADD-ON FORWARD-FACING CHILD RESTRAINTS

When this type of child restraintis	Is tested in accordance with—	These excursion limits apply	Explanatory note: In the test specified in 2nd column, the child restraint is attached to the test seat assembly in the manner described below, subject to certain conditions
Harnesses, backless booster seats with tethers, and restraints designed for use by physically handicapped children.	S6.1.2(a)(1)(A)(i)	Head 813 mm; Knee 915 mm	Attached with lap belt; in addition, if a tether is provided, it is attached.
Belt-positioning seats	S6.1.2(a)(1)(B)	Head 813 mm; Knee 915 mm	Attached with lap and shoulder belt; no tether is attached.
All other child restraints, manufactured before September 1, 1999.	S6.1.2(a)(1)(A)(ii)	Head 813 mm; Knee 915 mm	Attached with lap belt; no tether is attached.
All other child restraints, manufactured on or after September 1, 1999.	S6.1.2(a)(1)(A)(ii)	Head 813 mm; Knee 915 mm	Attached with lap belt; no tether is attached.
	S6.1.2(a)(1)(A)(iv) (beginning September 1, 2002).		Attached to lower anchorages of child restraint anchorage system; no tether is attached.
	S6.1.2(a)(1)(A)(i)	Head 720 mm; Knee 915 mm	Attached with lap belt; in addition, if a tether is provided, it is attached.
	S6.1.2(a)(1)(A)(iii) (beginning September 1, 2002).		Attached to lower anchorages of child restraint anchorage system; in addition, if a tether is provided, it is attached.

(b) In the case of a built-in child restraint system, neither knee pivot point shall, at any time during the dynamic test, pass through a vertical transverse plane that is 305 mm forward of the initial pre-test position of the respective knee pivot point, measured along a horizontal line that passes through the knee pivot point and is parallel to the vertical longitudinal plane that passes through the vehicle's longitudinal centerline.

* * * * *

S5.3 Installation.

S5.3.1 Except for components designed to attach to a child restraint anchorage system, each add-on child restraint system shall not have any means designed for attaching the system to a vehicle seat cushion or vehicle seat back and any component (except belts) that is designed to be inserted between the vehicle seat cushion and vehicle seat back.

S5.3.2 Each add-on child restraint system shall be capable of meeting the requirements of this standard when installed on the vehicle seating assembly solely by each of the means indicated in the following table for the particular type of child restraint system:

Type of add-on child restraint system	Means of installation			
	Type 1 seat belt assembly	Type 1 seat belt assembly plus a tether anchorage, if needed	Child restraint anchorage system (effective September 1, 2002)	Type II seat belt assembly
Harnesses		X		
Car beds	X			
Rear-facing restraints	X		X	
Belt-positioning seats				X
All other child restraints	X	X	X	

* * * * *

S5.6.1 *Add-on child restraint systems.* Each add-on child restraint system shall be accompanied by printed installation instructions in English that provide a step-by-step procedure, including diagrams, for installing the system in motor vehicles, securing the system in the vehicles, positioning a child in the system, and adjusting the system to fit the child. For each child restraint system that has components for attaching to a tether anchorage or a child restraint anchorage system, the installation instructions shall include a step-by-step procedure, including diagrams, for properly attaching to that anchorage or system.

* * * * *

S5.9 *Attachment to child restraint anchorage system.*

(a) Each add-on child restraint system manufactured on or after September 1, 2002, other than a car bed, harness and belt-positioning seat, shall have components permanently attached to the system that enable the restraint to be securely fastened to the lower anchorages of the child restraint anchorage system specified in Standard No. 225 (§ 571.225) and depicted in Drawing Package 100–1000 with Addendum A: Seat Base Weldment (consisting of drawings and a bill of materials) dated October 23, 1998, (incorporated by reference; see § 571.5).

(b) In the case of each child restraint system that is manufactured on or after September 1, 1999 and that has components for attaching the system to a tether anchorage, those components shall include a tether hook that conforms to the configuration and geometry specified in Figure 11 of this standard.

(c) In the case of each child restraint system that is manufactured on or after September 1, 1999 and that has components, including belt webbing, for attaching the system to a tether anchorage or to a child restraint anchorage system, the belt webbing shall be adjustable so that the child restraint can be tightly attached to the vehicle.

(d) Each child restraint system, other than a system with hooks for attaching to the lower anchorages of the child restraint anchorage system, shall provide either a clear audible indication when each attachment to the lower anchorages becomes fully latched or attached, or a clear visual indication that all attachments to the lower anchorages are fully latched or attached. Visual indications shall be detectable under normal daylight lighting conditions.

* * * * *

S6.1.1 *Test conditions.*

(a) Test devices.

(1) The test device for add-on restraint systems is a standard seat assembly consisting of a simulated vehicle bench seat, with three seating positions, which is described in Drawing Package SAS–100–1000 with Addendum A: Seat Base Weldment (consisting of drawings and a bill of materials) dated October 23, 1998, (incorporated by reference; see § 571.5). The assembly is mounted on a dynamic test platform so that the center SORL of the seat is parallel to the direction of the test platform travel and so that movement between the base of the assembly and the platform is prevented.

* * * * *

(c) As illustrated in Figures 1A and 1B of this standard, attached to the seat belt anchorage points provided on the standard seat assembly are Type 1 seat belt assemblies in the case of add-on child restraint systems other than belt-positioning seats, or Type 2 seat belt assemblies in the case of belt-positioning seats. These seat belt assemblies meet the requirements of Standard No. 209 (§ 571.209) and have webbing with a width of not more than 2 inches, and are attached to the anchorage points without the use of retractors or reels of any kind. As illustrated in Figures 1A'' and 1B'' of this standard, attached to the standard seat assembly is a child restraint anchorage system conforming to the specifications of Standard No. 225 (§ 571.225), in the case of add-on child restraint systems other than belt-positioning booster seats.

* * * * *

S6.1.2 *Dynamic test procedure.*

(a) * * *

(1) *Test configuration I.*

(i) *Child restraints other than belt-positioning seats.* Attach the child restraint in any of the following manners specified in S6.1.2(a)(1)(i)(A) through (D), unless otherwise specified in this standard.

(A) Install the child restraint system at the center seating position of the

standard seat assembly, in accordance with the manufacturer's instructions provided with the system pursuant to S5.6.1, except that the standard lap belt is used and, if provided, a tether strap may be used.

(B) Except for a child harness, a backless child restraint system with a tether strap, and a restraint designed for use by physically handicapped children, install the child restraint system at the center seating position of the standard seat assembly as in S6.1.2(a)(1)(i)(A), except that no tether strap (or any other supplemental device) is used.

(C) Install the child restraint system using the child restraint anchorage system at the center seating position of the standard seat assembly in accordance with the manufacturer's instructions provided with the system pursuant to S5.6.1. The tether strap, if one is provided, is attached to the tether anchorage.

(D) Install the child restraint system using only the lower anchorages of the child restraint anchorage system as in S6.1.2(a)(1)(i)(C). No tether strap (or any other supplemental device) is used.

(ii) *Belt-positioning seats.* A belt-positioning seat is attached to either outboard seating position of the standard seat assembly in accordance with the manufacturer's instructions provided with the system pursuant to S5.6.1 using only the standard vehicle lap and shoulder belt and no tether (or any other supplemental device).

(iii) In the case of each built-in child restraint system, activate the restraint in the specific vehicle shell or the specific vehicle, in accordance with the manufacturer's instructions provided in accordance with S5.6.2.

* * * * * *

(d) * * *

(1) * * *

(iii) When attaching a child restraint system to the tether anchorage and the child restraint anchorage system on the standard seat assembly, tighten all belt systems used to attach the restraint to the standard seat assembly to a tension of not less than 53.5 N and not more than 67 N, as measured by a load cell or other suitable means used on the webbing portion of the belt.

* * * * *

BILLING CODE 4910–59–P

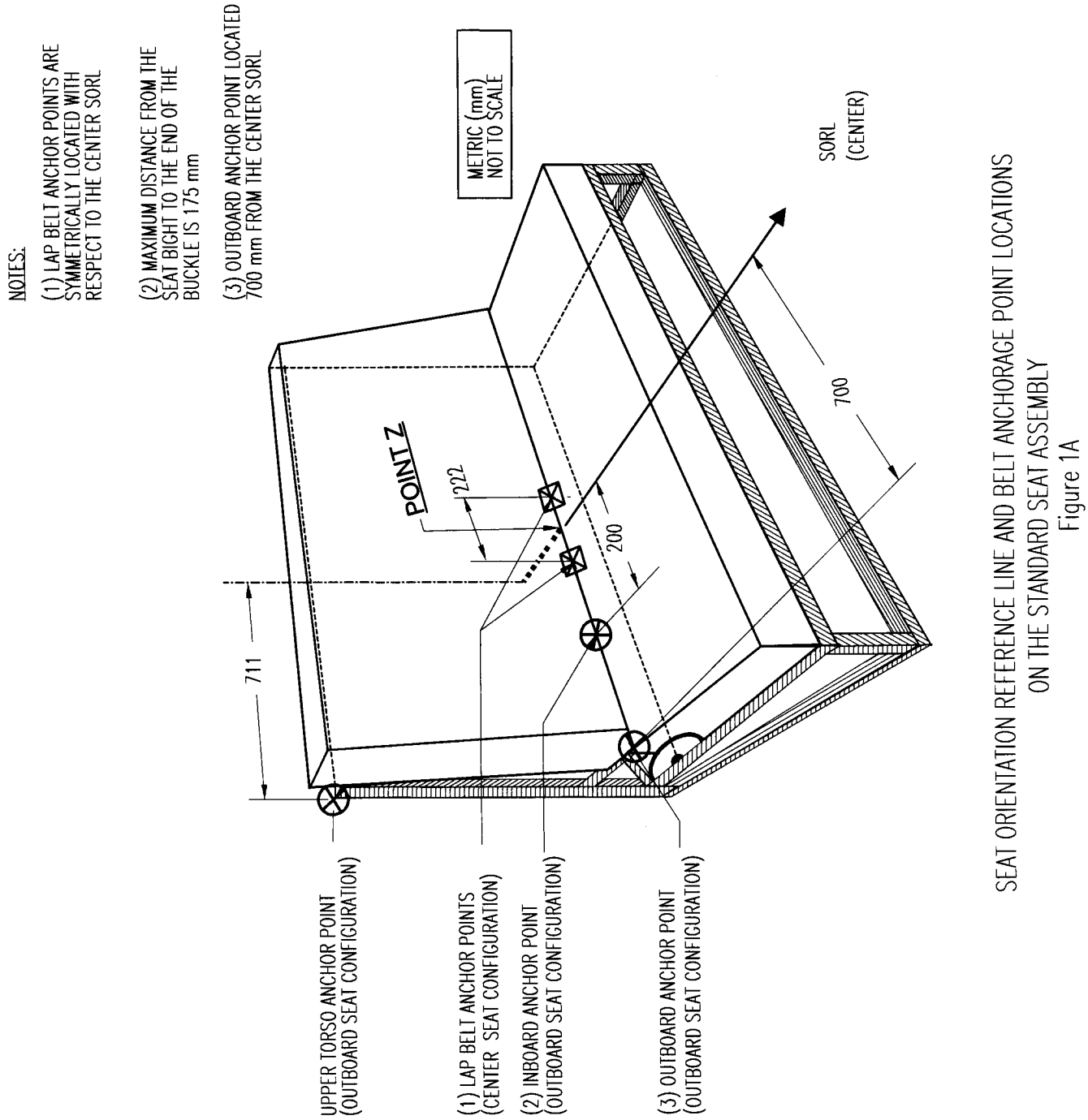

SEAT ORIENTATION REFERENCE LINE AND BELT ANCHORAGE POINT LOCATIONS ON THE STANDARD SEAT ASSEMBLY

Figure 1A

NOTES:

(1i) UNIVERSAL LOWER ANCHOR BARS 6 mm DIAMETER AND 25 mm LENGTH

(1ii) TRANSVERSE HORIZONTAL DISTANCE BETWEEN THE CENTER OF THE UNIVERSAL ANCHOR BARS AND THE VERTICAL PLANE LOWER CONTAINING SORL AT THE CENTER OF THE SEAT ASSEMBLY IS 140 mm.

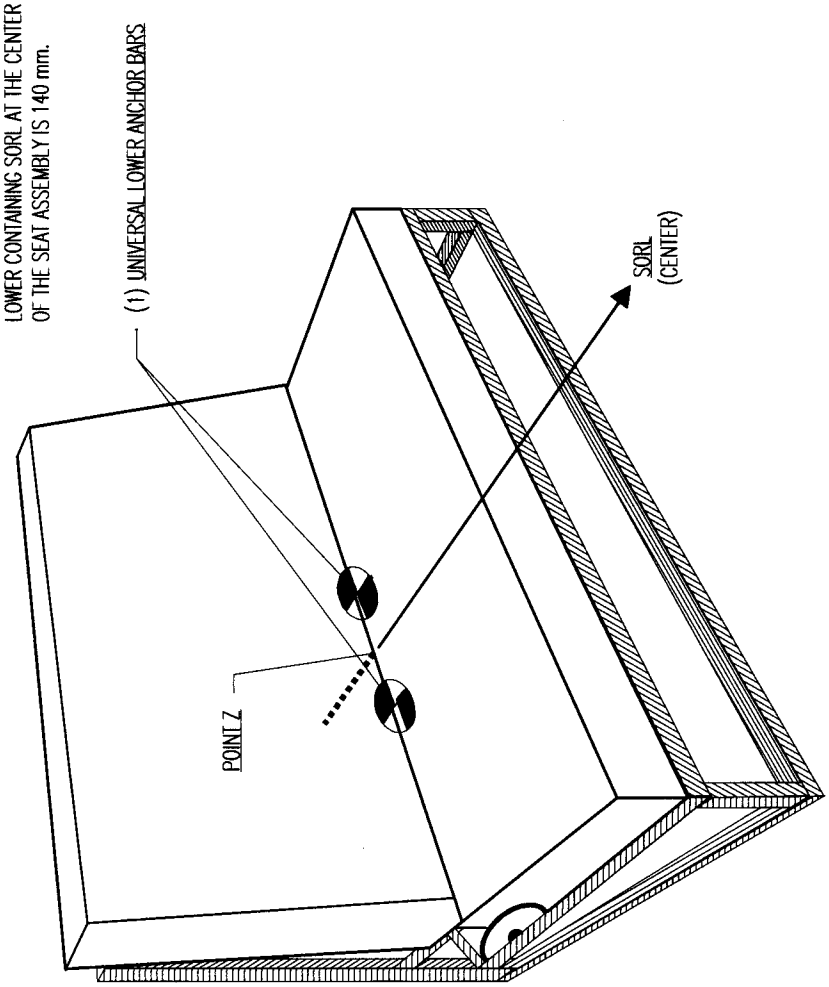

SEAT ORIENTATION REFERENCE LINE AND LOCATION OF UNIVERSAL CHILD RESTRAINT ANCHORAGE SYSTEM ON THE STANDARD SEAT ASSEMBLY

Figure 1A'

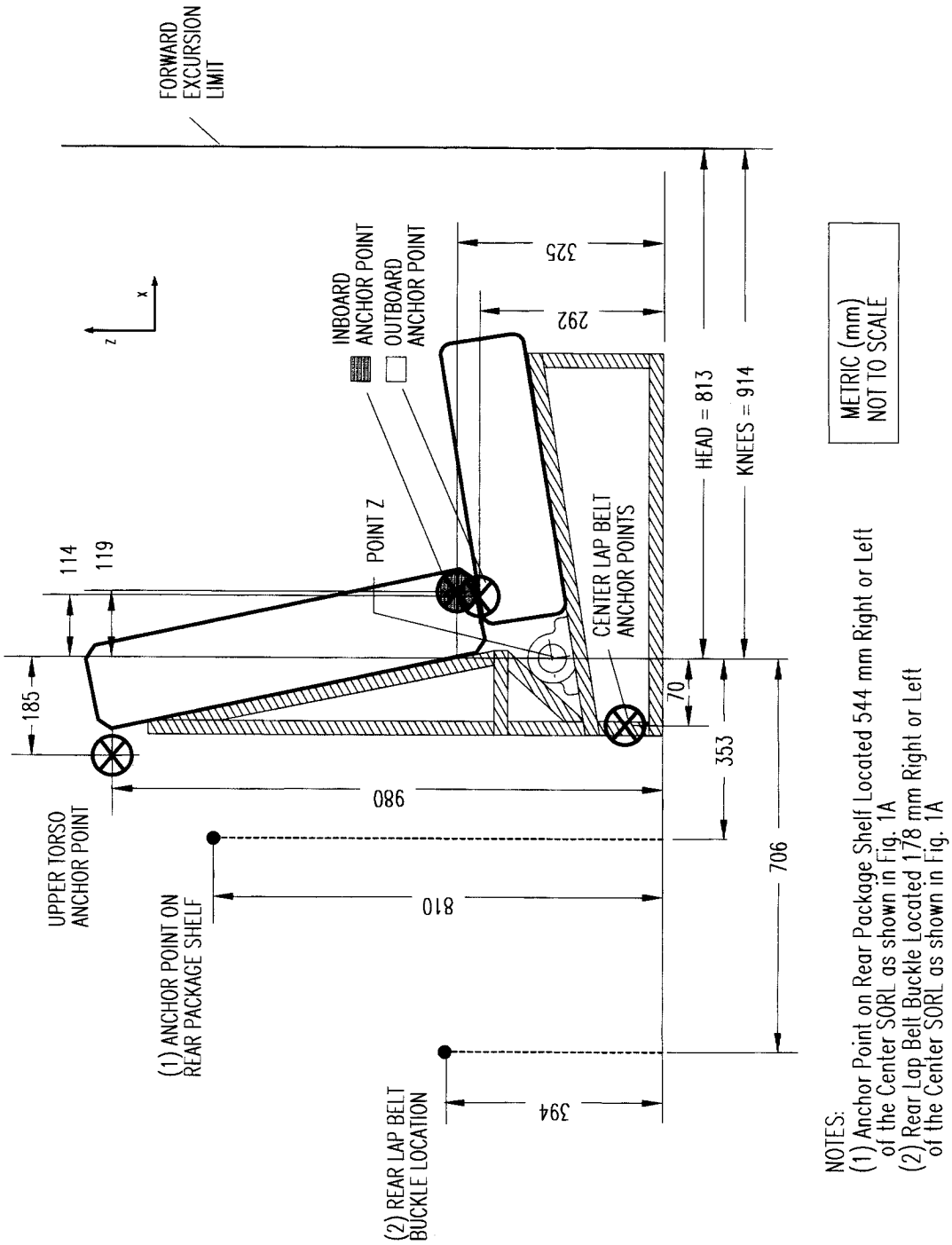

NOTES:
(1) Anchor Point on Rear Package Shelf Located 544 mm Right or Left of the Center SORL as shown in Fig. 1A
(2) Rear Lap Belt Buckle Located 178 mm Right or Left of the Center SORL as shown in Fig. 1A

LOCATION OF BELT ANCHORAGE POINTS AND FORWARD EXCURSION LIMITS ON THE STANDARD SEAT ASSEMBLY
Figure 1B

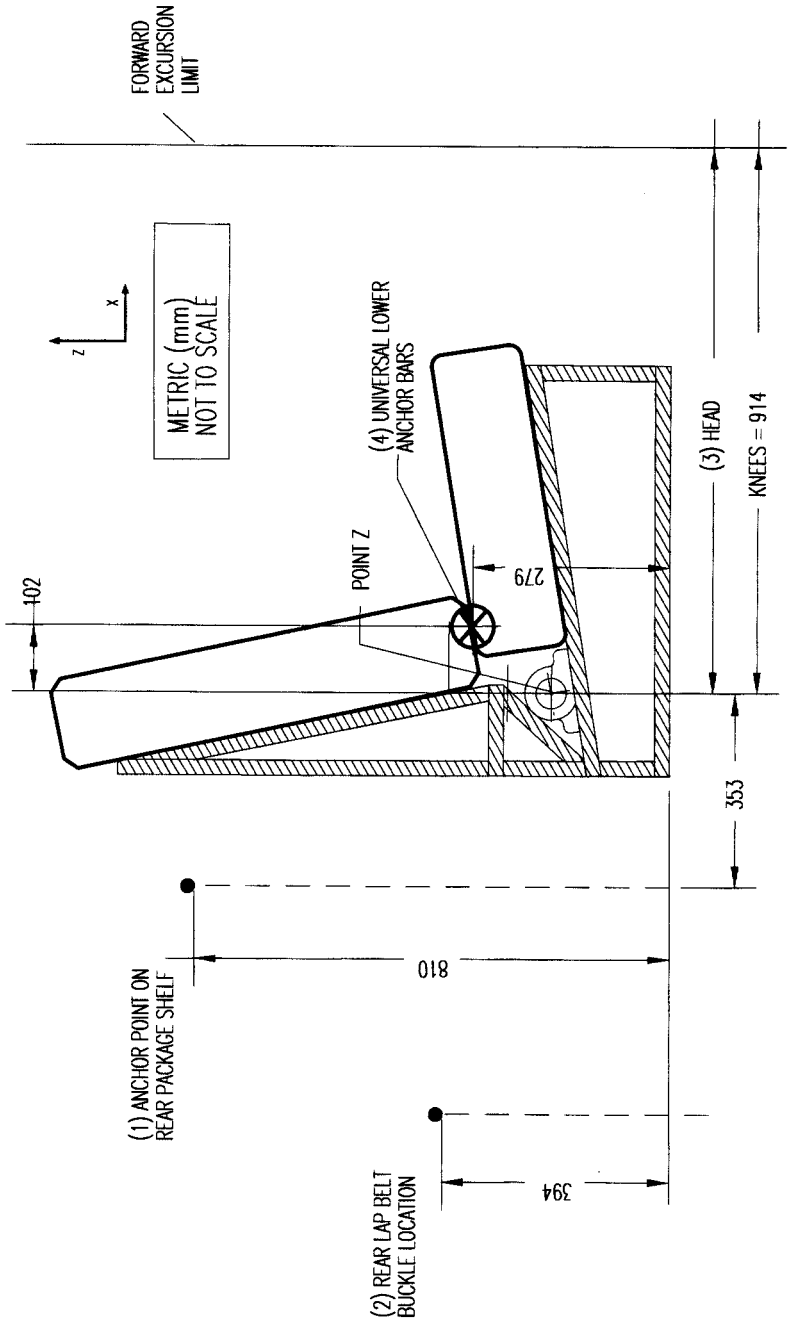

NOTES:
(1) Anchor Point on Rear Package Shelf Located 544 mm Right or Left of the Center SORL as shown in Fig. 1A'
(2) Rear Lap Belt Buckle Located 178 mm Right or Left of the Center SORL as shown in Fig. 1A'
(3) Head Excursion Limit is: (i) 720 mm with Tether Attached and (ii) 813 mm with Tether Unattached
(4) Universal Lower Anchor Bars Located 102 mm Forward of Pt Z and 279 mm Upward from Floor

LOCATION OF UNIVERSAL CHILD RESTRAINT ANCHORAGE SYSTEM AND FORWARD EXCURSION LIMITS FOR THE STANDARD SEAT ASSEMBLY

Figure 1B'

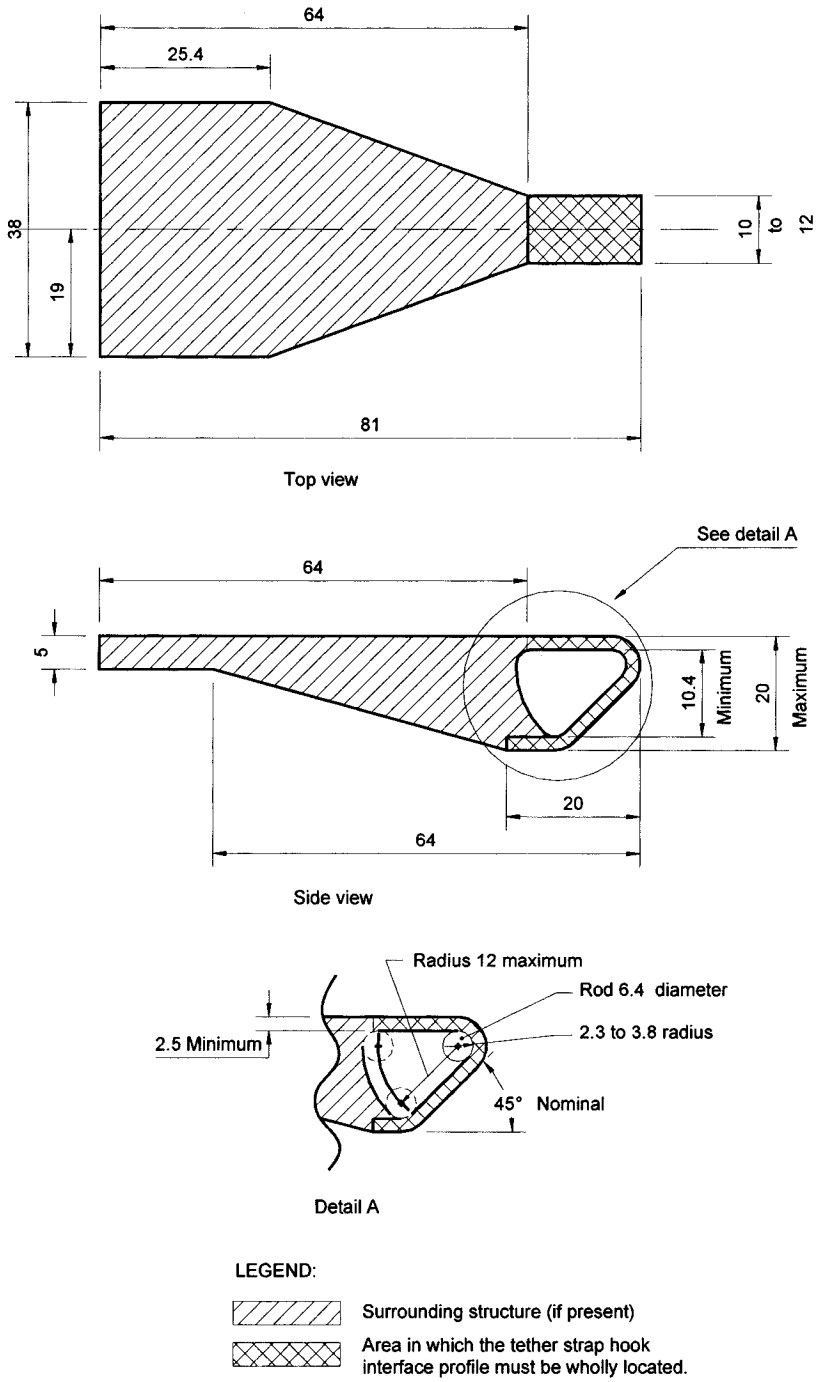

Notes

1. Dimensions in mm, except where otherwise indicated
2. Drawing not to scale

Figure 11 -- Interface Profile of Tether Hook

BILLING CODE 4910–59–C

4. Section 571.225 is added to read as follows:

§ 571.225 Standard No. 225; Child restraint anchorage systems.

S1. *Purpose and scope.* This standard establishes requirements for child restraint anchorage systems to ensure their proper location and strength for the effective securing of child restraints, to reduce the likelihood of the anchorage systems' failure, and to increase the likelihood that child restraints are properly secured and thus more fully achieve their potential effectiveness in motor vehicles.

S2. *Application.* This standard applies to passenger cars; to trucks and multipurpose passenger vehicles with a gross vehicle weight rating (GVWR) of 3,855 kilograms (8,500 pounds) or less, except walk-in van-type vehicles and vehicles manufactured to be sold exclusively to the U.S. Postal Service; and to buses (including school buses) with a GVWR of 4,536 kg (10,000 lb) or less.

S3. *Definitions.*

Child restraint anchorage means any vehicle component, other than Type I or Type II seat belts, that is involved in transferring loads generated by a child restraint system to the vehicle structure.

Child restraint anchorage system means a vehicle system that is designed for attaching a child restraint system to a vehicle at a particular designated seating position, consisting of:

(a) Two lower anchorages meeting the requirements of S9; and

(b) A tether anchorage meeting the requirements of S6.

Child restraint fixture (CRF) means the fixture depicted in Figures 1 and 2 of this standard that simulates the dimensions of a child restraint system, and that is used to determine the space required by the child restraint system and the location and accessibility of the lower anchorages.

Rear designated seating position means any designated seating position (as that term is defined at § 571.3) that is rearward of the front seats(s).

SFAD 1 means Static Force Application Device 1 shown in Figures 12 to 16 of this standard.

SFAD 2 means Static Force Application Device 2 shown in Figures 17 and 18 of this standard.

Tether anchorage means a user-ready, permanently installed vehicle system that transfers loads from a tether strap through the tether hook to the vehicle structure and that accepts a tether hook.

Tether strap means a strap that is secured to the rigid structure of the seat back of a child restraint system, and is connected to a tether hook that transfers the load from that system to the tether anchorage.

Tether hook means a device, illustrated in Figure 11 of Standard No. 213 (§ 571.213), used to attach a tether strap to a tether anchorage.

S4. *General vehicle requirements.*

S4.1 Each tether anchorage and each child restraint anchorage system installed, either voluntarily or pursuant to this standard, in any new vehicle manufactured on or after September 1, 1999, shall comply with the configuration, location and strength requirements of this standard. The vehicle shall have written information, in English, on using those child restraint anchorages.

S4.2 For passenger cars manufactured on or after September 1, 1999 and before September 1, 2000, not less than 80 percent of the manufacturer's average annual production of vehicles (not including convertibles), as set forth in S13, shall be equipped with a tether anchorage as specified in paragraphs (a), (b) and (c) of S4.2, except as provided in S5.

(a) Each vehicle with three or more rear designated seating positions shall be equipped with a tether anchorage conforming to the requirements of S6 at no fewer than three rear designated seating positions. The tether anchorage of a child restraint anchorage system may count towards the three required tether anchorages. In each vehicle with a designated seating position other than an outboard designated seating position, at least one tether anchorage (with or without the lower anchorages of a child restraint anchorage system) shall be at such a designated seating position. In a vehicle with three or more rows of seating positions, at least one of the tether anchorages (with or without the lower anchorages of a child restraint anchorage system) shall be installed at a seating position in the second row.

(b) Each vehicle with not more than two rear designated seating positions shall be equipped with a tether anchorage at each rear designated seating position. The tether anchorage of a child restraint anchorage system may count toward the required tether anchorages.

(c) Each vehicle without any rear designated seating position shall be equipped with a tether anchorage at each front passenger seating position.

S4.3 Each vehicle manufactured on or after September 1, 2000 and before September 1, 2002, shall be equipped as specified in paragraphs (a) and (b) of S4.3, except as provided in S5.

(a) A specified percentage of each manufacturer's yearly production, as set forth in S14, shall be equipped as follows:

(1) Each vehicle with three or more rear designated seating positions shall be equipped with a child restraint anchorage system at not fewer than two rear designated seating positions. In a vehicle with three or more rows of seating positions, at least one of the child restraint anchorage systems shall be at a seating position in the second row.

(2) Each vehicle with not more than two rear designated seating positions shall be equipped with a child restraint anchorage system at each rear designated seating position.

(b) Each vehicle, including a vehicle that is counted toward the percentage of a manufacturer's yearly production required to be equipped with child restraint anchorage systems, shall be equipped as described in S4.3(b)(1), (2) or (3).

(1) Each vehicle with three or more rear designated seating positions shall be equipped with a tether anchorage conforming to the requirements of S6 at no fewer than three rear designated seating positions. The tether anchorage of a child restraint anchorage system may count towards the three required tether anchorages. In each vehicle with a designated seating position other than an outboard designated seating position, at least one tether anchorage (with or without the lower anchorages of a child restraint anchorage system) shall be at such a designated seating position. In a vehicle with three or more rows of seating positions, at least one of the tether anchorages (with or without the lower anchorages of a child restraint anchorage system) shall be installed at a seating position in the second row.

(2) Each vehicle with not more than two rear designated seating positions shall be equipped with a tether anchorage at each rear designated seating position. The tether anchorage of a child restraint anchorage system may count toward the required tether anchorages.

(3) Each vehicle without any rear designated seating position shall be equipped with a tether anchorage at each front passenger seating position.

S4.4 Vehicles manufactured on or after September 1, 2002 shall be equipped as specified in paragraphs (a) through (c) of S4.4, except as provided in S5.

(a) Each vehicle with three or more rear designated seating positions shall be equipped as specified in S4.4(a)(1) and (2).

(1) Each vehicle shall be equipped with a child restraint anchorage system at not fewer than two rear designated

seating positions. At least one of the child restraint anchorage systems shall be installed at a seating position in the second row in each vehicle that has three or more rows.

(2) Each vehicle shall be equipped with a tether anchorage conforming to the requirements of S6 at a third rear designated seating position. The tether anchorage of a child restraint anchorage system may count towards the third required tether anchorage. In each vehicle with a rear designated seating position other than an outboard designated seating position, at least one tether anchorage (with or without the lower anchorages of a child restraint anchorage system) shall be at such a designated seating position.

(b) Each vehicle with not more than two rear designated seating positions shall be equipped with a child restraint anchorage system at each rear designated seating position.

(c) Each vehicle without any rear designated seating position shall be equipped with a tether anchorage at each front passenger seating position.

S5. *General exceptions.*

(a) Convertibles and school buses are excluded from the requirements to be equipped with tether anchorages.

(b) A vehicle may be equipped with a built-in child restraint system conforming to the requirements of Standard No. 213 (49 CFR 571.213) instead of one of the required tether anchorages or child restraint anchorage systems.

(c)(1) Each vehicle that—

(i) Does not have a rear designated seating position and that thus meets the conditions in S4.5.4.1(a) of Standard No. 208 (§ 571.208); and

(ii) Has an air bag on-off switch meeting the requirements of S4.5.4 of Standard No. 208, shall have a child restraint anchorage system for a designated passenger seating position in the front seat, instead of a tether anchorage that is required for a front passenger seating position.

(2) Each vehicle that—

(i) Has a rear designated seating position and meets the conditions in S4.5.4.1(a) of Standard No. 208 (§ 571.208); and

(ii) Has an air bag on-off switch meeting the requirements of S4.5.4 of Standard 208, shall have a child restraint anchorage system for a designated passenger seating position in the front seat, instead of a child restraint anchorage system that is required for the rear seat.

(d) A vehicle that does not have an air bag on-off switch meeting the requirements of S4.5.4 of Standard No. 208 (§ 571.208), shall not have any child restraint anchorage system installed at a front designated seating position.

S6. *Requirements for tether anchorages.*

S6.1 *Configuration of the tether anchorage.* Each tether anchorage shall:

(a) Permit the attachment of a tether hook of a child restraint system meeting the configuration and geometry specified in Figure 11 of Standard No. 213 (§ 571.213);

(b) Be accessible without the need for any tools other than a screwdriver or coin;

(c) Once accessed, be ready for use without the need for any tools; and

(d) Be sealed to prevent the entry of exhaust fumes into the passenger compartment.

S6.2 *Location of the tether anchorage.*

Subject to S6.2(a) and (b), the part of each tether anchorage that attaches to a tether hook shall be located within the shaded zone shown in Figures 3 to 7 of this standard of the designated seating position for which it is installed, such that—

(a) The H-point of a three-dimensional H-point machine, that is described in SAE Standard J826 (June 1992), (incorporation by reference; see § 571.5), and whose position relative to the shaded zone is specified in Figures 3 to 7 of this standard, is located—

(1) At the actual H-point of the seat, as defined in section 2.2.11.3 of SAE Recommended Practice J1100 (June 1993), (incorporation by reference; see § 571.5), at the full rearward and downward position of the seat; or

(2) In the case of a designated seating position that has a child restraint anchorage system, midway between vertical longitudinal planes passing through the lateral center of the bar in each of the two lower anchorages of that system; and

(b) The back pan of the H-point machine is at the same angle from the vertical as the vehicle seat back with the seat adjusted to its full rearward and full downward position and the seat back in its most upright position.

S6.2.1.1 In the case of passenger cars and multipurpose passenger vehicles manufactured before September 1, 2004, the part of each user-ready tether anchorage that attaches to a tether hook may, at the manufacturer's option (with said option selected prior to, or at the time of, certification of the vehicle), instead of complying with S6.2.1, be located within the shaded zone shown in Figures 8 to 11 of this standard of the designated seating position for which it is installed, relative to the shoulder reference point of the three dimensional H-point machine described in section 3.1 of SAE Standard J826 (June 1992), (incorporation by reference; see § 571.5), such that—

(a) The H-point of the three dimensional H-point machine is located—

(1) At the actual H-point of the seat, as defined in section 2.2.11.3 of SAE Recommended Practice J1100 (June 1993), (incorporation by reference; see § 571.5), at the full rearward and downward position of the seat; or

(2) In the case of a designated seating position that has a child restraint anchorage system, midway between vertical longitudinal planes passing through the lateral center of the bar in each of the two lower anchorages of that system; and

(b) The back pan of the H-point machine is at the same angle to the vertical as the vehicle seat back with the seat adjusted to its full rearward and full downward position and the seat back in its most upright position.

S6.2.1.2 In the case of a vehicle that—

(a) Has a user-ready tether anchorage for which no part of the shaded zone shown in Figures 3 to 7 of this standard of the designated seating position for which the anchorage is installed is accessible without removing a seating component of the vehicle; and

(b) Has a tether strap routing device that is—

(1) Not less than 65 mm behind the torso line for that seating position, in the case of a flexible routing device or a deployable routing device, measured horizontally and in a vertical longitudinal plane; or

(2) Not less than 100 mm behind the torso line for that seating position, in the case of a fixed rigid routing device, measured horizontally and in a vertical longitudinal plane, the part of that anchorage that attaches to a tether hook may, at the manufacturer's option (with said option selected prior to, or at the time of, certification of the vehicle) be located outside that zone.

S6.3 *Strength requirements for tether anchorages.*

S6.3.1 Subject to S6.3.2, when tested in accordance with S8—

(a) Any point on the tether anchorage must not be displaced more than 125 mm; and

(b) There shall be no complete separation of any anchorage component.

S6.3.2 In vehicles manufactured before September 1, 2004, each user-ready tether anchorage in a row of designated seating positions in a passenger car may, at the manufacturer's option (with said option selected prior to, or at the time of, certification of the vehicle), instead of complying with

S6.3.1, withstand the application of a force of 5,300 N, when tested in accordance with S8.2, such that the anchorage does not release the belt strap specified in S8.2 or allow any point on the tether anchorage to be displaced more than 125 mm.

S6.3.3 In the case of a row of designated seating positions that has more than one tether anchorage, the force referred to in S6.3.1 and S6.3.2 may, at the agency's option, be applied simultaneously to each tether anchorage. However, a particular tether anchorage need not meet further requirements after the lower anchorages of the child restraint anchorage system of the designated seating position at which the tether anchorage is installed have met S9.4.

S7. *Test conditions for testing tether anchorages.*

The test conditions described in paragraphs (a) and (b) of S7 apply to the test procedures in S8.

(a) Vehicle seats are adjusted to their full rearward and full downward position and the seat back is placed in its most upright position.

(b) Head restraints are adjusted in accordance with the manufacturer's instructions, provided pursuant to S12, as to how the head restraints should be adjusted when using the child restraint anchorage system. If instructions with regard to head restraint adjustment are not provided pursuant to S12, the head restraints are adjusted to any position.

S8. *Test procedures.* Each vehicle shall meet the requirements of S6.3 when tested according to the following procedures. Where a range of values is specified, the vehicle shall be able to meet the requirements at all points within the range. For the testing specified in these procedures, the SFAD used in the test has a tether strap consisting of webbing material conforming to the breaking strength and elongation limits (for Type I seat belt assemblies) set forth in S4.2(b) and S4.2(c), respectively, of Standard No. 209 (§ 571.209). The strap is fitted at one end with hardware for applying the force and at the other end with a bracket for attachment to the tether anchorage.

S8.1 Apply the force specified in S6.3, as follows—

(a) Use the following specified test device, as appropriate:

(1) SFAD 1, to test a tether anchorage at a designated seating position that does not have a child restraint anchorage system; or

(2) SFAD 2, to test a tether anchorage at a designated seating position that has a child restraint anchorage system.

(b) Attach the test device to the vehicle belts or to the lower anchorages of the child restraint anchorage system, as appropriate, and attach the test device to the tether anchorage, in accordance with the manufacturer's instructions provided pursuant to S12. All belt systems (including the tether) used to attach the test device are tightened to a tension of not less than 53.5 N and not more than 67 N, as measured by a load cell used on the webbing portion of the belt.

(c) Apply the force—

(1) Initially, in a forward direction parallel to a vertical longitudinal plane and through the Point X on the test device; and

(2) Initially, along a horizontal line or along any line below or above that line that is at an angle to that line of not more than 5 degrees. Apply a preload force of 500 N to measure the angle; and then

(3) Increase the preload pull force to a full force application of 15,000 N within 30 seconds, at an onset rate of not more than 135,000 N/s; and maintain at a 15,000 N level for a minimum of 1 second.

S8.2 Apply the force specified in S6.3 as follows:

(a) Attach a belt strap, and tether hook, to the user-ready tether anchorage. The belt strap extends not less than 250 mm forward from the vertical transverse plane touching the rear top edge of the vehicle seat back, and passes over the top of the vehicle seat back as shown in Figure 19 of this standard;

(b) Apply the force at the end of the belt strap—

(1) Initially, in a forward direction in a vertical longitudinal plane that is parallel to the vehicle's longitudinal centerline;

(2) Initially, along a horizontal line or along any line below or above that line that is at an angle to that line of not more than 20 degrees;

(3) So that the force is attained within 30 seconds, at any onset rate of not more than 135,000 N/s; and

(4) Maintained at a 5,300 N level for a minimum of 1 second.

S9. *Requirements for the lower anchorages of the child restraint anchorage system.*

S9.1 *Configuration of the lower anchorages*

S9.1.1 The lower anchorages shall consist of two bars that—

(a) Are 6 mm ±1 mm in diameter;

(b) Are straight, horizontal and transverse, and whose centroidal longitudinal axes are collinear;

(c) Are not less than 25 mm, but not more than 40 mm in length;

(d) Can be connected to, over their entire length, as specified in paragraph S9.1.1(c), by the connectors of a child restraint system;

(e) Are 280 mm ±1 mm apart, measured from the center of the length of one bar to the center of the length of the other bar;

(f) Are an integral and permanent part of the vehicle; and

(g) Are rigidly attached to the vehicle such that they will not deform more than 5 mm when subjected to a 100 N force in any direction.

S9.2 *Location of the lower anchorages.*

S9.2.1 With adjustable seats adjusted as described in S9.2.2, each lower anchorage bar shall be located so that a vertical transverse plane tangent to the front surface of the bar is:

(a) Not more than 70 mm behind the corresponding point Z of the CRF, measured parallel to the bottom surface of the CRF and in a vertical longitudinal plane, while the CRF is pressed against the seat back by the rearward application of a horizontal force of 5 N at point A on the CRF; and

(b) Not less than 120 mm behind the vehicle seating reference point, measured horizontally and in a vertical longitudinal plane.

S9.2.2 Adjustable seats are adjusted as follows:

(a) Place adjustable seat backs in the manufacturer's nominal design riding position in the manner specified by the manufacturer; and

(b) Place adjustable seats in the full rearward and full downward position.

S9.3 *Adequate fit of the lower anchorages.* Each vehicle and each child restraint anchorage system in that vehicle shall be designed such that the CRF can be placed inside the vehicle and attached to the lower anchorages of each child restraint anchorage system, with adjustable seats adjusted as described in S9.3(a) and (b).

(a) Place adjustable seat backs in the manufacturer's nominal design riding position in the manner specified by the manufacturer; and

(b) Place adjustable seats in the full rearward and full downward position.

S9.4 *Strength of the lower anchorages.*

S9.4.1 When tested in accordance with S11, the lower anchorages shall not allow point X on SFAD 2 to be displaced more than 125 mm when—

(a) A force of 11,000 N is applied in a forward direction in a vertical longitudinal plane that is parallel to the vehicle's longitudinal centerline; and

(b) A force of 5,000 N is applied in a lateral direction in a vertical longitudinal plane that is 75±5 degrees to either side of a vertical longitudinal plane that is parallel to the vehicle's longitudinal centerline.

S9.4.2 In the case of vehicle seat assemblies equipped with more than one child restraint anchorage system, at the agency's option, each child restraint anchorage system may be tested simultaneously or sequentially. Sequential testing may, at the agency's option, include testing one system to the requirement of S9.4.1(a) and another system to S9.4.1(b). However, the lower anchorages of a particular child restraint anchorage system need not meet further requirements after having met S9.4.1(a) or either lateral pull requirement in S9.4.1(b), tested to any of these requirements at the agency's option.

S9.5 *Marking and conspicuity of the lower anchorages.* Each vehicle shall comply with S9.5(a) or (b).

(a) Above each bar installed pursuant to S4, the vehicle shall be permanently marked with a circle:

(1) That is not less than 13 mm in diameter;

(2) Whose color contrasts with its background; and

(3) That is located on each seat back such that its center is not less than 50 mm and not more than 75 mm above the bar, and in the vertical longitudinal plane that passes through the center of the bar.

(b) The vehicle shall be configured such that each of the bars installed pursuant to S4 is visible, without the compression of the seat cushion or seat back, when the bar is viewed, in a vertical longitudinal plane passing through the center of the bar, along a line making an upward 30 degree angle with a horizontal plane.

S10. *Test conditions for testing the lower anchorages.* The test conditions described in this paragraph apply to the test procedures in S11.

(a) Vehicle seats are adjusted to their full rearward and full downward position and the seat back in its most upright position.

(b) Head restraints are adjusted in accordance with the manufacturer's instructions, provided pursuant to S12, as to how the head restraints should be adjusted when using the child restraint anchorage system. If instructions with regard to head restraint adjustment are not provided pursuant to S12, the head restraints are adjusted to any position.

S11. *Test procedure.* Each vehicle shall meet the requirements of S9.4 when tested according to the following procedures. Where a range of values is specified, the vehicle shall be able to meet the requirements at all points within the range.

(a) *Forward force direction.* Place SFAD 2 in the vehicle seating position and attach it to the two lower anchorages of the child restraint anchorage system. Do not attach the tether anchorage. Apply a preload force of 500 N at point X of the test device. Increase the preload pull force to a full force application of 11,000 N within 30 seconds, with an onset rate not exceeding 135,000 N per second, and maintain the 11,000 N level for 10 seconds.

(b) *Lateral force direction.* Place SFAD 2 in the vehicle seating position and attach it to the two lower anchorages of the child restraint anchorage system. Do not attach the tether anchorage. Apply a preload force of 500 N at point X of the test device. Increase the preload pull force to a full force application of 5,000 N within 30 seconds, with an onset rate not exceeding 135,000 N per second, and maintain the 5,000 N level for 10 seconds.

S12. *Written instructions.* The vehicle must provide written instructions, in English, for using the tether anchorages and the child restraint anchorage system in the vehicle. If the vehicle has an owner's manual, the instructions must be in that manual. The instructions shall:

(a) Indicate which seating positions in the vehicle are equipped with tether anchorages and child restraint anchorage systems;

(b) In the case of vehicles required to be marked as specified in paragraph S9.5(a), explain the meaning of markings provided to locate the lower anchorages of child restraint anchorage systems; and

(c) Include instructions that provide a step-by-step procedure, including diagrams, for properly attaching a child restraint system to the tether anchorages and the child restraint anchorage systems.

S13. *Tether anchorage phase-in requirements for passenger cars manufactured on or after September 1, 1999 and before September 1, 2000.*

S13.1 Passenger cars manufactured on or after September 1, 1999 and before September 1, 2000 shall comply with S13.1.1 through S13.2. At anytime during the production year ending August 31, 2000, each manufacturer shall, upon request from the Office of Vehicle Safety Compliance, provide information identifying the passenger cars (by make, model and vehicle identification number) that have been certified as complying with the tether anchorage requirements of this standard. The manufacturer's designation of a passenger car as a certified vehicle is irrevocable.

S13.1.1 Subject to S13.2, for passenger cars manufactured on or after September 1, 1999 and before September 1, 2000, the number of vehicles complying with S4.2 shall be not less than 80 percent of:

(a) The manufacturer's average annual production of passenger cars manufactured on or after September 1, 1996 and before September 1, 1999; or

(b) The manufacturer's production of passenger cars manufactured on or after September 1, 1999 and before September 1, 2000.

S13.1.2 For the purpose of calculating average annual production of vehicles for each manufacturer and the number of vehicles manufactured by each manufacturer under S13.1.1, a vehicle produced by more than one manufacturer shall be attributed to a single manufacturer as provided in S13.1.2(a) through (c), subject to S13.2.

(a) A vehicle which is imported shall be attributed to the importer.

(b) A vehicle manufactured in the United States by more than one manufacturer, one of which also markets the vehicle, shall be attributed to the manufacturer which markets the vehicle.

(c) A vehicle produced by more than one manufacturer shall be attributed to any one of the vehicle's manufacturers specified by an express written contract, reported to the National Highway Traffic Safety Administration under 49 CFR part 596, between the manufacturer so specified and the manufacturer to which the vehicle would otherwise be attributed under S13.1.2(a) or (b).

S13.2 For the purposes of calculating average annual production of passenger cars for each manufacturer and the number of passenger cars manufactured by each manufacturer under S13.1, each passenger car that is excluded from the requirement to provide tether anchorages is not counted.

S14. *Lower anchorages phase-in requirements for vehicles manufactured on or after September 1, 2000 and before September 1, 2002.*

S14.1 Vehicles manufactured on or after September 1, 2000 and before September 1, 2002 shall comply with S14.1.1 through S14.1.2. At anytime during the production years ending August 31, 2001, and August 31, 2002, each manufacturer shall, upon request from the Office of Vehicle Safety Compliance, provide information identifying the vehicles (by make, model and vehicle identification number) that have been certified as complying with the child restraint anchorage requirements of this standard. The manufacturer's designation of a vehicle as a certified vehicle is irrevocable.

S14.1.1 *Vehicles manufactured on or after September 1, 2000 and before*

September 1, 2001. Subject to S14.4, for vehicles manufactured on or after September 1, 2000 and before September 1, 2001, the number of vehicles complying with S4.3 shall be not less than 20 percent of:

(a) The manufacturer's average annual production of vehicles manufactured on or after September 1, 1997 and before September 1, 2000; or

(b) The manufacturer's production on or after September 1, 2000 and before September 1, 2001.

S14.1.2 *Vehicles manufactured on or after September 1, 2001 and before September 1, 2002.* Subject to S14.4, for vehicles manufactured on or after September 1, 2001 and before September 1, 2002, the number of vehicles complying with S4.3 shall be not less than 50 percent of:

(a) The manufacturer's average annual production of vehicles manufactured on or after September 1, 1998 and before September 1, 2001; or

(b) The manufacturer's production on or after September 1, 2001 and before September 1, 2002.

S14.2 *Vehicles produced by more than one manufacturer.*

S14.2.1 For the purpose of calculating average annual production of vehicles for each manufacturer and the number of vehicles manufactured by each manufacturer under S14.1.1 through S14.1.2, a vehicle produced by more than one manufacturer shall be attributed to a single manufacturer as follows, subject to S14.2.2.

(a) A vehicle which is imported shall be attributed to the importer.

(b) A vehicle manufactured in the United States by more than one manufacturer, one of which also markets the vehicle, shall be attributed to the manufacturer which markets the vehicle.

S14.2.2 A vehicle produced by more than one manufacturer shall be attributed to any one of the vehicle's manufacturers specified by an express written contract, reported to the National Highway Traffic Safety Administration under 49 CFR part 596, between the manufacturer so specified and the manufacturer to which the vehicle would otherwise be attributed under S14.2.1.

S14.3 *Alternative phase-in schedule for final-stage manufacturers and alterers.* A final-stage manufacturer or alterer may, at its option, comply with the requirements set forth in S14.3 (a) and (b) instead of complying with the requirements set forth in S14.1.1 through S14.1.2.

(a) Vehicles manufactured on or after September 1, 2000 and before September 1, 2002 are not required to comply with the requirements specified in this standard.

(b) Vehicles manufactured on or after September 1, 2002 shall comply with the requirements specified in this standard.

S14.4 For the purposes of calculating average annual production of vehicles for each manufacturer and the number of vehicles manufactured by each manufacturer under S14.1.1 and S14.1.2, each vehicle that is excluded from the requirement to provide child restraint anchorage systems is not counted.

BILLING CODE 4910–59–P

Figures to § 571.225

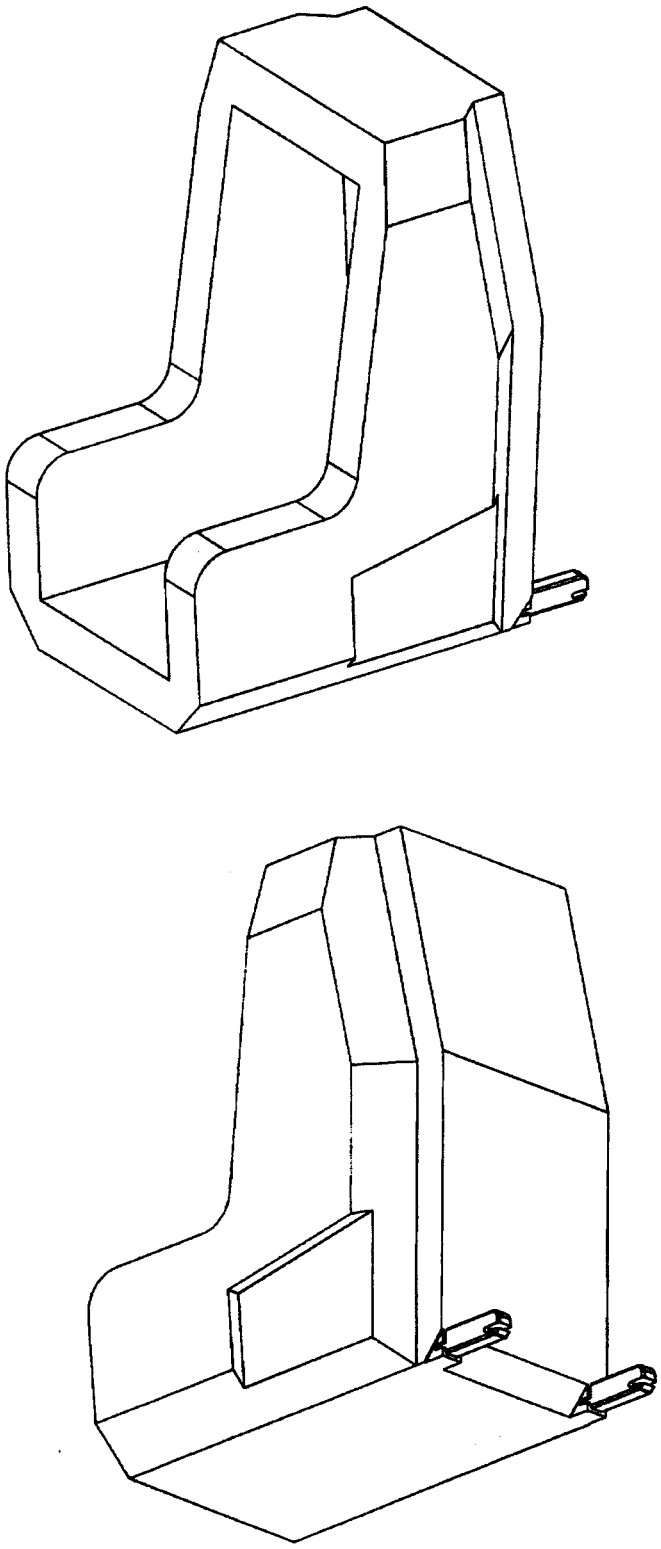

Figure 1 – Child restraint fixture (CRF)

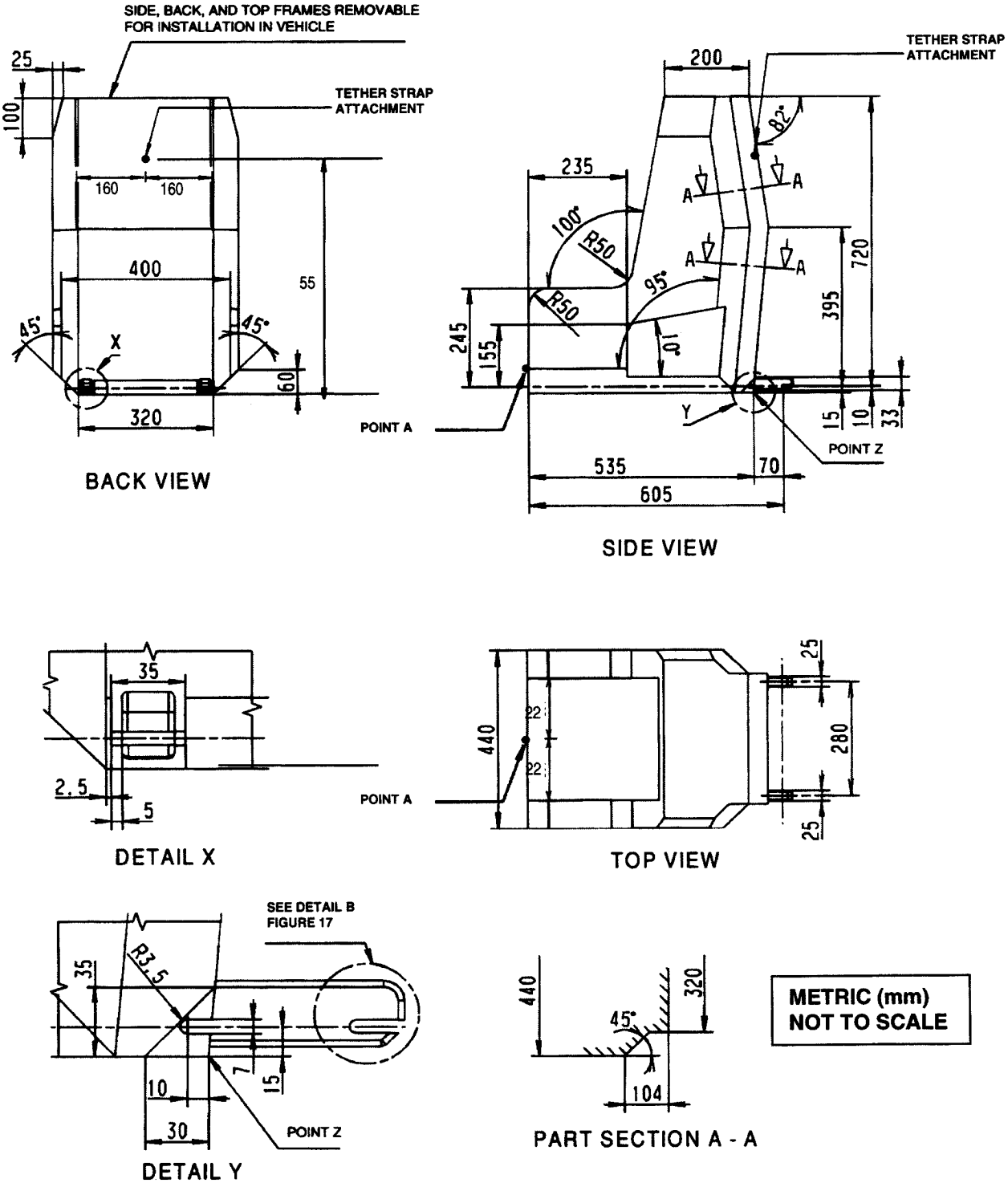

Figure 2 — Child restraint fixture (CRF)

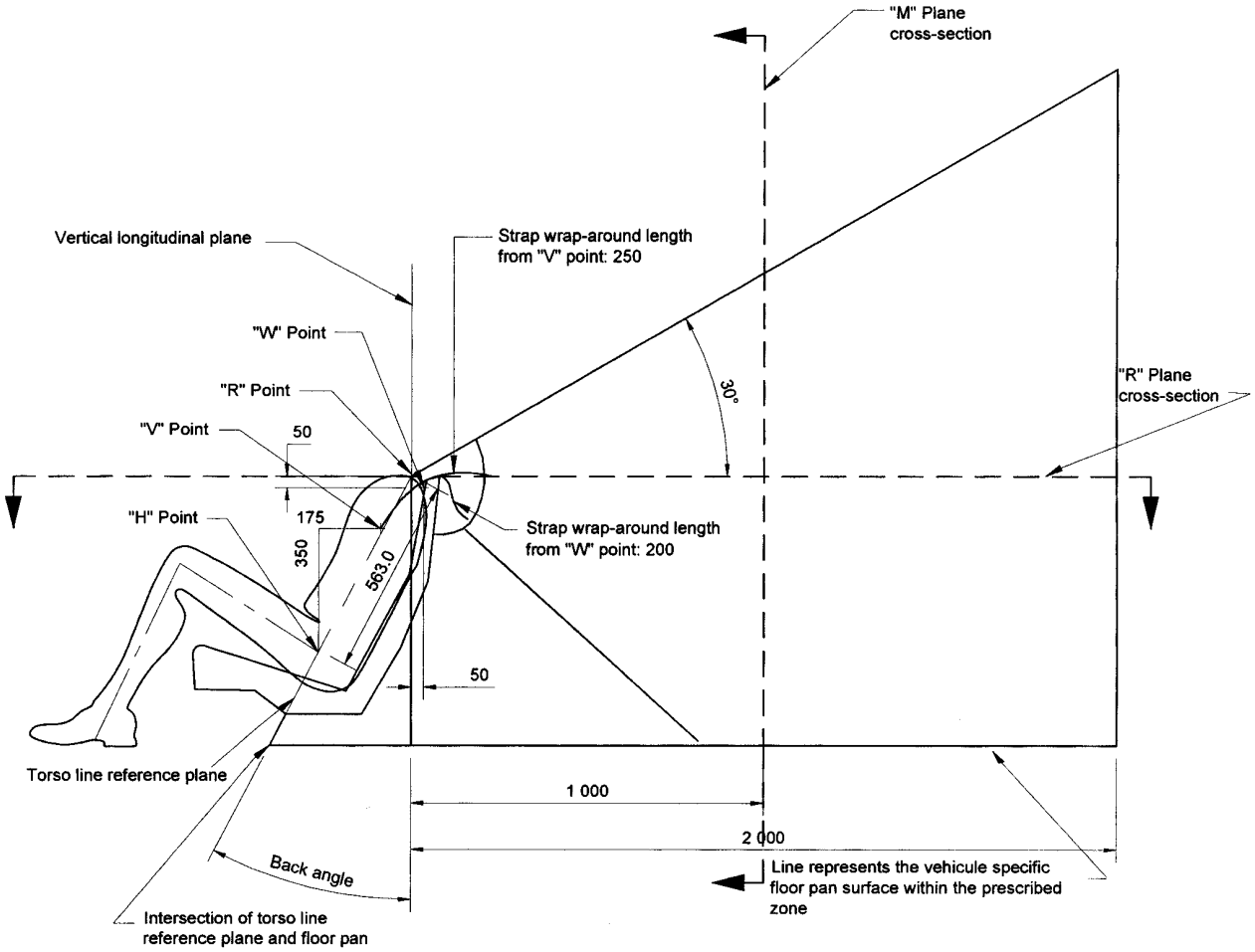

Notes

1. Dimensions in mm, except where otherwise indicated
2. Portion of user-ready tether anchorage that is designed to bind with the tether strap hook to be located within shaded zone
3. Drawing not to scale
4. "R" Point: Shoulder reference point
5. "V" Point: V-reference point, 350 mm vertically above and 175 mm horizontally back from H-point
6. "W" Point: W-reference point, 50 mm vertically below and 50 mm horizontally back from "R" Point
7. "M" Plane: M-reference plane, 1 000 mm horizontally back from "R" Point

Figure 3 -- Side View, User-ready Tether Anchorage Location

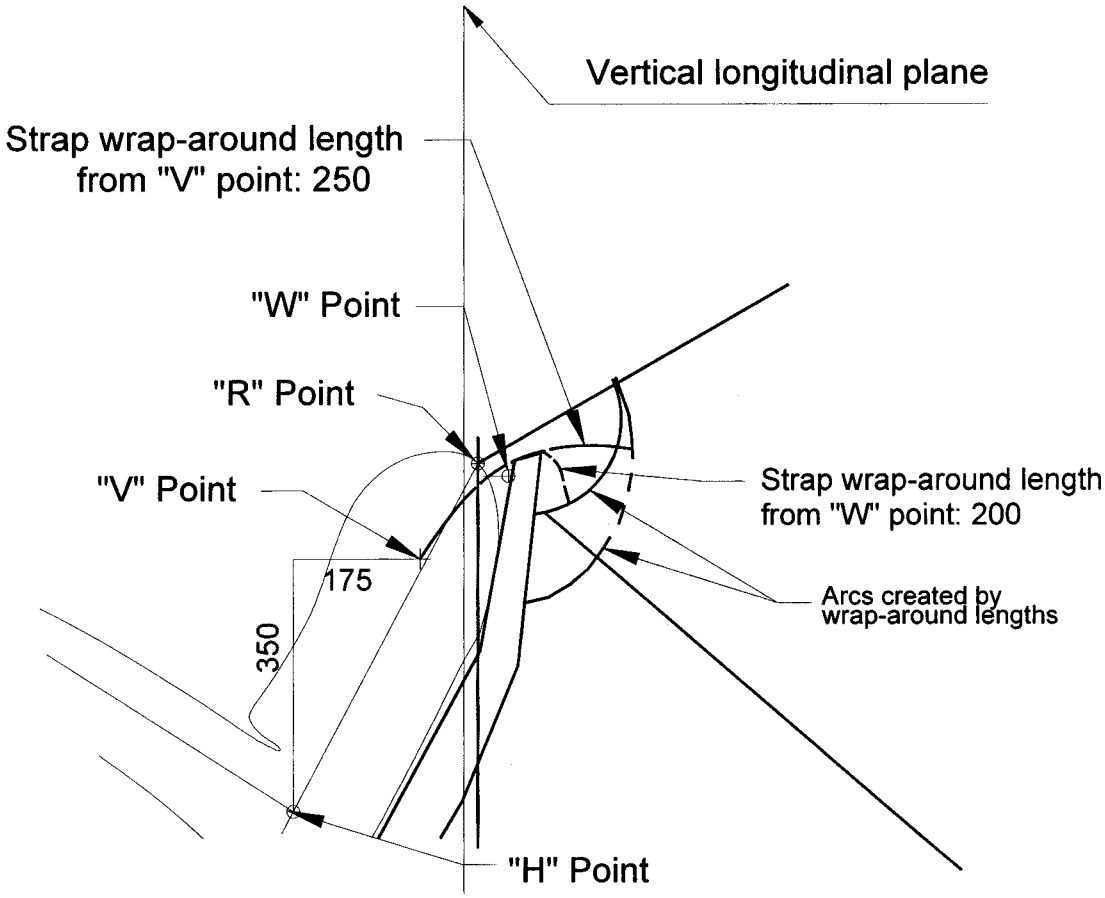

Notes

1. Dimensions in mm, except where otherwise indicated
2. Portion of user-ready tether anchorage that is designed to bind with the tether strap hook to be located within shaded zone
3. Drawing not to scale
4. "R" Point: Shoulder reference point
5. "V" Point: V-reference point, 350 mm vertically above and 175 mm horizontally back from H-point
6. "W" Point: W-reference point, 50 mm vertically below and 50 mm horizontally back from "R" Point
7. "M" Plane: M-reference plane, 1 000 mm horizontally back from "R" Point

Figure 4 -- Enlarged Side View of StrapWrap-around Area, User-ready Tether Anchorage Location

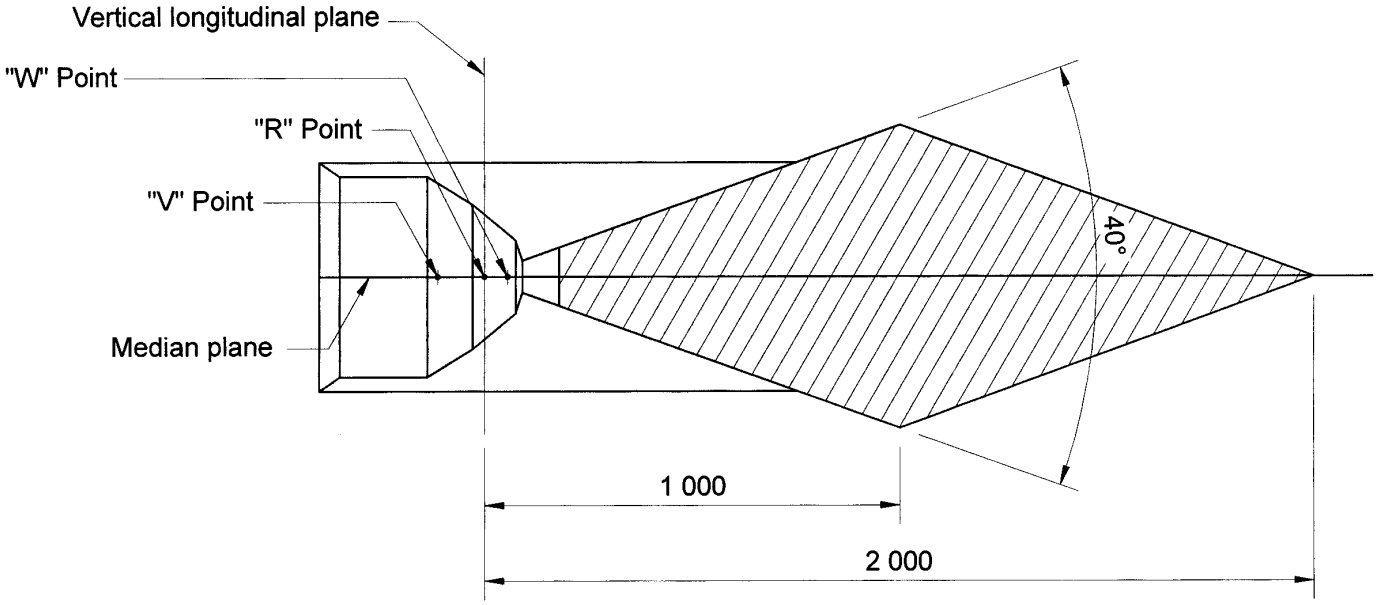

Notes

1. Dimensions in mm, except where otherwise indicated
2. Portion of user-ready tether anchorage that is designed to bind with the tether strap hook to be located within shaded zone
3. Drawing not to scale
4. "R" Point: Shoulder reference point
5. "V" Point: V-reference point, 350 mm vertically above and 175 mm horizontally back from H-point
6. "W" Point: W-reference point, 50 mm vertically below and 50 mm horizontally back from "R" Point

Figure 5 -- Plan View (R-plane Cross Section), User-ready Tether Anchorage Location

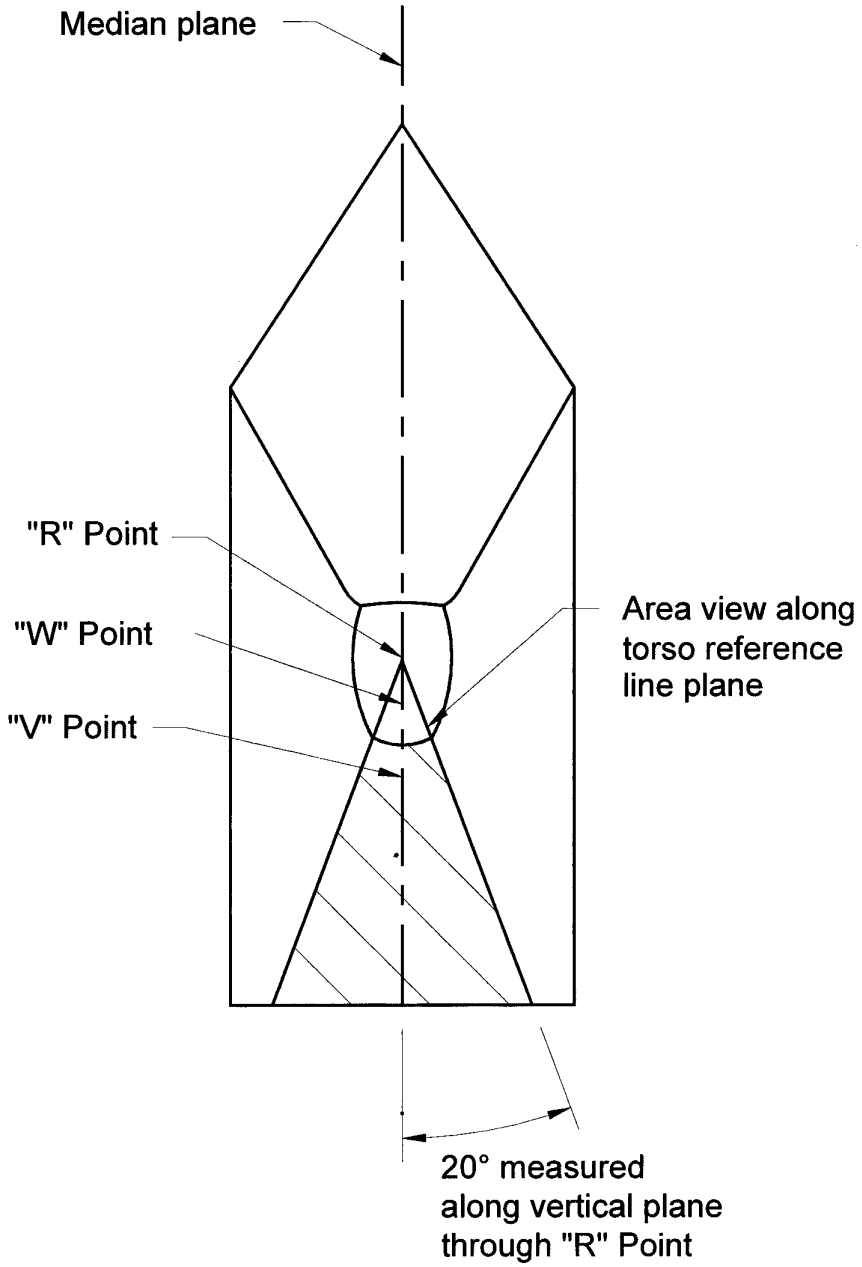

Notes

1. Portion of user-ready tether anchorage that is designed to bind with the tether strap hook to be located within shaded zone
2. Drawing not to scale
3. "R" Point: Shoulder reference point
4. "V" Point: V-reference point, 350 mm vertically above and 175 mm horizontally back from H-point
5. "W" Point: W-reference point, 50 mm vertically below and 50 mm horizontally back from "R" Point

Figure 6 -- Front View, User-ready Tether Anchorage Location

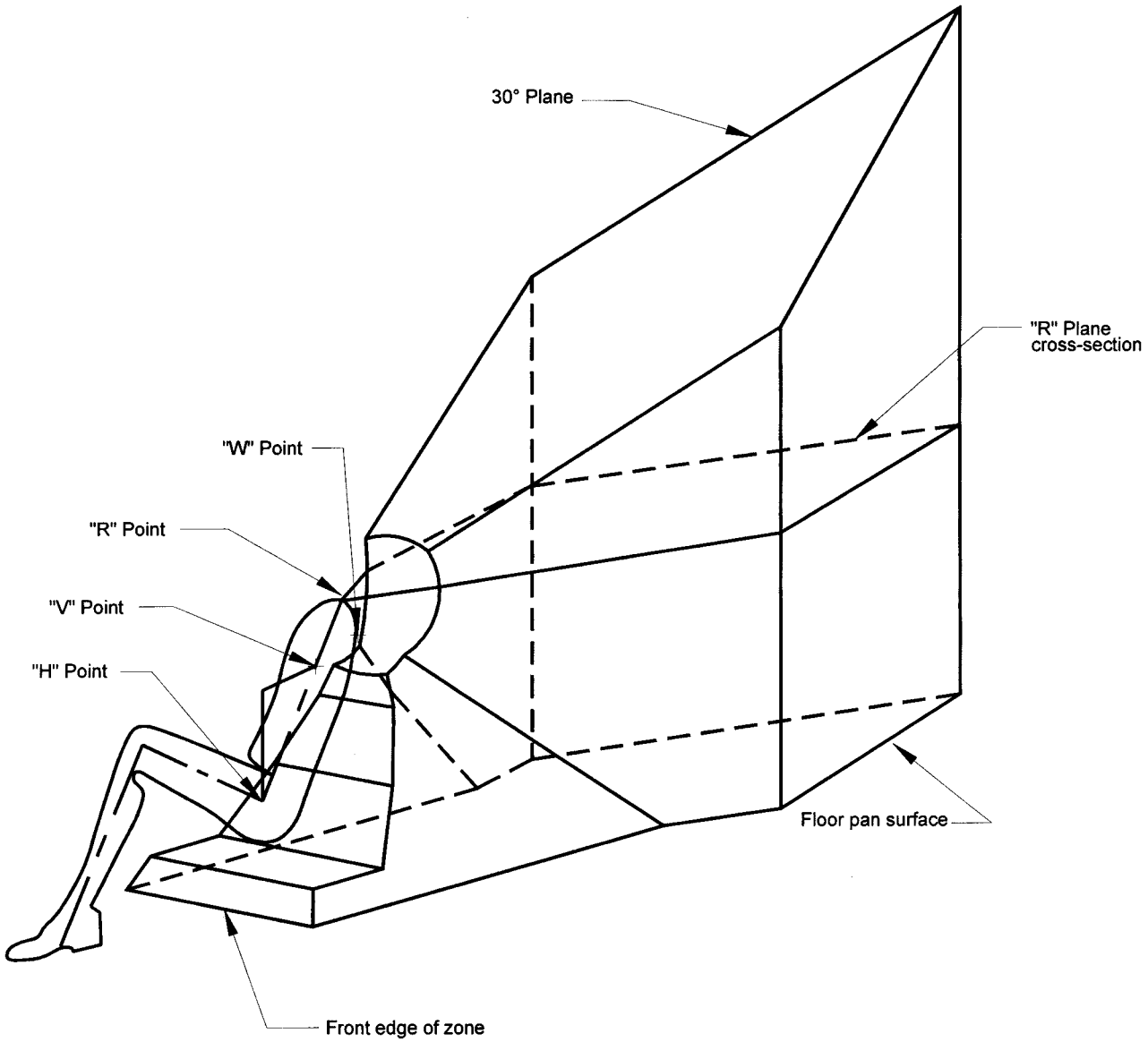

Notes

1. Portion of user-ready tether anchorage that is designed to bind with the tether strap hook to be located within shaded zone
2. Drawing not to scale
3. "R" Point: Shoulder reference point
4. "V" Point: V-reference point, 350 mm vertically above and 175 mm horizontally back from H-point
5. "W" Point: W-reference point, 50 mm vertically below and 50 mm horizontally back from "R" Point

Figure 7 -- Three-dimensional Schematic View of User-ready Tether Anchorage Location

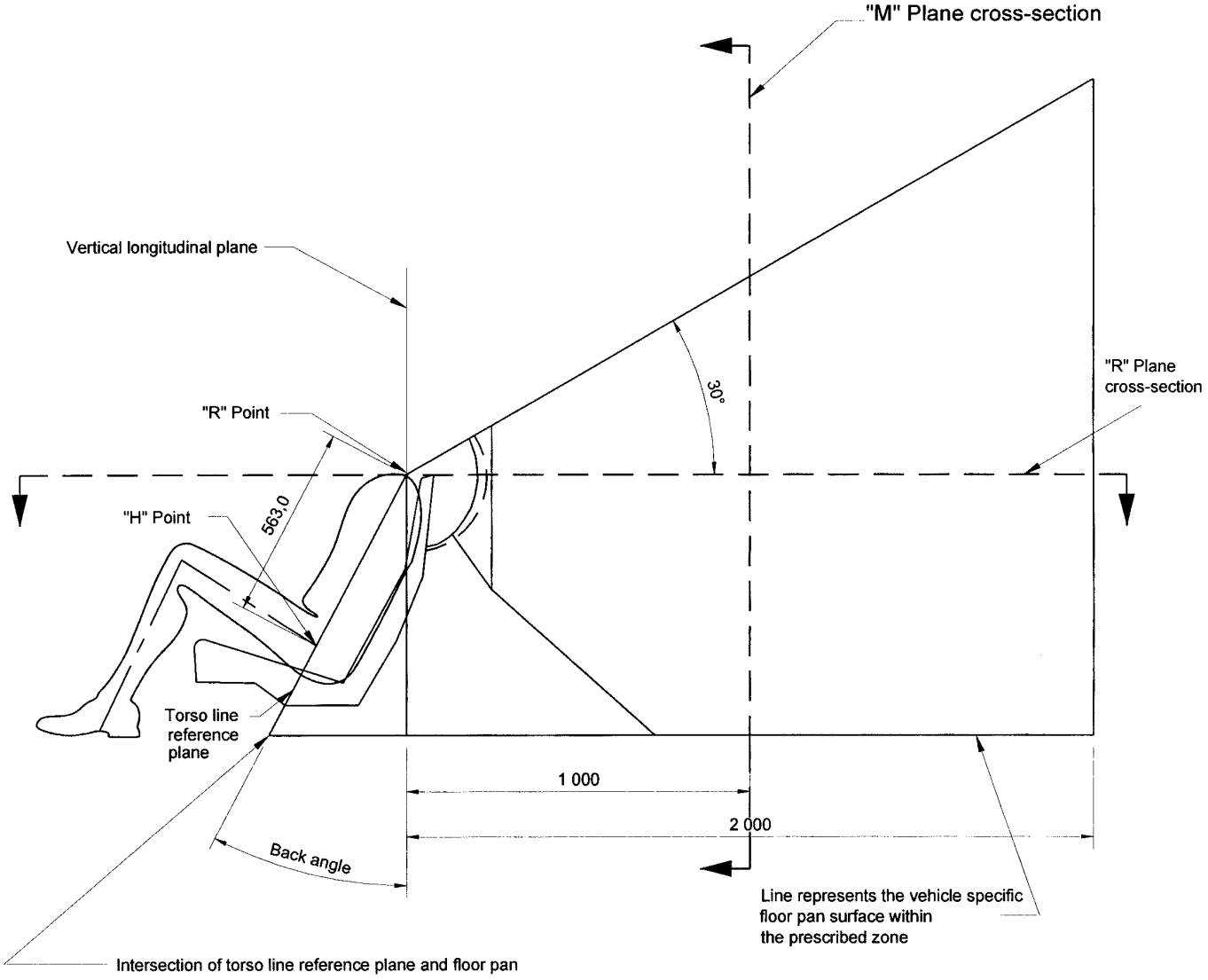

Notes

1. Dimensions in mm, except where otherwise indicated
2. Portion of user-ready tether anchorage that is designed to bind with the tether strap hook to be located within shaded zone
3. Drawing not to scale
4. "R" Point: Shoulder reference point
5. "M" Plane: M-reference plane, 1 000 mm horizontally back from "R" Point

Figure 8 -- Side View, User-ready Tether Anchorage Optional Location for Passenger Cars and Multipurpose Passenger Vehicles until September 1, 2004

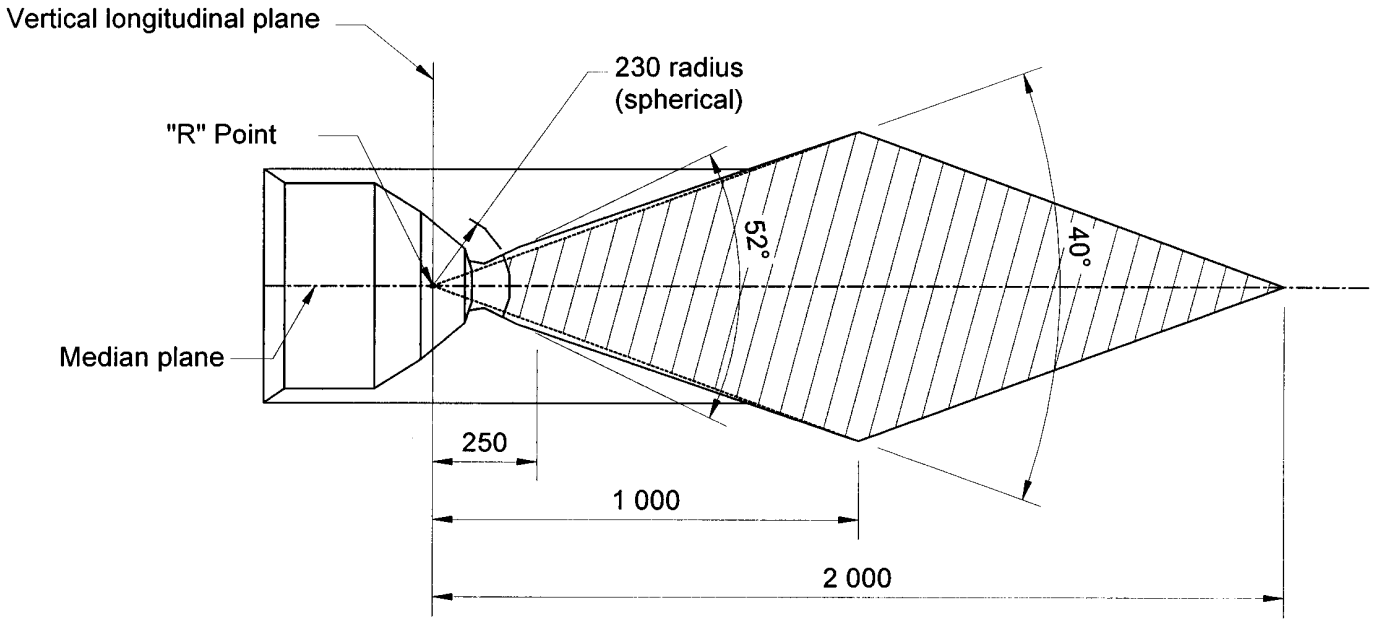

Notes

1. Dimensions in mm, except where otherwise indicated
2. Portion of user-ready tether anchorage that is designed to bind with the tether strap hook to be located within shaded zone
3. Drawing not to scale
4. "R" Point: Shoulder reference point

Figure 9 -- Plan View (R-point Level), User-ready Tether Anchorage Optional Location for Passenger Cars and Multipurpose Passenger Vehicles until September 1, 2004

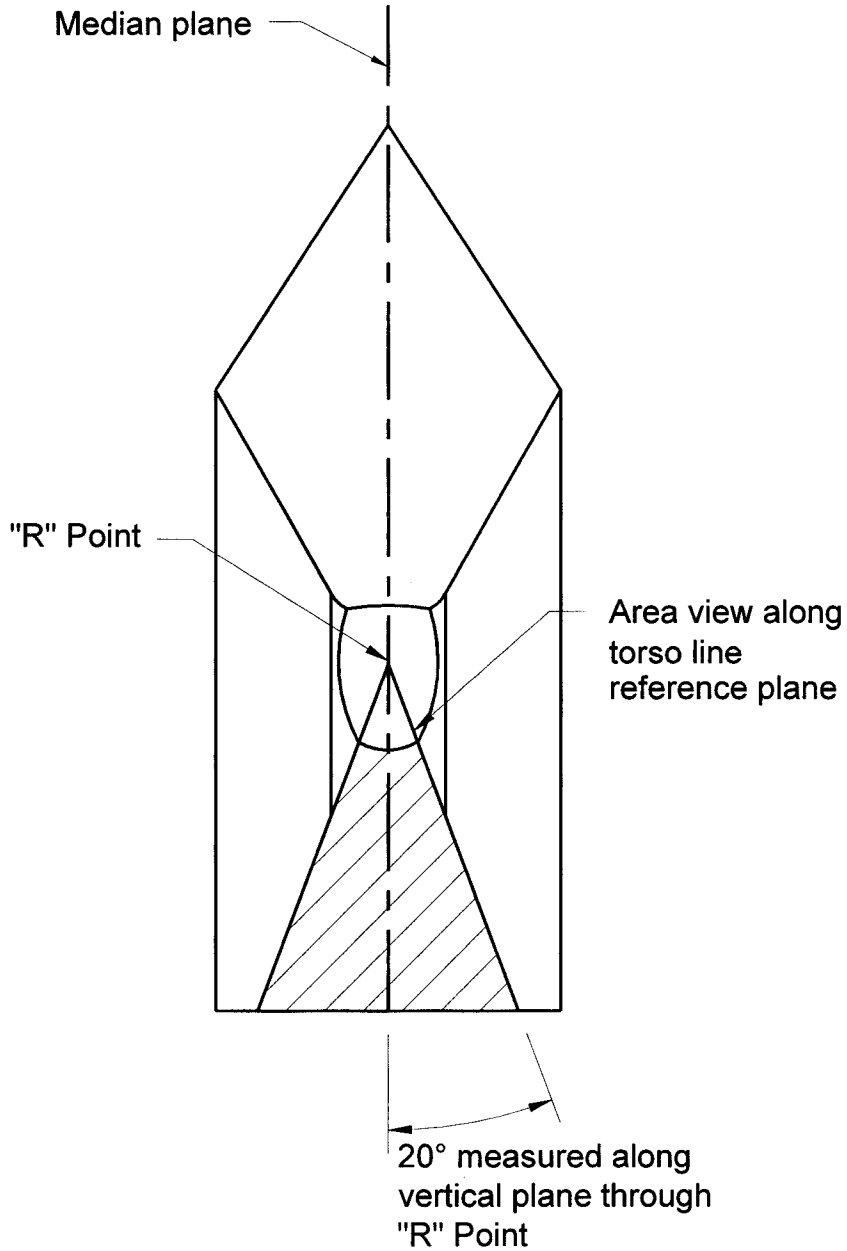

Notes

1. Portion of user-ready tether anchorage that is designed to bind with the tether strap hook to be located within shaded zone
2. Drawing not to scale
3. "R" Point: Shoulder reference point

Figure 10 -- Front View, User-ready Tether Anchorage Optional Location for Passenger Cars and Multipurpose Passenger Vehicles until September 1, 2004

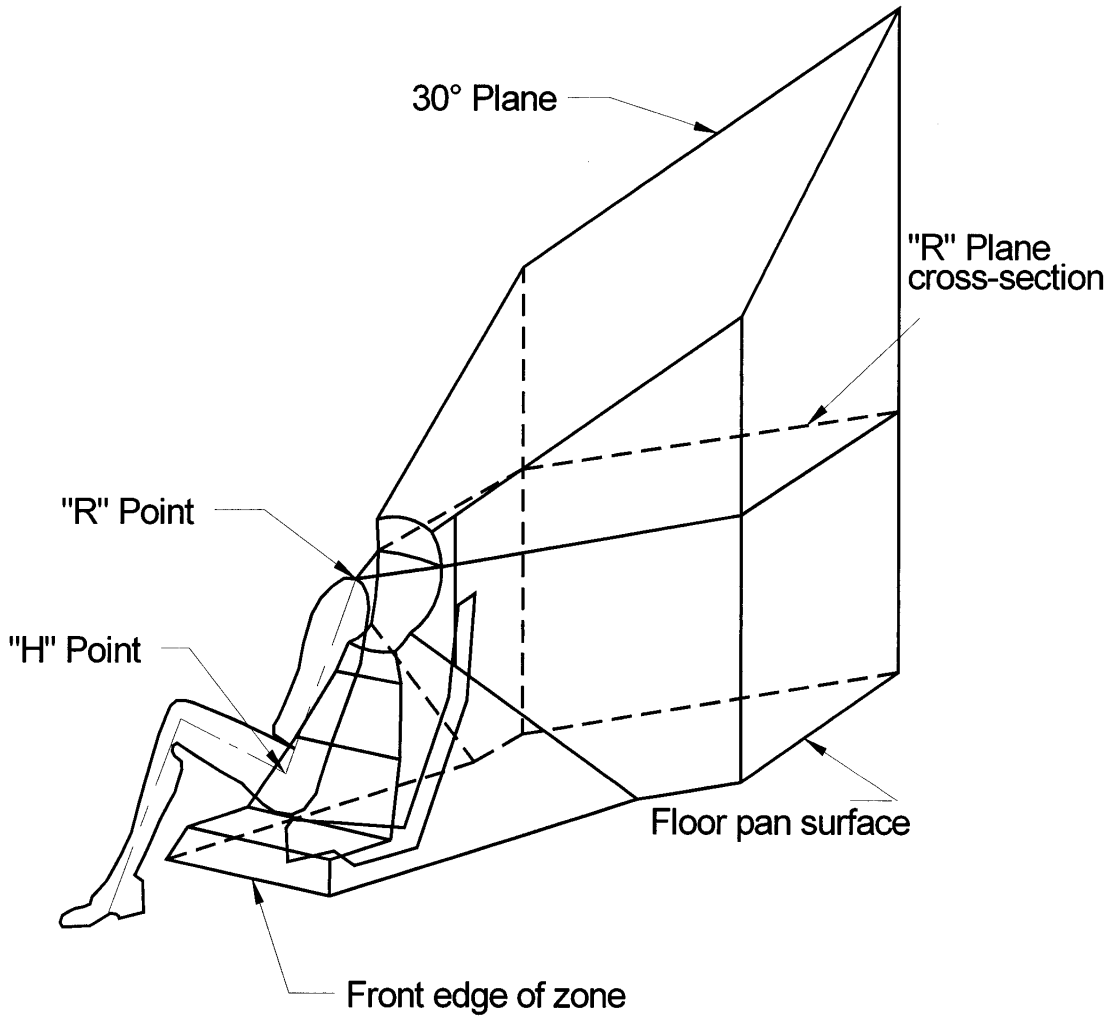

Notes

1. Portion of user-ready tether anchorage that is designed to bind with the tether strap hook to be located within shaded zone
2. Drawing not to scale
3. "R" Point: Shoulder reference point

Figure 11 -- Three-dimensional Schematic View of User-ready Tether Anchorage Optional Location for Passenger Cars and Multipurpose Passenger Vehicles until September 1, 2004

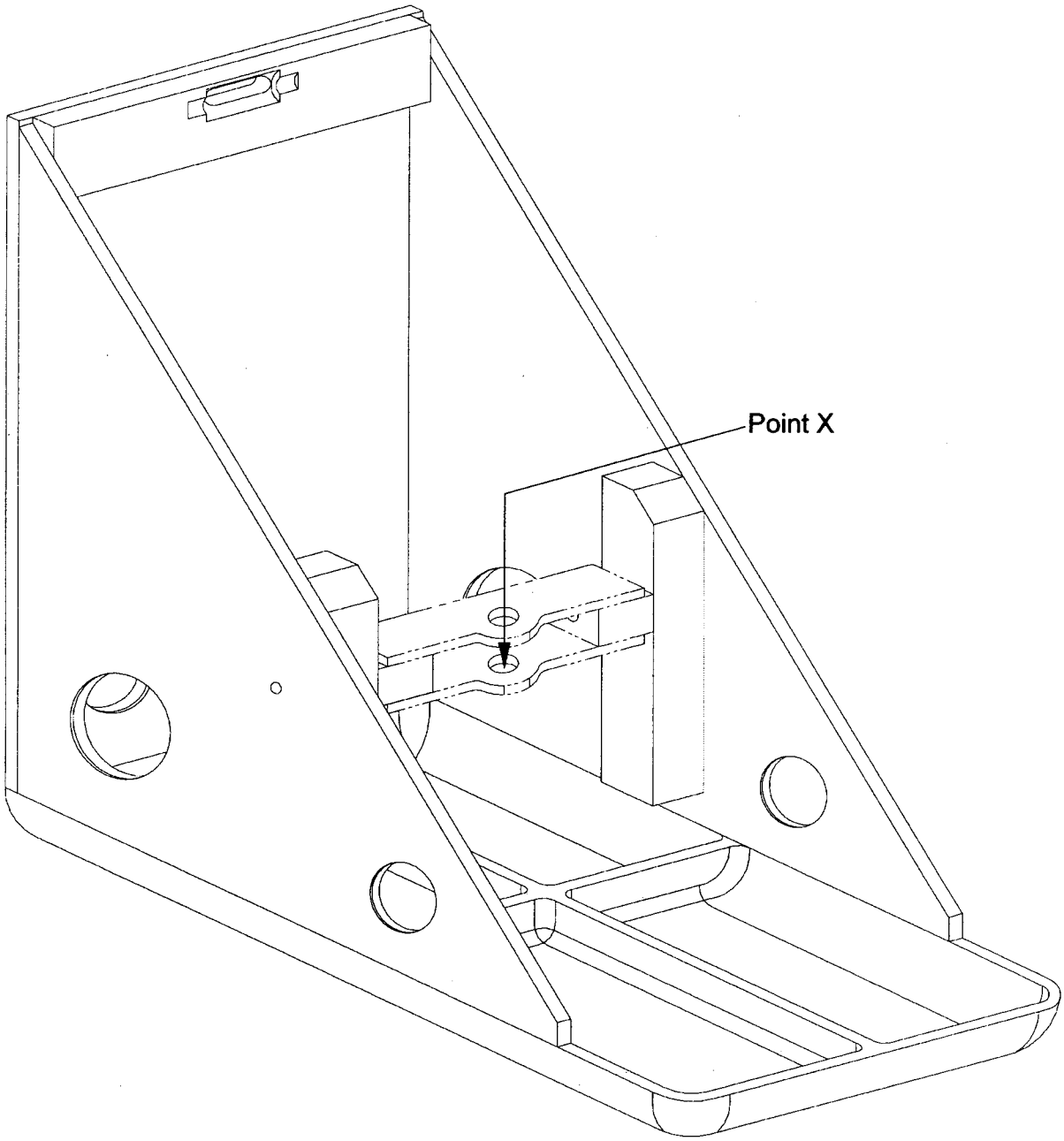

Figure 12 – Three Dimensional Schematic View of the Static Force Application Device 1 (SFAD 1)

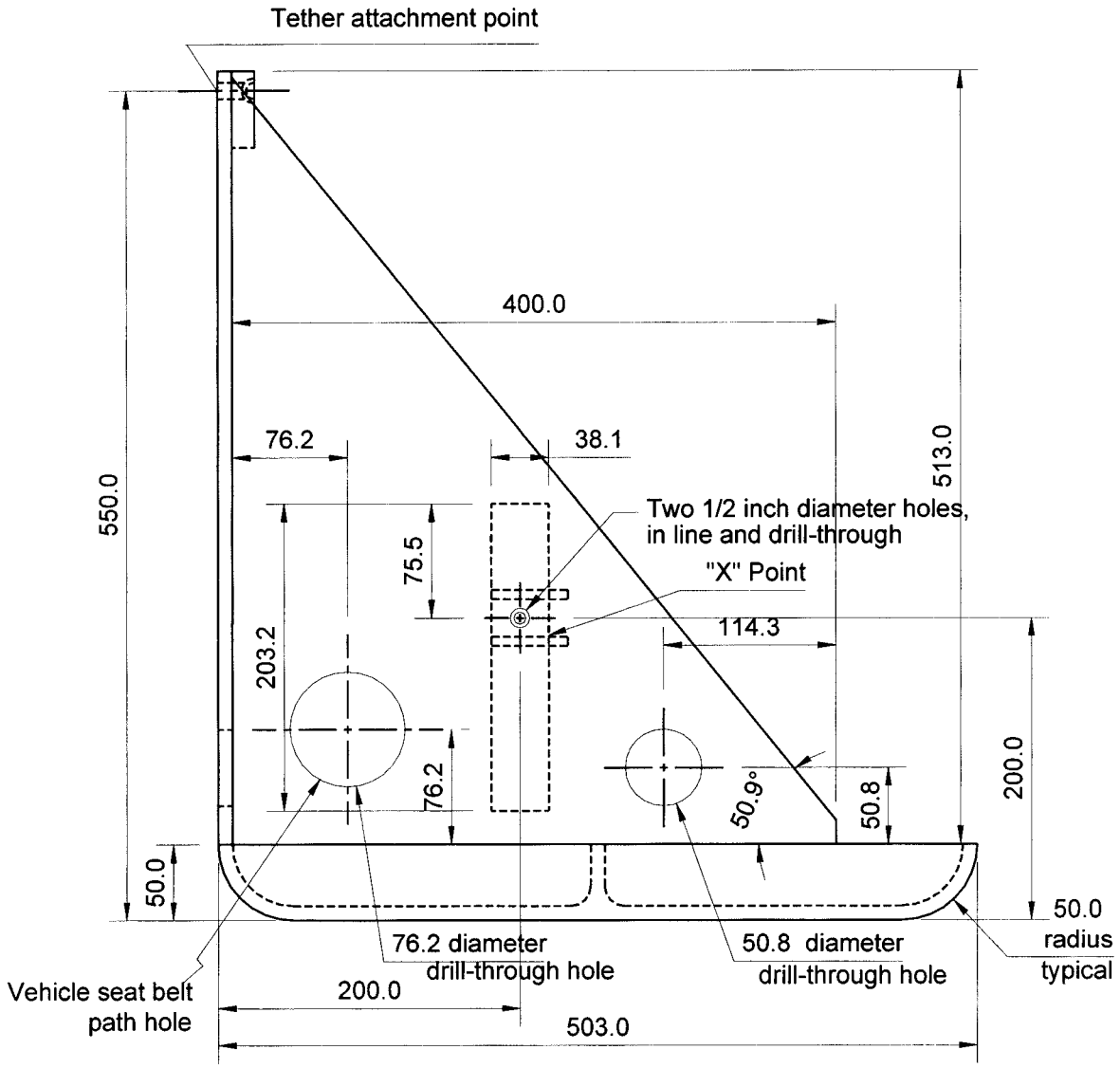

Notes

1. Material: 6061-T6-910 Aluminum
2. Dimensions in mm, except where otherwise indicated
3. Drawing not to scale
4. Break all outside corners

Figure 13 -- Side View, Static Force Application Device 1 (SFAD 1)

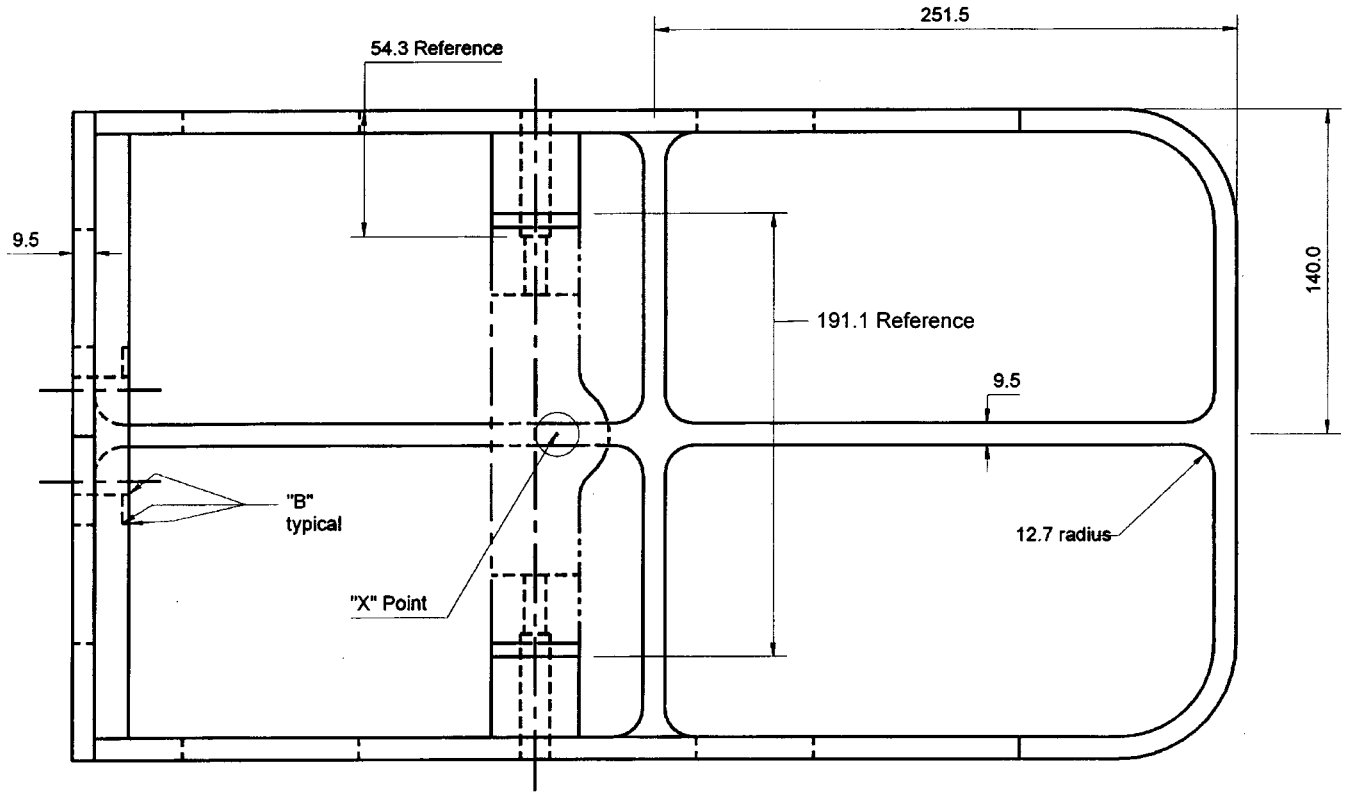

Notes

1. Material: 6061-T6-910 Aluminum
2. Dimensions in mm, except where otherwise indicated
3. Drawing not to scale
4. Break all outside corners and lightning hole edges 1.5 mm approximately.
5. Break edges of vehicle seat belt path holes at least 4 mm
6. "B" = approximately 0.8 mm

Figure 14 -- Plan View, Static Force Application Test Device 1 (SFAD 1)

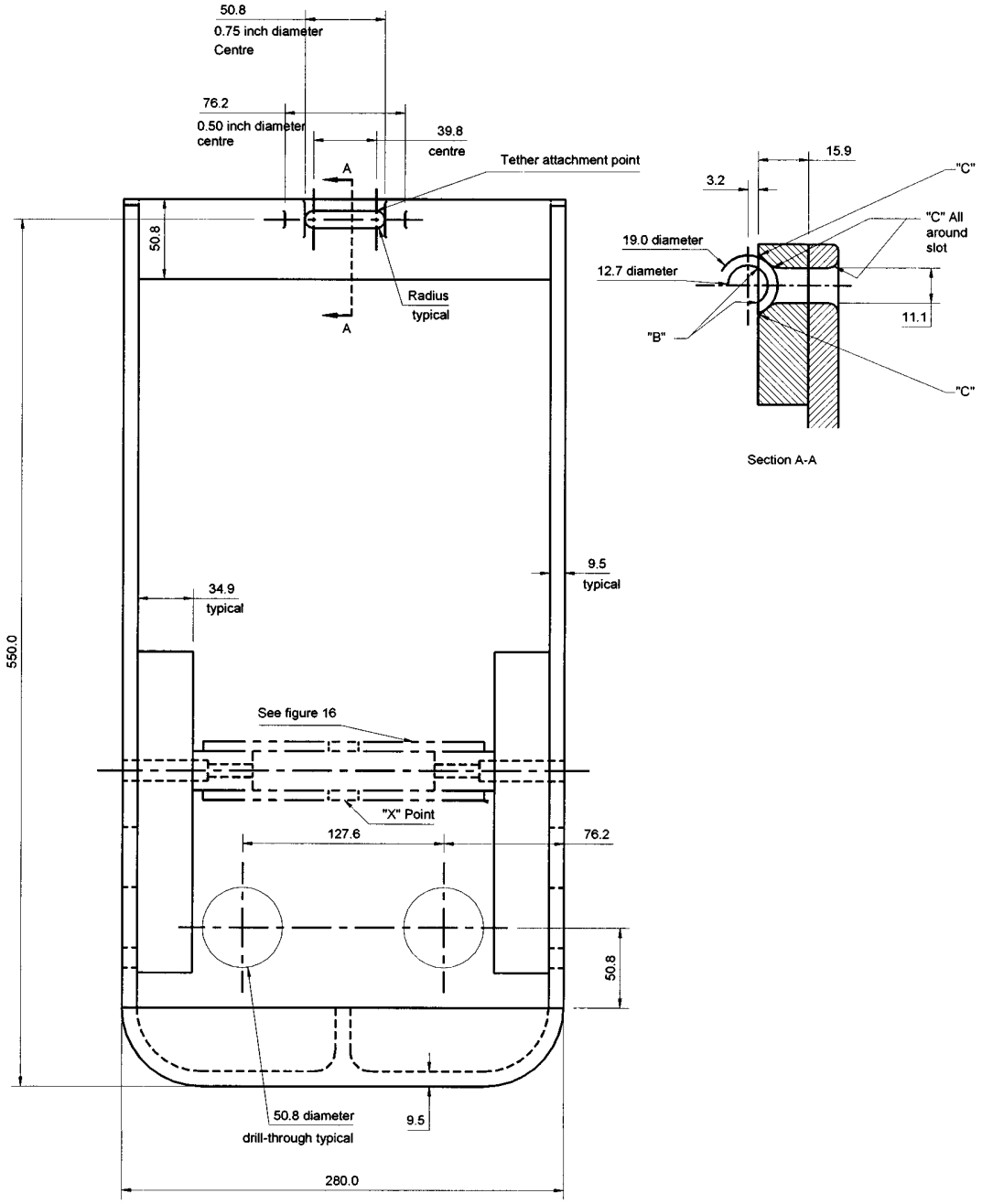

Notes

1. Material: 6061-T6-910 Aluminum
2. Dimensions in mm, except where otherwise indicated
3. Drawing not to scale
4. “B” = approximately 0.8 mm
5. “C” = approximately 3.2 mm

Figure 15 -- Front View, Static Force Application Device 1 (SFAD 1)

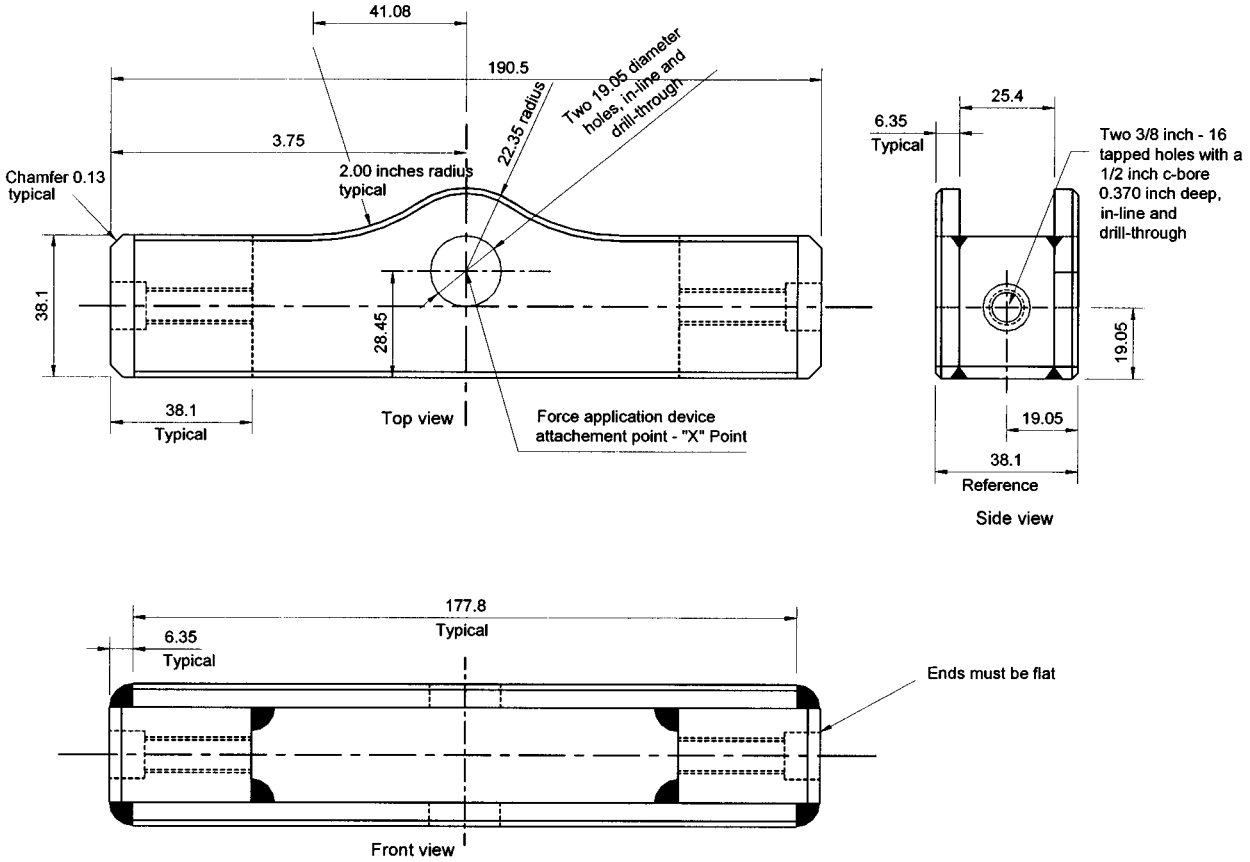

Notes

1. Material: Steel
2. Dimensions in mm, except where otherwise indicated
3. Drawing not to scale
4. Break all outside corners approximately 1.5 mm
5. Surfaces and edges are not to be machined unless otherwise specified for tolerance.
6. Saw-cut or stock size material whenever possible.
7. Construction to be securely welded.

Figure 16 -- Cross Bar, Static Force Application Device 1 (SFAD 1)

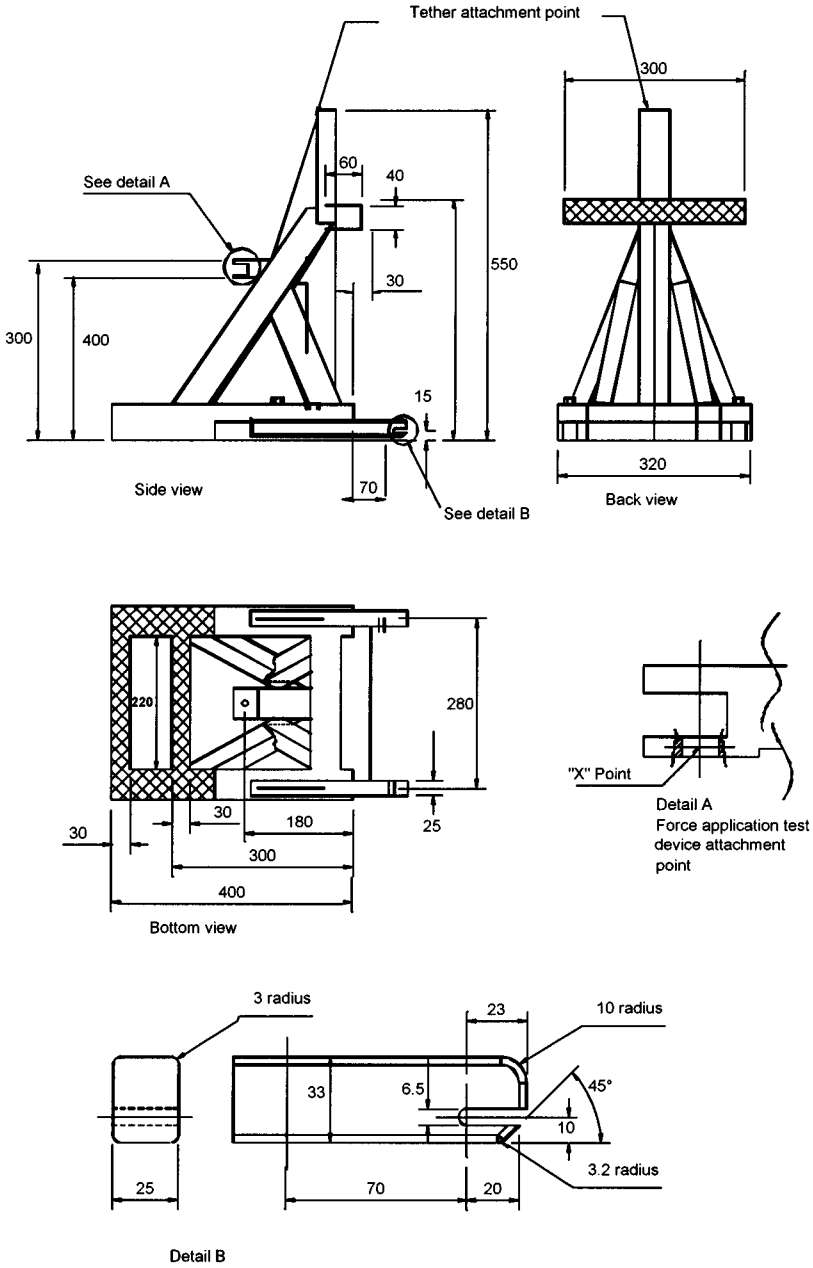

Notes

1. Material: steel, mild steel rectangular tubing 50 mm by 75 mm of 3 mm nominal thickness, with 6 mm thick force application test device attachment point plate.
2. Securely welded construction
3. Dimensions in mm, except where otherwise indicated
4. Drawing not to scale

Figure 17 -- Side, Back and Bottom Views, ISO 13216-1 Static Force Application Device 2 (SFAD 2)

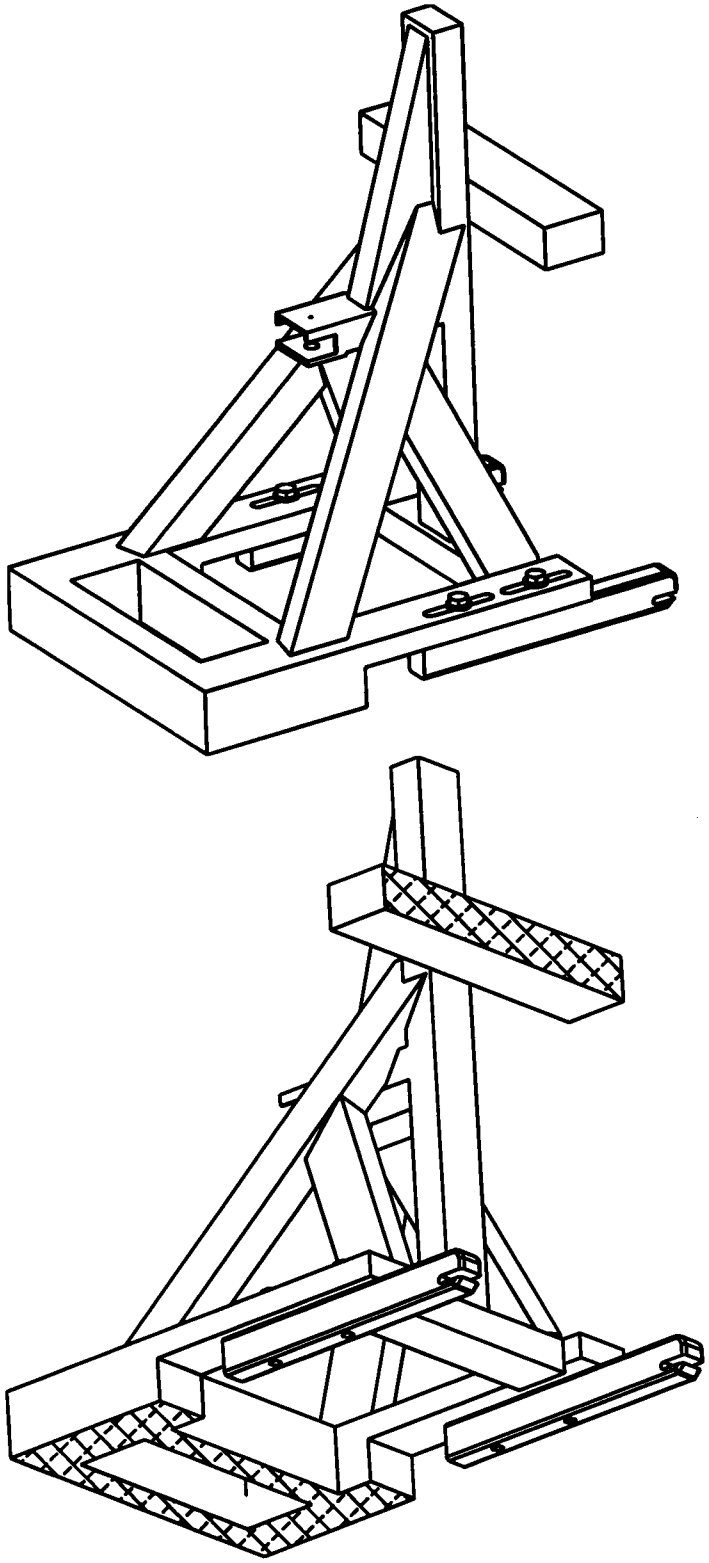

Figure 18 -- Three-dimensional Schematic Views of the ISO 13216-1 Static Force Application Device 2 (SFAD 2)

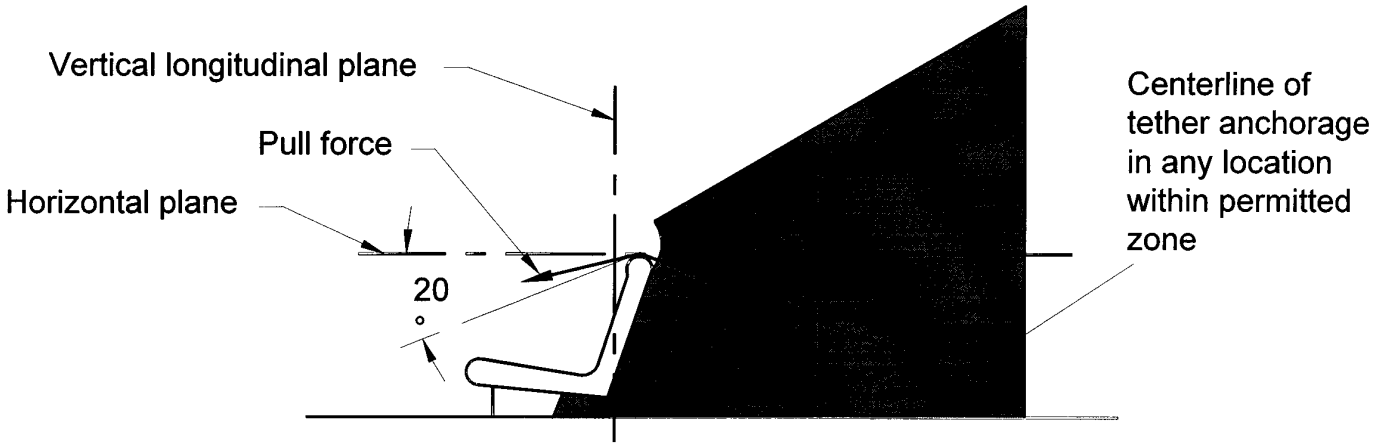

Figure 19 – Side View, Optional Tether Anchorage Test for Passenger Cars until September 1, 2004

BILLING CODE 4910–59–P

5. Part 596 is added to read as follows:

PART 596—CHILD RESTRAINT ANCHORAGE SYSTEM PHASE-IN REPORTING REQUIREMENTS

Sec.
596.1 Scope.
596.2 Purpose.
596.3 Applicability.
596.4 Definitions.
596.5 Response to inquiries.
596.6 Reporting requirements.
596.7 Records.
596.8 Petition to extend period to file report.

Authority: 49 U.S.C. 322, 30111, 30115, 30117, and 30166; delegation of authority at 49 CFR 1.50.

§ 596.1 Scope.

This part establishes requirements for manufacturers of passenger cars, and of trucks and multipurpose passenger vehicles with a gross vehicle weight rating (GVWR) of 3,855 kilograms (8,500 pounds) or less, and of buses with a GVWR of 4,536 kg (10,000 lb) or less, to submit a report, and maintain records related to the report, concerning the number of such vehicles that meet the requirements of Standard No. 225, *Child restraint anchorage systems* (49 CFR 571.225).

§ 596.2 Purpose.

The purpose of these reporting requirements is to assist the National Highway Traffic Safety Administration in determining whether a manufacturer has complied with Standard No. 225 (49 CFR 571.225).

§ 596.3 Applicability.

This part applies to manufacturers of passenger cars, and of trucks and multipurpose passenger vehicles with a gross vehicle weight rating (GVWR) of 3,855 kilograms (8,500 pounds) or less, and of buses with a GVWR of 4536 kg (10,000 lb) or less. However, this part does not apply to vehicles excluded by S5 of Standard No. 225 (49 CFR 571.225) from the requirements of that standard.

§ 596.4 Definitions.

(a) All terms defined in 49 U.S.C. 30102 are used in their statutory meaning.

(b) Bus, gross vehicle weight rating or GVWR, multipurpose passenger vehicle, passenger car, and truck are used as defined in 49 CFR 571.3.

(c) *Production year* means the 12-month period between September 1 of one year and August 31 of the following year, inclusive.

§ 596.5 Response to inquiries.

At anytime during the production years ending August 31, 2000, August 31, 2001, and August 31, 2002, each manufacturer shall, upon request from the Office of Vehicle Safety Compliance, provide information identifying the vehicles (by make, model and vehicle identification number) that have been certified as complying with Standard No. 225 (49 CFR 571.225). The manufacturer's designation of a vehicle as a certified vehicle is irrevocable.

§ 596.6 Reporting requirements.

(a) *General reporting requirements.* Within 60 days after the end of the production years ending August 31, 2000, August 31, 2001, and August 31, 2002, each manufacturer shall submit a report to the National Highway Traffic Safety Administration concerning its compliance with the child restraint anchorage system requirements of Standard No. 225 (49 CFR 571.225) for its passenger cars, trucks, buses, and multipurpose passenger vehicles produced in that year. Each report shall—

(1) Identify the manufacturer;

(2) State the full name, title, and address of the official responsible for preparing the report;

(3) Identify the production year being reported on;

(4) Contain a statement regarding whether or not the manufacturer complied with the child restraint anchorage system requirements of Standard No. 225 (49 CFR 571.225) for the period covered by the report and the basis for that statement;

(5) Provide the information specified in paragraph (b) of this section;

(6) Be written in the English language; and

(7) Be submitted to: Administrator, National Highway Traffic Safety Administration, 400 Seventh Street, S.W., Washington, DC 20590.

(b) *Report content.*

(1) *Basis for phase-in production goals.* Each manufacturer shall provide the number of passenger cars and trucks and multipurpose passenger vehicles with a gross vehicle weight rating (GVWR) of 3,855 kilograms (8,500 pounds) or less, and buses with a GVWR of 4,536 kg (10,000 lb) or less manufactured for sale in the United States for each of the three previous production years, or, at the manufacturer's option, for the current production year. A new manufacturer that has not previously manufactured these vehicles for sale in the United States shall report the number of such vehicles manufactured during the current production year.

(2) *Production.* Each manufacturer shall report for the production year for which the report is filed: the number of passenger cars and trucks and multipurpose passenger vehicles with a gross vehicle weight rating (GVWR) of 3,855 kilograms (8,500 pounds) or less, and buses with a GVWR of 4,536 kg (10,000 lb) or less, that meet Standard No. 225 (49 CFR 571.225).

(3) *Vehicles produced by more than one manufacturer.* Each manufacturer whose reporting of information is affected by one or more of the express written contracts permitted by S13.1.2(c) and S14.2.2 of Standard No. 225 (49 CFR 571.225) shall:

(i) Report the existence of each contract, including the names of all parties to the contract, and explain how the contract affects the report being submitted.

(ii) Report the actual number of vehicles covered by each contract.

§ 596.7 Records.

Each manufacturer shall maintain records of the Vehicle Identification Number for each vehicle for which information is reported under § 596.6(b)(2) until December 31, 2004.

§ 596.8 Petition to extend period to file report.

A manufacturer may petition for extension of time to submit a report under this Part. A petition will be granted only if the petitioner shows good cause for the extension and if the extension is consistent with the public interest. The petition must be received not later than 15 days before expiration of the time stated in § 596.6(a). The filing of a petition does not automatically extend the time for filing a report. The petition must be submitted to: Administrator, National Highway Traffic Safety Administration, 400 Seventh Street, S.W., Washington, D.C. 20590.

Note: The following appendices will not appear in the Code of Federal Regulations.

Appendix A—NHTSA's Evaluation of Cosco's Car Seat Only System

In the NPRM, the agency tentatively rejected Cosco's Car Seat Only (CSO) system as an alternative to the proposed child restraint anchorage system. Cosco opposed this in its comment.

Cosco believed that the flexible latchplate system, and by implication the rigid bar anchorage system, will increase costs and result in a significant increase in the number of infants and young children killed and injured. Cosco said it retained Dr. Larry M. Newman and Dr. Alan R. Winman to analyze price sensitivity for child restraints. They concluded that: (a) The retail price for car seats would increase from 28 to 110 percent; (b) the lower priced seats would suffer the biggest percentage increase, so those persons least able to purchase a new car seat would see the greatest proportionate increase in

price; (c) 10 percent of these low priced seats would not be purchased if prices increase as estimated with the flexible latchplate system, resulting in 283,000 fewer car seats in use annually and 122,000 fewer seats available through hospital and loaner programs, and thus in a total of 405,000 fewer children being restrained in car seats annually (which is estimated to be 6.6 percent of car seats sold through all channels of distribution in 1995); and (d) the 6.6 percent reduction in usage would result in 33 deaths and 33,000 serious injuries annually to children under age five. Cosco argued that child restraint purchasers are not willing to pay for a safety feature, and that State mandatory use laws will not ''encourage the use of new expensive car seats to a greater extent than they do today * * *.''

Cosco suggested that its CSO system is less costly than flexible latchplate system and can be implemented faster. It believed that the CSO belt is not likely to be misrouted on today's child restraints that have all-molded shells and only one labeled belt path. ''Misrouting is not cited as a significant misuse in clinic studies. It is a non-factor today and should not be considered as an issue.'' Cosco acknowledged that a belt adjuster would be needed for the CSO and suggested that a high tension automatic locking retractor (ALR) would eliminate concerns about the ability to cinch up the CSO belt. In addition, Cosco suggested that the CSO belt could be color coded, labeled, and otherwise distinguished from the adult passenger belt, to ensure that passengers would not mistakenly use the CSO belt for their own restraint.

In opposing the CSO system, Ford said that it agreed with most of the reasons that NHTSA provided in the NPRM explaining why the system did not appear satisfactory as a universal anchorage system. Ford also stated—

Our primary concern is that the CSO system may not provide the level of CRS crash performance available in current and future vehicles with lockable lap/shoulder belts. The CSO system would add substantial cost and weight to every vehicle, with a potential degradation in CRS safety. In addition, Cosco's claim that the CSO system could be installed quickly is inaccurate. If vehicle manufacturers were to install the CSO system without adding new, relocated anchorages for the CSO belts, the resulting CRS performance would not be as good as installation with current lap/shoulder belts. Acceptable installation of the CSO system would require new anchorages in most vehicles, and thus would take as much leadtime as any other CRS anchorage system.

NHTSA's Response to Cosco

NHTSA disagrees with Cosco's economic argument, and with Cosco's views about the advantages it perceives in the CSO system.

The agency agrees that, under normal economic conditions, an increase in prices may result, depending on the price elasticity of demand, in a decrease in quantity demanded. The classical way of estimating price elasticity of demand is to examine the change in sales volume when there is a price increase or decrease, but the product remains the same. However, as noted above, and further discussed in the FEA, the agency believes that the demand for child restraints is highly inelastic. This conclusion is supported by the fact that child restraints can be considered a necessity since their use is regulated in every State. Also, the information provided by Cosco to the Docket (Docket number 96–095–N03–050), see Cosco's Infant Car Seat by Price Segment, Table 2, indicates that price is not the only criterion affecting sales. If it were, then the lowest priced child restraints would have the highest sales volume. However, they do not. In fact, some of the higher priced child restraints have the higher sales volumes. Thus, consumers recognize different qualities in different models of child restraints. Some consumers are clearly willing to pay more for these perceived better qualities.

A child restraint equipped for an independent anchorage system is a safer product than conventional child restraints. When the safety aspects of such a child restraint are advertised, consumers will know that they are getting a better product. Based on clinical trials, consumers who tried these new child restraints indicated that they were willing to pay a higher price for these systems than the incremental cost estimates. The researchers in the Canadian study stated that the concern for significant reduction in child restraint use if advanced designs result in a small price increase was not supported in the study. The participants were willing to pay higher prices for systems that they perceive are better than today's child restraint systems. ''Usability Trials of Alternative ISOFIX Child Restraint Attachment Systems,'' (ICBC, 1996). Ford (035), Gerry Baby Products Company (039), Indiana Mills and Manufacturing Inc. (040), and Volvo (053), commenting to the docket on this issue, stated that child restraints were not price sensitive.

Finally, even if there were an adverse effect on the child restraint market, especially the low end of that market, NHTSA believes that the hospitals and loaner programs would be able to provide child restraints for persons who wanted them but chose not to buy one because of the price increase. From discussions with some of these entities (hospitals and loaner programs), the agency has found that they were eager to have the new seats because of their improved safety and also because of their greater ease of installation. Many of them believed that they would be able to obtain enough funds to purchase the new seats without any major change in the number of seats they are able to provide to the public. In addition, the American Academy of Pediatrics commented that it believes that loan programs will be able to gradually acquire child restraints with the newly designed attachment system.

NHTSA continues to believe that one of the CSO's main disadvantages is that it is essentially no different from the current lap belt means of attaching child restraints to vehicle seats. The agency remains concerned that the CSO system might not make attaching a child restraint significantly easier than it is today. In the agency's view, one limitation is that the CSO belt would have to be correctly routed through the child restraint. In the NPRM, NHTSA said that manufacturers believe many consumers find current routing difficult to achieve. (In the October 1996 public workshop, Dave Campbell of Century and Klaus Werkmeister of BMW, among others, referred to routing issues.)

The agency disagrees with Cosco's argument that proper routing of belts is not an issue today in installing child restraints. In the report ''Patterns of Misuse of Child Safety Seats,'' above, the researchers found a 6 percent rate of misuse of child restraints in use today due to misrouted seat belts with infant, convertible and booster seats. The consequences resulting from this particular type of misuse are more disastrous than those from other misuses that may occur more frequently, such as the incorrect use of a locking clip. Canada found in the clinic described in the NPRM (62 FR at 7864) on the usability of various attachment systems that, while the flexible latchplate and rigid bar anchorage system child restraints were attached to the proper vehicle anchorages by every participant, the lap belt system was secured by only 63 (82.9 percent) participants. ''Of the 13 participants who failed to secure the child restraint in this manner, 5 gave up, one failed to engage the buckle and one participant routed the seat belt through multiple ports. The remaining 6 participants routed the lap belt [for the forward-facing seat] through the rear-facing slots.'' (ICBC, 1996).

In addition, as explained in the NPRM, consumer clinics have uniformly found that people highly dislike the conventional means of attaching child restraints by way of the vehicle's belts. In the Canadian study, participants rated the ease of installation for different systems on a five point scale (1=very difficult to 5=very easy). Participants at the end of the trials showed no strong preference between the ISOFIX (rated 4.3), CANFIX (4.6), UCRA (4.4) and ISO (4.1) systems. ''The conventional [lap belt] system, however, was the last choice of the majority of participants and was rated poorly in terms of ease of installation [3.1] and perceived safety.'' As noted above, the Canadian study reports that participants were willing to pay higher prices for systems that they perceive are better than the lap belt system. Because the CSO system is basically a lap belt system, the agency believes the findings made in these studies are applicable to the CSO as well.

The NPRM indicated that the CSO system may be difficult to tighten because photographs of the belt showed the retractor in a place that may make it difficult for consumers to reach or tighten the belt. The Canadian study found that the lap belt system had the worst rate of proper installation, i.e., use of correct attachment points and seat belt routing with no more than a given amount of forward excursion of the top and lower part of the child restraint. Recognizing the difficulty of cinching the CSO belt as initially presented in its petition, and the importance of a tight fit, Cosco commented that a high-tension ALR retractor could be installed on the belt, to the rear of the seat bight, at a cost that would be ''not that much greater than the proposed UCRA.''

(Cosco did not provide a specific cost estimate.) Even without the ALR, however, Ford opposed the CSO system, believing that the CSO system would add substantial cost and weight to every vehicle, with a potential degradation in CRS safety. Ford believed the CSO does not provide as many safety benefits as a lap/shoulder belt system because it believed that the shoulder portion of the Type II system, routed through the back of the child restraint, would restrain the top of a child restraint similar to the effect of a tether. Further, apparently the advantage that Cosco claimed in terms of leadtime is incorrect. Ford stated that the CSO system would take as long to install in vehicles as any other attachment system. With regard to the comment of Hartley Associates that the CSO had an advantage in post-crash situations because emergency personnel need only release one attachment point versus more than one point, NHTSA has no information indicating that extrication by emergency personnel is a problem area in need of attention at this time.

The agency disagrees that the risk of misuse would be sufficiently addressed by, as suggested by Cosco, having the CSO colored orange, having ''Car Seat Use Only'' woven or imprinted into it, and having the high tension ALR retractor a part of it. NHTSA is especially concerned about children who may be buckled in a belt-positioning booster seat using the CSO belt or who may be buckled into the CSO by itself on the vehicle seat. If a child is buckling him or herself, the risk that confusion or unintended misuse will occur is even greater. The safety consequences of a child wearing only a lap belt is greater than that of an adult using a lap belt. When a lap belt is used to restrain a child restraint, NHTSA has observed that the angle formed by the belt from the perpendicular is about 20 degrees. Given Cosco's assumption that the CSO belt would be used to restrain a child restraint in the same manner that a lap belt is now used, NHTSA assumes that the angle that would be formed by the CSO belt would be about 20 degrees also. Twenty degrees is much too shallow an angle for the lap belt to be safely positioned in a crash, on the occupant's pelvis, where the bones are hard and well formed and better able to withstand crash forces compared to the soft, vulnerable organs and tissues of the abdominal area. Even if the belt were to be placed on the child's pelvis, there could be safety problems in a crash. A child's pelvis not as well formed as an adult's, and a belt has a tendency to slide over the pelvis (unencumbered by bony ''hooks'' that are formed on the adult pelvis) onto the abdominal area. Also, children tend to slouch on the vehicle seat so that they can ride comfortably. They do this because when they sit upright, their legs are too short to enable them place their knees at the front edge of the seat cushion. Slouching increases the likelihood of the child's lower body sliding forward (submarining) in a crash, which would further relocate the lap belt upward on the child's abdomen. Further, because the CSO belt is narrower than a lap belt provided for occupant protection, the narrower width concentrates belt loads on the abdomen to a greater degree than a seat belt.

For the reasons stated above, the agency believes the CSO system is not a viable child restraint anchorage system. Action on Cosco's petition is hereby withdrawn (terminated).

Appendix B—NHTSA's Evaluation of AAMA/AIAM Clinic Results

AAMA and AIAM asked MORPACE International, Inc., to conduct a clinic comparing consumer likes and dislikes involving the flexible latchplate and rigid bar anchorage systems. The clinic was held April 15–20, 1998, in Novi, Michigan. Two hundred fifty-four (254) individuals were asked to evaluate seven child restraint ''systems'' with respect to installation, operation and security. All seven systems consisted of the same model of Century child restraint, each with a different attachment system. These clinic participants indicated their first, second and last choice of restraint system, before and after being informed of the prices of the systems. A subsample (less than 10 percent) also participated in ''exit interviews'' to help provide insight into their responses.

When presented with the seven systems to choose from, 39 percent of the participants preferred the Strap Based Buckle Connector (M) system (UCRA system). The participants were offered only one buckle system to choose from, but were offered three choices of the rigid bar anchorage system (Strap-Based Snap Hook Connector [R], Bracket-Based Connector [L], and Strap-Based Connector [S]). A complementary system to M, the Bracket-Based Latchplate Buckle Connector (P) system, was universally not preferred by participants. System P consisted of a buckle holder on the vehicle seat that rigidly-mounted latchplates on the child restraint system insert into.

The agency believes that the study does not offer anything conclusive about preferences for the options, other than system P was universally not a first choice. While participants gave higher preference to the flexible latchplate anchorage system in the clinic, NHTSA cannot conclude that the results support either a flexible latchplate or a rigid bar anchorage system.

Sample of Participants Not Intended To Be Representative of U.S. Population

Results are based on a purposively selected focus group. The document does not indicate how the 254 individuals were selected to participate in the clinic, other than to say that they were ''recruited.'' This recruiting apparently was quota driven as it appears that it strived to obtain certain demographics. Summary information about the group was provided in the supporting ''Data Tabulations.'' All but three participants indicated that they had at least one seat in their household. Vehicle ownership was split 54 percent automobiles to 46 percent ''trucks.'' Females and males were similar in number. ''Empty nesters,'' which we assume to mean care givers without their own children in residence, represented 24 percent of those recruited. The remaining sample was split almost evenly between those under a ''median age'' and those at or above that age. Forty-two percent were college graduates.

NHTSA is not able to determine how closely (or not) the characteristics of the people included in this focus group correspond to those of the population that would be most likely to purchase child safety seats. It appears that those included in this focus group were selected to match certain quota in order to produce a balance. As such, this focus group is not a probability based sample and cannot be assumed to be. Its results cannot be generalized to represent all potential purchasers. Any regional bias is not accounted for; we assume all participants were from Michigan. Because it is not a statistical sample, it is not possible to say that there is any statistical difference between the responses as they relate to any population of interest. Responses are representative of the focus group only.

Confounding Factors—Systems Presented Were Not Representative of Systems as They Are Likely To Be Produced

The flexible latchplate system used in the clinic is different from the one in the NPRM. It is not a pure flexible webbing system as described by GM. The flat latchplate was imbedded in a material that was semi-rigidly attached to a structure in the seat bight. This anchorage system was practically fixed, i.e., did not allow its being pushed in the direction of the seat bight. This feature simulates the property of rigidity of the 6 mm fixed bar. Further, the child restraint systems for the flexible latchplate system, and other child restraint systems using connectors that were attached to the child restraint by webbing material, were not reinforced the way that a child restraint would have to be to meet Standard 213's dynamic test requirements. Thus, the flexible latchplate child restraints, and others, had an unrealistic weight advantage compared to other child restraints.

Moreover, the rigid bar anchorage systems (R, L and S) were not optimized. In fact, they were penalized by being heavier than they would likely be if actually put into production. A child restraint manufacturer could compensate for the heavy base mechanism used to attach the rigid connectors to the Century child restraint by reducing the weight of the child restraint. Since no effort was made to take advantage of opportunities for compensatory weight reduction, the child restraint equipped with rigid connectors designed to be attached to rigid vehicle anchorages was unrealistically bulky and heavy. A more realistic comparison would have been to use a Britax child restraint system for the rigid bar anchorage option. The child restraint that Britax has designed weighs 17 lb. Britax optimizes the weight of its child restraint by removing bulk and weight to compensate for the weight of the base. (NHTSA understands that European manufacturers are currently developing child restraints with rigid attachment for the rigid bar anchorage system that will weigh even less than the current Britax restraint system.) Also, the Century child restraint used in the clinic was reported at the clinic as being priced approximately the same as a Britax seat would be, even though the Century seat did not have many of the features of a Britax seat that

participants might have thought would make the restraint ''worth the cost.''

The Preferences for a Rigid Bar System in the Vehicle Cannot Be Added Together

A number of parties commenting on the results of the clinic stated that NHTSA should add the proportions of participants who expressed preferences for three different child restraint attachment systems designed to be used with rigid 6 mm round bars. This, these commenters believed, would show that more participants preferred a round bar system over the flexible latchplate system. Chrysler disagreed that the proportions could be added, but still believed that the rigid bar anchorage system is superior to the flexible latchplate system. Ford said that it may not be statistically valid to add the preferences expressed for the round bar system, but believes ''it is directionally right'' to do so.

NHTSA does not believe that the proportions can be added. It is not known how much a participant's choice was based on a preference for the connecting mechanism. Thus, it cannot be assumed that if they had been offered only the flexible latchplate system and only one of the rigid bar system variants, participants would have chosen in the same proportion (39/48).

Preference for UCRA System Could Be Influenced by a Familiarity With the Hardware; Familiarity Should Not Be a Factor Because It Can Be Compensated for Simply by Time

The higher scores for Overall Suitability and Value For Money for the flexible latchplate system (System M) reflects that fewer participants gave system M low scores in these areas than for the other systems. Scores were closer for specific questions, although system M consistently scored highest or next highest. These preferences and low scores may reflect familiarity with something similar to existing systems (buckle-based systems) or unfamiliarity with a new system (latching on to a bar). The effect of cost on the evaluations is interesting, too. Despite similar costs for systems M, R and S, knowledge of system costs affected preferences disproportionately.

Issued on February 23, 1999.

Ricardo Martinez,

Administrator.

[FR Doc. 99–5053 Filed 3–1–99; 9:16 am]

BILLING CODE 4910–59–P

federal register

Friday
March 5, 1999

Part IV

Department of Commerce

Bureau of Export Administration

15 CFR Part 774

Revisions and Clarifications to the Export Administration Regulations; Commerce Control List; Final Rule

DEPARTMENT OF COMMERCE

Bureau of Export Administration

15 CFR Part 774

RIN: 0694–AB77

[Docket No. 981229330–8330–01]

Revisions and Clarifications to the Export Administration Regulations; Commerce Control List

AGENCY: Bureau of Export Administration, Commerce.

ACTION: Final rule.

SUMMARY: On January 15, 1998, the Bureau of Export Administration (BXA) published an interim rule (63 FR 2452) that implemented the Wassenaar Arrangement list of dual-use items and reporting requirements under the Wassenaar Arrangement. The interim rule revised the Commerce Control List by making revisions to implement the Wassenaar Arrangement. This rule amends Commerce Control List by making certain revisions and clarifications and, in some cases, inserts material inadvertently omitted from the January 15 interim rule.

DATES: This rule is effective March 5, 1999.

FOR FURTHER INFORMATION CONTACT: Patricia Muldonian, Office of Exporter Services, Bureau of Export Administration, Telephone: (202) 482–2440.

SUPPLEMENTARY INFORMATION:

Background

Specifically this rule makes the following revisions to part 774 of the Export Administration Regulations:

(1) ECCN 0A982 is amended by revising the entry heading and the License Requirements section by removing the references to ''conventional steel military helmets''. Conventional steel helmets are controlled under ECCN 0A018 or 0A988. In addition, this entry is also revised by removing the UN controls. The UN controls apply only to machetes and certain conventional steel helmets as described in ECCN 0A988.

(2) ECCN 0D001 is amended by revising the Related Controls section by removing the first reference to ECCN 0A002. Items controlled by ECCN 0A002 are subject to the export licensing authority of the U.S. Department of State, Office of Defense Trade Controls, not the Nuclear Regulatory Commission.

(3) ECCN 0E001 is amended by revising the Related Controls section by adding the phrase ''Technology for items controlled by 0A002 are subject to the export licensing authority of the U.S. Department of State, Office of Defense Trade Controls (see 22 CFR part 121).''

(4) ECCN 1A002 is amended by revising the Related Controls section by adding the phrase ''Composite structures that are specially designed for missile application (including specially designed subsystems and components) are controlled by ECCN 9A110''.

(5) ECCN 1A005 is amended by revising the Controls and Country Chart sections by revising the item for UN to read ''UN applies to entire entry—Rwanda and the Federal Republic of Yugoslavia (Serbia and Montenegro)''. In addition, License Exception GBS is revised to read ''Yes, except UN''.

(6) ECCN 1C001 is amended by revising the List of Items Controlled section by revising note 2 to 1C001.a, as follows: ''N.B.: Nothing in this note releases magnetic materials to provide absorption when contained in paint.''. This revision is consistent with revisions agreed to and implemented by the Wassenaar Arrangement in December 1997.

(7) ECCN 1C006 is amended by revising License Exceptions GBS and CIV as follows: ''GBS: Yes for 1C006.d; CIV: Yes for 1C006.d''

(8) [Reserved]

(9) ECCN 1D390 is amended by revising the Controls section by revising the phrase ''CB applies to entire entry NP Column 2'' to read ''CB applies to entire entry CB Column 2''.

(10) ECCNs 1D993, 1E001, and 1E994 are amended by revising the entry heading to remove the reference to ECCN 1C994. The January 15 rule moved fluorocarbon electronic cooling fluids from ECCN 1C994 to ECCN 1C006.d.

(11) ECCNs 1E001, 4D001, 4E001, 5D001, 5E001, 6D001, 6D003, 6E001, 6E002, 8D001 and 8E001 are amended by revising License Exception TSR for clarity purposes. In addition, the January 15 rule omitted Japan from the countries eligible for License Exception TSR. This rule corrects that omission.

(12) ECCN 2B001 ia amended by revising the List of Items Controlled section by removing the reference to ''(overall positioning)'' from 2B001.a.1. This revision is consistent with revisions agreed to and implemented by the Wassenaar Arrangement in December 1997.

(13) ECCN 2B003 is amended by revising the entry heading. The reference to ''controls'' is revised to read ''controllers''. This revision is consistent with revisions agreed to and implemented by the Wassenaar Arrangement in December 1997.

(14) ECCN 2B004 is amended by revising the entry heading by revising the phrase ''components, accessories,'' to read ''components, controllers, accessories,''.

(15) ECCN 2B005 is amended, as follows:

a. By revising the entry heading by adding the phrase ''as follows,'' after the phrase ''surface modifications,'';

b. By revising the related controls section by adding two notes as follows: ''(1) Vapor deposition equipment designed or modified for the production of filamentary materials are controlled by ECCN 1B101; (2) Chemical Vapor Deposition furnaces designed or modified for densification of carbon-carbon composites are controlled by ECCN 2B104.''; and

c. By revising the List of Items Controlled section by revising the reference to ''decomposition'' to read ''deposition'', as it appears in paragraph a.1.b;

The revisions described in item (15)a and c are consistent with revisions agreed to and implemented by the Wassenaar Arrangement in December 1997. The revision to item (15) b are consistent with revisions agreed to and implemented by the Missile Technology Control Regime.

(16) ECCN 2B104 is amended by revising the License Requirements section by removing the Nuclear Proliferation controls from this entry. Nuclear proliferation controls for isostatic presses are controlled under ECCNs 2B004 or 2B204. This revision is consistent with revisions agreed to and implemented by the Wassenaar Arrangement in December 1997.

(17) ECCN 2B996 is amended by revising the List of Items Controlled section by removing and reserving paragraph b (systems for simultaneous linear-angular inspection of hemishells). These systems are currently controlled under ECCN 2B206.b.

(18) ECCN 2E003 is amended:

a. By revising the related controls section by adding the following note: 'Technology', not controlled by ECCNs 2E001 and 2E002, for spin forming machines combining the functions of spin forming and flow forming, and flow forming machines controlled by ECCNs 2B009 and 2B109, are controlled by ECCN 2E101. This revision is consistent with revisions agreed to and implemented by the Missile Technology Control Regime.

b. By revising the List of Items Controlled section by revising the quotation marks in 2E003.e, as follows: 'Technology' for the 'development' * * *.''. This revision is consistent with revisions agreed to and implemented by the Wassenaar Arrangement in December 1997.

(19) ECCN 3A001 is amended by revising the List of Items Controlled section as follows:

(a) By revising the Related Definitions section, as follows: ''For the purposes of integrated circuits in 3A001.a.1, 5×10^3 Gy(Si) = 5×10^5 Rads (Si); 5×10^6 Gy (Si)/s = 5×10^8 Rads (Si)/s.''; and

(b) By revising 3A001.a.12.b to correct a typographic error.

(20) ECCN 3A002 is amended by revising the List of Items Controlled section by revising the reference to ''CCIR'' to read ''ITU'', in the note to 3A002.a.2.

(21) ECCN 3B001 is amended by revising License Exception GBS to read as follows: ''Yes, except 3B001.a.2 (metal organic chemical vapor deposition reactors), a.3 (molecular beam epitaxial growth equipment using gas sources), e (automatic loading multi-chamber central wafer handling systems *only* if connected to equipment controlled by 3B001.a.2, a.3, and f), and f (lithography equipment).''

(22) ECCN 3C002 is amended by revising License Exceptions GBS and CIV to read as follows: ''GBS: Yes for positive resists not optimized for photolithography at a wavelength of less than 365 nm, provided that they are not controlled by 3C002.b through .d.

CIV: Yes for positive resists not optimized for photolithography at a wavelength of less than 365 nm, provided that they are not controlled by 3C002.b through .d.''

(23) ECCN 4A003 is amended as follows:

(a) By revising the entry heading by adding the phrase ''(see List of Items Controlled)'' after the phrase ''equipment therefor,'';

(b) By revising the ''License Exception Notes'' by adding citation references for reporting obligations for computer exports under NDAA;

(c) By revising License Exception CIV by revising ''that'' to read ''than''; and

(d) By revising the List of Items Controlled section, as follows:

(1) By revising the reference to ''4E'' to read ''4E001'', in Note 2.c;

(2) By revising the phrase ''use of'' to read ''using'', in note 3 to 4A003.a; and

(3) By revising the phrase ''to be capable of'' to read ''for'', in 4A003.c.

The revisions to the List of Items Controlled section are consistent with revisions agreed to and implemented by the Wassenaar Arrangement in December 1997.

(24) ECCN 5A991 is amended by revising the List of Items Controlled section by removing 5A991.b.6.a (voice coding rates at less than 2,400 bits/s). This item is currently controlled under ECCN 5A001.b.10.

(25) ECCN 5A992 is amended by revising the entry heading, License Requirements and List of Items Controlled section. Specifically, this revision provides clarification that telecommunications equipment that contain encryption is controlled by this entry and that such equipment requires a license to countries identified by AT Column 1. In addition, this entry corrects an inadvertent error of the January 15 rule. ''Information security'' equipment, n.e.s., (e.g., cryptographic, cryptoanalytic,and cryptologic equipment, n.e.s,) and components therefor has been revised to require a license to countries identified by AT Column 2.

(26) ECCN 5D002 is amended by revising the Related Definitions section by adding the following definition, ''5D002.a controls ''software'' designed or modified to use ''cryptography'' employing digital or analog techniques to ensure ''information security''.'' This definition was erroneously omitted in the January 15 rule.

(27) ECCN 5D992 is amended by revising the License Requirements and List of Items Controlled sections. Specifically this rule clarifies that ''software'' specially designed or modified for the ''development'', ''production'', or ''use'' of telecommunications equipment containing encryption (e.g., equipment controlled by 5A992.a) or ''software'' having the characteristics, or performing or simulating the functions of equipment controlled by 5A992.a require a license to countries identified by AT Column 1. In addition, this entry corrects an inadvertent error of the January 15 rule. ''Software'' specially designed or modified for the ''development'', ''production'', or ''use'' of information security or cryptologic equipment (e.g., equipment controlled by 5A992.b); ''software'' having the characteristics, or performing or simulating the functions of the equipment controlled by 5A992.b; or ''software'' designed or modified to protect against malicious computer damage, e.g., viruses has been revised to require a license to countries identified by AT Column 2.

(28) ECCN 5E992 is amended by revising the entry heading, the License Requirements and List of Items Controlled sections. Specifically, this rule clarifies that ''technology'' n.e.s., for the ''development'', ''production'' or ''use'' of telecommunications equipment containing encryption (e.g., equipment controlled by 5A992.a) or ''software'' controlled by 5D992.a.1 or b.1 requires a license to countries identified by AT Column 1. In addition, this entry corrects an inadvertent error of the January 15 rule. ''Technology'', n.e.s., for the ''development'', ''production'', or ''use'' of ''information security'' or cryptologic equipment (e.g. equipment controlled by 5A992.b), or ''software'' controlled by 5D992.a.2, b.2, or c has been revised to require a license to countries identified AT Column 2.

(29) ECCN 6A003 is amended by revising the List of Items Controlled section by revising the phrase ''cameras for normal civil purposes'' to read ''cameras designed for civil purposes'' , in the note to 6A003.a.1. This revision is consistent with revisions agreed to and implemented by the Wassenaar Arrangement in December 1997.

(30) ECCN 6A005 is amended:

(a) By revising the reference to ''c.2.d.2.b'' under the Controls section for NP to read ''c.2.b.2.b'';

(b) By revising the List of Items Controlled section, as follows:

(1) By revising 6A005.a.6 as follows ''Krypton ion or argon ion ''lasers'' having any of the following.'' This revision is consistent with revisions agreed to and implemented by the Wassenaar Arrangement in December 1997.

(1) By revising the reference to ''6A005.c.2.d'' to read ''6A005.c.2.c'' in the note immediately following paragraph c.2.b.

(31) ECCN 6A007 is amended by revising the List of Items Controlled section, as follows:

(a) By revising the phrase ''Gravity meters for ground use'' to read ''Gravity meters designed or modified for ground use'' in 6A007.a; and

(b) By revising the phrase ''Gravity meters for mobile platforms'' to read ''Gravity meters designed for mobile platforms'' in 6A007.b.

These revisions are consistent with revisions agreed to and implemented by the Wassenaar Arrangement in December 1997.

(32) ECCN 6A008 is amended by revising the List of Items Controlled section by revising the reference to ''used'' to read ''designed'' in the note to 6A008.l.4. This revision is consistent with revisions agreed to and implemented by the Wassenaar Arrangement in December 1997.

(33) ECCN 7D003 is amended by adding a License Exceptions section, as follows: ''CIV: N/A; TSR: N/A''.

(34) ECCN 8A002 is amended by revising the List of Items Controlled section by removing the reference ''equipment for'' from 8A002.b. This revision is consistent with revisions agreed to and implemented by the Wassenaar Arrangement in December 1997.

(35) ECCN 8A992 is amended by revising the List of Items Controlled section by removing paragraph i and by redesignating paragraphs j, k, and l as paragraphs i, j, and k.

(36) ECCN 9A018 is amended by removing the second reference to that entry.

Rulemaking Requirements

1. This final rule has been determined to be not significant for the purposes of Executive Order 12866.

2. Notwithstanding any other provision of law, no person is required to respond to nor be subject to a penalty for failure to comply with a collection of information subject to the requirements of the Paperwork Reduction Act unless that collection of information displays a current valid OMB Control Number. This rule involves collections of information subject to the Paperwork Reduction Act of 1980 (44 U.S.C. 3501 *et seq.*). These collections have been approved by the Office of Management and Budget under control numbers 0694–0086 and 0694-0088.

3. This rule does not contain policies with Federalism implications sufficient to warrant preparation of a Federalism assessment under Executive Order 12612.

4. Because a notice of proposed rulemaking and an opportunity for public comment are not required to be given for this rule by the Administrative Procedure Act (5 U.S.C. 553) or by any other law, under section 3(a) of the Regulatory Flexibility Act (5 U.S.C. 603(a) and 604(a)) no initial or final Regulatory Flexibility Analysis has to be or will be prepared.

5. The provisions of the Administrative Procedure Act, (5 U.S.C. 553), requiring notice of proposed rulemaking, the opportunity for public participation, and a delay in effective date, are inapplicable because this regulation involves a military or foreign affairs function of the United States. No other law requires that a notice of proposed rulemaking and an opportunity for public comment be given for this rule.

Accordingly, it is issued in final form. However, comments from the public are always welcome. Comments should be submitted to Patricia Muldonian, Office of Exporter Services, Bureau of Export Administration, Department of Commerce, P.O. Box 273, Washington, DC 20044.

List of Subjects in 15 CFR Part 774

Exports, Foreign trade.

Accordingly, Part 774 of the Export Administration Regulations (15 CFR Parts 730 through 799) is amended as follows:

1. The authority citation for 15 CFR Part 774 continues to read as follows:

Authority: 50 U.S.C. app. 2401 *et seq.*; 50 U.S.C. 1701 *et seq.*; 10 U.S.C. 7420; 10 U.S.C. 7430(e); 18 U.S.C. 2510 *et seq.*; 22 U.S.C. 287c; 22 U.S.C. 3201 *et seq.*; 22 U.S.C. 6004; Sec. 201, Pub. L. 104–58, 109 Stat. 557 (30 U.S.C. 185(s)); 30 U.S.C. 185(u); 42 U.S.C. 2139a; 42 U.S.C. 6212; 43 U.S.C. 1354; 46 U.S.C. app. 466c; 50 U.S.C. app. 5; E.O. 12924, 3 CFR, 1994 Comp., p. 917; E.O. 13020, 3 CFR, 1996 Comp. p. 219; E.O. 13026, 3 CFR, 1996 Comp., p. 228; Notice of August 13, 1997 (62 FR 43629, August 15, 1997); Notice of August 17, 1998 (63 FR 55121, August 17, 1998).

PART 774—[AMENDED]

Supplement No. 1 to Part 774—The Commerce Control List

2. In Supplement No. 1 to part 774 (the Commerce Control List), Category 0—Nuclear Materials, Facilities, and Equipment [and Miscellaneous Items], the following Export Control Classification Numbers (ECCNs) are amended:

a. By revising the entry heading and License Requirements section for ECCN 0A982;

b. By revising the List of Items Controlled section for ECCN 0D001; and

c. By revising the List of Items Controlled section for 0E001, as follows:

0A982 Saps; thumbcuffs, leg irons, shackles, and handcuffs; straight jackets, plastic handcuffs, police helmets and shields; and parts and accessories, n.e.s.

License Requirements

Reason for Control: CC

Control(s)	*Country Chart*
CC applies to entire entry ..	CC Column 1

* * * * *

0D001 ''Software'' specially designed or modified for the ''development'', ''production'' or ''use'' of goods controlled by this Category.

* * * * *

List of Items Controlled

Unit: $ value

Related Controls: (1) ''Software'' for items controlled by 0A001, 0B001, 0B002, 0B004, 0B005, 0B006, 0B009, 0C001, 0C002, 0C004, 0C005, 0C006, and 0C201 are subject to the export licensing authority of the Nuclear Regulatory Commission (see 10 CFR part 110). (2) ''Software'' for items controlled by 0A002 are subject to the export licensing authority of the U.S. Department of State, Office of Defense Trade Controls (see 22 CFR part 121).

Related Definitions: N/A

Items: The List of Items Controlled is contained in the ECCN heading.

0E001 ''Technology'' according to the Nuclear Technology Note for the ''development'', ''production'' or ''use'' of items controlled by this Category.

* * * * *

List of Items Controlled

Unit: N/A

Related Controls: (1) ''Technology'' for items controlled by 0A001, 0B001, 0B002, 0B004, 0B005, 0B006, 0B009, 0C001, 0C002, 0C004, 0C005, 0C006, and 0C201 are subject to the export licensing authority of the Department of Energy (see 10 CFR part 810). (2) ''Technology'' for items controlled by 0A002 are subject to the export licensing authority of the U.S. Department of State, Office of Defense Trade Controls (see 22 CFR part 121).

Related Definitions: N/A

Items: The list of items controlled is contained in the ECCN heading.

3. In Supplement No. 1 to part 774 (the Commerce Control List), Category 1—Materials, Chemicals, ''Microorganisms'', and Toxins, the following Export Control Classification Numbers (ECCNs) are amended:

a. By revising the List of Items Controlled section for ECCN 1A002;

b. By revising the License Requirements section and the License Exceptions section for ECCN 1A005;

c. By revising the List of Items Controlled section for ECCN 1C001;

d. By revising the License Exceptions section for ECCN 1C006;

e. [Reserved]

f. By revising the License Requirements section for ECCN 1D390; and

g. By revising the entry heading for ECCNs 1D993 and 1E994; and

h. By revising the entry heading and the License Exceptions section for 1E001, as follows:

1A002 ''Composite'' structures or laminates, having any of the following (see List of Items Controlled).

* * * * *

List of Items Controlled

Unit: Kilograms

Related Controls: (1) See also 1A202, 9A010, and 9A110. (2) Composite structures that are specially designed for missile application (including specially designed subsystems and components) are controlled by 9A1102.) (3) This entry does not control ''composite'' structures or laminates made from epoxy resin

impregnated carbon ''fibrous or filamentary materials'' for the repair of aircraft structures of laminates, provided that the size does not exceed one square meter (1 m^2).

Related Definitions: N/A

Items: a. An organic ''matrix'' and made from materials controlled by 1C010.c, 1C010.d or 1C010.e; *or*

b. A metal or carbon ''matrix'' and made from:

b.1. Carbon ''fibrous or filamentary materials'' with:

b.1.a. A ''specific modulus'' exceeding 10.15 x 10^6 m; *and*

b.1.b. A ''specific tensile strength'' exceeding 17.7 x 10^4 m; *or*

b.2. Materials controlled by 1C010.c.

Technical Notes: (1) Specific modulus: Young's modulus in pascals, equivalent to N/m^2 divided by specific weight in N/m^3, measured at a temperature of (296±2) K ((23±2) C) and a relative humidity of (50±5)%. (2) Specific tensile strength: ultimate tensile strength in pascals, equivalent to N/m^2 divided by specific weight in N/m^3, measured at a temperature of (296±2) K ((23±2) C) and a relative humidity of (50±5)%.

1A005 Body armor, and specially designed components therefor, not manufactured to military standards or specifications, nor to their equivalents in performance.

License Requirements

Reason for Control: NS, UN, AT

Control(s)	*Country Chart*
NS applies to entire entry ..	NS Column 2
UN applies to entire entry	Rwanda, Federal Republic of Yugoslavia (Serbia and Montenegro)
AT applies to entire entry	AT Column 1

License Exceptions

LVS: N/A
GBS: Yes, except UN
CIV: N/A

* * * * *

1C001 Materials specially designed for use as absorbers of electromagnetic waves, or intrinsically conductive polymers, as follows (see List of Items Controlled).

* * * * *

List of Items Controlled

Unit: Kilograms
Related Controls: See also 1C101
Related Definitions: N/A

Items: a. Materials for absorbing frequencies exceeding 2×10^8 Hz but less than 3×10^{12} Hz.

Note: 1C001.a does not control:

a. Hair type absorbers, constructed of natural or synthetic fibers, with non-magnetic loading to provide absorption;

b. Absorbers having no magnetic loss and whose incident surface is non-planar in shape, including pyramids, cones, wedges and convoluted surfaces;

c. Planar absorbers, having all of the following characteristics:

1. Made from any of the following:

a. Plastic foam materials (flexible or non-flexible) with carbon-loading, or organic materials, including binders, providing more than 5% echo compared with metal over a bandwidth exceeding ±15% of the center frequency of the incident energy, and not capable of withstanding temperatures exceeding 450 K (177° C); *or*

b. Ceramic materials providing more than 20% echo compared with metal over a bandwidth exceeding ±15% of the center frequency of the incident energy, and not capable of withstanding temperatures exceeding 800 K (527° C);

Technical Note: Absorption test samples for 1C001.a. Note 1.c.1 should be a square at least 5 wavelengths of the center frequency on a side and positioned in the far field of the radiating element.

2. Tensile strength less than 7×10^6 N/m^2; *and*

3. Compressive strength less than 14×10^6 N/m^2;

d. Planar absorbers made of sintered ferrite, having:

1. A specific gravity exceeding 4.4; *and*

2. A maximum operating temperature of 548 K (275° C).

N.B.: Nothing in this note releases magnetic materials to provide absorption when contained in paint.

b. Materials for absorbing frequencies exceeding 1.5×10^{14} Hz but less than 3.7×10^{14} Hz and not transparent to visible light;

c. Intrinsically conductive polymeric materials with a bulk electrical conductivity exceeding 10,000 S/m (Siemens per meter) or a sheet (surface) resistivity of less than 100 ohms/square, based on any of the following polymers:

c.1. Polyaniline;
c.2. Polypyrrole;
c.3. Polythiophene;
c.4. Poly phenylene-vinylene; *or*
c.5. Poly thienylene-vinylene.

Technical Note: Bulk electrical conductivity and sheet (surface) resistivity should be determined using ASTM D–257 or national equivalents.

1C006 Fluids and lubricating materials, as follows (see List of Items Controlled).

* * * * *

License Exceptions

LVS: $3000
GBS: Yes for 1C006.d
CIV: Yes for 1C006.d

* * * * *

1D390 ''Software'' for process control that is specifically configured to control or initiate ''production'' of chemicals controlled by 1C350.

License Requirements

Reason for Control: CB, AT

Control(s)	*Country Chart*
CB applies to entire entry ..	CB Column 2
AT applies to entire entry	AT Column 1

* * * * *

1D993 ''Software'' specially designed for the ''development'', ''production'', or ''use'' of equipment or materials controlled by 1C210.b or 1C990.

* * * * *

1E001 ''Technology'' according to the General Technology Note for the ''development'' or ''production'' of items controlled by 1A001.b, 1A001.c, 1A002, 1A003, 1A102, 1B or 1C (except 1C980 to 1C984, 1C988, 1C990, 1C991, 1C992, and 1C995).

* * * * *

License Exceptions

CIV: N/A
TSR: Yes, except for the following:

(1) Items controlled for MT reasons; or

(2) Exports and reexports to destinations outside of Austria, Belgium, Canada, Denmark, Finland, France, Germany, Greece, Ireland, Italy, Japan, Luxembourg, the Netherlands, Portugal, Spain, Sweden, or the United Kingdom of ''technology'' for the ''development'' or ''production'' of the following:

(a) Items controlled by 1C001; or

(b) Items controlled by 1A002.a which are composite structures or laminates having an organic ''matrix'' and being made from materials listed under 1C010.c or 1C010.d.

* * * * *

1E994 ''Technology'' for the ''development'', ''production'', or ''use'' of fibrous and filamentary materials controlled by 1C990.

* * * * *

4. In Supplement No. 1 to part 774 (the Commerce Control List), Category 2—Material Processing, Export Control Classification Numbers (ECCNs) are amended:

a. By revising the List of items controlled section for 2B001;

b. By revising the entry heading for ECCNs 2B003 and 2B004;

c. By revising the entry heading and the List of Items Controlled section for ECCN 2B005;

d. By revising the License Requirements section for ECCN 2B104; and

e. By revising the List of Items Controlled section for ECCN 2B996; and

f. By revising the List of Items Controlled section for ECCN 2E003 (the table remains unchanged), as follows:

2B001 Machine tools and any combination thereof, for removing (or cutting) metals, ceramics or ''composites'', which, according to the manufacturer's technical specification, can be equipped with electronic devices for ''numerical control''.

* * * * *

List of Items Controlled

Unit: Equipment in number; parts and accessories in $ value

Related Controls: See also 2B201, 2B290 and 2B991

Related Definitions: N/A

Items: a. Machine tools for turning, having all of the following characteristics:

a.1. Positioning accuracy with all compensations available of less (better) than 6 µm along any linear axis; and

a.2. Two or more axes which can be coordinated simultaneously for ''contouring control'';

Note: 2B001.a does not control turning machines specially designed for the production of contact lenses.

b. Machine tools for milling, having any of the following characteristics:

b.1.a. Positioning accuracy with all compensations available of less (better) than 6 µm along any linear axis (overall positioning); *and*

b.1.b. Three linear axes plus one rotary axis which can coordinated simultaneously for ''contouring control'';

b.2. Five or more axes which can be coordinated simultaneously for ''contouring control''; *or*

b.3. A positioning accuracy for jig boring machines, with all compensations available, of less (better) than 4 µm along any linear axis (overall positioning);

c. Machine tools for grinding, having any of the following characteristics:

c.1.a. Positioning accuracy with all compensations available of less (better) than 4 µm along any linear axis (overall positioning); *and*

c.1.b. Three or more axes which can be coordinated simultaneously for ''contouring control''; *or*

c.2. Five or more axes which can be coordinated simultaneously for ''contouring control'';

Notes: 2B001.c does not control grinding machines, as follows:

1. Cylindrical external, internal, and external-internal grinding machines having all the following characteristics:

a. Limited to cylindrical grinding; *and*

b. Limited to a maximum workpiece capacity of 150 mm outside diameter or length.

2. Machines designed specifically as jig grinders having any of following characteristics:

a. The c-axis is used to maintain the grinding wheel normal to the work surface; *or*

b. The a-axis is configured to grind barrel cams.

3. Tool or cutter grinding machines shipped as complete systems with ''software'' specially designed for the production of tools or cutters.

4. Crank shaft or cam shaft grinding machines.

5. Surface grinders.

d. Electrical discharge machines (EDM) of the non-wire type which have two or more rotary axes which can be coordinated simultaneously for ''contouring control'';

e. Machine tools for removing metals, ceramics or ''composites'':

e.1. By means of:

e.1.a. Water or other liquid jets, including those employing abrasive additives;

e.1.b. Electron beam; *or*

e.1.c. ''Laser'' beam; *and*

e.2. Having two or more rotary axes which:

e.2.a. Can be coordinated simultaneously for ''contouring control''; *and*

e.2.b. Have a positioning accuracy of less (better) than 0.003°;

f. Deep-hole-drilling machines and turning machines modified for deep-hole-drilling, having a maximum depth-of-bore capability exceeding 5,000 mm and specially designed components therefor.

2B003 ''Numerically controlled'' or manual machine tools, and specially designed components, controllers and accessories therefor, specially designed for the shaving, finishing, grinding or honing of hardened (R_c = 40 or more) spur, helical and double-helical gears with a pitch diameter exceeding 1,250 mm and a face width of 15% of pitch diameter or larger finished to a quality of AGMA 14 or better (equivalent to ISO 1328 class 3).

* * * * *

2B004 Hot ''isostatic presses'', having all of the following characteristics described in the List of Items Controlled, and specially designed dies, molds, components, controllers, accessories and controls therefor.

* * * * *

2B005 Equipment specially designed for the deposition, processing and in-process control of inorganic overlays, coatings and surface modifications, as follows, for non-electronic substrates, by processes shown in the Table and associated Notes following 2E003.f, and specially designed automated handling, positioning, manipulation and control components therefor.

* * * * *

List of Items Controlled

Unit: $ value

Related Controls: (1) This entry does not control chemical vapor deposition, cathodic arc, sputter deposition, ion plating or ion implantation equipment specially designed for cutting or machining tools. (2) Vapor deposition equipment designed or modified for the production of filamentary materials are controlled by 1B101. (3) Chemical Vapor Deposition furnaces designed or modified for densification of carbon-carbon composites are controlled by 2B104.

Related Definitions: N/A

Items: a. ''Stored program controlled'' chemical vapor deposition (CVD) production equipment having all of the following:

a.1. Process modified for one of the following:

a.1.a. Pulsating CVD;

a.1.b. Controlled nucleation thermal deposition (CNTD); *or*

a.1.c. Plasma enhanced or plasma assisted CVD; *and*

a.2. Any of the following:

a.2.a. Incorporating high vacuum (equal to or less than 0.01 Pa) rotating seals; *or*

a.2.b. Incorporating *in situ* coating thickness control;

b. ''Stored program controlled'' ion implantation production equipment having beam currents of 5 mA or more;

c. ''Stored program controlled'' electron beam physical vapor (EB-PVD) production equipment incorporating all of the following:

c.1. Power systems rated for over 80 kW;

c.2. A liquid pool level ''laser'' control system which regulates precisely the ingots feed rate; *and*

c.3. A computer controlled rate monitor operating on the principle of photo-luminescence of the ionized atoms in the evaporant stream to control the deposition rate of a coating containing two or more elements;

d. ''Stored program controlled'' plasma spraying production equipment having any of the following characteristics:

d.1. Operating at reduced pressure controlled atmosphere (equal or less than 10 kPa measured above and within 300 mm of the gun nozzle exit) in a vacuum chamber capable of evacuation down to 0.01 Pa prior to the spraying process; *or*

d.2. Incorporating *in situ* coating thickness control;

e. ''Stored program controlled'' sputter deposition production equipment capable of current densities of 0.1 mA/mm ^{2} or higher at a deposition rate 15 µm/h or more;

f. ''Stored program controlled'' cathodic arc deposition equipment incorporating a grid of electromagnets for steering control of the arc spot on the cathode;

g. ''Stored program controlled'' ion plating production equipment allowing for the *in situ* measurement of any of the following:

g.1. Coating thickness on the substrate and rate control; or

g.2. Optical characteristics.

2B104 Equipment and process controls designed or modified for densification and pyrolysis of structural composite rocket nozzles and reentry vehicle nose tips.

License Requirements

Reason for Control: MT, AT

Control(s)	*Country Chart*
MT applies to entire entry	MT Column 1
AT applies to entire entry	AT Column 1

* * * * *

2B996 Dimensional inspection or measuring systems or equipment not controlled by 2B006.

* * * * *

List of Items Controlled

Unit: Equipment in number

Related Controls: N/A

Related Definitions: N/A

Items: a. Manual dimensional inspection machines, having both of the following characteristics:

a.1. Two or more axes; *and*

a.2. A measurement uncertainty equal to or less (better) than (3 + L/300) micrometer in any axes (L measured length in mm).

2E003 Other ''technology'', as follows (see List of Items Controlled).

* * * * *

List of Items Controlled

Unit: N/A

Related Controls: ''Technology'', not controlled by 2E001 and 2E002, for spin forming machines combining the functions of spin forming and flow forming, and for flow forming machines controlled by 2B009 and 2B109, are controlled by 2E101.

Related Definitions: N/A

Items: a. ''Technology'' for the ''development'' of interactive graphics as an integrated part in ''numerical control'' units for preparation or modification of part programs;

b. ''Technology'' for metal-working manufacturing processes, as follows:

b.1. ''Technology'' for the design of tools, dies or fixtures specially designed for any of the following processes:

b.1.a. ''Superplastic forming'';

b.1.b. ''Diffusion bonding''; *or*

b.1.c. ''Direct-acting hydraulic pressing'';

b.2. Technical data consisting of process methods or parameters as listed below used to control:

b.2.a. ''Superplastic forming'' of aluminum alloys, titanium alloys or ''superalloys'':

b.2.a.1. Surface preparation;

b.2.a.2. Strain rate;

b.2.a.3. Temperature;

b.2.a.4. Pressure;

b.2.b. ''Diffusion bonding'' of ''superalloys'' or titanium alloys:

b.2.b.1. Surface preparation;

b.2.b.2. Temperature;

b.2.b.3. Pressure;

b.2.c. ''Direct-acting hydraulic pressing'' of aluminum alloys or titanium alloys:

b.2.c.1. Pressure;

b.2.c.2. Cycle time;

b.2.d. ''Hot isostatic densification'' of titanium alloys, aluminum alloys or ''superalloys'':

b.2.d.1. Temperature;

b.2.d.2. Pressure;

b.2.d. 3. Cycle time;

c. ''Technology'' for the ''development'' or ''production'' of hydraulic stretch-forming machines and dies therefor, for the manufacture of airframe structures;

d. ''Technology'' for the ''development'' of generators of machine tool instructions (e.g., part programs) from design data residing inside ''numerical control'' units;

e. ''Technology'' for the ''development'' of integration ''software'' for incorporation of expert systems for advanced decision support of shop floor operations into ''numerical control'' units;

f. ''Technology'' for the application of inorganic overlay coatings or inorganic surface modification coatings (specified in column 3 of the following table) to non-electronic substrates (specified in column 2 of the following table), by processes specified in column 1 of the following table and defined in the Technical Note.

* * * * *

5. In Supplement No. 1 to part 774 (the Commerce Control List), Category 3—Electronics, Export Control Classification Number (ECCNs) are amended:

a. By revising the List of Items Controlled section for ECCNs 3A001 and 3A002;

b. By revising the License Exceptions section for ECCN 3B001; and

c. By revising the License Exceptions section for ECCN 3C002, as follows:

3A001 Electronic components, as follows (see List of Items Controlled).

* * * * *

List of Items Controlled

Unit: Number

Related Controls: See also 3A101, 3A201, and 3A991

Related Definitions: For the purposes of integrated circuits in 3A001.a.1, 5×10^3 Gy(Si) = 5×10^5 Rads (Si); 5×10^6 Gy (Si)/s = 5×10^8 Rads (Si)/s.

Items: a. General purpose integrated circuits, as follows:

Note 1: The control status of wafers (finished or unfinished), in which the function has been determined, is to be evaluated against the parameters of 3A001.a.

Note 2: Integrated circuits include the following types:

''Monolithic integrated circuits'';
''Hybrid integrated circuits'';
''Multichip integrated circuits'';
''Film type integrated circuits'', including silicon-on-sapphire integrated circuits;
''Optical integrated circuits''.

a.1. Integrated circuits, designed or rated as radiation hardened to withstand any of the following:

a.1.a. A total dose of 5×10^3 Gy (Si), or higher; *or*

a.1.b. A dose rate upset of 5×10^6 Gy (Si)/s, or higher;

a.2. Integrated circuits described in 3A001.a.3 to 3A001.a.10 or 3A001.a.12, electrical erasable programmable read-only memories (EEPROMs), flash memories and static random-access memories (SRAMs), having any of the following:

a.2.a. Rated for operation at an ambient temperature above 398 K (125° C);

a.2.b. Rated for operation at an ambient temperature below 218 K (−55° C); or

a.2.c. Rated for operation over the entire ambient temperature range from 218 K (−55° C) to 398 K (125° C);

Note: 3A001.a.2 does not apply to integrated circuits for civil automobiles or railway train applications.

a.3. ''Microprocessor microcircuits'', ''micro-computer microcircuits'' and microcontroller microcircuits, having any of the following characteristics:

Note: 3A001.a.3 includes digital signal processors, digital array processors and digital coprocessors.

a.3.a. A ''composite theoretical performance'' (''CTP'') of 260 million theoretical operations per second (Mtops) or more and an arithmetic logic unit with an access width of 32 bit or more;

a.3.b. Manufactured from a compound semiconductor and operating at a clock frequency exceeding 40 MHz; *or*

a.3.c. More than one data or instruction bus or serial communication port for external interconnection in a parallel processor with a transfer rate exceeding 2.5 Mbyte/s;

a.4. Storage integrated circuits manufactured from a compound semiconductor;

a.5. Analog-to-digital and digital-to-analog converter integrated circuits, as follows:

a.5.a. Analog-to-digital converters having any of the following:

a.5.a.1. A resolution of 8 bit or more, but less than 12 bit, with a total conversion time to maximum resolution of less than 10 ns;

a.5.a.2. A resolution of 12 bit with a total conversion time to maximum resolution of less than 200 ns; *or*

a.5.a.3. A resolution of more than 12 bit with a total conversion time to maximum resolution of less than 2 μs;

a.5.b. Digital-to-analog converters with a resolution of 12 bit or more, and a ''settling time'' of less than 10 ns;

a.6. Electro-optical and ''optical integrated circuits'' designed for ''signal processing'' having all of the following:

a.6.a. One or more than one internal ''laser'' diode;

a.6.b. One or more than one internal light detecting element; *and*

a.6.c. Optical waveguides;

a.7. Field programmable gate arrays having any of the following:

a.7.a. An equivalent usable gate count of more than 30,000 (2 input gates); *or*

a.7.b. A typical ''basic gate propagation delay time'' of less than 0.4 ns;

a.8. Field programmable logic arrays having any of the following:

a.8.a. An equivalent usable gate count of more than 30,000 (2 input gates); *or*

a.8.b. A toggle frequency exceeding 133 MHz;

a.9. Neural network integrated circuits;

a.10. Custom integrated circuits for which the function is unknown, or the control status of the equipment in which the integrated circuits will be used is unknown to the manufacturer, having any of the following:

a.10.a. More than 208 terminals;

a.10.b. A typical ''basic gate propagation delay time'' of less than 0.35 ns; *or*

a.10.c. An operating frequency exceeding 3 GHz;

a.11. Digital integrated circuits, other than those described in 3A001.a.3 to 3A001.a.10 and 3A001.a.12, based upon any compound semiconductor and having any of the following:

a.11.a. An equivalent gate count of more than 300 (2 input gates); *or*

a.11.b. A toggle frequency exceeding 1.2 GHz;

a.12. Fast Fourier Transform (FFT) processors having any of the following:

a.12.a. A rated execution time for a 1,024 point complex FFT of less than 1 ms;

a.12.b. A rated execution time for an N-point complex FFT of other than 1,024 points of less than N $\log_2$ N/10,240 ms, where N is the number of points; *or*

a.12.c. A butterfly throughput of more than 5.12 MHz; b. Microwave or millimeter wave components, as follows:

b.1. Electronic vacuum tubes and cathodes, as follows:

Note: 3A001.b.1 does not control tubes designed or rated to operate in the ITU allocated bands at frequencies not exceeding 31 GHz.

b.1.a. Travelling wave tubes, pulsed or continuous wave, as follows:

b.1.a.1. Operating at frequencies higher than 31 GHz;

b.1.a.2. Having a cathode heater element with a turn on time to rated RF power of less than 3 seconds;

b.1.a.3. Coupled cavity tubes, or derivatives thereof, with an ''instantaneous bandwidth'' of more than 7% or a peak power exceeding 2.5 kW;

b.1.a.4. Helix tubes, or derivatives thereof, with any of the following characteristics:

b.1.a.4.a. An ''instantaneous bandwidth'' of more than one octave, and average power (expressed in kW) times frequency (expressed in GHz) of more than 0.5;

b.1.a.4.b. An ''instantaneous bandwidth'' of one octave or less, and average power (expressed in kW) times frequency (expressed in GHz) of more than 1; *or*

b.1.a.4.c. Being ''space qualified'';

b.1.b. Crossed-field amplifier tubes with a gain of more than 17 dB;

b.1.c. Impregnated cathodes designed for electronic tubes, with any of the following:

b.1.c.1. A turn on time to rated emission of less than 3 seconds; *or*

b.1.c.2. Producing a continuous emission current density at rated operating conditions exceeding 5 A/cm^2;

b.2. Microwave integrated circuits or modules containing ''monolithic integrated circuits'' operating at frequencies exceeding 3 GHz;

Note: 3A001.b.2 does not control circuits or modules for equipment designed or rated to operate in the ITU allocated bands at frequencies not exceeding 31 GHz.

b.3. Microwave transistors rated for operation at frequencies exceeding 31 GHz;

b.4. Microwave solid state amplifiers, having any of the following:

b.4.a. Operating frequencies exceeding 10.5 GHz and an ''instantaneous bandwidth'' of more than half an octave; *or*

b.4.b. Operating frequencies exceeding 31 GHz;

b.5. Electronically or magnetically tunable band-pass or band-stop filters having more than 5 tunable resonators capable of tuning across a 1.5:1 frequency band (F_{max}/F_{min}) in less than 10 μs having any of the following:

b.5.a. A band-pass bandwidth of more than 0.5% of center frequency; *or*

b.5.b. A band-stop bandwidth of less than 0.5% of center frequency;

b.6. Microwave ''assemblies'' capable of operating at frequencies exceeding 31 GHz;

b.7. Mixers and converters designed to extend the frequency range of equipment described in 3A002.c, 3A002.e or 3A002.f beyond the limits stated therein;

b.8. Microwave power amplifiers containing tubes controlled by 3A001.b and having all of the following:

b.8.a. Operating frequencies above 3 GHz;

b.8.b. An average output power density exceeding 80 W/kg; *and*

b.8.c. A volume of less than 400 cm^3;

Note: 3A001.b.8 does not control equipment designed or rated for operation in an ITU allocated band.

c. Acoustic wave devices, as follows, and specially designed components therefor:

c.1. Surface acoustic wave and surface skimming (shallow bulk) acoustic wave devices (i.e., ''signal processing'' devices employing elastic waves in materials), having any of the following:

c.1.a. A carrier frequency exceeding 2.5 GHz;

c.1.b. A carrier frequency exceeding 1 GHz, but not exceeding 2.5 GHz, and having any of the following:

c.1.b.1. A frequency side-lobe rejection exceeding 55 dB;

c.1.b.2. A product of the maximum delay time and the bandwidth (time in μs and bandwidth in MHz) of more than 100;

c.1.b.3. A bandwidth greater than 250 MHz; *or*

c.1.b.4. A dispersive delay of more than 10 μs; *or*

c.1.c. A carrier frequency of 1 GHz or less, having any of the following:

c.1.c.1. A product of the maximum delay time and the bandwidth (time in μs and bandwidth in MHz) of more than 100;

c.1.c.2. A dispersive delay of more than 10 μs; *or*

c.1.c.3. A frequency side-lobe rejection exceeding 55 dB and a bandwidth greater than 50 MHz;

c.2. Bulk (volume) acoustic wave devices (i.e., ''signal processing'' devices employing elastic waves) that permit the direct processing of signals at frequencies exceeding 1 GHz;

c.3. Acoustic-optic ''signal processing'' devices employing interaction between acoustic waves (bulk wave or surface wave) and light waves that permit the direct processing of signals or images, including spectral analysis, correlation or convolution;

d. Electronic devices and circuits containing components, manufactured from ''superconductive'' materials specially designed for operation at temperatures below the ''critical temperature'' of at least one of the ''superconductive'' constituents, with any of the following:

d.1. Electromagnetic amplification:

d.1.a. At frequencies equal to or less than 31 GHz with a noise figure of less than 0.5 dB; *or*

d.1.b. At frequencies exceeding 31 GHz;

d.2. Current switching for digital circuits using ''superconductive'' gates with a product of delay time per gate (in seconds) and power dissipation per gate (in watts) of less than $^{-14}$ J; *or*

d.3. Frequency selection at all frequencies using resonant circuits with Q-values exceeding 10,000;

e. High energy devices, as follows:

e.1. Batteries and photovoltaic arrays, as follows:

Note: 3A001.e.1 does not control batteries with volumes equal to or less than 27 cm^3 (e.g., standard C-cells or R14 batteries).

e.1.a. Primary cells and batteries having an energy density exceeding 480 Wh/kg and rated for operation in the temperature range from below 243 K (−30° C) to above 343 K (70° C);

e.1.b. Rechargeable cells and batteries having an energy density exceeding 150 Wh/kg after 75 charge/discharge cycles at a discharge current equal to C/5 hours (C being the nominal capacity in ampere hours) when operating in the temperature range from below 253 K (−20° C) to above 333 K (60° C);

Technical Note: Energy density is obtained by multiplying the average power in watts (average voltage in volts times average current in amperes) by the duration of the discharge in hours to 75% of the open circuit voltage divided by the total mass of the cell (or battery) in kg.

e.1.c. ''Space qualified'' and radiation hardened photovoltaic arrays with a specific power exceeding 160 W/m^2 at an operating temperature of 301 K (28° C) under a tungsten illumination of 1 kW/m^2 at 2,800 K (2,527° C);

e.2. High energy storage capacitors, as follows:

N.B.: See also 3A201.a.

e.2.a. Capacitors with a repetition rate of less than 10 Hz (single shot capacitors) having all of the following:

e.2.a.1. A voltage rating equal to or more than 5 kV;

e.2.a.2. An energy density equal to or more than 250 J/kg; and

e.2.a.3. A total energy equal to or more than 25 kJ;

e.2.b. Capacitors with a repetition rate of 10 Hz or more (repetition rated capacitors) having all of the following:

e.2.b.1. A voltage rating equal to or more than 5 kV;

e.2.b.2. An energy density equal to or more than 50 J/kg;

e.2.b.3. A total energy equal to or more than 100 J; *and*

e.2.b.4. A charge/discharge cycle life equal to or more than 10,000;

e.3. ''Superconductive'' electromagnets and solenoids specially designed to be fully charged or discharged in less than one second, having all of the following:

N.B.: See also 3A201.b.

e.3.a. Energy delivered during the discharge exceeding 10 kJ in the first second;

e.3.b. Inner diameter of the current carrying windings of more than 250 mm; *and*

e.3.c. Rated for a magnetic induction of more than 8 T or ''overall current density'' in the winding of more than 300 A/mm^2;

Note: 3A001. e.3 does not control ''superconductive'' electromagnets or solenoids specially designed for Magnetic Resonance Imaging (MRI) medical equipment.

f. Rotary input type shaft absolute position encoders having any of the following:

f.1. A resolution of better than 1 part in 265,000 (18 bit resolution) of full scale; or

f.2. An accuracy better than 2.5 seconds of arc.

3A002 General purpose electronic equipment, as follows (see List of Items Controlled).

* * * * *

List of Items Controlled

Unit: Number

Related Controls: See also 3A202 and 3A992

Related Definitions: N/A

Items: a. Recording equipment, as follows, and specially designed test tape therefor:

a.1. Analog instrumentation magnetic tape recorders, including those permitting the recording of digital signals (e.g., using a high density digital recording (HDDR) module), having any of the following:

a.1.a. A bandwidth exceeding 4 MHz per electronic channel or track;

a.1.b. A bandwidth exceeding 2 MHz per electronic channel or track and having more than 42 tracks; *or*

a.1.c. A time displacement (base) error, measured in accordance with applicable IRIG or EIA documents, of less than ±0.1 s;

Note: Analog magnetic tape recorders specially designed for civilian video purposes are not considered to be instrumentation tape recorders.

a.2. Digital video magnetic tape recorders having a maximum digital interface transfer rate exceeding 180 Mbit/s;

Note: 3A002.a.2 does not control digital video magnetic tape recorders specially designed for television recording using a signal format standardized or recommended by the ITU or the IEC for civil television applications.

a.3. Digital instrumentation magnetic tape data recorders employing helical scan techniques or fixed head techniques, having any of the following:

a.3.a. A maximum digital interface transfer rate exceeding 175 Mbit/s; *or*

a.3.b. Being ''space qualified'';

Note: 3A002.a.3 does not control analog magnetic tape recorders equipped with HDDR conversion electronics and configured to record only digital data.

a.4. Equipment, having a maximum digital interface transfer rate exceeding 175 Mbit/s, designed to convert digital video magnetic tape recorders for use as digital instrumentation data recorders;

a.5. Waveform digitizers and transient recorders having all of the following:

N.B.: See also 3A202.

a.5.a. Digitizing rates equal to or more than 200 million samples per second and a resolution of 10 bits or more; *and*

a.5.b. A continuous throughput of 2 Gbit/s or more;

Technical Note: For those instruments with a parallel bus architecture, the continuous throughput rate is the highest word rate multiplied by the number of bits in a word. Continuous throughput is the fastest data rate the instrument can output to mass storage without the loss of any information while sustaining the sampling rate and analog-to-digital conversion.

b. ''Frequency synthesizer'', ''assemblies'' having a ''frequency switching time'' from one selected frequency to another of less than 1 ms;

c. ''Signal analyzers'', as follows:

c.1. ''Signal analyzers'' capable of analyzing frequencies exceeding 31 GHz;

c.2. ''Dynamic signal analyzers'' having a ''real-time bandwidth'' exceeding 25.6 kHz;

Note: 3A002.c.2 does not control those ''dynamic signal analyzers'' using only constant percentage bandwidth filters.

Technical Note: Constant percentage bandwidth filters are also known as octave or fractional octave filters.

d. Frequency synthesized signal generators producing output frequencies, the accuracy and short term and long term stability of which are controlled, derived from or disciplined by the internal master frequency, and having any of the following:

d.1. A maximum synthesized frequency exceeding 31 GHz;

d.2. A ''frequency switching time'' from one selected frequency to another of less than 1 ms; *or*

d.3. A single sideband (SSB) phase noise better than $-(126 + 20 \log_{10}F - 20 \log_{10}f)$ in dBc/Hz, where F is the off-set from the operating frequency in Hz and f is the operating frequency in MHz;

Note: 3A002.d does not control equipment in which the output frequency is either produced by the addition or subtraction of two or more crystal oscillator frequencies, or by an addition or subtraction followed by a multiplication of the result.

e. Network analyzers with a maximum operating frequency exceeding 40 GHz;

f. Microwave test receivers having all of the following:

f.1. A maximum operating frequency exceeding 40 GHz; *and*

f.2. Being capable of measuring amplitude and phase simultaneously;

g. Atomic frequency standards having any of the following:

g.1. Long-term stability (aging) less (better) than 1×10^{-11}/month; *or*

g.2. Being ''space qualified''.

Note: 3A002.g.1 does not control non-''space qualified'' rubidium standards.

3B001 Equipment for the manufacturing of semiconductor devices or materials and specially designed components and accessories therefor.

* * * * *

License Exceptions

LVS: $500

GBS: ''Yes, except 3B001. a.2 (metal organic chemical vapor deposition reactors), a.3 (molecular beam epitaxial growth equipment using gas sources), e (automatic loading multi-chamber central wafer handling systems *only* if connected to equipment controlled by 3B001.a.2 and a.3, and f), or f (lithography equipment).

CIV: Yes for equipment controlled by 3B001.a.1

* * * * *

3C002 Resist material and ''substrates'' coated with controlled resists.

* * * * *

License Exceptions

LVS: $3000

GBS: Yes for positive resists not optimized for photolithography at a wavelength of less than 365 nm, provided that they are not controlled by 3C002.b through .d.

CIV: Yes for positive resists not optimized for photolithography at a wavelength of less than 365 nm, provided that they are not controlled by 3C002.b through .d.

* * * * *

6. In Supplement No. 1 to part 774 (the Commerce Control List), Category 4—Computers, the following Export Control Classification Numbers (ECCNs) are amended:

a. By revising ECCN 4A003; and

b. By revising the entry heading, License Requirements and License Exceptions sections for ECCNs 4D001 and 4E001, as follows:

4A003 ''Digital computers'', ''electronic assemblies'', and related equipment therefor, and specially designed components therefor.

License Requirements

Reason for Control: NS, MT, CC, AT, NP, XP

Control(s)	*Country Chart*
NS applies to 4A003.b and .c.	NS Column 1
NS applies to 4A003.a, d, .e, .f, and .g.	NS Column 2
MT applies to digital computers used as ancillary equipment for test facilities and equipment that are controlled by 9B005 or 9B006.	MT Column 1
CC applies to digital computers for computerized finger-print equipment.	CC Column 1
AT applies to entire entry (refer to 4A994 for controls on digital computers with a CTP ≥ 6 but ≤ to 2,000 Mtops).	AT Column 1

NP applies to digital computers with a CTP greater than 2,000 Mtops, unless a License Exception is available. See § 742.3(b) of the EAR for information on applicable licensing review policies.

XP applies to digital computers with a CTP greater than 2,000 Mtops, unless a License Exception is available. XP controls vary according to destination and end-user and end-use. See § 742.12 of the EAR for additional information.

Note: For all destinations, except Cuba, Iran, Iraq, Libya, North Korea, Sudan, and Syria, no license is required (NLR) for computers with a CTP of 2,000 Mtops, and for assemblies described in 4A003.c that are not capable of exceeding a CTP of 2,000 Mtops in aggregation. Computers controlled in this entry for MT reasons are not eligible for NLR.

License Requirement Notes: See §§ 740.7(d)(4), 742.12(b)(3)(iv),and 743.1 of the EAR for reporting requirements for exports under License Exceptions.

License Exceptions

LVS: $5000; N/A for MT and ''digital'' computers controlled by 4A003.b and having a CTP exceeding 10,000 MTOPS; or ''electronic assemblies'' controlled by 4A003.c and capable of enhancing performance by aggregation of ''computing elements'' so that the CTP of the aggregation exceeds 10,000 MTOPS.

GBS: Yes, for 4A003.d, .e, .f, and .g and specially designed components therefor, exported separately or as part of a system.

CTP: Yes, for computers controlled by 4A003.a, .b and .c, to the exclusion of other technical parameters, with the exception of parameters specified as controlled for Missile Technology (MT) concerns and 4A003.e (equipment performing analog-to-digital or digital-to-analog conversions exceeding the limits of 3A001.a.5.a). See § 740.7 of the EAR.

CIV: Yes, for 4A003.d (having a 3–D vector rate less than 10 M vectors/sec), .e, .f and .g.

List of Items Controlled

Unit: Equipment in number; parts and accessories in $ value

Related Controls: See also 4A994

Related Definitions: N/A

Items:

Note 1: 4A003 includes the following:

a. Vector processors;

b. Array processors;

c. Digital signal processors;

d. Logic processors;

e. Equipment designed for ''image enhancement'';

f. Equipment designed for ''signal processing''.

Note 2: The control status of the ''digital computers'' and related equipment described in 4A003 is determined by the control status of other equipment or systems provided:

a. The ''digital computers'' or related equipment are essential for the operation of the other equipment or systems;

b. The ''digital computers'' or related equipment are not a ''principal element'' of the other equipment or systems; *and*

N.B. 1: The control status of ''signal processing'' or ''image enhancement'' equipment specially designed for other equipment with functions limited to those required for the other equipment is determined by the control status of the other equipment even if it exceeds the ''principal element'' criterion.

N.B. 2: For the control status of ''digital computers'' or related equipment for telecommunications equipment, see Category 5, Part 1 (Telecommunications).

c. The ''technology'' for the ''digital computers'' and related equipment is determined by 4E (except 4E980, 4E992, and 4E993).

a. Designed or modified for ''fault tolerance'';

Note: For the purposes of 4A003.a., ''digital computers'' and related equipment are not considered to be designed or modified for ''fault tolerance'' if they utilize any of the following:

1. Error detection or correction algorithms in ''main storage'';

2. The interconnection of two ''digital computers'' so that, if the active central processing unit fails, an idling but mirroring central processing unit can continue the system's functioning;

3. The interconnection of two central processing units by data channels or by using shared storage to permit one central processing unit to perform other work until the second central processing unit fails, at which time the first central processing unit takes over in order to continue the system's functioning; or

4. The synchronization of two central processing units by ''software'' so that one central processing unit recognizes when the other central processing unit fails and recovers tasks from the failing unit.

b. ''Digital computers'' having a ''composite theoretical performance'' (''CTP'') exceeding 2,000 million theoretical operations per second (Mtops);

c. ''Electronic assemblies'' specially designed or modified for enhancing performance by aggregation of ''computing elements'' (''CEs'') so that the ''CTP'' of the aggregation exceeds the limit in 4A003.b.;

Note 1: 4A003.c applies only to ''electronic assemblies'' and programmable interconnections not exceeding the limit in 4A003.b. when shipped as unintegrated ''electronic assemblies''. It does not apply to ''electronic assemblies'' inherently limited by nature of their design for use as related equipment controlled by 4A003.d, 4A003.e or 4A003.f.

Note 2: 4A003.c does not control ''electronic assemblies'' specially designed for a product or family of products whose maximum configuration does not exceed the limit of 4A003.b.

d. Graphics accelerators and graphics coprocessors exceeding a ''three dimensional Vector Rate'' of 3,000,000;

e. Equipment performing analog-to-digital conversions exceeding the limits in 3A001.a.5;

f. Equipment containing ''terminal interface equipment'' exceeding the limits in 5A001.b.3;

Note: For the purposes of 4A003.f, ''terminal interface equipment'' includes ''local area network'' interfaces and other communications interfaces. ''Local area network'' interfaces are evaluated as ''network access controllers''.

g. Equipment specially designed to provide external interconnection of ''digital computers'' or associated equipment that allows communications at data rates exceeding 80 Mbyte/s.

Note: 4A003.g does not control internal interconnection equipment (e.g., backplanes, buses) or passive interconnection equipment.

4D001 ''Software'' specially designed or modified for the ''development'', ''production'' or ''use'' of equipment or ''software'' controlled by 4A001 to 4A004, or 4D (except 4D980, 4D993 or 4D994).

License Requirements

Reason for Control: NS, MT, CC, AT, NP, XP

Control(s)	*Country Chart*
NS applies to ''software'' for commodities or software controlled by 4A001 to 4A004, 4D001 to 4D003.	NS Column 1
MT applies to ''software'' for equipment controlled by 4A001 to 4A003 for MT reasons.	MT Column 1
CC applies to ''software'' for computerized fingerprint equipment controlled by 4A003 for CC reasons.	CC Column 1
AT applies to entire entry	AT Column 1

NP applies to digital computers with a CTP greater than 2,000 Mtops, unless a License Exception is available. See § 742.3(b) of the EAR for information on applicable licensing review policies.

XP applies to digital computers with a CTP greater than 2,000 Mtops, unless a License Exception is available. XP controls vary according to destination and end-user and end-use. See § 742.12 of the EAR for additional information.

License Requirement Notes: See § 743.1 of the EAR for reporting requirements for exports under License Exceptions.

License Exceptions

CIV: N/A

TSR: Yes, except for the following:

(1) ''Software'' controlled for MT reasons;

(2) ''Software'' for equipment or ''software'' requiring a license; or

(3) Exports and reexports to destinations outside of Austria, Belgium, Canada, Denmark, Finland, France, Germany, Greece, Ireland, Italy, Japan, Luxembourg, the Netherlands, Portugal, Spain, Sweden, or the United Kingdom of ''software'' specially designed for the ''development'' or ''production'' of equipment controlled as follows:

(a) ''Digital'' computers controlled by 4A003.b and having a CTP exceeding 10,000 MTOPS; or

(b) ''Electronic assemblies'' controlled by 4A003.c and capable of enhancing performance by aggregation of ''computing elements'' so that the CTP of the aggregation exceeds 10,000 MTOPS.

* * * * *

4E001 ''Technology'' according to the General Technology Note, for the ''development'', ''production'' or ''use'' of equipment or ''software'' controlled by 4A (except 4A980, 4A993 or 4A994) or 4D (except 4D980, 4D993, 4D994).

License Requirements

Reason for Control: NS, MT, CC, AT, NP, XP

Control(s)	*Country Chart*
NS applies to ''technology'' for commodities or software controlled by 4A001 to 4A004, 4D001 to 4D003.	NS Column 1
MT applies to ''technology'' for items controlled by 4A001 to 4A003 4A101, 4D001, 4D102 or 4D002 for MT reasons.	MT Column 1
CC applies to ''technology'' for computerized fingerprint equipment controlled by 4A003 for CC reasons.	CC Column 1
AT applies to entire entry	AT Column 1

NP applies to digital computers with a CTP greater than 2,000 Mtops, unless a License Exception is available. See § 742.3(b) of the EAR for information on applicable licensing review policies.

XP applies to digital computers with a CTP greater than 2,000 Mtops, unless a License Exception is available. XP controls vary according to destination and end-user and end-use. See § 742.12 of the EAR for additional information.

License Requirement Notes: See § 743.1 of the EAR for reporting requirements for exports under License Exceptions.

License Exceptions

CIV: N/A

TSR: Yes for ''technology'' directly related for hardware exported under a License Exception. N/A for the following:

(1) ''Technology'' controlled for MT reasons; or

(2) Exports and reexports to destinations outside of Austria, Belgium, Canada, Denmark, Finland, France, Germany, Greece, Ireland, Italy, Japan, Luxembourg, the Netherlands, Portugal, Spain, Sweden, or the United Kingdom of ''technology'' for the ''development'' or ''production'' of the following items:

(a) ''Digital'' computers controlled by 4A003.b and having a CTP exceeding 10,000 MTOPS;

(b) ''Electronic assemblies'' controlled by 4A003.c and capable of enhancing performance by aggregation of ''computing elements'' so that the CTP of the aggregation exceeds 10,000 MTOPS; or

(c) ''Software'' specially designed for the ''development'' or ''production'' of equipment listed in paragraphs (a) or (b) above.

* * * * *

7. In Supplement No. 1 to part 774 (the Commerce Control List, Category 5—Telecommunications and Information Security, Part I—Telecommunications, the following Export Control Numbers (ECCNs) are amended:

a. By revising the List of Items Controlled section for ECCN 5A991; and

b. By revising the License Exceptions section for ECCNs 5D001 and 5E001, as follows:

I. Telecommunications

* * * * *

5A991 Telecommunication equipment, not controlled by 5A001.

* * * * *

List of Items Controlled

Unit: $ value

Related Controls: N/A

Related Definitions: N/A

Items: a. Any type of telecommunications equipment, not controlled by 5A001.a, specially designed to operate outside the temperature range from 219 K (−54° C) to 397 K (124° C).

b. Transmission equipment, as follows:

b.1. Modems using the ''bandwidth of one voice channel'' with a ''data signalling rate'' exceeding 9,600 bits per second;

b.2. ''Communication channel controllers'' with a digital output having a ''data signalling rate'' exceeding 64,000 bit/s per channel; *or*

b.3. ''Network access controller'' and their related common medium having a ''digital transfer rate'' exceeding 33 Mbit/s.

b.4. Being ''stored program controlled'' digital cross connect equipment with ''digital transfer rate'' exceeding 8.5 Mbit/s per port.

b.5. Radio equipment operating at input or output frequencies exceeding:

b.5.1. 31 GHz for satellite-earth station applications; *or*

b.5.2. 26.5 GHz for other applications;

Note: 5A991.b.5. does not control equipment for civil use when conforming with an International Telecommunications Union (ITU) allocated band between 26.5 GHz and 31 GHz.

b.6. Providing functions of digital ''signal processing'' employing circuitry that incorporates ''user-accessible programmability'' of digital ''signal processing'' circuits exceeding the limits of 4A003.b.

c. ''Stored program controlled'' switching equipment and related signalling systems as follows:

c.1. ''Data (message) switching'' equipment or systems designed for ''packet-mode operation'' and assemblies and components therefor, n.e.s.

c.2. Containing ''Integrated Services Digital Network'' (ISDN) functions and having any of the following:

c.2.a. Switch-terminal (e.g., subscriber line) interfaces with a ''digital transfer rate'' at the highest multiplex level exceeding 192,000 bit/s, including the associated signalling channel (e.g., 2B+D); *or*

c.2.b. The capability that a signalling message received by a switch on a given channel that is related to a communication on another channel may be passed through to another switch.

Note: 5A991.b. does not preclude the evaluation and appropriate actions taken by the receiving switch or unrelated user message traffic on a D channel of ISDN.

c.3. Routing or switching of ''datagram'' packets;

c.4. Routing or switching of ''fast select'' packets;

Note: The restrictions in 5A991.c.3 and c.4 do not apply to networks restricted to using only ''network access controllers'' or to ''network access controllers'' themselves.

c.5. Multi-level priority and pre-emption for circuit switching;

Note: 5A991.c.5. does not control single-level call preemption.

c.6. Designed for automatic hand-off of cellular radio calls to other cellular switches or automatic connection to a centralized subscriber data base common to more than one switch;

c.7. Containing ''stored program controlled'' digital crossconnect equipment with ''digital transfer rate'' exceeding 8.5 Mbit/s per port.

c.8. Being packet switches, circuit switches and routers with ports or lines exceeding any of the following:

c.8.a. A ''data signalling rate'' of 64,000 bit/s per channel for a ''communications channel controller''; *or*

Note: 5A991.c.8.a. does not control multiplex composite links composed only of communication channels not individually controlled by 5A001.b.1.

c.8.b. A ''digital transfer rate'' of 33 Mbit/s for a ''network cess controller'' and related common media;

d. Centralized network control having all of the following characteristics:

d.1. Receives data from the nodes; *and*

d.2. Process these data in order to provide control of traffic not requiring operator decisions, and thereby performing ''dynamic adaptive routing'';

Note: 5A991.d. does not preclude control of traffic as a function of predictable statistical traffic conditions.

e. Phased array antennae, operating above 10.5 GHz, containing active elements and distributed components, and designed to permit electronic control of beam shaping and pointing, except for landing systems with instruments meeting International Civil Aviation Organization (ICAO) standards (microwave landing systems (MLS)).

f. Mobile communications equipment, n.e.s., and assemblies and components therefor; *or*

g. Radio relay communications equipment designed for use at frequencies equal to or exceeding 19.7 GHz and assemblies and components therefor, n.e.s.

5D001 ''Software'' as described in the List of Items Controlled.

* * * * *

License Exceptions

CIV: Yes, except for ''software'' controlled by 5D001.a and specially designed for the ''development'' or ''production'' of items controlled by 5A001.b.9.

TSR: Yes, except for exports and reexports to destinations outside of Austria, Belgium, Canada, Denmark, Finland, France, Germany, Greece, Ireland, Italy, Japan, Luxembourg, the Netherlands, Portugal, Spain, Sweden, or the United Kingdom of ''software'' controlled by 5D001.a and specially designed for the ''development'' or ''production'' of items controlled by 5A001.b.9.

* * * * *

5E001 ''Technology'' (see List of Items Controlled).

* * * * *

License Exceptions

CIV: N/A

TSR: Yes, except for exports or reexports to destinations outside of Austria, Belgium, Canada, Denmark, Finland, France, Germany, Greece, Ireland, Italy, Japan, Luxembourg, the Netherlands, Portugal, Spain, Sweden, or the United Kingdom of ''technology'' controlled by 5E001.a for the ''development'' or ''production'' of the following:

(1) Items controlled by 5A001.b.9; or

(2) ''Software'' controlled by 5D001.a that is specially designed for the ''development'' or ''production'' of items controlled by 5A001.b.9.

* * * * *

8. In Supplement No. 1 to part 774 (the Commerce Control List), Category 5—Telecommunications and Information Security, Part 2, Information Security, the following Export Control Classification Numbers (ECCNs) are amended:

a. By revising the entry heading, the License Requirements section and the List of Items Controlled section for ECCNs 5A992 and 5E992;

b. By revising the List of Items Controlled section for ECCN 5D002; and

c. By revising the entry heading, the License Requirements section and the List of Items Controlled section for ECCN 5D992, as follows:

Part 2—Information Security

5A992 Equipment not controlled by 5A002.

License Requirements

Reason for Control: AT

Control(s)	*Country Chart*
AT applies to 5A992.a	AT Column 1
AT applies to 5A992.b	AT Column 2

* * * * *

List of Items Controlled

Unit: $ value

Related Controls: N/A

Related Definitions: N/A

Items: a. Telecommunications equipment containing encryption.

b. ''Information security'' equipment, n.e.s., (e.g., cryptographic cryptoanalytic, and cryptologic equipment, n.e.s.) and components therefor.

5D002 Information Security—''Software''.

* * * * *

List of Items Controlled

Unit: $ value

Related Controls: See also 5D992. This entry does not control ''software'' ''required'' for the ''use'' of equipment excluded from control under to 5A002 or ''software'' providing any of the functions of equipment excluded from control under 5A002.

Related Definitions: 5D002.a controls ''software'' designed or modified to use ''cryptography'' employing digital or analog techniques to ensure ''information security''.

Items: a. ''Software'' specially designed or modified for the ''development'', ''production'' or ''use'' of equipment or ''software'' controlled by 5A002, 5B002 or 5D002.

b. ''Software'' specially designed or modified to support ''technology'' controlled by 5E002.

c. Specific ''software'' as follows:

c.1. ''Software'' having the characteristics, or performing or simulating the functions of the equipment controlled by 5A002 or 5B002;

c.2. ''Software'' to certify ''software'' controlled by 5D002.c.1.

5D992 ''Information Security'' ''software'' not controlled by 5D002.

License Requirements

Reason for Control: AT

Control(s)	*Country Chart*
AT applies to 5D992.a.1 and .b.1.	AT Column 1
AT applies to 5D992.a.2, b.2 and c.	AT Column 2

* * * * *

List of Items Controlled

Unit: $ value

Related Controls: N/A

Related Definitions: N/A

Items: a. ''Software'', as follows:

a.1 ''Software'' specially designed or modified for the ''development'', ''production'', or ''use'' of telecommunications equipment containing encryption (e.g., equipment controlled by 5A992.a);

a.2. ''Software'' specially designed or modified for the ''development'', ''production:, or ''use'' of information security or cryptologic equipment (e.g., equipment controlled by 5A992.b);

b. ''Software'', as follows:

b.1. ''Software'' having the characteristics, or performing or simulating the functions of the equipment controlled by 5A992.a.

b.2. ''Software having the characteristics, or performing or simulating the functions of the equipment controlled by 5A992.b.

c. ''Software'' designed or modified to protect against malicious computer damage, e.g., viruses.

5E992 ''Information Security'' ''technology'', not controlled by 5E002.

License Requirements

Reason for Control: AT

Control(s)	*Country Chart*
AT applies to 5E992.a	AT Column 1
AT applies to 5E992.b	AT Column 2

* * * * *

List of Items Controlled

Unit: N/A

Related Controls: N/A

Related Definitions: N/A

Items: a. ''Technology'' n.e.s, for the ''development'', ''production'' or ''use'' of telecommunications equipment containing encryption (e.g., equipment controlled by 5A992.a) or ''software'' controlled by 5D992.a.1 or b.1.

b. ''Technology'', n.e.s, for the ''development'', ''production'' or ''use'' of ''information security'' or cryptologic equipment (e.g., equipment controlled by 5A992.b), or ''software'' controlled by 5D992.a.2, b.2, or c.

9. In Supplement No. 1 to part 774 (the Commerce Control List, Category 6—Sensors and Lasers, the following Export Control Classification Number (ECCNs) are amended:

a. By revising the List of Items Controlled section for ECCNs 6A001 and 6A003;

b. By revising the License Requirements section and the List of Items Controlled section for ECCN 6A005;

c. By revising the List of Items Controlled section for ECCNs 6A007 and 6A008;

d. By revising the License Exceptions section for ECCNs 6D001 and 6D003; and

e. By revising the entry heading and License Exceptions section for ECCNs 6E001 and 6E002, to read as follows:

6A001 Acoustics.

* * * * *

List of Items Controlled

Unit: $ value

Related Controls: See also 6A991

Related Definitions: N/A

Items: a. Marine acoustic systems, equipment and specially designed components therefor, as follows:

a.1. Active (transmitting or transmitting-and-receiving) systems, equipment and specially designed components therefor, as follows:

Note: 6A001.a.1 does not control:

a. Depth sounders operating vertically below the apparatus, not including a scanning function exceeding ±20°, and limited to measuring the depth of water, the distance of submerged or buried objects or fish finding;

b. Acoustic beacons, as follows:

1. Acoustic emergency beacons;

2. Pingers specially designed for relocating or returning to an underwater position.

a.1.a. Wide-swath bathymetric survey systems designed for sea bed topographic mapping, having all of the following:

a.1.a.1. Being designed to take measurements at an angle exceeding 20° from the vertical;

a.1.a.2. Being designed to measure depths exceeding 600 m below the water surface; *and*

a.1.a.3. Being designed to provide any of the following:

a.1.a.3.a. Incorporation of multiple beams any of which is less than 1.9°; or

a.1.a.3.b. Data accuracies of better than 0.3% of water depth across the swath averaged over the individual measurements within the swath;

a.1.b. Object detection or location systems having any of the following:

a.1.b.1. A transmitting frequency below 10 Khz;

a.1.b.2. Sound pressure level exceeding 224 Db (reference 1 μPa at 1 m) for equipment with an operating frequency in the band from 10 Khz to 24 Khz inclusive;

a.1.b.3. Sound pressure level exceeding 235 Db (reference 1 μPa at 1 m) for equipment with an operating frequency in the band between 24 Khz and 30 Khz;

a.1.b.4. Forming beams of less than 1° on any axis and having an operating frequency of less than 100 Khz;

a.1.b.5. Designed to operate with an unambiguous display range exceeding 5,120 m; *or*

a.1.b.6. Designed to withstand pressure during normal operation at depths exceeding 1,000 m and having transducers with any of the following:

a.1.b.6.a. Dynamic compensation for pressure; *or*

a.1.b.6.b. Incorporating other than lead zirconate titanate as the transduction element;

a.1.c. Acoustic projectors, including transducers, incorporating piezoelectric, magnetostrictive, electrostrictive, electrodynamic or hydraulic elements operating individually or in a designed combination, having any of the following:

Notes: 1. The control status of acoustic projectors, including transducers, specially designed for other equipment is determined by the control status of the other equipment.

2. 6A001.a.1.c does not control electronic sources that direct the sound vertically only, or mechanical (e.g., air gun or vapor-shock gun) or chemical (e.g., explosive) sources.

a.1.c.1. An instantaneous radiated acoustic power density exceeding 0.01 mW/mm²/Hz for devices operating at frequencies below 10 Khz;

a.1.c.2. A continuously radiated acoustic power density exceeding 0.001 Mw/mm²/Hz for devices operating at frequencies below 10 Khz;

Technical Note: Acoustic power density is obtained by dividing the output acoustic power by the product of the area of the radiating surface and the frequency of operation.

a.1.c.3. Designed to withstand pressure during normal operation at depths exceeding 1,000 m; *or*

a.1.c.4. Side-lobe suppression exceeding 22 Db;

a.1.d. Acoustic systems, equipment and specially designed components for determining the position of surface vessels or underwater vehicles having any of the following:

Note: 6A001.a.1.d includes:

a. Equipment using coherent ''signal processing'' between two or more beacons and the hydrophone unit carried by the surface vessel or underwater vehicle;

b. Equipment capable of automatically correcting speed-of-sound propagation errors for calculation of a point.

a.1.d.1. Designed to operate at a range exceeding 1,000 m with a positioning accuracy of less than 10 m rms (root mean square) when measured at a range of 1,000 m; *or*

a.1.d.2. Designed to withstand pressure at depths exceeding 1,000 m; a.2. Passive (receiving, whether or not related in normal application to separate active equipment) systems, equipment and specially designed components therefor, as follows:

a.2.a. Hydrophones (transducers) having any of the following characteristics:

a.2.a.1. Incorporating continuous flexible sensors or assemblies of discrete sensor elements with either a diameter or length less than 20 mm and with a separation between elements of less than 20 mm;

a.2.a.2. Having any of the following sensing elements:

a.2.a.2.a. Optical fibers;

a.2.a.2.b. Piezoelectric polymers; *or*

a.2.a.2.c. Flexible piezoelectric ceramic materials;

a.2.a.3. A hydrophone sensitivity better than −180 Db at any depth with no acceleration compensation;

a.2.a.4. When designed to operate at depths not exceeding 35 m, a hydrophone sensitivity better than −186 Db with acceleration compensation;

a.2.a.5. When designed for normal operation at depths exceeding 35 m, a hydrophone sensitivity better than −192 Db with acceleration compensation;

a.2.a.6. When designed for normal operation at depths exceeding 100 m, a hydrophone sensitivity better than −204 Db; *or*

a.2.a.7. Designed for operation at depths exceeding 1,000 m;

Technical Note: Hydrophone sensitivity is defined as twenty times the logarithm to the base 10 of the ratio of rms output voltage to a 1 V rms reference, when the hydrophone sensor, without a pre-amplifier, is placed in a plane wave acoustic field with an rms pressure of 1 μPa. For example, a hydrophone of −160 Db (reference 1 V per μPa) would yield an output voltage of 10^{-8} V in such a field, while one of −180 Db sensitivity would yield only 10^{-9} V output. Thus, −160 Db is better than −180 Db.

a.2.b. Towed acoustic hydrophone arrays having any of the following:

a.2.b.1. Hydrophone group spacing of less than 12.5 m;

a.2.b.2. Hydrophone group spacing of 12.5 m to less than 25 m and designed or able to be modified to operate at depths exceeding 35 m;

Technical Note: ''Able to be modified'' in 6A001.a.2.b.2 means having provisions to allow a change of the wiring or interconnections to alter hydrophone group spacing or operating depth limits. These provisions are: spare wiring exceeding 10% of the number of wires, hydrophone group spacing adjustment blocks or internal depth limiting devices that are adjustable or that control more than one hydrophone group.

a.2.b.3. Hydrophone group spacing of 25 m or more and designed to operate at depths exceeding 100 m;

a.2.b.4. Heading sensors controlled by 6A001.a.2.d;

a.2.b.5. Longitudinally reinforced array hoses;

a.2.b.6. An assembled array of less than 40 mm in diameter;

a.2.b.7. Multiplexed hydrophone group signals designed to operate at depths exceeding 35 m or having an adjustable or removable depth sensing device in order to operate at depths exceeding 35 m; *or*

a.2.b.8. Hydrophone characteristics controlled by 6A001.a.2.a;

a.2.c. Processing equipment, specially designed for towed acoustic hydrophone

arrays, having ''user accessible programmability'' and time or frequency domain processing and correlation, including spectral analysis, digital filtering and beamforming using Fast Fourier or other transforms or processes;

a.2.d. Heading sensors having all of the following:

a.2.d.1. An accuracy of better than ± 0.5°; *and*

a.2.d.2. Any of the following:

a.2.d.2.a. Designed to be incorporated within the array hosing and to operate at depths exceeding 35 m or having an adjustable or removable depth sensing device in order to operate at depths exceeding 35 m; *or*

a.2.d.2.b. Designed to be mounted external to the array hosing and having a sensor unit capable of operating with 360° roll at depths exceeding 35 m;

a.2.e. Bottom or bay cable systems having any of the following:

a.2.e.1. Incorporating hydrophones controlled by 6A001.a.2.a;

a.2.e.2. Incorporating multiplexed hydrophone group signals designed to operate at depths exceeding 35 m or having an adjustable or removable depth sensing device in order to operate at depths exceeding 35 m; *or*

a.2.f. Processing equipment, specially designed for bottom or bay cable systems, having ''user accessible programmability'' and time or frequency domain processing and correlation, including spectral analysis, digital filtering and beamforming using Fast Fourier or other transforms or processes;

b. Correlation-velocity sonar log equipment designed to measure the horizontal speed of the equipment carrier relative to the sea bed at distances between the carrier and the sea bed exceeding 500 m.

6A003 Cameras.

* * * * *

List of Items Controlled

Unit: Number

Related Controls: See also 6A203. See 8A002 .d and .e for cameras specially designed or modified for underwater use.

Related Definitions: N/A

Items: a. Instrumentation cameras, as follows:

a.1. High-speed cinema recording cameras using any film format from 8 mm to 16 mm inclusive, in which the film is continuously advanced throughout the recording period, and that are capable of recording at framing rates exceeding 13,150 frames/s;

Note: 6A003.a.1 does not control cinema recording cameras designed for civil purposes.

a.2. Mechanical high speed cameras, in which the film does not move, capable of recording at rates exceeding 1,000,000 frames/s for the full framing height of 35 mm film, or at proportionately higher rates for lesser frame heights, or at proportionately lower rates for greater frame heights;

a.3. Mechanical or electronic streak cameras having writing speeds exceeding 10 mm/μs;

a.4. Electronic framing cameras having a speed exceeding 1,000,000 frames/s;

a.5. Electronic cameras, having all of the following:

a.5.a. An electronic shutter speed (gating capability) of less than 1 μs per full frame; *and*

a.5.b. A read out time allowing a framing rate of more than 125 full frames per second.

b. Imaging cameras, as follows:

Note: 6A003.b does not control television or video cameras specially designed for television broadcasting.

b.1. Video cameras incorporating solid state sensors, having any of the following:

b.1.a. More than 4×10^6 ''active pixels'' per solid state array for monochrome (black and white) cameras;

b.1.b. More than 4×10^6 ''active pixels'' per solid state array for color cameras incorporating three solid state arrays; *or*

b.1.c. More than 12×10^6 ''active pixels'' for solid state array color cameras incorporating one solid state array;

b.2. Scanning cameras and scanning camera systems, having all of the following:

b.2.a. Linear detector arrays with more than 8,192 elements per array; *and*

b.2.b. Mechanical scanning in one direction;

b.3. Imaging cameras incorporating image intensifiers having the characteristics listed in 6A002.a.2.a;

b.4. Imaging cameras incorporating ''focal plane arrays'' having the characteristics listed in 6A002.a.3.

6A005 ''Lasers'', components and optical equipment, as follows (see List of Items Controlled).

License Requirements

Reason for Control: NS, NP, AT

Control(s)	*Country Chart*
NS applies to entire entry ..	NS Column 2
NP applies to 6A005.a.1.c, a.2.a (with an output power >40W), a.4.c, a.6, (argon ion lasers only), c.1.b (with an output power >30W), c.2.c.2.a (with an output power >40W), c.2.c.2.b (with an output power >40W), c.2.b.2.b (with an output power >40W), and d.2.c.	NP Column 1
AT applies to entire entry	AT Column 1

* * * * *

List of Items Controlled

Unit: Equipment in number; parts and accessories in $ value

Related Controls: See also 6A205, 6A995, 0B001.g.5 and 0B001.b.6. Shared aperture optical elements, capable of operating in ''super-high power laser'' applications are subject to the export licensing authority of the U.S. Department of State, Office of Defense Trade Controls. (See 22 CFR part 121.)

Related Definitions: (1) Pulsed ''lasers'' include those that run in a continuous wave (CW) mode with pulses superimposed. (2) Pulse-excited ''lasers'' include those that run in a continuously excited mode with pulse excitation superimposed. (3) The control status of Raman ''lasers'' is determined by the parameters of the pumping source ''lasers''. The pumping source ''lasers'' can be any of the ''lasers'' described as follows:

Items: a. Gas ''lasers'', as follows:

a.1. Excimer ''lasers'', having any of the following:

a.1.a. An output wavelength not exceeding 150 nm and having any of the following:

a.1.a.1. An output energy exceeding 50 mJ per pulse; *or*

a.1.a.2. An average or CW output power exceeding 1 W;

a.1.b. An output wavelength exceeding 150 nm but not exceeding 190 nm and having any of the following:

a.1.b.1. An output energy exceeding 1.5 J per pulse; *or*

a.1.b.2. An average or CW output power exceeding 120 W;

a.1.c. An output wavelength exceeding 190 nm but not exceeding 360 nm and having any of the following:

a.1.c.1. An output energy exceeding 10 J per pulse; *or*

a.1.c.2. An average or CW output power exceeding 500 W; *or*

a.1.d. An output wavelength exceeding 360 nm and having any of the following:

a.1.d.1. An output energy exceeding 1.5 J per pulse; *or*

a.1.d.2. An average or CW output power exceeding 30 W;

a.2. Metal vapor ''lasers'', as follows:

a.2.a. Copper (Cu) ''lasers'' having an average or CW output power exceeding 20 W;

a.2.b. Gold (Au) ''lasers'' having an average or CW output power exceeding 5 W;

a.2.c. Sodium (Na) ''lasers'' having an output power exceeding 5 W;

a.2.d. Barium (Ba) ''lasers'' having an average or CW output power exceeding 2 W;

a.3. Carbon monoxide (CO) ''lasers'' having any of the following:

a.3.a. An output energy exceeding 2 J per pulse and a pulsed ''peak power'' exceeding 5 Kw; *or*

a.3.b. An average or CW output power exceeding 5 Kw;

a.4. Carbon dioxide (CO_2) ''lasers'' having any of the following:

a.4.a. A CW output power exceeding 15 Kw;

a.4.b. A pulsed output having a ''pulse duration'' exceeding 10 μs and having any of the following:

a.4.b.1. An average output power exceeding 10 Kw; *or*

a.4.b.2. A pulsed ''peak power'' exceeding 100 Kw; *or*

a.4.c. A pulsed output having a ''pulse duration'' equal to or less than 10 μs; and having any of the following:

a.4.c.1. A pulse energy exceeding 5 J per pulse; *or*

a.4.c.2. An average output power exceeding 2.5 Kw;

a.5. ''Chemical lasers'', as follows:

a.5.a. Hydrogen Fluoride (HF) ''lasers'';

a.5.b. Deuterium Fluoride (DF) ''lasers'';

a.5.c. ''Transfer lasers'', as follows:

a.5.c.1. Oxygen Iodine (O_2–I) ''lasers'';

a.5.c.2. Deuterium Fluoride-Carbon dioxide (DF–CO_2) ''lasers'';

a.6. Krypton ion or argon ion ''lasers'' having any of the following:

a.6.a. An output energy exceeding 1.5 J per pulse and a pulsed ''peak power'' exceeding 50 W; *or*

a.6.b. An average or CW output power exceeding 50 W;

a.7. Other gas ''lasers'', having any of the following:

Note: 6A005.a.7 does not control nitrogen ''lasers''.

a.7.a. An output wavelength not exceeding 150 nm and having any of the following:

a.7.a.1. An output energy exceeding 50 mJ per pulse and a pulsed ''peak power'' exceeding 1 W; *or*

a.7.a.2. An average or CW output power exceeding 1 W;

a.7.b. An output wavelength exceeding 150 nm but not exceeding 800 nm and having any of the following:

a.7.b.1. An output energy exceeding 1.5 J per pulse and a pulsed ''peak power'' exceeding 30 W; *or*

a.7.b.2. An average or CW output power exceeding 30 W;

a.7.c. An output wavelength exceeding 800 nm but not exceeding 1,400 nm and having any of the following:

a.7.c.1. An output energy exceeding 0.25 J per pulse and a pulsed ''peak power'' exceeding 10 W; *or*

a.7.c.2. An average or CW output power exceeding 10 W; *or*

a.7.d. An output wavelength exceeding 1,400 nm and an average or CW output power exceeding 1 W.

b. Individual, multiple-transverse mode semiconductor ''lasers'' and arrays of individual semiconductor ''lasers'', having any of the following:

b.1. An output energy exceeding 500 μJ per pulse and a pulsed ''peak power'' exceeding 10 W; *or*

b.2. An average or CW output power exceeding 10 W.

Technical Note: Semiconductor ''lasers'' are commonly called ''laser'' diodes.

Note 1: 6A005.b includes semiconductor ''lasers'' having optical output connectors (e.g. fiber optic pigtails).

Note 2: The control status of semiconductor ''lasers'' specially designed for other equipment is determined by the control status of the other equipment.

c. Solid state ''lasers'', as follows:

c.1. ''Tunable'' ''lasers'' having any of the following:

Note: 6A005.c.1 includes titanium—sapphire (Ti: Al_2O_3), thulium—YAG (Tm: YAG), thulium—YSGG (Tm: YSGG), alexandrite (Cr: $BeAl_2O_4$) and color center ''lasers''.

c.1.a. An output wavelength less than 600 nm and having any of the following:

c.1.a.1. An output energy exceeding 50 mJ per pulse and a pulsed ''peak power'' exceeding 1 W; *or*

c.1.a.2. An average or CW output power exceeding 1 W;

c.1.b. An output wavelength of 600 nm or more but not exceeding 1,400 nm and having any of the following:

c.1.b.1. An output energy exceeding 1 J per pulse and a pulsed ''peak power'' exceeding 20 W; *or*

c.1.b.2. An average or CW output power exceeding 20 W; *or*

c.1.c. An output wavelength exceeding 1,400 nm and having any of the following:

c.1.c.1. An output energy exceeding 50 mJ per pulse and a pulsed ''peak power'' exceeding 1 W; *or*

c.1.c.2. An average or CW output power exceeding 1 W;

c.2. Non-''tunable'' ''lasers'', as follows:

Note: 6A005.c.2 includes atomic transition solid state ''lasers''.

c.2.a. Neodymium glass ''lasers'', as follows:

c.2.a.1. ''Q-switched lasers'' having any of the following:

c.2.a.1.a. An output energy exceeding 20 J but not exceeding 50 J per pulse and an average output power exceeding 10 W; *or*

c.2.a.1.b. An output energy exceeding 50 J per pulse;

c.2.a.2. Non-''Q-switched lasers'' having any of the following:

c.2.a.2.a. An output energy exceeding 50 J but not exceeding 100 J per pulse and an average output power exceeding 20 W; *or*

c.2.a.2.b. An output energy exceeding 100 J per pulse;

c.2.b. Neodymium-doped (other than glass) ''lasers'', having an output wavelength exceeding 1,000 nm but not exceeding 1,100 nm, as follows:

N.B.: For neodymium-doped (other than glass) ''lasers'' having an output wavelength not exceeding 1,000 nm or exceeding 1,100 nm, see 6A005.c.2.c.

c.2.b.1. Pulse-excited, mode-locked, ''Q-switched lasers'' having a ''pulse duration'' of less than 1 ns and having any of the following:

c.2.b.1.a. A ''peak power'' exceeding 5 GW;

c.2.b.1.b. An average output power exceeding 10 W; *or*

c.2.b.1.c. A pulsed energy exceeding 0.1 J;

c.2.b.2. Pulse-excited, ''Q-switched lasers'' having a pulse duration equal to or more than 1 ns, and having any of the following:

c.2.b.2.a. A single-transverse mode output having:

c.2.b.2.a.1. A ''peak power'' exceeding 100 MW;

c.2.b.2.a.2. An average output power exceeding 20 W; *or*

c.2.b.2.a.3. A pulsed energy exceeding 2 J; *or*

c.2.b.2.b. A multiple-transverse mode output having:

c.2.b.2.b.1. A ''peak power'' exceeding 400 MW;

c.2.b.2.b.2. An average output power exceeding 2 kW; *or*

c.2.b.2.b.3. A pulsed energy exceeding 2 J;

c.2.b.3. Pulse-excited, non-''Q-switched lasers'', having:

c.2.b.3.a. A single-transverse mode output having:

c.2.b.3.a.1. A ''peak power'' exceeding 500 kW; *or*

c.2.b.3.a.2. An average output power exceeding 150 W; *or*

c.2.b.3.b. A multiple-transverse mode output having:

c.2.b.3.b.1. A ''peak power'' exceeding 1 MW; *or*

c.2.b.3.b.2. An average power exceeding 2 kW;

c.2.b.4. Continuously excited ''lasers'' having:

c.2.b.4.a. A single-transverse mode output having:

c.2.b.4.a.1. A ''peak power'' exceeding 500 kW; *or*

c.2.b.4.a.2. An average or CW output power exceeding 150 W; *or*

c.2.b.4.b. A multiple-transverse mode output having:

c.2.b.4.b.1. A ''peak power'' exceeding 1 MW; *or*

c.2.b.4.b.2. An average or CW output power exceeding 2 kW;

c.2.c. Other non-''tunable'' ''lasers'', having any of the following:

c.2.c.1. A wavelength less than 150 nm and having any of the following:

c.2.c.1.a. An output energy exceeding 50 mJ per pulse and a pulsed ''peak power'' exceeding 1 W; *or*

c.2.c.1.b. An average or CW output power exceeding 1 W;

c.2.c.2. A wavelength of 150 nm or more but not exceeding 800 nm and having any of the following:

c.2.c.2.a. An output energy exceeding 1.5 J per pulse and a pulsed ''peak power'' exceeding 30 W; *or*

c.2.c.2.b. An average or CW output power exceeding 30 W;

c.2.c.3. A wavelength exceeding 800 nm but not exceeding 1,400 nm, as follows:

c.2.c.3.a. ''Q-switched lasers'' having:

c.2.c.3.a.1. An output energy exceeding 0.5 J per pulse and a pulsed ''peak power'' exceeding 50 W; *or*

c.2.c.3.a.2. An average output power exceeding:

c.2.c.3.a.2.a. 10 W for single-mode ''lasers'';

c.2.c.3.a.2.b. 30 W for multimode ''lasers'';

c.2.c.3.b. Non-''Q-switched lasers'' having:

c.2.c.3.b.1. An output energy exceeding 2 J per pulse and a pulsed ''peak power'' exceeding 50 W; *or*

c.2.c.3.b.2. An average or CW output power exceeding 50 W; *or*

c.2.c.4. A wavelength exceeding 1,400 nm *and* having any of the following:

c.2.c.4.a. An output energy exceeding 100 mJ per pulse and a pulsed ''peak power'' exceeding 1 W; *or*

c.2.c.4.b. An average or CW output power exceeding 1 W;

d. Dye and other liquid ''lasers'', having any of the following:

d.1. A wavelength less than 150 nm and:

d.1.a. An output energy exceeding 50 mJ per pulse and a pulsed ''peak power'' exceeding 1 W; *or*

d.1.b. An average or CW output power exceeding 1 W;

d.2. A wavelength of 150 nm or more but not exceeding 800 nm and having any of the following:

d.2.a. An output energy exceeding 1.5 J per pulse and a pulsed ''peak power'' exceeding 20 W;

d.2.b. An average or CW output power exceeding 20 W; *or*

d.2.c. A pulsed single longitudinal mode oscillator having an average output power exceeding 1 W and a repetition rate exceeding 1 Khz if the ''pulse duration'' is less than 100 ns;

d.3. A wavelength exceeding 800 nm but not exceeding 1,400 nm and having any of the following:

d.3.a. An output energy exceeding 0.5 J per pulse and a pulsed ''peak power'' exceeding 10 W; *or*

d.3.b. An average or CW output power exceeding 10 W; *or*

d.4. A wavelength exceeding 1,400 nm and having any of the following:

d.4.a. An output energy exceeding 100 mJ per pulse and a pulsed ''peak power'' exceeding 1 W; *or*

d.4.b. An average or CW output power exceeding 1 W;

e. Components, as follows:

e.1. Mirrors cooled either by active cooling or by heat pipe cooling;

Technical Note: Active cooling is a cooling technique for optical components using flowing fluids within the subsurface (nominally less than 1 mm below the optical surface) of the optical component to remove heat from the optic.

e.2. Optical mirrors or transmissive or partially transmissive optical or electro-optical components specially designed for use with controlled ''lasers'';

f. Optical equipment, as follows:

(For shared aperture optical elements, capable of operating in ''Super-High Power Laser'' (''SHPL'') applications, see the U.S. Munitions List.)

1f.1. Dynamic wavefront (phase) measuring equipment capable of mapping at least 50 positions on a beam wavefront having any the following:

f.1.a. Frame rates equal to or more than 100 Hz and phase discrimination of at least 5% of the beam's wavelength; *or*

f.1.b. Frame rates equal to or more than 1,000 Hz and phase discrimination of at least 20% of the beam's wavelength; *or*

f.2. ''Laser'' diagnostic equipment capable of measuring ''SHPL'' system angular beam steering errors of equal to or less than 10 µrad;

f.3. Optical equipment and components specially designed for a phased-array ''SHPL'' system for coherent beam combination to an accuracy of lambda/10 at the designed wavelength, or 0.1 µm, whichever is the smaller;

f.4. Projection telescopes specially designed for use with ''SHPL'' systems.

6A007 Gravity meters (gravimeters) and gravity gradiometers, as follows (see List of Items Controlled).

* * * * *

List of Items Controlled

Unit: $ value

Related Controls: See also 6A107 and 6A997

Related Definitions: N/A

Items: a. Gravity meters designed or modified for ground use having a static accuracy of less (better) than 10 µgal;

Note: 6A007.a does not control ground gravity meters of the quartz element (Worden) type.

b. Gravity meters designed for mobile platforms for ground, marine, submersible, space or airborne use, having all of the following:

b.1. A static accuracy of less (better) than 0.7 mgal; *and*

b.2. An in-service (operational) accuracy of less (better) than 0.7 mgal having a time-to-steady-state registration of less than 2 minutes under any combination of attendant corrective compensations and motional influences;

c. Gravity gradiometers.

6A008 Radar systems, equipment and assemblies having any of the characteristics (see List of Items Controlled), and specially designed components therefor.

* * * * *

List of Items Controlled

Unit: $ value

Related Controls: See also 6A108 and 6A998. This entry does not control: (1) Secondary surveillance radar (SSR); (2) Car radar designed for collision prevention; (3) Displays or monitors used for Air Traffic Control (ATC) having no more than 12 resolvable elements per mm; (4) Meteorological (weather) radar.

Related Definitions: N/A

Items: a. Operating at frequencies from 40 GHz to 230 GHz and having an average output power exceeding 100 mW;

b. Having a tunable bandwidth exceeding ±6.25% of the center operating frequency;

Technical Note: The center operating frequency equals one half of the sum of the highest plus the lowest specified operating frequencies.

c. Capable of operating simultaneously on more than two carrier frequencies;

d. Capable of operating in synthetic aperture (SAR), inverse synthetic aperture (ISAR) radar mode, or sidelooking airborne (SLAR) radar mode;

e. Incorporating ''electronically steerable phased array antennae'';

f. Capable of heightfinding non-cooperative targets;

Note: 6A008.f does not control precision approach radar (PAR) equipment conforming to ICAO standards.

g. Specially designed for airborne (balloon or airframe mounted) operation and having Doppler ''signal processing'' for the detection of moving targets;

h. Employing processing of radar signals using any of the following:

h.1. ''Radar spread spectrum'' techniques; *or*

h.2. ''Radar frequency agility'' techniques;

i. Providing ground-based operation with a maximum ''instrumented range'' exceeding 185 km;

Note: 6A008.i does not control:

a. Fishing ground surveillance radar;

b. Ground radar equipment specially designed for enroute air traffic control, provided that all the following conditions are met:

1. It has a maximum ''instrumented range'' of 500 km or less;

2. It is configured so that radar target data can be transmitted only one way from the radar site to one or more civil ATC centers;

3. It contains no provisions for remote control of the radar scan rate from the enroute ATC center; *and*

4. It is to be permanently installed;

c. Weather balloon tracking radars.

j. Being ''laser'' radar or Light Detection and Ranging (LIDAR) equipment, having any of the following:

j.1. ''Space-qualified''; *or*

j.2. Employing coherent heterodyne or homodyne detection techniques and having an angular resolution of less (better) than 20 µr (microradians);

Note: 6A008.j does not control LIDAR equipment specially designed for surveying or for meteorological observation.

k. Having ''signal processing'' sub-systems using ''pulse compression'', with any of the following:

k.1. A ''pulse compression'' ratio exceeding 150; *or*

k.2. A pulse width of less than 200 ns; *or*

l. Having data processing sub-systems with any of the following:

l.1. ''Automatic target tracking'' providing, at any antenna rotation, the predicted target position beyond the time of the next antenna beam passage;

Note: 6A008.l.1 does not control conflict alert capability in ATC systems, or marine or harbor radar.

l.2. Calculation of target velocity from primary radar having non-periodic (variable) scanning rates;

l.3. Processing for automatic pattern recognition (feature extraction) and comparison with target characteristic data bases (waveforms or imagery) to identify or classify targets; *or*

l.4. Superposition and correlation, or fusion, of target data from two or more ''geographically dispersed'' and ''interconnected radar sensors'' to enhance and discriminate targets.

Note: 6A008.l.4 does not control systems, equipment and assemblies designed for marine traffic control.

6D001 ''Software'' specially designed for the ''development'' or ''production'' of equipment controlled by 6A004, 6A005, 6A008 or 6B008.

* * * * *

License Exceptions

CIV: N/A

TSR: Yes, except for the following:

(1) Items controlled for MT reasons; or

(2) Exports or reexports to destinations outside of Austria, Belgium, Canada, Denmark, Finland, France, Germany, Greece, Ireland, Italy, Japan, Luxembourg, the Netherlands, Portugal, Spain, Sweden, or the United Kingdom of ''software'' specially designed for the ''development'' or ''production'' of equipment controlled by 6A008.l.3 or 6B008.

* * * * *

6D003 Other ''software'', as follows (see List of Items Controlled).

* * * * *

License Exceptions

CIV: Yes for 6D003.h.1

TSR: Yes, except for the following:

(1) Items controlled for MT reasons; or

(2) Exports or reexports to destinations outside of Austria, Belgium, Canada, Denmark, Finland, France, Germany, Greece, Ireland, Italy, Japan, Luxembourg, the Netherlands, Portugal, Spain, Sweden, or the United Kingdom of ''software'' for items controlled by 6D003.a.

* * * * *

6E001 ''Technology'' according to the General Technology Note for the ''development'' of equipment, materials or ''software'' controlled by 6A (except 6A018, 6A991, 6A992, 6A994, 6A995, 6A996, 6A997, or 6A998), 6B (except 6B995), 6C (except 6C992 or 6C994), or 6D (except 6D991, 6D992, or 6D993.

* * * * *

License Exceptions

CIV: N/A

TSR: Yes, except for the following:

(1) Items controlled for MT reasons; or

(2) Exports or reexports to destinations outside of Austria, Belgium, Canada, Denmark, Finland, France, Germany, Greece, Ireland, Italy, Japan, Luxembourg, the Netherlands, Portugal, Spain, Sweden, or the United Kingdom of ''technology'' for the ''development'' of the following:

(a) Items controlled by 6A001.a.2.a.1, 6A001.a.2.a.2, 6A001.a.2.a.7, 6A001.a.2.b, 6A001.a.2.e.1, 6A001.a.2.e.2, 6A002.a.1.c, 6A008.l.3, 6B008, 6D003.a;

(b) Equipment controlled by 6A001.a.2.c or 6A001.a.2.e.3 when specially designed for real time applications; or

(c) ''Software'' controlled by 6D001 and specially designed for the ''development'' or ''production'' of equipment controlled by 6A008.l.3 or 6B008.

* * * * *

6E002 ''Technology'' according to the General Technology Note for the ''production'' of equipment or materials controlled by 6A (except 6A018, 6A991, 6A992, 6A994, 6A995, 6A996, 6A997 or 6A998), 6B (except 6B995) or 6C (except 6C992 or 6C994).

* * * * *

License Exceptions

CIV: N/A

TSR: Yes, except for the following:

(1) Items controlled for MT reasons; or

(2) Exports or reexports to destinations outside of Austria, Belgium, Canada, Denmark, Finland, France, Germany, Greece, Ireland, Italy, Japan, Luxembourg, the Netherlands, Portugal, Spain, Sweden, or the United Kingdom of ''technology'' for the ''development'' of the following:

(a) Items controlled by 6A001.a.2.a.1, 6A001.a.2.a.2, 6A001.a.2.a.7, 6A001.a.2.b, and 6A001.a.2.c; and

(b) Equipment controlled by 6A001.a.2.e when specially designed for real time applications; or

(c) ''Software'' controlled by 6D001 and specially designed for the ''development'' or ''production'' of equipment controlled by 6A002.a.1.c, 6A008.l.3 or 6B008.

* * * * *

10. In Supplement No. 1 to part 774 (the Commerce Control List), Category 7-Navigation and Avionics, Export Control Classification Number (ECCN) 7D003 is revised to read as follows:

7D003 Other ''software'', as follows (see List of Items Controlled).

License Requirements

Reason for Control: NS, MT, AT

Control(s)	*Country Chart*
NS applies to entire entry ..	NS Column 1
MT applies to entire entry	MT Column 1
AT applies to entire entry	AT Column 1

License Exceptions

CIV: N/A

TSR: N/A

List of Items Controlled

Unit: $ value

Related Controls: See also 7D103 and 7D994

Related Definitions: N/A

Items: a. ''Software'' specially designed or modified to improve the operational performance or reduce the navigational error of systems to the levels controlled by 7A003 or 7A004;

b. ''Source code'' for hybrid integrated systems that improves the operational performance or reduces the navigational error of systems to the level controlled by 7A003 by continuously combining inertial data with any of the following navigation data:

b.1. Doppler radar velocity;

b.2. Global navigation satellite systems (i.e., GPS or GLONASS) reference data; *or*

b.3. Terrain data from data bases;

c. ''Source code'' for integrated avionics or mission systems that combine sensor data and employ ''expert systems'';

d. ''Source code'' for the ''development'' of any of the following:

d.1. Digital flight management systems for ''total control of flight'';

d.2. Integrated propulsion and flight control systems;

d.3. Fly-by-wire or fly-by-light control systems;

d.4. Fault-tolerant or self-reconfiguring ''active flight control systems'';

d.5. Airborne automatic direction finding equipment;

d.6. Air data systems based on surface static data; *or*

d.7. Raster-type head-up displays or three dimensional displays;

e. Computer-aided-design (CAD) ''software'' specially designed for the ''development'' of ''active flight control systems'', helicopter multi-axis fly-by-wire or fly-by-light controllers or helicopter ''circulation controlled anti-torque or circulation-controlled direction control systems'' whose ''technology'' is controlled by 7E004.b, 7E004.c.1 or 7E004.c.2.

11. In Supplement No. 1 to part 774 (the Commerce Control List), Category 8—Marine, the following Export Control Classification Numbers (ECCNs) are amended:

a. By revising the List of Items Controlled section for ECCNs 8A002 and 8A992;

b. By revising the License Exceptions section for ECCNs 8D001 and 8E001, as follows:

8A002 Systems and equipment, as follows (see List of Items Controlled).

* * * * *

List of Items Controlled

Unit: Equipment in number

Related Controls: See also 8A992 and for underwater communications systems, see Category 5, Part I—Telecommunications).

Related Definitions: N/A

Items: a. Systems and equipment, specially designed or modified for submersible vehicles, designed to operate at depths exceeding 1,000 m, as follows:

a.1. Pressure housings or pressure hulls with a maximum inside chamber diameter exceeding 1.5 m;

a.2. Direct current propulsion motors or thrusters;

a.3. Umbilical cables, and connectors therefor, using optical fiber and having synthetic strength members;

b. Systems specially designed or modified for the automated control of the motion of submersible vehicles controlled by 8A001 using navigation data and having closed loop servo-controls:

b.1. Enabling a vehicle to move within 10 m of a predetermined point in the water column;

b.2. Maintaining the position of the vehicle within 10 m of a predetermined point in the water column; *or*

b.3. Maintaining the position of the vehicle within 10 m while following a cable on or under the seabed;

c. Fiber optic hull penetrators or connectors;

d. Underwater vision systems, as follows:

d.1. Television systems and television cameras, as follows:

d.1.a. Television systems (comprising camera, monitoring and signal transmission equipment) having a limiting resolution when measured in air of more than 800 lines and specially designed or modified for remote operation with a submersible vehicle;

d.1.b. Underwater television cameras having a limiting resolution when measured in air of more than 1,100 lines;

d.1.c. Low light level television cameras specially designed or modified for underwater use containing all of the following:

d.1.c.1. Image intensifier tubes controlled by 6A002.a.2.a; *and*

d.1.c.2. More than 150,000 ''active pixels'' per solid state area array;

Technical Note: Limiting resolution in television is a measure of horizontal resolution usually expressed in terms of the maximum number of lines per picture height discriminated on a test chart, using IEEE Standard 208/1960 or any equivalent standard.

d.2. Systems, specially designed or modified for remote operation with an underwater vehicle, employing techniques to minimize the effects of back scatter,

including range-gated illuminators or ''laser'' systems;

e. Photographic still cameras specially designed or modified for underwater use below 150 m having a film format of 35 mm or larger, and having any of the following:

e.1. Annotation of the film with data provided by a source external to the camera;

e.2. Automatic back focal distance correction; *or*

e.3. Automatic compensation control specially designed to permit an underwater camera housing to be usable at depths exceeding 1,000 m;

f. Electronic imaging systems, specially designed or modified for underwater use, capable of storing digitally more than 50 exposed images;

g. Light systems, as follows, specially designed or modified for underwater use:

g.1. Stroboscopic light systems capable of a light output energy of more than 300 J per flash and a flash rate of more than 5 flashes per second;

g.2. Argon arc light systems specially designed for use below 1,000 m;

h. ''Robots'' specially designed for underwater use, controlled by using a dedicated ''stored program controlled'' computer, having any of the following:

h.1. Systems that control the ''robot'' using information from sensors which measure force or torque applied to an external object, distance to an external object, or tactile sense between the ''robot'' and an external object; *or*

h.2. The ability to exert a force of 250 N or more or a torque of 250 Nm or more and using titanium based alloys or ''fibrous or filamentary'' ''composite'' materials in their structural members;

i. Remotely controlled articulated manipulators specially designed or modified for use with submersible vehicles, having any of the following:

i.1. Systems which control the manipulator using the information from sensors which measure the torque or force applied to an external object, or tactile sense between the manipulator and an external object; *or*

i.2. Controlled by proportional master-slave techniques or by using a dedicated ''stored program controlled'' computer, and having 5 degrees of freedom of movement or more;

Note: Only functions having proportional control using positional feedback or by using a dedicated ''stored program controlled'' computer are counted when determining the number of degrees of freedom of movement.

j. Air independent power systems, specially designed for underwater use, as follows:

j.1. Brayton or Rankine cycle engine air independent power systems having any of the following:

j.1.a. Chemical scrubber or absorber systems specially designed to remove carbon dioxide, carbon monoxide and particulates from recirculated engine exhaust;

j.1.b. Systems specially designed to use a monoatomic gas;

j.1.c. Devices or enclosures specially designed for underwater noise reduction in frequencies below 10 kHz, or special mounting devices for shock mitigation; *or*

j.1.d. Systems specially designed:

j.1.d.1. To pressurize the products of reaction or for fuel reformation;

j.1.d.2. To store the products of the reaction; *and*

j.1.d.3. To discharge the products of the reaction against a pressure of 100 kPa or more;

j.2. Diesel cycle engine air independent systems, having all of the following:

j.2.a. Chemical scrubber or absorber systems specially designed to remove carbon dioxide, carbon monoxide and particulates from recirculated engine exhaust;

j.2.b. Systems specially designed to use a monoatomic gas;

j.2.c. Devices or enclosures specially designed for underwater noise reduction in frequencies below 10 kHz or special mounting devices for shock mitigation; *and*

j.2.d. Specially designed exhaust systems that do not exhaust continuously the products of combustion;

j.3. Fuel cell air independent power systems with an output exceeding 2 kW having any of the following:

j.3.a. Devices or enclosures specially designed for underwater noise reduction in frequencies below 10 kHz or special mounting devices for shock mitigation; *or*

j.3.b. Systems specially designed:

j.3.b.1. To pressurize the products of reaction or for fuel reformation;

j.3.b.2. To store the products of the reaction; *and*

j.3.b.3. To discharge the products of the reaction against a pressure of 100 kPa or more;

j.4. Stirling cycle engine air independent power systems, having all of the following:

j.4.a. Devices or enclosures specially designed for underwater noise reduction in frequencies below 10 kHz or special mounting devices for shock mitigation; *and*

j.4.b. Specially designed exhaust systems which discharge the products of combustion against a pressure of 100 kPa or more;

k. Skirts, seals and fingers, having any of the following:

k.1. Designed for cushion pressures of 3,830 Pa or more, operating in a significant wave height of 1.25 m (Sea State 3) or more and specially designed for surface effect vehicles (fully skirted variety) controlled by 8A001.f; *or*

k.2. Designed for cushion pressures of 6,224 Pa or more, operating in a significant wave height of 3.25 m (Sea State 5) or more and specially designed for surface effect vehicles (rigid sidewalls) controlled by 8A001.g;

l. Lift fans rated at more than 400 kW specially designed for surface effect vehicles controlled by 8A001.f or 8A001.g;

m. Fully submerged subcavitating or supercavitating hydrofoils specially designed for vessels controlled by 8A001.h;

n. Active systems specially designed or modified to control automatically the sea-induced motion of vehicles or vessels controlled by 8A001.f, 8A001.g, 8A001.h or 8A001.i;

o. Propellers, power transmission systems, power generation systems and noise reduction systems, as follows:

o.1. Water-screw propeller or power transmission systems, as follows, specially designed for surface effect vehicles (fully skirted or rigid sidewall variety), hydrofoils or small waterplane area vessels controlled by 8A001.f, 8A001.g, .8A001.h or 8A001.i:

o.1.a. Supercavitating, super-ventilated, partially-submerged or surface piercing propellers rated at more than 7.5 MW;

o.1.b. Contrarotating propeller systems rated at more than 15 MW;

o.1.c. Systems employing pre-swirl or post-swirl techniques for smoothing the flow into a propeller;

o.1.d. Light-weight, high capacity (K factor exceeding 300) reduction gearing;

o.1.e. Power transmission shaft systems, incorporating ''composite'' material components, capable of transmitting more than 1 MW;

o.2. Water-screw propeller, power generation systems or transmission systems designed for use on vessels, as follows:

o.2.a. Controllable-pitch propellers and hub assemblies rated at more than 30 MW;

o.2.b. Internally liquid-cooled electric propulsion engines with a power output exceeding 2.5 MW;

o.2.c. ''Superconductive'' propulsion engines, or permanent magnet electric propulsion engines, with a power output exceeding 0.1 MW;

o.2.d. Power transmission shaft systems, incorporating ''composite'' material components, capable of transmitting more than 2 MW;

o.2.e. Ventilated or base-ventilated propeller systems rated at more than 2.5 MW;

o.3. Noise reduction systems designed for use on vessels of 1,000 tons displacement or more, as follows:

o.3.a. Systems that attenuate underwater noise at frequencies below 500 Hz and consist of compound acoustic mounts for the acoustic isolation of diesel engines, diesel generator sets, gas turbines, gas turbine generator sets, propulsion motors or propulsion reduction gears, specially designed for sound or vibration isolation, having an intermediate mass exceeding 30% of the equipment to be mounted;

o.3.b. Active noise reduction or cancellation systems, or magnetic bearings, specially designed for power transmission systems, and incorporating electronic control systems capable of actively reducing equipment vibration by the generation of anti-noise or anti-vibration signals directly to the source;

p. Pumpjet propulsion systems having a power output exceeding 2.5 MW using divergent nozzle and flow conditioning vane techniques to improve propulsive efficiency or reduce propulsion-generated underwater-radiated noise;

8A992 Underwater systems or equipment, not controlled by 8A002, and specially designed parts therefor.

* * * * *

List of Items Controlled

Unit: $ value

Related Controls: N/A

Related Definitions: N/A

Items: a. Underwater vision systems, as follows:

a.1. Television systems (comprising camera, lights, monitoring and signal

transmission equipment) having a limiting resolution when measured in air of more than 500 lines and specially designed or modified for remote operation with a submersible vehicle; *or*

a.2. Underwater television cameras having a limiting resolution when measured in air of more than 700 lines;

Technical Note: Limiting resolution in television is a measure of horizontal resolution usually expressed in terms of the maximum number of lines per picture height discriminated on a test chart, using IEEE Standard 208/1960 or any equivalent standard.

b. Photographic still cameras specially designed or modified for underwater use, having a film formate of 35 mm or larger, and having autofocussing or remote focussing specially designed for underwater use;

c. Stroboscopic light systems, specially designed or modified for underwater use, capable of a light output energy of more than 300 J per flash;

d. Other underwater camera equipment, n.e.s.;

e. Other submersible systems, n.e.s.;

f. Boats, n.e.s., including inflatable boats, and specially designed components therefor, n.e.s.;

g. Marine engines (both inboard and outboard) and submarine engines, n.e.s.; and specially designed parts therefor, n.e.s.;

h. Other self-contained underwater breathing apparatus (scuba gear) and related equipment, n.e.s.;

i. Life jackets, inflation cartridges, compasses, wetsuits, masks, fins, weight belts, and dive computers;

j. Underwater lights and propulsion equipment;

k. Air compressors and filtration systems specially designed for filling air cylinders.

8D001 ''Software'' specially designed or modified for the ''development'', ''production'' or ''use'' of equipment or materials controlled by 8A (except 8A018 or 8A992), 8B or 8C.

* * * * *

License Exceptions

CIV: N/A

TSR: Yes, except for the following:

(1) Items controlled for MT reasons; or

(2) Exports or reexports to destinations outside of Austria, Belgium, Canada, Denmark, Finland, France, Germany, Greece, Ireland, Italy, Japan, Luxembourg, the Netherlands, Portugal, Spain, Sweden, or the United Kingdom of ''software'' specially designed for the ''development'' or ''production'' of equipment controlled by 8A001.b, 8A001.d, or 8A002.o.3.b.

* * * * *

8E001 ''Technology'' according to the General Technology Note for the ''development'' or ''production'' of equipment or materials controlled by 8A (except 8A018 or 8A992), 8B or 8C.

* * * * *

License Exceptions

CIV: N/A

TSR: Yes, except for the following:

(1) Items controlled for MT reasons; or

(2) Exports or reexports to destinations outside of Austria, Belgium, Canada, Denmark, Finland, France, Germany, Greece, Ireland, Italy, Japan, Luxembourg, the Netherlands, Portugal, Spain, Sweden, or the United Kingdom of ''technology'' for items controlled by 8A001.b, 8A001.d or 8A002.o.3.b.

* * * * *

12. In Supplement No. 1 to part 774 (the Commerce Control List), Category 9—Propulsion Systems, Space Vehicles, and Related Equipment, is amended by removing the second entry for Export Control Classification Number (ECCN) 9A018.

Dated: February 24, 1999.

R. Roger Majak,

Assistant Secretary for Export Administration.

[FR Doc. 99–5107 Filed 3–4–99; 8:45 am]

BILLING CODE 3510–33–P

federal register

Friday
March 5, 1999

Part V

Corporation for National and Community Service

45 CFR Parts 1224 and 2508

Privacy Act of 1974; Implementation, Report of Altered Systems; Proposed Rule and Notice

CORPORATION FOR NATIONAL AND COMMUNITY SERVICE

45 CFR Parts 1224 and 2508

RIN 3045–AA22

Implementation of the Privacy Act of 1974

AGENCY: Corporation for National and Community Service.

ACTION: Proposed rule.

SUMMARY: The Corporation for National and Community Service (hereinafter the ''Corporation'') revises its regulations under the Privacy Act. The Corporation seeks to redesignate its existing regulations under former ACTION's CFR chapter as updated regulations under the Corporation's CFR chapter. The Corporation expects this proposed rule will promote consistency in its processing of Privacy Act requests by setting forth the basic policies of the Corporation governing the maintenance of its system of records which contains the personal information of its employees.

DATES: Comments must be received by the Corporation no later than April 5, 1999.

ADDRESSES: Comments may be mailed to the Corporation for National and Community Service, Office of General Counsel, Attn: Bill Hudson, Corporation Privacy Act Officer, Room 8200, 1201 New York Avenue, NW, Washington, DC 20525.

FOR FURTHER INFORMATION CONTACT: Bill Hudson, Corporation Privacy Act Officer, at (202) 606–5000, ext. 265.

SUPPLEMENTARY INFORMATION: The Corporation is a wholly-owned government corporation created by Congress to administer programs established under the national service laws. The Corporation operates under two statutes, the National and Community Service Act of 1990, as amended, 42 U.S.C. 12501 *et seq.*, and the Domestic Volunteer Service Act of 1973, as amended, 42 U.S.C. 4950 *et seq*.

The functions of the ACTION agency were transferred to the Corporation on April 4, 1994. This proposed Privacy Act rule redesignates ACTION's policy at 45 CFR Chapter XII, part 1224, to be revised as 45 CFR Chapter XXV, part 2508, and governs the Corporation as a whole. The Distribution Table in the Preamble compares the earlier version of CFR part numbers under 45 Chapter XII, part 1224, with the new CFR part numbers assigned under 45 Chapter XXV, part 2508. The subjects listed in 45 CFR Chapter XII, part 1224, are revised and redesignated under 45 CFR Chapter XXV, part 2508, to reflect the new subject listings. The redesignated subpart numbers under 45 CFR Chapter XXV, part 2508, are written in a plain language format as questions/answers to provide for a better understanding of the Corporation's revised Privacy Act regulation.

Regulatory Flexibility Act

I certify that this regulation will not have a significant economic impact on a substantial number of small entities.

Executive Order 12866

This regulation has been drafted and reviewed in accordance with Executive Order 12866. The Office of Management and Budget has reviewed this rule and has determined that this rule is not a ''significant regulatory action'' under Executive Order 12866, section 3(f), Regulatory Planning and Review.

Paperwork Reduction Act

I certify that this regulation does not require additional reporting under the criteria of the Paperwork Reduction Act of 1980.

Unfunded Mandates Reform Act of 1995

This regulation will not result in the expenditure by State, local, and tribal governments, in the aggregate, or by the private sector, of $100,000,000 or more in any one year, and it will not significantly or uniquely affect small governments. Therefore, no actions are deemed necessary under the provisions of the Unfunded Mandates Reform Act of 1995.

Small Business Regulatory Enforcement Fairness Act of 1996

This rule is not a major rule as defined by section 804 of the Small Business Regulatory Enforcement Fairness Act of 1996. This rule will not result in an annual effect on the economy of $100,000,000 or more; a major increase in costs or prices; or significant adverse effects on competition, employment, investment, productivity, innovation, or on the ability of United States-based companies to compete with foreign-based companies in domestic and export markets.

Submission to Congress and the Office of Management and Budget

This proposed rule is hereby submitted pursuant to 5 U.S.C. 552a(f) for printing in the **Federal Register**. A copy has been sent to the Chairman of the Committee on Government Reform and Oversight of the House of Representatives; the Chairman of the Committee on Governmental Affairs of the Senate; and the Administrator, Office of Information and Regulatory Affairs, Office of Management and Budget, in accordance with 5 U.S.C. 552a(e)(4) and (a)(r).

DISTRIBUTION TABLE

Old 45 CFR Part 1224	New 45 CFR Part 2508
1224.1–1	2508.2
1224.1–2	2508.3
1224.1–3	2508.1
1224.1–4	2508.4
1224.1–5	2508.5
1224.1–5a	2505.6
1224.1–6	2508.7
1224.1–7	None
1224.1–8	2508.8
1224.1–9	2508.9
1224.1–10	2508.10
1224.1–11	2508.11
1224.1–12	2508.12
1224.1–13	2508.13
1224.1–14	2508.19
1224.1–15	2508.14
1224.1–16	2508.15
1224.1–17	2508.16
1224.1–18	2508.17
1224.1–19	None
None	2508.18
None	2508.20

List of Subjects in 45 CFR Parts 1224 and 2508

Privacy.

Accordingly, and under the authority of 42 U.S.C. 12501 *et seq.*, and 42 U.S.C. 4950 *et seq.*, the Corporation proposes to amend 45 CFR chapters XII and XXV as follows:

PART 1224—[REDESIGNATED AS PART 2508]

1. Part 1224 in 45 CFR chapter XII is redesignated as part 2508 in 45 CFR chapter XXV and is revised to read as follows:

PART 2508—IMPLEMENTATION OF THE PRIVACY ACT OF 1974

Sec.

2508.1 Definitions.
2508.2 What is the purpose of this part?
2508.3 What is the Corporation's Privacy Act policy?
2508.4 When can Corporation records be disclosed?
2508.5 When does the Corporation publish its notice of its system of records?
2508.6 When will the Corporation publish a notice for new routine uses of information in its system of records?
2508.7 To Whom does the Corporation provide reports to regarding changes in its system of records?
2508.8 Who is responsible for establishing the Corporation's rules of conduct for Privacy Act compliance?

2508.9 What officials are responsible for the security, management and control of Corporation record keeping systems?
2508.10 Who has the responsibility for maintaining adequate technical, physical, and security safeguards to prevent unauthorized disclosure or destruction of manual and automatic record systems?
2508.11 How shall offices maintaining a system of records be accountable for those records to prevent unauthorized disclosure of information?
2508.12 What are the contents of the systems of records that are to be maintained by the Corporation?
2508.13 What are the procedures for acquiring access to Corporation records by an individual about whom a record is maintained?
2508.14 What are the identification requirements for individuals who request access to records?
2508.15 What are the procedures for requesting inspection of, amendment or correction to, or appeal of an individual's records maintained by the Corporation other than that individual's official personnel file?
2508.16 What are the procedures for filing an appeal for refusal to amend or correct records?
2508.17 When shall fees be charged and at what rate?
2508.18 What are the penalties for obtaining a record under false pretenses?
2508.19 What Privacy Act exemptions or control of systems of records are exempt from disclosure?
2508.20 What are the restrictions regarding the release of mailing lists?

Authority: 5 U.S.C. 552a; 42 U.S.C. 12501 *et seq;* 42 U.S.C. 4950 *et seq.*

§ 2508.1 Definitions

(a) *Amend* means to make a correction to, or expunge any portion of, a record about an individual which that individual believes is not accurate, relevant, timely, or complete.

(b) *Appeal Officer* means the individual delegated the responsibility to act on all appeals filed under the Privacy Act.

(c) *Chief Executive Officer* means the Head of the Corporation.

(d) *Corporation* means the Corporation for National and Community Service.

(e) *Individual* means any citizen of the United States or an alien lawfully admitted for permanent residence.

(f) *Maintain* means to collect, use, store, disseminate or any combination of these record-keeping functions; exercise of control over and therefore, responsibility and accountability for, systems of records.

(g) *Personnel record* means any information about an individual that is maintained in a system of records by the Corporation that is needed for personnel management or processes such as staffing, employment development, retirement, grievances, and appeals.

(h) *Privacy Act Officer* means the individual delegated the authority to allow access to, the release of, or the withholding of records pursuant to an official Privacy Act request. The Privacy Act Officer is further delegated the authority to make the initial determination on all requests to amend records.

(i) *Record* means any document or other information about an individual maintained by the agency whether collected or grouped, and including, but not limited to, information regarding education, financial transactions, medical history, criminal or employment history, or any other personal information that contains the name or other personal identification number, symbol, etc. assigned to such individual.

(j) *Routine use* means, with respect to the disclosure of a record, the use of such record for a purpose which is compatible with the purpose for which it was collected.

(k) *System of records* means a group of any records under the maintenance and control of the Corporation from which information is retrieved by use of the name of an individual or by some personal identifier of the individual.

§ 2508.2 What is the purpose of this part?

The purpose of this part is to set forth the basic policies of the Corporation governing the maintenance of its system of records which contains personal information concerning its employees as defined in the Privacy Act (5 U.S.C. 552a). Records included in this part are those described in aforesaid act and maintained by the Corporation and/or any component thereof.

§ 2508.3 What is the Corporation's Privacy Act policy?

It is the policy of the Corporation to protect, preserve, and defend the right of privacy of any individual about whom the Corporation maintains personal information in any system of records and to provide appropriate and complete access to such records including adequate opportunity to correct any errors in said records. Further, it is the policy of the Corporation to maintain its records in such a manner that the information contained therein is, and remains material and relevant to the purposes for which it is received in order to maintain its records with fairness to the individuals who are the subjects of such records.

§ 2508.4 When can Corporation records be disclosed?

(a) (1) The Corporation will not disclose any record that is contained in its system of records by any means of communication to any person, or to another agency, except pursuant to a written request by, or with the prior written consent of the individual to whom the record pertains, unless disclosure of the record would be:

(i) To employees of the Corporation who maintain the record and who have a need for the record in the performance of their official duties;

(ii) When required under the provisions of the Freedom of Information Act (5 U.S.C. 552);

(iii) For routine uses as appropriately published in the annual notice of the **Federal Register**;

(iv) To the Bureau of the Census for purposes of planning or carrying out a census or survey or related activity pursuant to the provisions of title 13;

(v) To a recipient who has provided the Corporation with advance adequate written assurance that the record will be used solely as a statistical research or reporting record, and the record is to be transferred in a form that is not individually identifiable;

(vi) To the National Archives and Records Administration of the United States as a record which has sufficient historical or other value to warrant its continued preservation by the United States Government, or for evaluation by the Archivist of the United States or the designee of the Archivist to determine whether the record has such value;

(vii) To another agency or to an instrumentality of any governmental jurisdiction within or under the control of the United States for civil or criminal law enforcement activity if the activity is authorized by law, and if the head of the agency or instrumentality has made a written request to the Corporation for such records specifying the particular portion desired and the law enforcement activity for which the record is sought. Such a record may also be disclosed by the Corporation to the law enforcement agency on its own initiative in situations in which criminal conduct is suspected provided that such disclosure has been established as a routine use or in situations in which the misconduct is directly related to the purpose for which the record is maintained;

(viii) To a person pursuant to a showing of compelling circumstances affecting the health or safety of any individual if, upon such disclosure, notification is transmitted to the last known address of such individual;

(ix) To either House of Congress, or, to the extent of matter within its jurisdiction, any committee or subcommittee thereof, any joint committee of Congress or subcommittee of any such joint committee;

(x) To the Comptroller General or any of his or her authorized representatives, in the course of the performance of official duties in the General Accounting Office;

(xi) Pursuant to an order of a court of competent jurisdiction served upon the Corporation pursuant to 45 CFR 1201.3, and provided that if any such record is disclosed under such compulsory legal process and subsequently made public by the court which issued it, the Corporation must make a reasonable effort to notify the individual to whom the record pertains of such disclosure;

(xii) To a contractor, expert, or consultant of the Corporation (or an office within the Corporation) when the purpose of the release to perform a survey, audit, or other review of the Corporation's procedures and operations; and

(xiii) To a consumer reporting agency in accordance with section 3711(f) of title 31.

§ 2508.5 When does the Corporation publish its notice of its system of records?

The Corporation shall publish annually a notice of its system of records maintained by it as defined herein in the format prescribed by the General Services Administration in the **Federal Register**; provided, however, that such publication shall not be made for those systems of records maintained by other agencies while in the temporary custody of the Corporation.

§ 2508.6 When will the Corporation publish a notice for new routine uses of information in its system of records?

At least 30 days prior to publication of information under the preceding section, the Corporation shall publish in the **Federal Register** a notice of its intention to establish any new routine use of any system of records maintained by it with an opportunity for public comments on such use. Such notice shall contain the following:

(a) The name of the system of records for which the routine use is to be established.

(b) The authority for the system.

(c) The purpose for which the record is to be maintained.

(d) The proposed routine use(s).

(e) The purpose of the routine use(s).

(f) The categories of recipients of such use. In the event of any request for an addition to the routine uses of the systems which the Corporation maintains, such request may be sent to the following office: Corporation for National and Community Service, Director, Administration and Management Services, Room 6100, 1201 New York Avenue, NW, Washington, DC 20525.

§ 2508.7 To whom does the Corporation provide reports regarding changes in its system of records?

The Corporation shall provide to the Committee on Government Operations of the House of Representatives, the Committee on Governmental Affairs of the Senate, and the Office of Management and Budget, advance notice of any proposal to establish or alter any system of records as defined herein. This report will be submitted in accordance with guidelines provided by the Office of Management and Budget.

§ 2508.8 Who is responsible for establishing the Corporation's rules of conduct for Privacy Act compliance?

(a) The Chief Executive Officer shall ensure that all persons involved in the design, development, operation or maintenance of any system of records as defined herein are informed of all requirements necessary to protect the privacy of individuals who are the subject of such records. All employees shall be informed of all implications of the Act in this area including the civil remedies provided under 5 U.S.C. 552a(g)(1) and the fact that the Corporation may be subject to civil remedies for failure to comply with the provisions of the Privacy Act and this regulation.

(b) The Chief Executive Officer shall also ensure that all personnel having access to records receive adequate training in the protection of the security of personal records, and that adequate and proper storage is provided for all such records with sufficient security to assure the privacy of such records.

§ 2508.9 What officials are responsible for the security, management and control of Corporation record keeping systems?

(a) The Director of Administration and Management Services shall have overall control and supervision of the security of all systems of records and shall be responsible for monitoring the security standards set forth in this regulation.

(b) A designated official (System Manager) shall be named who shall have management responsibility for each record system maintained by the Corporation and who shall be responsible for providing protection and accountability for such records at all times and for insuring that such records are secured in appropriate containers whenever not in use or in the direct control of authorized personnel.

§ 2508.10 Who has the responsibility for maintaining adequate technical, physical, and security safeguards to prevent unauthorized disclosure or destruction of manual and automatic record systems?

The Chief Executive Officer has the responsibility of maintaining adequate technical, physical, and security safeguards to prevent unauthorized disclosure or destruction of manual and automatic record systems. These security safeguards shall apply to all systems in which identifiable personal data are processed or maintained, including all reports and outputs from such systems that contain identifiable personal information. Such safeguards must be sufficient to prevent negligent, accidental, or unintentional disclosure, modification or destruction of any personal records or data, and must furthermore minimize, to the extent practicable, the risk that skilled technicians or knowledgeable persons could improperly obtain access to modify or destroy such records or data and shall further insure against such casual entry by unskilled persons without official reasons for access to such records or data.

(a) *Manual systems.* (1) Records contained in a system of records as defined herein may be used, held or stored only where facilities are adequate to prevent unauthorized access by persons within or outside the Corporation.

(2) All records, when not under the personal control of the employees authorized to use the records, must be stored in a locked metal filing cabinet. Some systems of records are not of a such confidential nature that their disclosure would constitute a harm to an individual who is the subject of such record. However, records in this category shall also be maintained in locked metal filing cabinets or maintained in a secured room with a locking door.

(3) Access to and use of a system of records shall be permitted only to persons whose duties require such access within the Corporation, for routine uses as defined in § 2508.4 as to any given system, or for such other uses as may be provided herein.

(4) Other than for access within the Corporation to persons needing such records in the performance of their official duties or routine uses as defined in § 2508.4, or such other uses as provided herein, access to records within a system of records shall be permitted only to the individual to whom the record pertains or upon his

or her written request to the Director, Administration and Management Services.

(5) Access to areas where a system of records is stored will be limited to those persons whose duties require work in such areas. There shall be an accounting of the removal of any records from such storage areas utilizing a written log, as directed by the Director, Administration and Management Services. The written log shall be maintained at all times.

(6) The Corporation shall ensure that all persons whose duties require access to and use of records contained in a system of records are adequately trained to protect the security and privacy of such records.

(7) The disposal and destruction of records within a system of records shall be in accordance with rules promulgated by the General Services Administration.

(b) *Automated systems.* (1) Identifiable personal information may be processed, stored or maintained by automatic data systems only where facilities or conditions are adequate to prevent unauthorized access to such system in any form. Whenever such data, whether contained in punch cards, magnetic tapes or discs, are not under the personal control of an authorized person, such information must be stored in a locked or secured room, or in such other facility having greater safeguards than those provided for herein.

(2) Access to and use of identifiable personal data associated with automated data systems shall be limited to those persons whose duties require such access. Proper control of personal data in any form associated with automated data systems shall be maintained at all times, including maintenance of accountability records showing disposition of input and output documents.

(3) All persons whose duties require access to processing and maintenance of identifiable personal data and automated systems shall be adequately trained in the security and privacy of personal data.

(4) The disposal and disposition of identifiable personal data and automated systems shall be done by shredding, burning or in the case of tapes or discs, degaussing, in accordance with any regulations now or hereafter proposed by the General Services Administration or other appropriate authority.

§ 2508.11 How shall offices maintaining a system of records be accountable for those records to prevent unauthorized disclosure of information?

(a) Each office maintaining a system of records shall account for all records within such system by maintaining a written log in the form prescribed by the Director, Administration and Management Services, containing the following information:

(1) The date, nature, and purpose of each disclosure of a record to any person or to another agency. Disclosures made to employees of the Corporation in the normal course of their duties, or pursuant to the provisions of the Freedom of Information Act, need not be accounted for.

(2) Such accounting shall contain the name and address of the person or agency to whom the disclosure was made.

(3) The accounting shall be maintained in accordance with a system of records approved by the Director, Administration and Management Services, as sufficient for the purpose but in any event sufficient to permit the construction of a listing of all disclosures at appropriate periodic intervals.

(4) The accounting shall reference any justification or basis upon which any release was made including any written documentation required when records are released for statistical or law enforcement purposes under the provisions of subsection (b) of the Privacy Act of 1974 (5 U.S.C. 552a).

(5) For the purpose of this part, the system of accounting for disclosures is not a system of records under the definitions hereof, and need not be maintained within a system of records.

(6) Any subject individual may request access to an accounting of disclosures of a record. The subject individual shall make a request for access to an accounting in accordance with § 2508.13. An individual will be granted access to an accounting of the disclosures of a record in accordance with the procedures of this subpart which govern access to the related record. Access to an accounting of a disclosure of a record made under § 2508.13 may be granted at the discretion of the Director, Administration and Management Services.

§ 2508.12 What are the contents of the systems of record that are to be maintained by the Corporation?

(a) The Corporation shall maintain all records that are used in making determinations about any individual with such accuracy, relevance, timeliness, and completeness as is reasonably necessary to assure fairness to the individual in the determination;

(b) In situations in which the information may result in adverse determinations about such individual's rights, benefits and privileges under any Federal program, all information placed in a system of records shall, to the greatest extent practicable, be collected from the individual to whom the record pertains.

(c) Each form or other document that an individual is expected to complete in order to provide information for any system of records shall have appended thereto, or in the body of the document:

(1) An indication of the authority authorizing the solicitation of the information and whether the provision of the information is mandatory or voluntary.

(2) The purpose or purposes for which the information is intended to be used.

(3) Routine uses which may be made of the information and published pursuant to § 2508.6.

(4) The effect on the individual, if any, of not providing all or part of the required or requested information.

(d) Records maintained in any system of records used by the Corporation to make any determination about any individual shall be maintained with such accuracy, relevancy, timeliness, and completeness as is reasonably necessary to assure fairness to the individual in the making of any determination about such individual, provided however, that the Corporation shall not be required to update or keep current retired records.

(e) Before disseminating any record about any individual to any person other than an employee in the Corporation, unless the dissemination is made pursuant to the provisions of the Freedom of Information Act (5 U.S.C. 552), the Corporation shall make reasonable efforts to ensure that such records are, or were at the time they were collected, accurate, complete, timely and relevant for Corporation purposes.

(f) Under no circumstances shall the Corporation maintain any record about any individual with respect to or describing how such individual exercises rights guaranteed by the First Amendment of the Constitution of the United States, unless expressly authorized by statute or by the individual about whom the record is maintained, or unless pertinent to and within the scope of an authorized law enforcement activity.

(g) In the event any record is disclosed as a result of the order of a court of appropriate jurisdiction, the

Corporation shall make reasonable efforts to notify the individual whose record was so disclosed after the process becomes a matter of public record.

§ 2508.13 What are the procedures for acquiring access to Corporation records by an individual about whom a record is maintained?

(a) Any request for access to records from any individual about whom a record is maintained will be addressed to the Corporation for National and Community Service, Office of the General Counsel, Attn: Privacy Act Officer, Room 8200, 1201 New York Avenue, NW, Washington, DC 20525, or delivered in person during regular business hours, whereupon access to his or her record, or to any information contained therein, if determined to be releasable, shall be provided.

(b) If the request is made in person, such individual may, upon his or her request, be accompanied by a person of his or her choosing to review the record and shall be provided an opportunity to have a copy made of any record about such individual.

(c) A record may be disclosed to a representative chosen by the individual as to whom a record is maintained upon the proper written consent of such individual.

(d) A request made in person will be promptly complied with if the records sought are in the immediate custody of the Corporation. Mailed requests or personal requests for documents in storage or otherwise not immediately available, will be acknowledged within 10 working days, and the information requested will be promptly provided thereafter.

(e) With regard to any request for disclosure of a record, the following procedures shall apply:

(1) Medical or psychological records shall be disclosed to an individual unless, in the judgment of the Corporation, access to such records might have an adverse effect upon such individual. When such determination has been made, the Corporation may require that the information be disclosed only to a physician chosen by the requesting individual. Such physician shall have full authority to disclose all or any portion of such record to the requesting individual in the exercise of his or her professional judgment.

(2) Test material and copies of certificates or other lists of eligibles or any other listing, the disclosure of which would violate the privacy of any other individual, or be otherwise exempted by the provisions of the Privacy Act, shall be removed from the record before disclosure to any individual to whom the record pertains.

§ 2508.14 What are the identification requirements for individuals who request access to records?

The Corporation shall require reasonable identification of all individuals who request access to records to ensure that records are disclosed to the proper person.

(a) In the event an individual requests disclosure in person, such individual shall be required to show an identification card such as a drivers license, etc., containing a photo and a sample signature of such individual. Such individual may also be required to sign a statement under oath as to his or her identity, acknowledging that he or she is aware of the penalties for improper disclosure under the provisions of the Privacy Act.

(b) In the event that disclosure is requested by mail, the Corporation may request such information as may be necessary to reasonably ensure that the individual making such request is properly identified. In certain cases, the Corporation may require that a mail request be notarized with an indication that the notary received an acknowledgment of identity from the individual making such request.

(c) In the event an individual is unable to provide suitable documentation or identification, the Corporation may require a signed notarized statement asserting the identity of the individual and stipulating that the individual understands that knowingly or willfully seeking or obtaining access to records about another person under false pretenses is punishable by a fine of up to $5,000.

(d) In the event a requestor wishes to be accompanied by another person while reviewing his or her records, the Corporation may require a written statement authorizing discussion of his or her records in the presence of the accompanying representative or other persons.

§ 2508.15 What are the procedures for requesting inspection of, amendment or correction to, or appeal of an individual's records maintained by the Corporation other than that individual's official personnel file?

(a) A request for inspection of any record shall be made to the Director, Administration and Management Services. Such request may be made by mail or in person provided, however, that requests made in person may be required to be made upon a form provided by the Director of Administration and Management Services who shall keep a current list of all systems of records maintained by the Corporation and published in accordance with the provisions of this regulation. However, the request need not be in writing if the individual makes his or her request in person. The requesting individual may request that the Corporation compile all records pertaining to such individual at any named Service Center/State Office, AmeriCorps*NCCC Campus, or at Corporation Headquarters in Washington, DC, for the individual's inspection and/or copying. In the event an individual makes such request for a compilation of all records pertaining to him or her in various locations, appropriate time for such compilation shall be provided as may be necessary to promptly comply with such requests.

(b) Any such requests should contain, at a minimum, identifying information needed to locate any given record and a brief description of the item or items of information required in the event the individual wishes to see less than all records maintained about him or her.

(1) In the event an individual, after examination of his or her record, desires to request an amendment or correction of such records, the request must be submitted in writing and addressed to the Corporation for National and Community Service, Office of the General Counsel, Attn: Privacy Act Officer, Room 8200, 1201 New York Avenue, NW, Washington, DC 20525. In his or her written request, the individual shall specify:

(i) The system of records from which the record is retrieved;

(ii) The particular record that he or she is seeking to amend or correct;

(iii) Whether he or she is seeking an addition to or a deletion or substitution of the record; and,

(iv) His or her reasons for requesting amendment or correction of the record.

(2) A request for amendment or correction of a record will be acknowledged within 10 working days of its receipt unless the request can be processed and the individual informed of the Privacy Act Officer's decision on the request within that 10 day period.

(3) If the Privacy Act Officer agrees that the record is not accurate, timely, or complete, based on a preponderance of the evidence, the record will be corrected or amended. The record will be deleted without regard to its accuracy, if the record is not relevant or necessary to accomplish the Corporation's function for which the record was provided or is maintained. In either case, the individual will be informed in writing of the amendment, correction, or deletion and, if

accounting was made of prior disclosures of the record, all previous recipients of the record will be informed of the corrective action taken.

(4) If the Privacy Act Officer does not agree that the record should be amended or corrected, the individual will be informed in writing of the refusal to amend or correct the record. He or she will also be informed that he or she may appeal the refusal to amend or correct his or her record in accordance with § 2508.17.

(5) Requests to amend or correct a record governed by the regulation of another government agency will be forwarded to such government agency for processing and the individual will be informed in writing of the referral.

(c) In the event an individual disagrees with the Privacy Act Officer's initial determination, he or she may appeal such determination to the Appeal Officer in accordance with § 2508.17. Such request for review must be made within 30 days after receipt by the requestor of the initial refusal to amend.

§ 2508.16 What are the procedures for filing an appeal for refusal to amend or correct records?

(a) In the event an individual desires to appeal any refusal to correct or amend records, he or she may do so by addressing, in writing, such appeal to the Corporation for National and Community Service, Office of the Chief Operating Officer, Attn: Appeal Officer, 1201 New York Avenue NW, Washington, DC 20525. Although there is no time limit for such appeals, the Corporation shall be under no obligation to maintain copies of original requests or responses thereto beyond 180 days from the date of the original request.

(b) An appeal will be completed within 30 working days from its receipt by the Appeal Officer; except that, the appeal authority may, for good cause, extend this period for an additional 30 days. Should the appeal period be extended, the individual appealing the original refusal will be informed in writing of the extension and the circumstances of the delay. The individual's request for access to or to amend or correct the record, the Privacy Act Officer's refusal to amend or correct the record, and any other pertinent material relating to the appeal will be reviewed. No hearing will be held.

(c) If the Appeal Officer determines that the record that is the subject of the appeal should be amended or corrected, the record will be amended or corrected and the individual will be informed in writing of the amendment or correction. Where an accounting was made of prior disclosures of the record, all previous recipients of the record will be informed of the corrective action taken.

(d) If the appeal is denied, the subject individual will be informed in writing:

(1) Of the denial and reasons for the denial;

(2) That he or she has a right to seek judicial review of the denial; and

(3) That he or she may submit to the Appeal Officer a concise statement of disagreement to be associated with the disputed record and disclosed whenever the record is disclosed.

(e) Whenever an individual submits a statement of disagreement to the Appeal Officer in accordance with paragraph (d)(3) of this section, the record will be annotated to indicate that it is disputed. In any subsequent disclosure, a copy of the subject individual's statement of disagreement will be disclosed with the record. If the appeal authority deems it appropriate, a concise statement of the Appeal Officer's reasons for denying the individual's appeal may also be disclosed with the record. While the individual will have access to this statement of reasons, such statement will not be subject to correction or amendment. Where an accounting was made of prior disclosures of the record, all previous recipients of the record will be provided a copy of the individual's statement of disagreement, as well as the statement, if any, of the Appeal Officer's reasons for denying the individual's appeal.

§ 2508.17 When shall fees be charged and at what rate?

(a) No fees shall be charged for search time or for any other time expended by the Corporation to review or produce a record except where an individual requests that a copy be made of the record to which he or she is granted access. Where a copy of the record must be made in order to provide access to the record (e.g., computer printout where no screen reading is available), the copy will be made available to the individual without cost.

(b) The applicable fee schedule is as follows:

(1) Each copy of each page, up to 8 ½'' x 14'', made by photocopy or similar process is $0.10 per page.

(2) Each copy of each microform frame printed on paper is $0.25.

(3) Each aperture card is $0.25.

(4) Each 105-mm fiche is $0.25.

(5) Each 100' foot role of 35-mm microfilm is $7.00.

(6) Each 100' foot role of 16-mm microfilm is $6.00.

(7) Each page of computer printout without regard to the number of carbon copies concurrently printed is $0.20.

(8) Copying records not susceptible to photocopying (e.g., punch cards or magnetic tapes), at actual cost to be determined on a case-by-case basis.

(9) Other copying forms (e.g., typing or printing) will be charged at direct costs, including personnel and equipment costs.

(c) All copying fees shall be paid by the individual before the copying will be undertaken. Payments shall be made by check or money order payable to the ''Corporation for National and Community Service,'' and provided to the Privacy Act Officer processing the request.

(d) A copying fee shall not be charged or collected, or alternatively, it may be reduced, when it is determined by the Privacy Act Officer, based on a petition, that the petitioning individual is indigent and that the Corporation's resources permit a waiver of all or part of the fee. An individual is deemed to be indigent when he or she is without income or lacks the resources sufficient to pay the fees.

(e) Special and additional services provided at the request of the individual, such as certification or authentication, postal insurance and special mailing arrangement costs, will be charged to the individual.

(f) A copying fee totaling $5.00 or less shall be waived, but the copying fees for contemporaneous requests by the same individual shall be aggregated to determine the total fee.

§ 2508.18 What are the penalties for obtaining a record under false pretenses?

The Privacy Act provides, in pertinent part that:

(a) Any person who knowingly and willfully requests to obtain any record concerning an individual from the Corporation under false pretenses shall be guilty of a misdemeanor and fined not more than $5,000 (5 U.S.C. 552a(I)(3)).

(b) A person who falsely or fraudulently attempts to obtain records under the Privacy Act also may be subject to prosecution under such other criminal statutes as 18 U.S.C. 494, 495 and 1001.

§ 2508.19 What Privacy Act exemptions or control of systems of records are exempt from disclosure?

(a) Certain systems of records that are maintained by the Corporation are exempted from provisions of the Privacy Act in accordance with exemptions (j) and (k) of 5 U.S.C. 552a.

(1) Exemption of Inspector General system of records. Pursuant to, and limited by 5 U.S.C. 552a(j)(2), the system of records maintained by the

Office of the Inspector General that contains the Investigative Files shall be exempted from the provisions of 5 U.S.C. 552a, except subsections (b), (c)(1) and (2), (e)(4)(A) through (F), (e)(6)(7), (9), (10), and (11), and (I), and 45 CFR 2508.11, 2508.12, 2508.13, 2508.14, 2508.15, 2508.16, and 2508.17, insofar as the system contains information pertaining to criminal law enforcement investigations.

(2) Pursuant to, and limited by 5 U.S.C. 552a(k)(2), the system of records maintained by the Office of the Inspector General that contains the Investigative Files shall be exempted from 5 U.S.C. 552a (c)(3), (d), (e)(1), (e)(4) (G), (H), and (I), and (f), and 45 CFR 2508.11, 2508.12, 2508.13, 2508.14, 2508.15, 2508.16, and 2508.17, insofar as the system contains investigatory materials compiled for law enforcement purposes.

(b) Exemptions to the General Counsel system of records. Pursuant to, and limited by 5 U.S.C. 552a(d)(5), the system of records maintained by the Office of the General Counsel that contains the Legal Office Litigation/Correspondence Files shall be exempted from the provisions of 5 U.S.C. 552a(d)(5), and 45 CFR 2508.4, insofar as the system contains information compiled in reasonable anticipation of a civil action or proceeding.

§ 2508.20 What are the restrictions regarding the release of mailing lists?

An individual's name and address may not be sold or rented by the Corporation unless such action is specifically authorized by law. This section does not require the withholding of names and addresses otherwise permitted to be made public.

Dated: February 25, 1999.

Thomas L. Bryant,

Acting General Counsel.

[FR Doc. 99–5141 Filed 3–4–99; 8:45 am]

BILLING CODE 6050–28–P

CORPORATION FOR NATIONAL AND COMMUNITY SERVICE

Privacy Act of 1974; Report of Altered Systems

AGENCY: Corporation for National and Community Service.

ACTION: Notice of altered system of records.

SUMMARY: Notice is hereby given that in accordance with the Privacy Act of 1974, 5 U.S.C. 552a(e)(4) (''the Act''), the Corporation for National and Community Service hereby publishes a notice of its altered system of records due to significant changes to the current system of records as set forth below. This notice, published by the Corporation, officially excludes its predecessor, the ACTION agency, from its systems of records because ACTION was abolished on April 4, 1994, and its system of records were officially transferred to the Corporation. Title 5 U.S.C. 552a(e) (4) and (11) provide that the public be given a 30-day period in which to comment on the altered system of records. The Office of Management and Budget (OMB), which has oversight responsibilities under the Privacy Act, requires a 40-day period in which to conclude its review of the proposed altered system of records. In accordance with 5 U.S.C. 552a(r), the Corporation has provided a report to OMB and the Congress on the proposed altered system of records.

EFFECTIVE DATES: The Corporation filed an altered system report with the Chairman of the Committee on Government Reform of the House of Representatives, the Chairman of the Committee on Governmental Affairs of the Senate, and the Administrator, Office of Information and Regulatory Affairs, Office of Management and Budget (OMB) on February 25, 1999. The proposed changes to the Corporation's system of records will become effective 40 days from the date the altered system report was submitted to Congress and to OMB or 30 days from the publication of this notice, whichever is later.

ADDRESSES: Comments should be addressed to the Corporation for National and Community Service, Office of Administrative and Management Services, Attn: Denise Moss, Corporation Records Liaison Officer, 1201 New York Avenue, NW., Washington, DC 20525.

FOR FURTHER INFORMATION CONTACT: Denise Moss, Corporation Records Liaison Officer, 202–606–5000, extension 384. A copy of this proposed altered system of records may be obtained in an alternate format by calling: TDD, 202–606–5256, or by writing to the Corporation for National and Community Service, Office of Administrative and Management Services, Attn: Corporation Records Liaison Officer, 1201 New York Avenue, NW., Washington, DC 20525.

SUPPLEMENTARY INFORMATION: The Corporation publishes the following notice of systems of records:

Notice of System of Records—Preliminary Statement

Corporation—when used in the notice refers to Corporation for National and Community Service.

AmeriCorps—when used in the notice refers to the Volunteers In Service To America (VISTA) program, the National Civilian Community Corps (NCCC) program, the Leaders program, or the state and national program.

Operating Units—The names of the operating units within the Corporation to which a particular system of records pertains are listed under the system manager and address section of each system notice.

Official Personnel Files—Official personnel files of Federal employees in the General Schedule and the Corporation's Alternative Personnel System, in the custody of the Corporation are considered the property of the Office of Personnel Management. Access to such files shall be in accordance with such notices published by OPM. Access to such files in the custody of the Corporation will be granted to individuals to whom such files pertain upon request to the Corporation for National and Community Service, Director, Human Resources, 1201 New York Avenue, NW., Washington, DC 20525.

Various offices in the Corporation maintain files which contain copies of miscellaneous personnel material affecting Corporation employees. These include copies of standard personnel forms, evaluation forms, etc. These files are kept only for immediate office reference and are considered by the Corporation to be part of the personnel file system. The Corporation's internal policy provides that such information is a part of the general personnel files and can be disclosed only through the Director, Human Resources, in order that he or she may ensure that any material be disclosed is relevant, current, and fair to the individual employees. Also, it is the policy of the Corporation to limit the use of such files and to encourage the destruction of as many as possible.

Statement of General Routine Uses

The following general routine uses are incorporated by this reference into each system of records set forth herein, unless specifically limited in the system description.

1. In the event that a record in a system of records maintained by the Corporation indicates, either by itself or in combination with other information in the Corporation's possession, a violation or potential violation of the law (whether civil, criminal, or regulatory in nature, and whether arising by statute or by regulation, rule or order issued pursuant thereto), that record may be referred, as a routine use, to the appropriate agency, whether Federal, state, local or foreign, charged with the responsibility of investigating or prosecuting such violation, or charged with enforcing or implementing the statute, rule, regulation, or order issued pursuant thereto. Such referral shall include, and be deemed to authorize: (1) Any and all appropriate and necessary uses of such records in a court of law or before an administrative board or hearing; and (2) such other interagency referrals as may be necessary to carry out the receiving agencies' assigned law enforcement duties.

2. A record may be disclosed as a routine use to designated officers and employees of other agencies and departments of the Federal government having an interest in the individual for employment purposes including the hiring or retention of any employee, the issuance of a security clearance, the letting of a contract, or the issuance of a license, grant or other benefit by the requesting agency, to the extent that the information is relevant and necessary to the requesting agency's decision on the matter involved, provided, however, that other than information furnished for the issuance of authorized security clearances, information divulged hereunder as to full-time volunteers under Title I of the Domestic Volunteer Service Act of 1973 (42 U.S.C. 4951), and the National and Community Service Act of 1990, as amended, shall be limited to the provision of dates of service and a standard description of service as heretofore provided by the Corporation.

3. A record may be disclosed as a routine use in the course of presenting evidence to a court, magistrate or administrative tribunal of appropriate jurisdiction and such disclosure may include disclosures to opposing counsel in the course of settlement negotiations.

4. A record may be disclosed as a routine use to a member of Congress, or

staff acting upon the constituent's behalf, when the member or staff requests the information on behalf of and at the request of the individual who is the subject of the record.

5. Information from certain systems of records, especially those relating to applicants for Federal employment or volunteer service, may be disclosed as a routine use to designated officers and employees of other agencies of the Federal government for the purpose of obtaining information as to suitability qualifications and loyalty to the United States Government.

6. Information from a system of records may be disclosed to any source from which information is requested in the course of an investigation to the extent necessary to identify the individual, inform the source of the nature and purpose of the investigation, and to identify the type of information requested.

7. Information in any system of records may be used as a data source, for management information, for the production of summary descriptive statistics and analytical studies in support of the function for which the records are collected and maintained, or for related personnel management functions or manpower studies. Information may also be disclosed to respond to general requests for statistical information (without personal identification of individuals) under the Freedom of Information Act.

8. A record from any system of records may be disclosed as a routine use of the National Archives and Records Administration in records management inspections conducted under authority of 44 U.S.C. 2904 and 2906.

9. A record may be disclosed to a Federal or state grand jury agent pursuant to a Federal or state grand jury subpoena or prosecution request that such record be released for the purpose of its introduction to a grand jury.

10. A record may be referred to suspension/debarment authorities, internal to the Corporation, when the record released is germane to a determination of the propriety or necessity for a suspension or debarment action.

11. A record may be disclosed to a contractor, grantee or other recipient of Federal funds when the record to be released reflects serious inadequacies with the recipient's personnel, and disclosure of the record is for the purpose of permitting the recipient to effect corrective action in the Government's best interests.

12. A record may be disclosed to a contractor, grantee or other recipient of Federal funds when the recipient has incurred an indebtedness to the Government through its receipt of Government funds, and release of the record is for the purpose of allowing the debtor to effect a collection against a third party.

13. Information in a system of records may be disclosed to ''consumer reporting agencies'' (as defined in the Fair Credit Reporting Act, 14 U.S.C. 1681a(f), or the Federal Claims Collection Act of 1966, 31 U.S.C. 3701(a)(3)), the U.S. Department of the Treasury or other Federal agencies maintaining debt servicing centers, and to private collection contractors as a routine use for the purpose of collecting a debt owed to the Federal government as provided in regulations promulgated by the Corporation.

14. The names, social security numbers, home addresses, dates of birth, dates of hire, quarterly earnings, employer identifying information, and State of hire of employees may be disclosed to the: (a) Office of Child Support Enforcement, Administration for Children and Families, Department of Health and Human Services Federal Parent Locator System (FPLS), and Federal Tax Offset System for use in locating individuals and identifying their income sources to establish paternity, establishing and modifying orders of child support, identifying sources of income, and for other child support enforcement action; (b) Office of Child Support Enforcement for release to the Social Security Administration for verifying social security numbers in connection with the operation of the FPLS by the Office of Child Support Enforcement; and (3) Office of Child Support Enforcement for release to the U.S. Department of the Treasury for payroll and savings bonds and other deduction purposes, and for purposes of administering the Earned Income Tax Credit Program (Section 32, Internal Revenue Code of 1986), and verifying a claim with respect to employment on a tax return, as required by the Personal Responsibility and Work Opportunity Reconciliation Act of 1996 (Pub. L. 104–193).

15. A record may be disclosed as a routine use to a contractor, expert, or consultant of the Corporation (or an office within the Corporation) when the purpose of the release is in order to perform a survey, audit, or other review of the Corporation's procedures and operations.

Locations of Corporation Service Centers/State Offices

The Corporation maintains five Service Centers with State Offices within their service areas. The Services Centers, their addresses, and the States within their service areas are listed below. In the event of any doubt as to whether a record is maintained in a Service Center or State Office, a query should be directed to the address of the Service Center Director for the appropriate state under their jurisdiction where the volunteer performed their service as listed below. The Service Center Director shall furnish all assistance necessary to locate a specified record.

Atlantic Service Center, 801 Arch Street, Suite 103, Philadelphia, PA 19107–2416 (Connecticut, Delaware, Maine, Maryland, Massachusetts, New Hampshire, New Jersey, New York, Pennsylvania, Puerto Rico, Rhode Island, Vermont, and the Virgin Islands).

Southern Service Center, 60 Forsyth Street SW, Suite 3M40, Atlanta, GA 30303–3201 (Alabama, District of Columbia, Florida, Georgia, Kentucky, Mississippi, North Carolina, South Carolina, Tennessee, Virginia, and West Virginia).

North Central Service Center, 77 West Jackson Blvd., Suite 442, Chicago, IL 60604–3511 (Illinois, Indiana, Iowa, Michigan, Minnesota, Nebraska, North Dakota, Ohio, South Dakota, and Wisconsin).

Southwest Service Center, 1999 Bryan Street, Suite 2050, Dallas, TX 75201 (Arizona, Arkansas, Colorado, Kansas, Louisiana, Missouri, New Mexico, Oklahoma, and Texas).

Pacific Service Center, PO Box 29996, Building 386, Morgan Avenue, Presidio of San Francisco, CA, 94129–09996 (Alaska, American Samoa, California, Guam, Hawaii, Idaho, Montana, Nevada, Oregon, Utah, Washington, and Wyoming).

Notification—Individuals may inquire whether any system of records contains information pertaining to them by addressing the request to the specific Records Liaison Officer for each file category in writing. Such request should include the name and address of the individual, his or her social security number, any relevant data concerning the information sought, and, where possible, the place of assignment or employment, etc. In case of any doubt as to which system contains a record, interested individuals should contact the Corporation for National and Community Service, Office of Administrative and Management Services, Attn: Records Liaison Officer, 1201 New York Avenue, NW, Washington, DC 20525, which has overall supervision of records systems

and will provide assistance in locating and/or identifying appropriate systems.

Access and Contest—In response to a written request by an individual, the appropriate Records Liaison Officer will arrange for access to the requested record or advise the requester if no record exists. If an individual wishes to contest the content of any record, he or she may do so by addressing a written request to the State Program Director in the state where the member performed their assigned duties. If the the State Program Director determines that a request to amend an individual's record should be denied, the State Program Director shall provide all necessary information regarding the request to the Corporation's initial denial authority/Privacy Act Officer.

Locations of Corporation AmeriCorps National Civilian Community Corps Campuses

The Corporation maintains five AmeriCorps*National Civilian Community Corps Campuses (NCCC) under its jurisdiction. The Campuses, and their addresses are listed below. In the event there is any doubt as to whether a record is maintained at a campus location, questions should be directed to the address of the AmeriCorps*NCCC Regional Campus Director for the appropriate campus location where the volunteer performed their service as listed below. The Regional Campus Director shall furnish all assistance necessary to locate a specified record.

AmeriCorps*NCCC Capitol Region Campus, 2 D.C. Village Lane, SW, Washington, DC 20032.

AmeriCorps*NCCC Northeast Campus, VA Medical Center, Building 15, Room 9, Perry Point, MD 21902–0027.

AmeriCorps*NCCC Southeast Campus, 2231 South Hopson Avenue, Charleston, S.C. 29405–2430.

AmeriCorps*NCCC Central Campus, 1059 South Yosemite Street, Bldg 758, Room 213, Aurora, CO 80010–6062.

AmeriCorps*NCCC Western Campus, 2650 Truxtun Road, San Diego, CA 92106–6001.

Access and Contest—In response to a written request by an individual, the appropriate Records Liaison Officer arranges for access to the requested record or advises the requester if no record exists. If an individual wishes to contest the content of any record, he or she may do so by addressing a written request to the AmeriCorps*NCCC Regional Campus Director, located at the pertinent address for each campus location as listed above. If the The Regional Campus Director determines that a request to amend an individual's record should be denied, the Regional Campus Director shall provide all necessary information regarding the request to the Corporation's initial denial authority/Privacy Act Officer.

Listing of Systems of Records

- Accounts Payable File—Corporation-1
- Accounts Receivable and Advances File—Corporation-2
- Domestic Full-time Member Census Master File—Corporation-3
- AmeriCorps Full-time Member Personnel File—Corporation-4
- Employee and Applicant Records File—Corporation-5
- Employee/Member Occupation Injury/Illness Reports and Claims File—Corporation-6
- Travel Files—Corporation-7
- AmeriCorps Member Individual Account—Corporation-8
- Counselors' Report Files—Corporation-9
- Discrimination Complaint Files—Corporation-10
- Employee Pay and Leave Records File—Corporation-11
- Freedom of Information Act and Privacy Act Requests File—Corporation-12
- Legal Office Litigation/Correspondence Files—Corporation-13
- Merit Promotion Plan Files—Corporation-14
- Office of the Inspector General Investigative Files—Corporation-15
- Travel Authorization File—Corporation-16
- Vendor Name and Identification Number Files—Corporation-17
- AmeriCorps* VISTA Member Payroll System File—Corporation-18

CORPORATION—1

SYSTEM NAME:

Accounts Payable File.

SYSTEM LOCATION:

Office of Accounting and Financial Management Services, Corporation for National and Community Service, 1201 New York Avenue, NW, Washington, DC 20525.

CATEGORIES OF INDIVIDUALS COVERED BY THE SYSTEM:

Individuals to whom the agency owes money.

CATEGORIES OF RECORDS IN THE SYSTEM:

Name of payee, address, taxpayer identification number, amount owed, date of liability, amount paid, and schedule number authorizing the U.S. Department of the Treasury to issue payment.

AUTHORITY FOR MAINTENANCE OF THE SYSTEM:

The Domestic Volunteer Service Act of 1973, as amended; the National and Community Service Act of 1990, as amended, and the Budget and Accounting Procedures Act of 1950, as amended; the Chief Financial Officer Act of 1990; and the Debt Collection Improvement Act of 1996.

PURPOSE(S):

To maintain a current record of amounts owed and paid by the Corporation.

ROUTINE USES OF RECORDS IN THE SYSTEM, INCLUDING CATEGORIES OF USERS AND THE PURPOSES OF SUCH USES:

See General Routine Uses contained in Preliminary Statement. Data is also released to the Internal Revenue Service in accordance with the Internal Revenue Code.

POLICIES AND PRACTICES FOR STORING, RETRIEVING, ACCESSING, RETAINING AND DISPOSING OF RECORDS IN THE SYSTEM:

STORAGE:

Records are maintained in file folders which are stored in locked metal file cabinets.

RETRIEVABILITY:

Records are indexed alphabetically by name.

SAFEGUARDS:

Records are available only to staff in the Office of Accounting and Financial Management Services and other appropriate Corporation officials with the need for such records in the performance of their duties.

RETENTION AND DISPOSAL:

Records are held for three (3) years and then retired to the Federal Records Center.

SYSTEM MANAGER(S) AND ADDRESS:

Director, Office of Accounting and Financial Management Services, Corporation for National and Community Service, 1201 New York Avenue, NW, Washington, DC 20525.

NOTIFICATION PROCEDURE:

To determine whether there is a record in the system about individual, that individual should submit a request in writing to the Records Liaison Officer giving name, taxpayer identification number, and address.

RECORD ACCESS PROCEDURES:

See Notification procedures.

CONTESTING RECORD PROCEDURES:

Anyone desiring to contest or amend information contained in this system should write to the Records Liaison Officer at the address given and set forth the basis for which the record is believed to be incomplete or incorrect.

RECORD SOURCE CATEGORIES:

Data in this system is obtained from documents submitted by individuals

covered by the system as well as documents issued by the Corporation officials involved with managing funds.

EXEMPTION CLAIMED FOR THE SYSTEM:

None.

CORPORATION—2

SYSTEM NAME:

Accounts Receivable and Advances File.

SYSTEM LOCATION:

Office of Accounting and Financial Management Services, Corporation for National and Community Service, 1201 New York Avenue, NW, Washington, DC 20525.

CATEGORIES OF INDIVIDUALS COVERED BY THE SYSTEM:

Individuals owing money to the Corporation.

CATEGORIES OF RECORDS IN THE SYSTEM:

Name of debtor, address, taxpayer identification number, amount owed, date of liability, and amount collected.

AUTHORITY FOR MAINTENANCE OF THE SYSTEM:

The Domestic Volunteer Service Act of 1973, as amended; the National and Community Service Act of 1990, as amended; the Budget and Accounting Procedures Act of 1950, as amended, and the Debt Collection Improvement Act of 1996.

PURPOSE(S):

To maintain a current record of amounts owed and paid to the Corporation.

ROUTINE USES OF RECORDS IN THE SYSTEM, INCLUDING CATEGORIES OF USERS AND THE PURPOSES OF SUCH USES:

See General Routine Uses contained in Preliminary Statement. Data may be disclosed to the U.S. Department of Justice, the U.S. Department of the Treasury, or to the General Accounting Office in connection with requests to institute collection litigation or approve writing off a debt when the Corporation is unable to collect a debt through its own efforts.

POLICIES AND PRACTICES FOR STORING, RETRIEVING, ACCESSING, RETAINING AND DISPOSING OF RECORDS IN THE SYSTEM:

STORAGE:

Records are maintained in file folders which are stored in locked metal file cabinets.

RETRIEVABILITY:

Records are indexed alphabetically by name.

SAFEGUARDS:

Records are available only to staff in the Office of Accounting and Financial Management Services or other authorized Corporation officials with the need for such records in the performance of their duties.

RETENTION AND DISPOSAL:

Records are held for three (3) years and then retired to the Federal Records Center.

SYSTEM MANAGER(S) AND ADDRESS:

Office of Accounting and Financial Management Services, Corporation for National and Community Service, 1201 New York Avenue, NW, Washington, DC 20525.

NOTIFICATION PROCEDURE:

To determine whether there is a record in the system about an individual, that individual should submit a request in writing to the Records Liaison Officer giving name, taxpayer identification number, and address.

RECORD ACCESS PROCEDURES:

See Notification procedures.

CONTESTING RECORD PROCEDURES:

Anyone desiring to contest or amend information contained in this system should write to the Records Liaison Officer and set forth the basis for which the record is believed to be incomplete or incorrect.

RECORD SOURCE CATEGORIES:

Data in this system is obtained from documents submitted by individuals covered by the system as well as documents issued by Corporation officials involved with managing funds.

EXEMPTION CLAIMED FOR THE SYSTEM:

None.

CORPORATION—3

SYSTEM NAME:

Domestic Full-time Member Census Master File.

SYSTEM LOCATION:

Corporation for National and Community Service, AmeriCorps*VISTA, 1201 New York Avenue, NW, Washington, DC 20525.

CATEGORIES OF INDIVIDUALS COVERED BY THE SYSTEM:

Any person who has served or is serving as an AmeriCorps*VISTA member.

CATEGORIES OF RECORDS IN THE SYSTEM:

The records maintained contain information extracted from the member's application, information about the member's period of service, and information about the member's history with the Corporation.

AUTHORITY FOR MAINTENANCE OF THE SYSTEM:

The Domestic Volunteer Service Act of 1973, as amended.

PURPOSE(S):

The system of records was established to maintain service histories on all current and former AmeriCorps*VISTA members serving in programs operated by the Corporation.

ROUTINE USES OF RECORDS MAINTAINED IN THE SYSTEM, INCLUDING CATEGORIES OF USERS AND THE PURPOSE OF SUCH USES:

See General Routine Uses contained in Preliminary Statement.

POLICIES AND PRACTICES FOR STORING, RETRIEVING, ACCESSING, RETAINING AND DISPOSING OF RECORDS IN THE SYSTEM:

STORAGE:

Records are stored on magnetic tape; disks, and hard copy, and are kept in a locked room when not in use.

RETRIEVABILITY:

Records are retrieved by social security number and the first four letters of the member's last name.

SAFEGUARDS:

The material on tapes and disks is generally available only to the Corporation's OIT Staff and is so coded as to be unavailable to anyone else. Hard copy records are available only to Corporation staff with a need for such records in the performance of their duties.

RETENTION AND DISPOSAL:

These records are maintained permanently.

SYSTEM MANAGER(S) AND ADDRESS:

Director of AmeriCorps*VISTA, Corporation for National and Community Service, 1201 New York Avenue, NW, Washington, DC 20525.

NOTIFICATION PROCEDURE:

Members and former members wishing to determine if this system contains their records should contact the Corporation for National and Community Service, Director of AmeriCorps*VISTA, 1201 New York Avenue, NW, Washington, DC 20525, and provide name, social security number, and dates of volunteer service.

RECORDS ACCESS PROCEDURES:

Members and former members wishing access to information about their records should contact the Corporation for National and Community Services, Director of AmeriCorps*VISTA, 1201 New York Avenue, NW, Washington, DC 20525.

CONTESTING RECORD PROCEDURES:

An AmeriCorps*VISTA member wishing to amend his or her record may do so by addressing such a request and providinge the basis for the request to the State Program Director in the state where the member performed their assigned duties; an AmeriCorps*NCCC member wishing to amend his or her record may do so by addressing such a request and providing the basis for the request to the AmeriCorps*NCCC Regional Campus Director, located at the pertinent address for each campus location as listed above; and an AmeriCorps*Leader wishing to amend his or her record may do so by addressing such a request and providing the basis for the request to the Director, AmeriCorps*Leaders Office at Corporation Headquarters. If the State Program Director, Regional Campus Director, or Director, AmeriCorps*Leaders determines that a request to amend an individual's record should be denied, each shall provide all necessary information regarding the request to the Corporation's initial denial authority/Privacy Act Officer.

RECORD SOURCE CATEGORIES:

The data is obtained from the member's application and status change and payroll change notices.

EXEMPTION CLAIMED FOR THE SYSTEM:

None.

CORPORATION—4

SYSTEM NAME:

AmeriCorps Full-time Member Personnel File.

SYSTEM LOCATION:

All Corporation State Offices, AmeriCorps*Leaders Office at Corporation Headquarters, and NCCC Regional Campuses.

CATEGORIES OF INDIVIDUALS COVERED BY THE SYSTEM:

All active AmeriCorps members assigned under programs operated by the Corporation.

CATEGORIES OF RECORDS IN THE SYSTEM:

Records maintained contain member application and reference forms, member status and payroll information, member travel vouchers, future plans forms, including evaluation of service, and general correspondence.

AUTHORITY FOR MAINTENANCE OF THE SYSTEM:

The Domestic Volunteer Service Act of 1973, as amended; the National and Community Service Act of 1990, as amended.

PURPOSE(S):

This system of records was established to maintain information on AmeriCorps while they are assigned to their respective programs.

ROUTINE USES OF RECORDS MAINTAINED IN THE SYSTEM, INCLUDING CATEGORIES OF USERS AND THE PURPOSES OF SUCH USES:

The content of these records may be disclosed to the member's sponsor (VISTA) and other Corporation officials concerning placement, performance, support and related matters for AmeriCorps members. Also, see General Routine Uses contained in Preliminary Statement.

POLICIES AND PRACTICES FOR STORING, RETRIEVING, ACCESSING, RETAINING AND DISPOSING OF RECORDS IN THE SYSTEM:

STORAGE:

Records are maintained in file folders which are stored in locked metal file cabinets.

RETRIEVABILITY:

Records are retrievable alphabetically by last name.

SAFEGUARDS:

Records in the system are available only to appropriate Corporation staff in State Offices, the AmeriCorps*Leaders Office at Corporation Headquarters, and Regional NCCC Campuses, and other appropriate officials of the Corporation with need for such records in the performance of their duties.

RETENTION AND DISPOSAL:

Records are retained for one (1) year after the member has terminated and then retired to the Federal Records Center where they are maintained for six (6) years.

SYSTEM MANAGER(S) AND ADDRESS:

The System Manager for VISTAs is the State Program Director in each Corporation State Office; the Regional NCCC Campus Director at each Campus location; and the Director, AmeriCorps*Leaders at Corporation Headquarters.

NOTIFICATION PROCEDURE:

Members wishing to determine if this system contains their records should contact the Corporation State Office (VISTAs) for the state where the member performed their service; NCCC Campus where the member was assigned, and the AmeriCorps*Leaders Office at Corporation Headquarters.

RECORD ACCESS PROCEDURES:

Members wishing access to information about their records should contact the particular Corporation State Office, NCCC Regional Campus where the member was assigned or performed their service, and the AmeriCorps*Leaders Office at Corporation Headquarters, and provide name, social security number, and dates and location of where the member performed their service.

CONTESTING RECORD PROCEDURES:

A member wishing to amend his or her record may do so by addressing a request to the Corporation for National and Community Service, Office of the General Counsel, Attn: Corporation Privacy Act Officer, 1201 New York Avenue, NW, Washington, DC 20525.

RECORD SOURCES CATEGORIES:

The data is supplied by the member or through forms signed and executed by the member, or by Corporation personnel.

EXEMPTION CLAIMED FOR THE SYSTEM:

None.

CORPORATION—5

SYSTEM NAME:

Employee and Applicant Records File.

SYSTEM LOCATION:

Human Resources, Corporation for National and Community Service, 1201 New York Avenue, NW, Washington, DC 20525.

CATEGORIES OF INDIVIDUALS COVERED BY THE SYSTEM:

Current and former employees; applicants; any individual involved in a grievance or grievance appeal or who has filed a complaint with the Department of Labor, Federal Labor Relations Council, Federal Mediation and Conciliation Service, or similar organization; and individuals considered for access to classified information.

CATEGORIES OF RECORDS IN THE SYSTEM:

(1) The Staff Security Files contain investigative information regarding an individual's character, conduct, behavior in the community where he or she lives; loyalty to the U.S. Government; arrest and convictions for any violations against the law; reports or interviews with former supervisors, coworkers, associates, educators, etc., about qualifications of an individual for a specific position; reports of inquires with law enforcement agencies, former employers, educational institutions attended; and other similar information developed from the above.

(2) The Grievance, Appeal and Arbitration Files contain copies of petitions, complaints, charges,

responses, rebuttals, evidentiary materials, briefs, affidavits, statements, records of hearings and decisions or findings of fact with respect thereto and incidental correspondence regarding complaints and appeals with respect to grievances and arbitration matters.

(3) The Employees Indebtedness Files contain records which are primarily correspondence regarding alleged indebtedness of Corporation employees, including employees' responses, the Corporation's response to the employee and/or creditor and administrative correspondence and records relating to agency assistance to the employee in resolving the indebtedness, if appropriate.

(4) The Employee Reemployment and Repromotion Priority Consideration Files list a person's name and the positions he or she was considered for, dates of consideration and a copy of the individual's latest Standard Form 171 and performance evaluation.

(5) The Performance Evaluation File consists of the annual evaluations of employee performance prepared by supervisors and reviewed by supervisory reviewing officials, together with comments, if any by the employee evaluated.

(6) The Management-Union Records System consists of automated data printouts showing an employee's name, grade, series, title, organizational entity and other data which determine inclusion or exclusion from the bargaining unit under the existing union contract. The record also contains a printout showing the amount of dues withheld from each employee who has authorized such withholding, and other related data.

(7) The Human Resources Management Information System is a computer based record which includes data relating to tenure, benefits eligibility, awards, etc., and other data needed by the Office of Human Resources and Corporation managers.

(8) The Personnel History Program contains a record of personnel actions made during employment, forwarding address, reason for leaving, social security number, date of birth, tenure, information regarding date and reason for termination.

AUTHORITY FOR MAINTENANCE OF THE SYSTEM:

The Domestic Volunteer Service Act of 1973, as amended; the National and Community Service Act of 1990, as amended; provisions of the Federal Personnel Manual; Executive Orders concerning management relations with employee organizations; Executive Order 10450; and various acts of Congress relating to personnel investigations authorizing the same by the Office of Personnel Management whose responsibility can, under Civil Service regulations and law, be delegated in whole or in part to agencies.

PURPOSE(S):

To provide an information system which documents and supports the Corporation's personnel management process including those categories listed above.

ROUTINE USES OF RECORDS MAINTAINED IN THE SYSTEM, INCLUDING CATEGORIES OR USERS AND THE PURPOSES OF SUCH USES:

As indicated below, the subsystems incorporate all or some of the published routine uses.

(1) Staff Security Files—in addition to our general routine uses may be disclosed to the Office of Personnel Management as part of the central personnel investigation records system.

(2) Grievance, Appeal and Arbitration Records and Files—in addition to our general routine uses may be disclosed and used: (a) To OPM; the Merit System Protection Board; and the Office of Special Counsel, Merit System Protection Board, on request in conjunction with any appeal or in conjunction with its official duties with regard to personnel matters and investigations regarding complaints of Federal employees and applicants; and (b) To designated hearing examiners, arbitrators and third-party appellate authorities involved in the hearing or appeal procedures.

(3) Employees Indebtedness Records and Files—may be released under our routine uses numbers 1, 2, and 3 except that under routine use number 1, records may be released only to an appropriate Federal agency and the records may also be referred to a court of law or any administrative board of hearing on matters related to probation and parole.

(4) Employee Reemployment and Repromotion Priority Consideration Records and Files—in addition to our general routine uses may be disclosed to: (a) OPM as part of the OPM personnel management evaluation system; and (b) to OPM for information concerning reemployment and repromotion rights.

(5) Performance Evaluation Files—in addition to our general routine uses may be disclosed to OPM in connection with any request for information or inquiry as to Federal personnel regulation.

(6) Management Union Records—in addition to the general routine uses may be disclosed to and used for: (a) The Corporation employees union for maintenance of its dues and inclusion in the bargaining unit; (b) the Treasury Department for preparation of payroll checks with appropriate withholding of dues; and (c) OPM for reports of management/labor relations.

(7) Human Resources Management Information System—used by Corporation officials for day-to-day work information; statistical reports without personal identifiers and for in-house reports relating to management. Information contained in this record is reflected in the individual's official personnel folder.

(8) Personnel History Program—is used by the Human Resources staff to verify service and for day-to-day information.

POLICIES AND PRACTICES FOR STORING, RETRIEVING, ACCESSING, RETAINING AND DISPOSING OF RECORDS IN THE SYSTEM:

STORAGE:

Records are maintained in file folders, floppy disks, lists or loose-leaf binders, and are stored in metal file cabinets with a lock or in secured rooms with access limited to those employees whose duties require access. Where data is obtained via computer, controlled access is maintained through computer security control procedures.

RETRIEVABILITY:

Records are indexed by name, social security number or employee number.

SAFEGUARDS:

Records are generally available to Corporation employees having a need for such records in the performance of their duties. Generally, the Security Files are available only to office heads or security personnel.

RETENTION AND DISPOSAL:

After termination, death or retirement or consideration of an applicant, the Staff Security Files are kept in the security office three (3) years and then retired to a Federal Records Center for twenty-seven (27) years and then destroyed. The Grievances, Appeals and Arbitration Files are retained indefinitely in Human Resources. The Employee Indebtedness Files are destroyed on a bi-annual basis or when the problem is resolved. The Employee Reemployment and Repromotion Priority Consideration Files are retained according to length of reemployment or repromotion eligibility. The Performance Evaluation Files are retained one year or until superseded. The Human Resources Management Information System records and the Personnel Program data are kept indefinitely in the Office of Human

Resources. The Management-Union Lists are retained until superseded by a corrected or updated list.

SYSTEM MANAGER(S) AND ADDRESS:

Director, Human Resources, Corporation for National and Community Service, 1201 New York Avenue, NW, Washington, DC 20525.

NOTIFICATION PROCEDURE:

See the Notification paragraph in the Preliminary Statement.

RECORD ACCESS PROCEDURES:

See the Notification paragraph in the Preliminary Statement.

CONTESTING RECORD PROCEDURES:

Same as ''Record Access Procedures''.

RECORD SOURCE CATEGORIES:

From the individual; the official personnel folder; statistical and other information developed by Human Resource staff, such as enter on duty date and within grade increase due dates; agency supervisors and reviewing officials; individual employee fiscal and payroll records; alleged creditors of employees; witnesses to occurrences giving rise to a grievance, appeal or other action; hearing records and affidavits and other documents used or usable in connection with grievance, appeal and arbitration hearings. Information contained in the Staff Security files is obtained from: (a) Applications and other personnel and security forms furnished by the individual; (b) investigative material furnished by other Federal agencies; (c) personal investigation or written inquiry from associates, police departments, courts, credit bureaus, medical records, probation officials, prison officials, and other sources as may be developed from the above; and (d) the individual.

EXEMPTION CLAIMED FOR THE SYSTEM:

None.

CORPORATION—6

SYSTEM NAME:

Employee/Member Occupational Injury/Illness Reports and Claims File.

SYSTEM LOCATION:

Human Resources, Corporation for National and Community Service, 1201 New York Avenue, NW, Washington, DC 20525.

CATEGORIES OF INDIVIDUALS COVERED BY THE SYSTEM:

Corporation staff and full-time volunteers.

CATEGORIES OF RECORDS IN THE SYSTEM:

Reports of work related injuries and illnesses and claims for workers' compensation submitted to Department of Labor.

AUTHORITY FOR MAINTENANCE OF THE SYSTEM:

Federal Employees Compensation Act & Occupational Safety and Health Administration Act.

PURPOSE(S):

To maintain injury/illness reports data and to track workers' compensation claims on behalf of Corporation staff and full-time members.

ROUTINE USES OF RECORDS MAINTAINED IN THE SYSTEM, INCLUDING CATEGORIES OF USERS AND THE PURPOSES OF SUCH USES:

To determine annual work related injury/illness data re: Corporation staff, and to identify trends if possible. To prepare and submit workers' compensation claims. Also, generally, see General Routine Uses contained in Preliminary Statement.

POLICIES AND PRACTICES FOR STORING, RETRIEVING, ACCESSING, RETAINING AND DISPOSING OF RECORDS IN THE SYSTEM:

STORAGE:

Records are maintained in file folders which are stored in locked metal file cabinets.

RETRIEVABILITY:

Records are maintained by name in alphabetical sequence.

SAFEGUARDS:

Records are available only to claimants and Corporation staff who demonstrate a need to know.

RETENTION AND DISPOSAL:

Official files are kept seven (7) years following year of occurrence. Disposal of records is by shredding.

SYSTEM MANAGER(S) AND ADDRESS:

OWCP Liaison Officer, Human Resources, Corporation for National and Community Service, 1201 New York Avenue, NW, Washington, DC 20525.

NOTIFICATION PROCEDURE:

Claimant writes request for data to the address listed above.

RECORD ACCESS PROCEDURES:

Requester should give OWCP claim number, but it is not mandatory. Data requests may be requested in the name of injured employee/volunteer.

CONTESTING RECORD PROCEDURES:

Claimant or injured employee/member may submit any data deemed relevant to the case to address listed.

RECORD SOURCE CATEGORIES:

Individual who suffers work related injury/illness submits any pertinent data necessary; medical reports, witness statements, time and attendance records, medical bills, legal briefs.

EXEMPTION CLAIMED FOR THE SYSTEM:

None.

CORPORATION—7

SYSTEM NAME:

Travel Files.

SYSTEM LOCATION:

Office of Administrative and Management Services, Travel Unit, Corporation for National and Community Service, 1201 New York Avenue, NW, Washington, DC 20525.

CATEGORIES OF INDIVIDUALS COVERED BY THE SYSTEM:

All Corporation Staff, Consultants, Invitational Travelers, and Relocated Staff.

CATEGORIES OF RECORDS IN THE SYSTEM:

Individuals' records and special event records.

AUTHORITY FOR MAINTENANCE OF THE SYSTEM:

The Domestic Volunteer Service Act of 1973, as amended, and the National Community Service Act of 1990, as amended.

PURPOSE(S):

To maintain travel files on all persons traveling on official Corporation business.

ROUTINE USES OF RECORDS MAINTAINED IN THE SYSTEM, INCLUDING CATEGORIES OF USERS AND THE PURPOSES OF SUCH USES:

See General Routine Uses contained in Preliminary Statement.

POLICIES AND PRACTICES FOR STORING, RETRIEVING, ACCESSING, RETAINING AND DISPOSING OF RECORDS IN THE SYSTEM:

STORAGE:

Files are maintained in individual folders in a locked metal file cabinet when not in immediate use.

RETRIEVABILITY:

Individual's name in alphabetical order and Travel Authorization number.

SAFEGUARDS:

Access only to appropriate personnel and Corporation officials. The metal travel file cabinet is locked when not in use.

RETENTION AND DISPOSAL:

Retention three (3) years. Disposal of records is by shredding.

SYSTEM MANAGER(S) AND ADDRESS:

Travel Analyst, Office of Administrative and Management Services, Corporation for National and

Community Service, 1201 New York Avenue, NW, Washington, DC 20525.

NOTIFICATION PROCEDURE:

Send to address listed.

RECORD ACCESS PROCEDURES:

Travel Analyst, Office of Administrative and Management Services, Corporation for National and Community Service, 1201 New York Avenue, NW, Washington, DC 20525.

CONTESTING RECORD PROCEDURES:

Send to address listed.

RECORD SOURCE CATEGORIES:

Submitted by Corporation employees etc.

EXEMPTION CLAIMED FOR THE SYSTEM:

None.

CORPORATION—8

SYSTEM NAME:

AmeriCorps Member Individual Account.

SYSTEM LOCATION:

Corporation for National and Community Service, National Service Trust Operations, 1201 New York Avenue, NW, Washington, DC 20525.

CATEGORIES OF INDIVIDUALS COVERED BY THE SYSTEM:

Any person who has served or is serving as a member or other full-time, stipended member under a Corporation program.

CATEGORIES OF RECORDS IN THE SYSTEM:

The records maintained contain information extracted from the application, information about the period of service, and information about the member's service history.

AUTHORITY FOR MAINTENANCE OF THE SYSTEM:

The Domestic Volunteer Service Act of 1973, as amended, and the National and Community Service Act of 1990, as amended.

PURPOSE(S):

The system of records was established to maintain service histories on all current and former and other full-time stipend volunteers serving in the Corporation programs and earning an education award.

ROUTINE USES OF RECORDS MAINTAINED IN THE SYSTEM, INCLUDING CATEGORIES OF USERS AND THE PURPOSE OF SUCH USES:

See General Routine Uses contained in Preliminary Statement.

POLICIES AND PRACTICES FOR STORING, RETRIEVING, ACCESSING, RETAINING AND DISPOSING OF RECORDS IN THE SYSTEM:

STORAGE:

Records are stored on magnetic tape, disks, electronic image, hard copy, and are kept in a locked room when not in use.

RETRIEVABILITY:

Records are retrieved by social security number.

SAFEGUARDS:

The material on tapes and disks is generally available only to the Corporation's OIT and Accounting staff, and is so coded as to be unavailable to anyone else. Hard copy records are available only to Corporation staff with a need for such records in the performance of their duties.

RETENTION AND DISPOSAL:

These records are maintained for a period of (7) seven years from date the volunteer earns an education award and then forwarded to the Federal Records Center for (3) three years. Electronically imaged documents will be maintained permanently.

SYSTEM MANAGER(S) AND ADDRESS:

Director, National Service Trust Operations, Corporation for National and Community Service, 1201 New York Avenue, NW, Washington, DC 20525.

NOTIFICATION PROCEDURE:

Persons wishing to determine if this system contains their records should contact the Corporation for National and Community Service, Director, National Service Trust Operations, 1201 New York Avenue, NW, Washington, DC 20525, and provide name, social security number, and dates of volunteer service.

RECORDS ACCESS PROCEDURES:

Persons wishing access to information about their records should contact the Corporation for National and Community Services, Director, National Service Trust Operations, 1201 New York Avenue, NW, Washington, DC 20525.

CONTESTING RECORD PROCEDURES:

A person wishing to amend his or her record may do so by addressing such request to the Corporation for National and Community Service, Office of the General Counsel, Attn: Corporation Privacy Act Officer, 1201 New York Avenue, NW, Washington, DC 20525.

RECORD SOURCE CATEGORIES:

The data is obtained from enrollment and exit forms.

EXEMPTION CLAIMED FOR THE SYSTEM:

None.

CORPORATION—9

SYSTEM NAME:

Counselors' Report Files.

SYSTEM LOCATION:

Equal Opportunity Office, Corporation for National and Community Service, 1201 New York, Avenue, NW, Washington, DC 20525.

CATEGORIES OF INDIVIDUALS COVERED BY THE SYSTEM:

Any employee or applicant for employment, service member, or applicant or trainee for volunteer or service status, or employee of a grantee who has contacted or requested a Corporation Equal Opportunity Counselor for counseling but has not filed a formal discrimination complaint.

CATEGORIES OF RECORDS IN THE SYSTEM:

Counselors' Reports, Privacy Act notice, confidentiality agreement, notice to members of collective bargaining agreement, notice of final interview, notes and correspondence, and copies of personnel records or other documents relevant to the matter presented to the Counselor, and any other records relating to the counseling instance.

AUTHORITY FOR MAINTENANCE OF THE SYSTEM:

Titles VI and VII of the Civil Rights Act of 1964, as amended; Age Discrimination in Employment Act, as amended; Rehabilitation Act of 1973, as amended; Title IX of the Education Amendments of 1972, as amended; Domestic Volunteer Service Act of 1973, as amended; National and Community Service Act of 1990, as amended; and the Age Discrimination Act, as amended.

PURPOSE(S):

To enable Equal Opportunity Counselors to look into matters brought to their attention, provide counseling, attempt to resolve the matter, and document actions taken.

ROUTINE USES OF RECORDS MAINTAINED IN THE SYSTEM, INCLUDING CATEGORIES OF USERS AND THE PURPOSE OF SUCH USES:

1. Referral or disclosure: (a) To a Federal, state, or local agency charged with the responsibility of investigating, enforcing, or implementing the statute, rule, regulation, or order; (b) to an investigator, Counselor, grantee or other recipient of Federal financial assistance, or hearing officer or arbitrator charged with the above responsibilities; (c) any and all appropriate and necessary uses of such records in a court of law or before an administrative board or

hearing; and (d) such other referrals as may be necessary to carry out the enforcement and implementation of the statutes, rules, regulations, or orders.

2. Disclosure to the Congressional committees having legislative jurisdiction over the program involved, including when actions are proposed to be undertaken by suspending or terminating or refusing to grant or to continue Federal financial assistance for violation of the statutes, rules, regulations, or orders for recipients of Federal financial assistance from the Corporation.

3. Disclosure to any source, either private or governmental, to the extent necessary to secure from source information relevant to, and sought in furtherance of, a legitimate investigation or EO counseling matter.

4. Disclosure to a contractor, grantee or other recipient of Federal financial assistance, when the record to be released reflects serious inadequacies with the recipient's personnel, and disclosure of the record is for the purpose of permitting the recipient to effect corrective action in the Government's best interests.

5. Disclosure to any party pursuant to the receipt of a valid subpoena.

6. Disclosure during the course of presenting evidence to a court magistrate or administrative tribunal of appropriate jurisdiction and such disclosure may include disclosure to opposing counsel in the course of settlement negotiations.

7. Disclosure to a member of Congress submitting a request involving an individual who is a constituent of such member who has requested assistance from the member with respect to the subject matter of the record.

8. Information in any system of records may be used as a data source, for management information, for the production of summary descriptive statistics and analytical studies in support of the function for which the records are collected and maintained, or for related personnel management functions or manpower studies. Information may also be disclosed to respond to general requests for statistical information (without personal identification of individuals) under the Freedom of Information Act.

9. Information in any system of records to be disclosed to a Congressional office, in response to an inquiry from any such office, made at the request of the individual to whom the record pertains.

10. A record from any system of records may be disclosed as a routine use of the National Archives and Records Administration, in records management inspection conducted under authority of 44 U.S.C. 209 and 290.

11. Referral to Federal, state, local and professional licensing authorities when the record to be released reflects on the moral, educational, or vocational qualifications of an individual seeking to be licensed.

12. Disclosure to the Office of Government Ethics (OGE) for any purpose consistent with OGE's mission, including the compilation of statistical data.

13. Disclosure to the Department of Justice in order to obtain the Department's advice regarding Corporation's disclosure obligations under the Freedom of Information Act.

14. Disclosure of the Office of Management and Budget (OMB) or the Equal Employment Opportunity Commission (EEOC) in order to obtain OMB's advice regarding Corporation's obligations under the Privacy Act.

Note: The Agency-wide statement of general routine uses does not apply to this system of records.

POLICIES AND PRACTICES FOR STORING, RETRIEVING, ACCESSING, RETAINING AND DISPOSING OF RECORDS IN THE SYSTEM:

STORAGE:

Files are maintained in folders or computer diskettes and locked in metal file cabinets when not in immediate use.

RETRIEVABILITY:

Retrievability is by the name of the person who contacted the Counselor.

SAFEGUARDS:

Records in the system are available only to appropriate personnel in the Office of Equal Opportunity and other designated officials of the Corporation with a need for such records in the performance of their duties.

RETENTION AND DISPOSAL:

Two (2) years after completion of counseling, the files are destroyed.

SYSTEM MANAGER(S) AND ADDRESS:

Director, Equal Opportunity, Corporation for National and Community Service, 1201 New York Avenue, NW., Washington, DC 20525.

NOTIFICATION PROCEDURE:

Request by individuals on whether a record is maintained about himself or herself should be addressed to the System Manager.

RECORD ACCESS PROCEDURES:

Request for access to these records should be addressed to the System Manager.

CONTESTING RECORD PROCEDURES:

Contest to information included in these records should be addressed to the System Manager.

RECORD SOURCE CATEGORIES:

Data in this system is obtained from the following categories of sources: (1) Aggrieved persons, witnesses, etc., in counseling matters; (2) Counselors' Reports; (3) Copies of documents relevant to any counseling matter; and (4) Correspondence.

EXEMPTION CLAIMED FOR THE SYSTEM:

None.

CORPORATION—10

SYSTEM NAME:

Discrimination Complaint Files.

SYSTEM LOCATION:

Equal Opportunity Office, Corporation for National and Community Service, 1201 New York Avenue, NW., Washington, DC 20525.

CATEGORIES OF INDIVIDUALS COVERED BY THE SYSTEM:

Any employee or applicant for employment, AmeriCorps member or applicant or trainee for volunteer or service status, or employee of a grantee, or program beneficiary who has filed a formal complaint with or against the Corporation.

CATEGORIES OF RECORDS IN THE SYSTEM:

Formal complaints, Reports of Investigation, Counseling documents, case decisions, and relevant correspondence, including settlement agreements.

AUTHORITY FOR MAINTENANCE OF THE SYSTEM:

Titles VI and VII of the Civil Rights Act of 1964, as amended; the Age Discrimination in Employment Act, as amended; the Rehabilitation Act of 1973, as amended; Title IX of the Education Amendments of 1972, as amended; the Domestic Volunteer Service Act of 1973, as amended; the National and Community Service Act of 1990, as amended; and the Age Discrimination Act, as amended.

PURPOSE(S):

To enable the Corporation to investigate and adjudicate complaints of discrimination.

ROUTINE USES OF RECORDS MAINTAINED IN THE SYSTEM, INCLUDING CATEGORIES OF USERS AND THE PURPOSES OF SUCH USES:

1. Referral or disclosure: (a) To a Federal, state, or local agency charged with the responsibility of investigating, enforcing, or implementing the statute, rule, regulation, or order; (b) to an

investigator, counselor, grantee or other recipient of Federal financial assistance or hearing officer or arbitrator charged with the above responsibilities; (c) any and all appropriate and necessary uses of such records in a court of law or before an administrative board or hearing; and (d) such other referrals as may be necessary to carry out the enforcement and implementation of the statutes, rules, regulations, or orders.

2. Disclosure to the Congressional committees having legislative oversight over the program involved, including when actions are proposed to be undertaken by suspending or terminating or refusing to grant or to continue Federal financial assistance for violation of the statutes, rules, regulations, or orders for recipients of Federal financial assistance from the Corporation.

3. Disclosure to any source, either private or governmental, to the extent necessary to secure from source information relevant to, and sought in furtherance of, a legitimate investigation or EO counseling matter.

4. Disclosure to a contractor, grantee or other recipient of Federal financial assistance, when the record to be released reflects serious inadequacies with the recipient's personnel, and disclosure of the record is for the purpose of permitting the recipient to effect corrective action in the Government's best interests.

5. Disclosure to any party pursuant to the receipt of a valid subpoena.

6. Disclosure during the course of presenting evidence to a court, magistrate or administrative tribunal of appropriate jurisdiction and such disclosure may include disclosures to opposing counsel in the course settlement negotiations.

7. Disclosure to a member of Congress submitting a request involving an individual who has requested assistance from the member with respect to the subject matter of the record.

8. Information in any system of records may be used as a data source, for management information, for the production of summary descriptive statistics and analytical studies in support of the function for which the records are collected and maintained, or for related personnel management functions or manpower studies. Information may also be disclosed to respond to general requests for statistical information (without personal identification of individuals) under the Freedom of Information Act.

9. A record from any system of records may be disclosed as a routine use of the National Archives and Records Administration, in records management inspections conducted under authority of 44 U.S.C. 2094 and 2906.

10. Referral to Federal, state, local and professional licensing authorities when the record to be released reflects on the moral, educational, or vocational qualifications of an individual seeking to be licensed.

11. Disclosure to the Office of Government Ethics (OGE) for any purpose consistent with OGE's mission, including the compilation of statistical data.

12. Disclosure to the Department of Justice in order to obtain the Department's advice regarding the Corporation's disclosure obligations under the Freedom of Information Act.

13. Disclosure to the Office of Management and Budget (OMB) or the Equal Employment Opportunity Commission (EEOC) in order to obtain OMB's advice regarding the Corporation's obligations under the Privacy Act.

Note: The Agency-wide statement of general routine uses does not apply to this system of records.

POLICIES AND PRACTICES FOR STORING, RETRIEVING, ACCESSING, RETAINING AND DISPOSING OF RECORDS IN THE SYSTEM:

STORAGE:

Files are maintained in folders or on computer diskettes which are locked in metal file cabinets when not in immediate use.

RETRIEVABILITY:

Files are retrieved by the complainant's name.

SAFEGUARDS:

Records in the system of records are available only to appropriate personnel in Equal Opportunity and other designated officials of the Corporation with a need of such records in the performance of their duties.

RETENTION AND DISPOSAL:

Records are destroyed four (4) years after the close of the case.

SYSTEM MANAGER(S) AND ADDRESS:

Director, Equal Opportunity, Corporation for National and Community Service, 1201 New York Avenue, NW., Washington, DC 20525.

NOTIFICATION PROCEDURE:

Request by individuals on whether a record is maintained about himself or herself should be addressed to the System Manager.

RECORD ACCESS PROCEDURES:

Request for access to these records should be sent to the System Manager.

CONTESTING RECORD PROCEDURES:

Contest of information included in these records should be sent to the System Manager.

RECORD SOURCE CATEGORIES:

Data in this system is obtained from the following categories of sources: (1) Complainants, witnesses, etc., in discrimination complaints; (2) Reports of investigations and Counselors' Reports; (3) Copies of documents relevant to any EO investigation; (4) Records of hearings on complaint; and (5) Correspondence.

EXEMPTION CLAIMED FOR THE SYSTEM:

None.

CORPORATION—11

SYSTEM NAME:

Employee Pay and Leave Records File.

SYSTEM LOCATION:

Human Resources, Corporation for National and Community Service, 1201 New York Avenue, NW., Washington, DC 20525.

CATEGORIES OF INDIVIDUALS COVERED BY THE SYSTEM:

Corporation employees and former employees.

CATEGORIES OF RECORDS IN THE SYSTEM:

Personnel actions; employing, promoting and terminating employees; savings bond applications; advises of allotments; IRS tax withholdings, applications, and records regarding collections for overpayments; and time and attendance records.

AUTHORITY FOR MAINTENANCE OF THE SYSTEM:

GAO Policy and Procedures Manual; 31 U.S.C. 66(a); and the Budget and Accounting Procedures Act of 1950, as amended.

PURPOSE(S):

To provide a system whereby Corporation employees can track payroll and leave information.

ROUTINE USES OF RECORDS MAINTAINED IN THE SYSTEM, INCLUDING CATEGORIES OF USERS AND THE PURPOSES OF SUCH USES:

Information from these records is routinely provided: (1) To the U.S. Department of the Treasury for payroll and savings bonds and other deduction purposes; (2) to the Internal Revenue Service with regard to tax deductions; and (3) to participating insurance companies holding policies with respect to employees of the Corporation. Also, see General Routine Uses contained in Preliminary Statement.

POLICIES AND PRACTICES FOR STORING, RETRIEVING, ACCESSING, RETAINING AND DISPOSING OF RECORDS IN THE SYSTEM:

STORAGE:

Records are maintained in file folders which are stored in locked metal file cabinets. The individual Time and Attendance records maintained by designated timekeepers throughout the agency are also stored in locked metal file cabinets.

RETRIEVABILITY:

Records are by name in alphabetical order.

SAFEGUARDS:

Records in the system are available only to employees of the Corporation with a need for such records in the performance of their duties.

RETENTION AND DISPOSAL:

Records in the system are maintained for three (3) years after the end of the fiscal year in which an employee terminates employment with the Corporation and then retired to the nearest Federal Records Center in accordance with General Accounting Office instructions.

SYSTEM MANAGER(S) AND ADDRESS:

Payroll Supervisor, Corporation for National and Community Service, Human Resources, 1201 New York Avenue, NW., Washington, DC 20525.

NOTIFICATION PROCEDURE:

See the Notification paragraph in the Preliminary Statement.

RECORD ACCESS PROCEDURES:

See the Access and Contest paragraph in the Preliminary Statement.

CONTESTING RECORD PROCEDURES:

See the Access and Contest paragraph in the Preliminary Statement.

RECORD SOURCE CATEGORIES:

Corporation employee to whom the record pertains.

EXEMPTION CLAIMED FOR THE SYSTEM:

None.

CORPORATION—12

SYSTEM NAME:

Freedom of Information Act and Privacy Act Requests File.

SYSTEM LOCATION:

Office of the General Counsel, Corporation for National and Community Service, 1201 New York Avenue, NW., Washington, DC 20525.

CATEGORIES OF INDIVIDUALS COVERED BY THE SYSTEM:

Persons who have submitted Freedom of Information Act and/or Privacy Act requests to the Corporation.

CATEGORIES OF RECORDS IN THE SYSTEM:

Formal requests (FOIA/PA), research data, written decisions, and relevant correspondence, including final responses to the requesters.

AUTHORITY FOR MAINTENANCE OF THE SYSTEM:

The Freedom of Information Act of 1966, as amended, and the Privacy Act of 1974, as amended.

PURPOSE(S):

To maintain files of FOIA/Privacy Act requests and the Corporation's responses.

ROUTINE USES OF RECORDS MAINTAINED IN THE SYSTEM, INCLUDING CATEGORIES OF USERS AND THE PURPOSES OF SUCH USES:

See General Routine Uses contained in Preliminary Statement.

POLICIES AND PRACTICES FOR STORING, RETRIEVING, ACCESSING, RETAINING AND DISPOSING OF RECORDS IN THE SYSTEM:

STORAGE:

Records are maintained in file folders which are stored in locked metal file cabinets.

RETRIEVABILITY:

Records are indexed by number and by year.

SAFEGUARDS:

Records in the system are available only to the Corporation FOIA/Privacy Act Officer and other authorized officials of the Corporation with a need of such records in the performance of their duties.

RETENTION AND DISPOSAL:

Records concerning requests and appeals are destroyed three (3) years after initial request.

SYSTEM MANAGER(S) AND ADDRESS:

Corporation FOIA/Privacy Act Officer, Corporation for National and Community Service, Office of the General Counsel, 1201 New York Avenue, NW., Washington, DC 20525.

NOTIFICATION PROCEDURE:

See Notification paragraph in the Preliminary Statement.

RECORD ACCESS PROCEDURES:

See Access and Consent paragraph in the Preliminary Statement.

CONTESTING RECORD PROCEDURES:

See Access and Contest paragraph in the Preliminary Statement.

RECORD SOURCE CATEGORIES:

Data in this system is obtained from documents submitted by individuals engaging in official FOIA/Privacy Act requests as well as from responses issued by officials of the Corporation.

EXEMPTION CLAIMED FOR THE SYSTEM:

None.

CORPORATION—13

SYSTEM NAME:

Legal Office Litigation/Correspondence Files.

SYSTEM LOCATION:

Office of the General Counsel, Corporation for National and Community Service, 1201 New York Avenue, NW., Washington, DC 20525.

CATEGORIES OF INDIVIDUALS COVERED BY THE SYSTEM:

Individuals involved in litigation which requires General Counsel action.

CATEGORIES OF RECORDS IN THE SYSTEM:

Statements; affidavits/declarations; investigatory and administrative reports; personnel, financial, medical and business records; discovery and discovery responses; motions; orders, rulings; letters; messages; forms; reports; surveys; audits; summons; English translations of foreign documents; photographs; legal opinions; subpoenas; pleadings; memos; related correspondence; briefs; petitions; court records involving litigation; and related matters.

AUTHORITY FOR MAINTENANCE OF THE SYSTEM:

These records are maintained under general authority of the Office of the General Counsel to represent the Corporation in connection with its dealings with its employees, and the general functions of the Office of the General Counsel to provide advice and counsel to the Chief Executive Officer of the Corporation and his or her staff.

PURPOSE(S):

To maintain files relating to litigation matters involving the Corporation.

ROUTINE USES OF RECORDS MAINTAINED IN THE SYSTEM, INCLUDING CATEGORIES OF USERS AND THE PURPOSES OF SUCH USES:

To prepare correspondence and materials for litigation.

POLICIES AND PRACTICES FOR STORING, RETRIEVING, ACCESSING, RETAINING AND DISPOSING OF RECORDS IN THE SYSTEM:

STORAGE:

Records are maintained in file folders which are stored in locked metal file cabinets. Computerized files are maintained on employee computers.

RETRIEVABILITY:

Name of individual and the year litigation commenced.

SAFEGUARDS:

Records are available only to employees assigned to the General Counsel Office or those officials authorized by the General Counsel with a need of such records in the performance of their duties.

RETENTION AND DISPOSAL:

Records will be maintained in the Office of the General Counsel for one (1) year after case closure. Records will then be sent to the Federal Records Center where they will be destroyed after ten (10) years.

SYSTEM MANAGER(S) AND ADDRESS:

General Counsel, Corporation for National and Community Service, 1201 New York Avenue, NW., Washington, DC 20525.

NOTIFICATION PROCEDURE:

Employees wishing to determine if this system contains records relating to them should contact the Corporation for National and Community Service, General Counsel Office, 1201 New York Avenue, NW., Washington, DC 20525.

RECORD ACCESS PROCEDURES:

Litigation files are not subject to access. Other files may be accessed in accordance with agency-wide regulations.

CONTESTING RECORD PROCEDURES:

Contest of information included in these records should be sent to the System Manager.

RECORD SOURCE CATEGORIES:

Data is obtained from the following categories of sources: (1) Corporation employees; (2) Correspondence and reports from persons and agencies dealing with the agency and its employees; (3) Work product and research of lawyers of the office; and (4) Court records.

EXEMPTION CLAIMED FOR THE SYSTEM:

Any information compiled in reasonable anticipation of a civil action or proceeding. 5 U.S.C. 552a(d)(5).

CORPORATION—14

SYSTEM NAME:

Merit Promotion Plan Files.

SYSTEM LOCATION:

Human Resources, Corporation for National and Community Service, 1201 New York Avenue, NW., Washington, DC 20525.

CATEGORIES OF INDIVIDUALS COVERED BY THE SYSTEM:

Applicants for employment with the Corporation.

CATEGORIES OF RECORDS IN THE SYSTEM:

These files contain copies of applications for employment (SF–612 or resumes) submitted by applicants and other background information regarding qualifications of the applicant for positions in the Corporation.

AUTHORITY FOR MAINTENANCE OF THE SYSTEM:

The Domestic Volunteer Service Act of 1973, as amended, and the National Community Service Act of 1990, as amended.

PURPOSE(S):

To provide documentation necessary to support the Corporation's merit selection process.

ROUTINE USES OF RECORDS MAINTAINED IN THE SYSTEM, INCLUDING CATEGORIES OF USERS AND THE PURPOSES OF SUCH USES:

The contents of these records and files may be disclosed and used as follows: (1) To Human Resources with regard to any question of eligibility, suitability or qualifications of an applicant for employment; and (2) to any source which requests information in the course of an inquiry as to the qualifications of an applicant to the extent necessary to identify the individual, inform the source of the nature and purpose of the inquiry, and to identify the type of information requested. Also, see General Routine Uses contained in Preliminary Statement.

POLICIES AND PRACTICES FOR STORING, RETRIEVING, ACCESSING, RETAINING AND DISPOSING OF RECORDS IN THE SYSTEM:

STORAGE:

Records are maintained in file folders which are stored in locked metal file cabinets.

RETRIEVABILITY:

Records are indexed in order of vacancy announcement number.

SAFEGUARDS:

Records are generally available only to Corporation employees with the need for such records in the performance of their duties.

RETENTION AND DISPOSAL:

Records are destroyed when applications are two (2) years old. Applications which resulted in appointment are filed in the Official Personnel Folder and are subsequently retired to the Federal Records Center, St. Louis, Missouri.

SYSTEM MANAGER(S) AND ADDRESS:

Director, Human Resources, Corporation for National and Community Service, 1201 New York Avenue, NW, Washington, DC 20525.

NOTIFICATION PROCEDURE:

See the Notification paragraph in the Preliminary Statement.

RECORD ACCESS PROCEDURES:

See the Access and Contest paragraph in the Preliminary Statement.

CONTESTING RECORD CATEGORIES:

Same as Record Access Procedures category.

RECORD SOURCE CATEGORIES:

Information contained in the system is obtained from the following categories of sources: Applications and other personnel forms furnished by the individual; oral or written inquires from sources disclosed by the applicant, such as, employers, schools, references, etc.

EXEMPTION CLAIMED FOR THE SYSTEM:

None.

CORPORATION—15

SYSTEM NAME:

Office of the Inspector General Investigative Files.

SYSTEM LOCATION:

Office of the Inspector General, Corporation for National and Community Service, 1201 New York Avenue, NW, Washington, DC 20525.

CATEGORIES OF INDIVIDUALS COVERED BY THE SYSTEM:

Subjects, complainants, and witnesseses of investigations, complaints, or other matters, including (but not necessarily limited to) former and present Corporation employees; former and present Corporation grant recipients, applicants, consultants, contractors and subcontractors and their employees; and other parties doing business or proposing to conduct business with the Corporation or its recipients, contractors and subcontractors.

CATEGORIES OF RECORDS IN THE SYSTEM:

All correspondence relevant to the investigation; all internal staff memoranda; information provided by subjects, witnesses, and governmental investigatory or law enforcement organizations; copies of all subpoenas issued during the investigation; affidavits, statements from witnesses, memoranda of interviews, transcripts of testimony taken in the investigation and accompanying exhibits; documents and records or copies obtained during the

investigation; working papers of the staff, investigative notes, and other documents and records relating to the investigation; information about criminal, civil, or administrative referrals; and opening reports, progress reports, and closing reports, with recommendations for corrective action.

AUTHORITY FOR MAINTENANCE OF THE SYSTEM:

The Inspector General Act of 1978, as amended, 5 U.S.C. app. 3.

PURPOSE(S):

To maintain files of investigative and reporting activities carried out by the Office of the Inspector General.

ROUTINE USES OF RECORDS MAINTAINED IN THE SYSTEM, INCLUDING CATEGORIES OF USERS AND THE PURPOSES OF SUCH USES:

1. Referral to Federal, state, local and foreign investigative or prosecutive authorities.

A record in the system of records, which indicates either by itself or in combination with other information within the Corporation's possession, a violation or potential violation of law, whether civil, criminal or regulatory and whether arising by general statute or particular program statute, or by regulation, rule or order issued pursuant thereto, may be disclosed, as a routine use, to the appropriate Federal, foreign, state or local agency or professional organization charged with the responsibility of investigating or prosecuting such violation or charged with enforcing or implementing or investigating or prosecuting such violation or charged with enforcing or implementing the statue or rule, regulation or order issued pursuant thereto.

2. Disclosure to a Federal or state grand jury agent pursuant to a Federal or state grand jury subpoena or prosecution request that such record be released for the purpose of its introduction to a grand jury.

3. Referral to suspension/debarment authorities, internal to the Corporation, when the record released is germane to a determination of the propriety of, or necessity for, a suspension or debarment action.

4. Referral to Federal, state, local and professional licensing authorities when the record to be released reflects on the moral, educational, or vocational qualifications of an individual holding a license or seeking to be licensed.

5. Disclosure to a contractor, grantee, or subgrantee or other recipient of Federal funds, when the record to be released reflects serious inadequacies with the recipient's personnel, and disclosure of the record is for the purpose of permitting the recipient to effect corrective action in the Government's best interest.

6. Disclosure to a contractor, grantee, or subgrantee or other recipient of Federal funds, when the recipient has incurred an indebtedness to the Government through its receipt of Government funds, and release of the record is for the purpose of allowing the debtor to effect a collection against a third party.

7. Disclosure to any source, either private or governmental, to the extent necessary to secure from such source information relevant to, and sought in furtherance of, a legitimate investigation or audit.

8. Disclosure to a domestic, foreign or international governmental agency considering personnel or other internal actions, such as assignment, hiring, promotion, or retention of an individual, issuance of a security clearance, reporting an investigation of an individual, award or other benefit, to the extent that the information is relevant to such agency's decision on the matter.

9. Disclosure to the Office of Government Ethics (OGE) for any purpose consistent with OGE's mission, including the compilation of statistical data, or the mission of the OIG.

10. Disclosure to a Board of Contract Appeals, the General Accounting Office or other tribunal hearing a bid protest involving a Corporation or OIG procurement.

11. Disclosure to a domestic, foreign or international government law enforcement agency maintaining civil, criminal or other relevant enforcement information, or other pertinent information, in order that the OIG may obtain information relevant to a decision concerning the assignment, hiring, promotion, or retention of an individual, the issuance of a security clearance, the letting of a contract, or the issuance of a license, grant, or other benefit.

12. Disclosure to the Department of Justice in order to obtain the Department's advice regarding OIG's obligations under the Freedom of Information Act.

13. Disclosure to the Office of Management and Budget (OMB) in order to obtain OMB's advice regarding OIG's obligations under the Privacy Act.

14. Disclosure to a member of Congress making a request at the behest of a party protected under the Privacy Act, when the member of Congress informs the appropriate official that the individual to whom the record pertains has authorized the member of Congress to have access.

15. Disclosure to any Federal agency pursuant to the receipt of a valid subpoena.

16. Disclosure to the U.S. Department of the Treasury or the U.S. Department of Justice when the Corporation or the OIG is seeking to obtain taxpayer information from the Internal Revenue Service.

17. Disclosure to debt collection contractors for the purpose of collecting delinquent debts as authorized by the Debt Collection Improvement Act of 1996 (31 U.S.C. 3713).

18. Disclosure to a ''consumer reporting agency'' as that term is defined in the Fair Credit Reporting Act (15 U.S.C. 1681a(f)), and the Federal Claims Collection Act of 1966 (31 U.S.C. 3701 (a)(3)), in order to obtain information in the course of an investigation or audit.

19. Disclosure to Corporation or OIG counsel, an administrative hearing tribunal, or counsel to the adverse party, in Program Fraud Civil Remedies Act or other litigation.

20. Disclosure to a Federal, State, or local agency for use in computer matching programs to prevent and detect fraud and abuse in benefit or other programs, to support civil and criminal law enforcement activities of those agencies and their components, and to collect debts and overpayments owed to those agencies and their components.

21. Disclosure to any court, magistrate or administrative authority during the course of any litigation or settlement negotiations in which the Corporation is a party or has an interest. A record in the system of records may be disclosed in a proceeding before a court or adjudicative body before which the Corporation or the OIG is authorized to appear, or in the course of settlement negotiations involving—

(1) OIG, the Corporation, or any component thereof;

(2) Any employee of the OIG or the Corporation in his or her official capacity;

(3) Any employee of the Corporation in his or her individual capacity, where the Government has agreed to represent the employee; or

(4) The United States, where the OIG determines that the litigation is likely to affect the OIG or the Corporation or any of its components.

22. Disclosure to OIG's or the Corporation's legal representative, including the U.S. Department of Justice and other outside legal counsel, when the OIG or the Corporation is a party in actual or anticipated litigation or has an interest in such litigation.

POLICIES AND PRACTICES FOR STORING, RETRIEVING, ACCESSING, RETAINING AND DISPOSING OF RECORDS IN THE SYSTEM:

STORAGE:

The Office of the Inspector General Investigative Files consist of paper records maintained in folders and an automated data base maintained on computer diskettes. The folders and diskettes are stored in locked metal file cabinets. The file cabinets are located in the Office of the Inspector General.

RETRIEVABILITY:

The records are retrieved by a unique control number assigned to each investigation.

SAFEGUARD:

Records in the system are available only to those persons whose duties require such access. The records are kept in limited access areas during duty hours and in locked file cabinets in a locked office at all other times.

RETENTION AND DISPOSAL:

Records will be held in the office pursuant to General Records Schedule 22, June 1988, and will be destroyed by shredding or burning when no longer needed.

SYSTEM MANAGER(S) AND ADDRESS:

Inspector General, Office of the Inspector General, Corporation for National and Community Service, 1201 New York Avenue, NW, Washington, DC 20525.

NOTIFICATION PROCEDURE:

To determine whether this system of records contains a record pertaining to the requesting individual, the individual should write to the System Manager furnishing his or her name, address, telephone number, and social security number.

RECORD ACCESS PROCEDURES:

See Notification Procedures.

CONTESTING RECORD PROCEDURES:

Individuals desiring to contest or amend information maintained in this system of records should write to the System Manager, setting forth the basis for which the individual believes the record is incomplete, irrelevant, incorrect or untimely.

RECORD SOURCE CATEGORIES:

Information in this system of records is obtained from: Corporation staff and official Corporation records; current and former employees, contractors, grantees and their employees; subgrantees and their employees; AmeriCorps members or former members in Corporation-funded programs; and non-Corporation persons. Individuals to be interviewed and records to be examined are selected based on the nature of the allegations being investigated.

EXEMPTION CLAIMED FOR THE SYSTEM:

The Office of Inspector General published exemptions under 5 U.S.C. 552a(j) and (k).

CORPORATION—16

SYSTEM NAME:

Travel Authorization Files.

SYSTEM LOCATION:

Office of Accounting and Financial Management Services, Corporation for National and Community Service, 1201 New York Avenue, NW, Washington, DC 20525.

CATEGORIES OF INDIVIDUALS COVERED BY THE SYSTEM:

Corporation employees or any other person invited to travel at the expense of the Corporation.

CATEGORIES OF RECORDS IN THE SYSTEM:

The records consist of travel authorizations, vouchers, receipts, payment records, and other materials related to official travel.

AUTHORITY FOR MAINTENANCE OF THE SYSTEM:

The Domestic Volunteer Service Act of 1973, as amended; the National and Community Service Act of 1990, as amended, and the Budget and Accounting Procedures Act of 1950, as amended.

PURPOSE(S):

To record and manage the payment of expenses for official travel.

ROUTINE USES OF RECORDS MAINTAINED IN THE SYSTEM, INCLUDING CATEGORIES OF USERS AND THE PURPOSES OF SUCH USES:

See General Routine Uses contained in Preliminary Statement.

POLICIES AND PRACTICES FOR STORING, RETRIEVING, ACCESSING, RETAINING AND DISPOSING OF RECORDS IN THE SYSTEM:

STORAGE:

Records are maintained in file folders which are stored in locked metal file cabinets.

RETRIEVABILITY:

Records are indexed alphabetically by name.

SAFEGUARDS:

Records are available only to staff in the Office of Accounting and Financial Management Services, and other appropriate Corporation officials with the need for such records in the performance of their duties.

RETENTION AND DISPOSAL:

Records are held for three (3) years and then retired to the Federal Records Center.

SYSTEM MANAGER(S) AND ADDRESS:

Director, Office of Accounting and Financial Management Services, Corporation for National and Community Service, 1201 New York Avenue NW, Washington, DC 20525.

NOTIFICATION PROCEDURE:

To determine whether there is a record in the system about an individual, that individual should submit a request in writing to the System Manager giving name, taxpayer identification number, and address.

RECORD ACCESS PROCEDURES:

See Notification procedures.

CONTESTING RECORD PROCEDURES:

Anyone desiring to contest or amend information contained in this system should write to the System Manager and set forth the basis for which the record is believed to be incomplete or incorrect.

RECORD SOURCE CATEGORIES:

Data in this system is obtained from documents submitted by individuals engaging in official travel as well as documents issued by the Corporation officials involved with authorizing and managing travel.

EXEMPTION CLAIMED FOR THE SYSTEM:

None.

CORPORATION—17

SYSTEM NAME:

Vendor Name and Identification Number Files.

SYSTEM LOCATION:

Office of Accounting and Financial Management Services, Corporation for National and Community Service, 1201 New York Avenue, NW, Washington, DC 20525.

CATEGORIES OF INDIVIDUALS COVERED BY THE SYSTEM:

All individuals with whom the Corporation does business.

CATEGORIES OF RECORDS IN THE SYSTEM:

The data recorded includes the name, the taxpayer identification number, and the address of the entity.

AUTHORITY FOR MAINTENANCE OF THE SYSTEM:

The Domestic Volunteer Service Act of 1973, as amended; the National and Community Service Act of 1990, as amended, and the Budget and Accounting Procedures Act of 1950, as amended.

PURPOSE(S):

To maintain a single list of all entities with which the agency does business.

ROUTINE USES OF RECORDS MAINTAINED IN THE SYSTEM, INCLUDING CATEGORIES OF USERS AND THE PURPOSES OF SUCH USES:

Data may be disclosed to the U.S. Department of Justice, the U.S. Department of the Treasury, or the General Accounting Office in connection with attempting to collect debts or to the Internal Revenue Service in the reporting of disbursements as required by the Internal Revenue Code. Also, see General Routine Uses contained in Preliminary Statement.

POLICIES AND PRACTICES FOR STORING, RETRIEVING, ACCESSING, RETAINING AND DISPOSING OF RECORDS IN THE SYSTEM:

STORAGE:

Data is stored on magnetic media in a computer system with access controlled by a security system that requires passwords and identification of each user.

RETRIEVABILITY:

Data can be retrieved by taxpayer identification number.

SAFEGUARDS:

Access to data stored on magnetic media is controlled by a security system that requires password and identification of each user.

RETENTION AND DISPOSAL:

Records are held for three (3) years and then retired to the Federal Records Center.

SYSTEM MANAGER(S) AND ADDRESS:

Director, Office of Accounting and Financial Management Services, Corporation for National and Community Service, 1201 New York Avenue, NW, Washington, DC 20525.

NOTIFICATION PROCEDURE:

To determine whether there is a record in the system of records about an individual, that individual should submit a request in writing to the System Manager giving name, taxpayer identification number, and address.

RECORD ACCESS PROCEDURES:

See Notification procedures.

CONTESTING RECORD PROCEDURES:

Anyone desiring to contest or amend information contained in this system should write to the System Manager and set forth the basis for which the record is believed to be incomplete or incorrect.

RECORD SOURCE CATEGORIES:

Data in this system is obtained from documents submitted by individuals covered by the system as well as documents issued by the Corporation officials involved with managing funds.

EXEMPTION CLAIMED FOR THE SYSTEM:

None.

CORPORATION—18

SYSTEM NAME:

AmeriCorps*VISTA Member Payroll System File.

SYSTEM LOCATION:

Office of Accounting and Financial Management Services, AmeriCorps*VISTA Payroll Office, Corporation for National and Community Service, 1201 New York Avenue, NW, Washington, DC 20525.

CATEGORIES OF INDIVIDUALS COVERED BY THE SYSTEM:

Current and former AmeriCorps*VISTA members.

CATEGORIES OF RECORDS IN THE SYSTEM:

Records include name, address, social security number, data concerning the individual's sex, marital status, skills, service as an AmeriCorps*VISTA member, including dates served and projects served, amounts paid to the member while serving, amounts overpaid, and repayment records of such overpayment.

AUTHORITY FOR MAINTENANCE OF THE SYSTEM:

The Domestic Volunteer Service of 1973, as amended, and the Budget and Accounting Procedures Act of 1950, as amended.

PURPOSE(S):

To record payments and allowances to AmeriCorps*VISTA members.

ROUTINE USES OF RECORDS MAINTAINED IN THE SYSTEM, INCLUDING CATEGORIES OF USERS AND THE PURPOSES OF SUCH USES:

See General Routine Uses contained in Preliminary Statement. Information is also disclosed to the Social Security Administration and the Internal Revenue Service about the funds paid to comply with legal requirements that enable these agencies to perform their functions. Data from the system is also disclosed to the Financial Management Service of the U.S. Department of the Treasury to enable payments to be made.

POLICIES AND PRACTICES FOR STORING, RETRIEVING, ACCESSING, RETAINING AND DISPOSING OF RECORDS IN THE SYSTEM:

STORAGE:

Manual data is stored alphabetically in locked filing cabinets that are kept in a room that is only used for storing such materials. That room is kept locked except when employees who work with the AmeriCorps*VISTA member payroll system are using the data. Access by all other individuals is not allowed. Data is also stored on magnetic media in a computer system with access controlled by a security system that requires passwords and identification of each user.

RETRIEVABILITY:

Data can be retrieved by individual name for manual records or by social security number for automated records.

SAFEGUARDS:

The storage room is kept locked except when employees who work with the AmeriCorps*VISTA member payroll system are using the data. Access by all other individuals is not allowed. Access to data stored on magnetic media is controlled by a security system that requires passwords and identification of each user.

RETENTION AND DISPOSAL:

Records are held for three (3) years and then retired to the Federal Records Center.

SYSTEM MANAGER(S) AND ADDRESS:

Director, Office of Accounting and Financial Management Services, Corporation for National and Community Service, 1201 New York Avenue, NW, Washington, DC 20525.

NOTIFICATION PROCEDURE:

To determine whether there is a record in the system of records about an individual, that individual should submit a request in writing to the System Manager giving name, taxpayer identification number, and address.

RECORD ACCESS PROCEDURES:

See Notification procedure.

CONTESTING RECORD PROCEDURES:

Anyone desiring to contest or amend information contained in this system should write to the System Manager and set forth the basis for which the record is believed to be incomplete or incorrect.

RECORD SOURCE CATEGORIES:

Data in this system is obtained from documents submitted by individuals covered by the system as well as documents issued by Corporation officials involved with managing funds.

EXEMPTION CLAIMED FOR THE SYSTEM:

None.

Dated: February 25, 1999.

Thomas L. Bryant,

Acting General Counsel.

[FR Doc. 99–5142 Filed 3–4–99; 8:45 am]

BILLING CODE 6050–28–P

federal register

Friday
March 5, 1999

Part VI

Office of Management and Budget

Management of Federal Information Resources; Notice

OFFICE OF MANAGEMENT AND BUDGET

Management of Federal Information Resources

AGENCY: Office of Management and Budget, Executive Office of the President.

ACTION: Proposed Implementation of the Government Paperwork Elimination Act.

SUMMARY: The Office of Management and Budget (OMB) requests public and agency comment on proposed procedures and guidance to implement the Government Paperwork Elimination Act (GPEA). Under the GPEA, agencies must generally provide for the optional use and acceptance of electronic documents and signatures, and electronic record keeping where practicable, by October 2003.

DATES: Persons who wish to comment on the GPEA procedures and guidance should submit their comments no later than July 5, 1999. Each Department and Agency is asked to submit a single coordinated set of comments.

ADDRESSES: Electronic comments will be included as part of the official record. Please send comments electronically to: gpea@omb.eop.gov. Alternatively, hardcopy comments may be addressed to: Information Policy and Technology Branch, Office of Information and Regulatory Affairs, Office of Management and Budget, Room 10236 New Executive Office Building, Washington, D.C. 20503.

ELECTRONIC AVAILABILITY: This document is available on the Internet in the OMB library of the ''Welcome to the White House'' home page, http://www.whitehouse.gov/WH/EOP/OMB/, the CIO Council's home page, http://cio.gov, and at the Government Information Technology Services Board's security home page at http://gits-sec.treas.gov.

FOR FURTHER INFORMATION CONTACT: Peter Weiss, Information Policy and Technology Branch, (202) 395–3630. Press inquiries should be addressed to the OMB Communications Office, (202) 395–7254.

SUPPLEMENTARY INFORMATION: Public confidence in the security of the government's electronic information and information technology is essential in creating government services that are more accessible, efficient, and easy to use. Electronic commerce, electronic mail, and electronic benefits transfer sensitive information within government, between the government and private industry or individuals, and among governments. These electronic systems must protect the information's confidentiality, assure that the information is not altered in an unauthorized way, and be available when needed. A corresponding policy and management structure must support these protections.

In a major step in this direction, the Congress recently enacted legislation, supported by the Administration, intended to increase the ability of citizens to interact with the Federal government electronically. The Government Paperwork Elimination Act, Title XVII of Pub. L. 105–277, provides for Federal agencies, by October 21, 2003, to give persons who are required to maintain, submit, or disclose information the option of doing so electronically when practicable as a substitute for paper, and to use electronic authentication (electronic signature) methods to verify the identity of the sender and the integrity of electronic content. The Act specifically provides that electronic records and their related electronic signatures are not to be denied legal effect, validity, or enforceability merely because they are in electronic form.

OMB's proposed implementation of the Act is in two parts. The first part sets forth the policies and procedures for implementing the Act, and requesting certain specific agencies to provide assistance in particular areas. The second part is intended to provide Federal managers with practical implementation guidance.

OMB requests comments on the proposed procedures and guidance.

Donald Arbuckle,

Deputy Administrator and Acting Administrator, Office of Information and Regulatory Affairs.

Proposed OMB Procedures and Guidance on Implementing the Government Paperwork Elimination Act

This provides Executive agencies with the guidance needed to implement the Government Paperwork Elimination Act (GPEA), Pub. L. 105–277, Title XVII, which took effect on October 21, 1998. The GPEA is an important tool to fulfill the Administration's vision of improved customer service and governmental efficiency through the use of information technology. This vision, articulated in Vice President Gore's 1997 report, Access America (http://gits.gov), involves widespread use of the Internet, with Federal agencies transacting business electronically, in the same way as commercial enterprises. Those who wished to do business in this way could avoid traveling to government offices, waiting in line, or mailing paper forms. Delivery of government services in this way would normally save the government time and money as well.

Access America recognized, however, that:

Public confidence in the security of the government's electronic information and information technology is essential to creating government services that are more accessible, efficient, and easy to use. Electronic commerce, electronic mail, and electronic benefits transfer sensitive information within government, between governments and private industry or individuals, and among governments. These electronic systems must protect the information's confidentiality, assure that the information is not altered in an unauthorized way, and be available when needed.

Part I. Policy and Procedures

Section 1. Policy

The GPEA charges the Office of Management and Budget, in consultation with the Commerce Department and other appropriate entities, with the development of procedures for Executive agencies to follow in using and accepting electronic documents and signatures. These procedures reflect and are to be executed with due consideration of the following policies:

a. Maintaining compatibility with standards and technology for electronic signatures generally used in commerce and industry and by State governments;

b. not inappropriately favoring one industry or technology;

c. ensuring that electronic signatures are as reliable as is appropriate for the purpose in question and that electronic record keeping systems reliably preserve the information submitted;

d. providing wherever appropriate for the electronic acknowledgment of electronic filings that are successfully submitted; and

e. providing, to the extent feasible and appropriate, for multiple methods of electronic signatures or identifiers for the submission of such forms where the agency anticipates receipt of 50,000 or more electronic submittals of a particular form.

Section 2. Procedures

a. The GPEA recognizes that adoption of electronic systems should be consistent with the need to ensure that investments in information technology are economically prudent to accomplish the agency's mission and give due regard to privacy and security.

Moreover, it is Administration policy that a decision to not allow the option of electronic filing and record keeping should be supported by a specific showing that, in the context of a particular application, there is no reasonably cost-effective combination of technologies and management controls that can minimize the risk of significant harm. Accordingly, agencies should develop and implement plans to use and accept documents in electronic form, and engage in electronic transactions.

b. An agency's determination of which technology is appropriate for a given transaction must include a risk assessment, and an evaluation of targeted customer or user needs. Performing a risk assessment to evaluate electronic signature alternatives should not be viewed as an isolated activity or an end in itself. These agency risk assessments should draw from and feed into the interrelated requirements of the Paperwork Reduction Act, the Computer Security Act, the Government Performance and Results Act, the Clinger-Cohen Act, the Federal Managers Financial Integrity Act, and the Chief Financial Officers Act.

c. The initial use of the risk assessment is to identify and mitigate risks in the context of available technologies and their relative total costs and effects on the program being analyzed. The assessment also should be used to develop baselines and verifiable performance measures that track the agency's mission, strategic plans, and tactical goals.

d. The analysis of costs and benefits should be designed so that it can be used, not only as a guide to selecting among the technologies under consideration, but also to generate a business case and verifiable return on investment to support decisions regarding overall programmatic direction, investment decisions, and budgetary priorities. The effects on the public and its needs and readiness to move to an electronic environment are important considerations.

Section 3. Agency Responsibilities

a. In order to ensure a smooth and cost-effective transition to a more electronic government providing improved service to the public, each agency shall:

1. Include in its strategic IT plans supporting program responsibilities (required under OMB Circular A–11) a summary of the agency's schedule to implement optional electronic maintenance, submission, or disclosure of information when practicable as a substitute for paper, including through the use of electronic signatures when practicable, by the end of Fiscal Year 2003 (note: agencies need not revise their reports on Federal purchasing and payment already required by OMB M–99–02, but should include the automation of purchasing and payment functions in their schedule);

2. consider whether an appropriate combination of information security practices, authentication technologies and management controls for each application will be practicable, and if so, which combination will minimize risk and maximize benefits in a cost effective manner;

3. promulgate or amend regulations or policies as necessary and appropriate to: (1) Implement optional electronic submission, maintenance, or disclosure of information, and the use of any necessary electronic signature alternatives; and (2) permit private employers who have record keeping responsibilities imposed by the Federal government to electronically store and file information pertaining to their employees electronically;

4. maintain appropriate information system confidentiality and security in accordance with the guidance contained OMB Circular A–130, Appendices I and III, and use, to the maximum extent practicable, technologies either prescribed in Federal Information Processing Standards promulgated by the Secretary of Commerce or supported by voluntary consensus standards as defined in OMB Circular A–119;

5. provide, to the extent feasible and appropriate, more than one electronic signature option for public reporting forms which are collected annually in electronic form from more than 50,000 respondents; and

6. report progress against the strategic plans developed in response to 1. above through the annual agency reports submitted to OMB under the Paperwork Reduction Act, including any determination that a particular application is inappropriate for conversion to electronic filing.

(b) Department of Commerce.

The Department of Commerce shall promulgate Federal Information Processing Standards as appropriate to further the specific goals of the GPEA. The Department should also develop best practices in the area of authentication technologies and implementations, including cryptographic digital signature technology, with assistance from the Government Information Technology Services Board, the Chief Information Officers Council and the President's Management Council.

(c) Department of the Treasury.

The Department of the Treasury shall prescribe policies and practices for the use of electronic authentication techniques in Federal payments and collections, and ensure that they fulfill the the goals of GPEA.

(d) Department of Justice.

The Department of Justice shall develop and publish practical guidance on legal considerations related to agency use of electronic filing and record keeping.

(e) General Services Administration.

The General Services Administration shall support agencies' implementation of electronic signatures and related electronic service delivery.

Part II. Paperwork Elimination Through the Use of Electronic Signatures and Electronic Record Keeping

This part provides Federal managers with basic information to assist in planning for an orderly and efficient transition to electronic government. Agencies should begin their planning promptly to ensure compliance with the timetable in the GPEA.

Section 1. Introduction and Background

a. As required by the Government Paperwork Elimination Act (GPEA), this Part provides guidance for agencies to use in deciding whether to use electronic signature technology for an application, which electronic signature technology may be most appropriate, and how to minimize the risk of fraud, error, or misuse when implementing an electronic signature technology to authenticate electronic transactions. These procedures are consistent with the requirement of the Paperwork Reduction Act of 1995 (PRA) that agencies shall ''consistent with the Computer Security Act of 1987 (CSA)(40 U.S.C. 759 note), identify and afford security protections commensurate with the risk and magnitude of the harm resulting from the loss, misuse, or unauthorized access to or modification of information collected or maintained by or on behalf of an agency.'' 44 U.S.C. 3506(g)(3).

b. As the GPEA, PRA, and CSA recognize, the goal of information security is to protect the integrity of electronic records and transactions. Different security approaches offer varying levels of assurance in an electronic environment. Among these approaches (in an ascending level of assurance) are (1) the so-called ''shared secrets'' methods, e.g., personal identification numbers or passwords, (2) digitized signatures or biometric means of identification such as fingerprints or retinal patterns and voice recognition,

and (3) digital signatures. Combinations of approaches (e.g., digital signatures with biometrics) are also possible and may provide even higher levels of assurance. Deciding which to use in an application depends upon the risks associated with the loss, misuse or compromise of the information compared to the cost and effort associated with deploying and managing the increasingly secure methods to mitigate those risks. Agencies must strike a balance, recognizing that achieving absolute security is likely to be in most cases highly improbable and prohibitively expensive.

Section 2. What Is an ''Electronic Signature?''

a. The GPEA defines ''electronic signature'' as follows:

> A method of signing an electronic message that—
> (A) Identifies and authenticates a particular person as the source of the electronic message; and
> (B) Indicates such person's approval of the information contained in the electronic message. (GPEA, section 1709(1)).

This definition should be interpreted by reference to accepted legal definitions of signatures. The term ''signature'' has long been understood as including ''any symbol executed or adopted by a party with present intention to authenticate a writing.'' (Uniform Commercial Code, 1–201(39)(1970)). These flexible definitions permit the use of different electronic signature technologies, such as digital signatures, digitized signatures or biometrics, discussed below. For this reason, while it is the case that, for historical reasons, the Federal Rules of Evidence are tailored to the admissibility of paper-based evidence, the Rules of Evidence have no bias against electronic evidence.

b. In enacting the GPEA, Congress addressed the legal effect and validity of electronic signatures or other electronic authentication:

> Electronic records submitted or maintained in accordance with procedures developed under this title, or electronic signatures or other forms of electronic authentication used in accordance with such procedures, shall not be denied legal effect, validity, or enforceability because such records are in electronic form. (GPEA, section 1707).

Section 3. Risk Factors To Consider In Planning and Implementing an Electronic Signature or Record Keeping System

Electronic signature technologies can offer degrees of confidence in authenticating identity greater even than the presence of a handwritten signature. These digital tools should be used to control risks in a cost-effective manner. In determining whether an electronic signature is sufficiently reliable for a particular purpose, agencies should consider the relationships between the parties, the value of the transaction, and the likely need for accessible, persuasive information regarding the transaction at some later date. Once these factors are considered separately, an agency should consider them together to evaluate its sensitivity to risk for a particular process.

a. *The relationship between the parties.* Agency transactions fall into five general categories, each of which may be vulnerable to different security risks:

(1) Intra-agency transactions (i.e., those which remain within the same Federal agency).

(2) Inter-agency transactions (i.e., those between Federal agencies).

(3) Transactions between a Federal agency and state or local government agencies.

(4) Transactions between a Federal agency and a private organization—contractor, university, non-profit organization, or other entity.

(5) Transactions between a Federal agency and a member of the general public.

Inter- or intra-governmental transactions of a relatively routine nature will generally entail little risk of a trading partner later repudiating the transaction, and almost no risk of the trading partner committing fraud. Similarly, transactions between a regulatory agency and a publicly traded corporation or other known entity regulated by that agency bear a relatively low risk of repudiation or fraud. Risk also tends to be relatively low in cases where there is an ongoing relationship between the parties. On the other hand, a one-time transaction between a person and an agency, which has legal or financial implications, bears the highest risk. In all cases, the relative value of the transaction needs to be considered.

b. *The value of the transaction.* Agency transactions fall into five general categories, each of which may be vulnerable to different security risks:

(1) Transactions involving the transfer of funds.

(2) Transactions where the parties commit to actions or contracts that may give rise to financial or legal liability.

(3) Transactions involving information protected under the Privacy Act or other agency-specific statutes obliging that access to the information be restricted.

(4) Transactions where the party is fulfilling a legal responsibility which, if not performed, creates a legal liability (criminal or civil).

(5) Transactions where no funds are transferred, no financial or legal liability is involved and no privacy or confidentiality issues are involved (electronic signatures are least necessary in these transactions and should not be used unless specifically required by law or regulation).

c. *The likely need for accessible, persuasive information regarding the transaction at a later point.* Agency transactions fall into five general categories:

(1) Transactions where the information generated will never be needed again.

(2) Transactions where the information generated may later be subject to audit.

(3) Transactions where the information generated may later be subject to dispute by one of the parties (or alleged parties) to the transaction.

(4) Transactions where the information generated may later be subject to dispute by a non-party to the transaction.

(5) Transactions where the information generated may later be needed as proof in court.

d. *Synthesizing the Risk Factors.*

(1) To evaluate the suitability of electronic signature alternatives for a particular application, the agency needs to perform a qualitative risk analysis and should then determine the particular technologies and management controls best suited to minimizing the risk to an acceptable level while maximizing the benefits to the parties involved.

(2) Risk analyses must recognize that no signature alternative is totally reliable and secure. Every method of signature, whether electronic or paper, can be compromised to some degree with enough technology or due to poor security procedures or practices. In estimating the cost of any system, agencies should include costs associated with hardware, software, administration and support of the system, both short-term and long-term. If it would be extremely expensive to set up a very secure system, but past experience with fraud risks and a careful analysis of those risks shows that exposure is low, a less expensive system that deters the majority of fraud is probably warranted. However, in making this tradeoff, agencies should: (a) Evaluate whether the security elements of a less expensive system can be disproportionately exploited resulting in greater exposure to fraud than would be expected in

comparable non-automated systems; and (b) consider management and other non-technical process controls which could reduce those risks.

(3) A qualitative risk analysis also should recognize that all risks and benefits are not quantifiable. While some transactions can be assigned a definite monetary value that may be placed at risk, many cannot. For example, the value of deterring fraud cannot generally be quantified. Should an agency conclude that a new automated system is less secure than an old, paper-based system, attempts to commit fraud or to repudiate transactions may increase. On the benefit side, it is not always possible to assign a dollar value to the increased efficiency that an agency experiences when it automates a labor-intensive process, although agencies should attempt to make this estimation whenever feasible. Usually, it is not possible to quantify in monetary terms attitudes such as increased customer satisfaction and willingness to cooperate with an agency, which are engendered by the transition from onerous paper processes to user-friendly electronic processes.

(4) One advantage of electronic authentication is that an agency may strengthen the signature validation by incorporating electronic links between the user and preexisting data about that user in the agency's records. The IRS has successfully adopted this approach in its TeleFile program, which enables selected taxpayers to file 1040EZs with a touch-tone phone. Taxpayers get Customer Service Numbers (CSNs, i.e., PINs) that they then use to sign their returns and which help to validate their identities to the agency. Even though a CSN is not unique to an individual taxpayer (since it is only five digits long), the IRS authenticates the filer by using other identifying factors, such as the taxpayer's date of birth, taxpayer identification number, and by using additional procedures. This approach is not used over the Internet. Rather, it occurs in short-term connections over telephone lines, an environment where it is comparatively difficult for malefactors to eavesdrop and to steal information or to substitute false information for fraudulent purposes.

(5) The Computer Security Act places on agency managers the responsibility to select an appropriate combination of technologies and practices to minimize risk cost-effectively while maximizing benefits to the agency and to its customers. These decisions, however qualitative, should be documented for later review and adjustment.

Section 4. Privacy and Disclosure

Section 1708 of the GPEA limits the use of information collected in electronic signature services for communications with a Federal agency. It directs agencies and their staff and contractor personnel not to such use information for any purpose other than for facilitating the communication. Exceptions exist if the person (or entity) who is the subject of the information provides affirmative consent to the additional use of the information, or if such additional use is otherwise provided by law. Accordingly, agencies should follow several privacy tenets:

a. Electronic authentication should only be required where needed. Many transactions do not need, and should not require, detailed information about the individual.

b. When electronic authentication is required for a transaction, do not collect more information from the user than is required for the application.

c. Users should be able to decide the scope of their electronic means of authentication. In other words, if a user wants a certain mechanism for authentication to work only with a single agency or for a single type of transaction, the user's desires should be honored if practicable. Conversely, if the user wishes to have the authentication work with multiple agencies or for multiple types of transactions, that should also be permitted consistent with how the agency employs such means of authentication and with relevant statute and regulation.

d. Agencies should ensure, and users should be informed, that information collected for the purpose of issuing or using electronic means of authentication will be managed and protected in accordance with applicable requirements under the Privacy Act, the Computer Security Act, and any agency-specific statutes mandating the protection of such information.

Section 5. Overview of Current Electronic Signature Technologies

This section addresses two categories of security: (1) Non-cryptographic methods of authenticating identity; and (2) cryptographic control methods. The non-cryptographic approach relies solely on an identification and authentication mechanism linked to a specific software application. Cryptographic controls can be used for multiple applications, if properly managed, and encompass authentication and encryption services. A highly secure implementation may combine both categories of technologies. The spectrum of electronic signature technologies currently available is described below.

a. Non-Cryptographic Methods of Authenticating Identity

(1) *Personal Identification Number (PIN) or password:* A user accessing an agency's electronic application is requested to enter a ''shared secret'' (called ''shared'' because it is known both to the user and to the system), such as a password or PIN. When the user of a system enters her name, she also enters a password or PIN. The system checks that password or PIN as a shared secret to ''authenticate'' the user. If the authentication process is performed over an open network such as the Internet, it is usually essential that at least the shared secret be encrypted; this can be accomplished through the technology called ''Secure Sockets Layer'' currently built into almost all popular Web browsers, in a fashion that is transparent to the end user.

(2) *Smart Card:* A smart card is a plastic card the size of a credit card which contains an embedded chip that can generate, store, and/or process data. It can be used to facilitate various authentication technologies. A user inserts the smart card into a card reader device attached to a microcomputer or network input device. In the computer, information from the card's chip is read by security software only when the user enters a PIN, password, or biometric identifier. This method provides greater security than use of a PIN alone, because a user must have both (a) physical possession of the smart card and (b) knowledge of the PIN. Good security requires that the smart card and the PIN never be kept together. Note that the PIN, password or biometric identifier in this case is a secret shared between the user and the smart card, not between the user and a local or remote computer.

(3) *Digitized Signature:* A digitized signature is a graphical image of a handwritten signature. Some applications require a user to create his or her hand-written signature using a special computer input device, such as a digital pen and pad. The digitized representation of the entered signature is compared with a stored copy of the graphical image of the handwritten signature. If special software considers both images comparable, the signature is considered valid. This application of technology shares the same security issues as those using the PIN or password approach, because the digitized signature is another form of shared secret known both to the user and to the system. The digitized signature is more reliable for

authentication than a password or PIN because there is a biometric component to the creation of the image of the handwritten signature. Forging a digitized signature can be more difficult than forging a paper signature to the extent that the technology digitally compares the submitted signature image with the known signature image, and is better than the human eye. Another element in a digitized signature which helps make it unique is measuring how each stroke is made—its duration or pen pressure, for example. This information can also be compared to a reference value. As with all shared secret techniques, compromise of a digitized signature image file could pose a security risk to users.

(4) *Biometrics:* Individuals have unique physical characteristics that can be converted into digital form and then interpreted by a computer. Among these are voice patterns (where an individual's spoken words are converted into a special electronic representation), fingerprints, and the blood vessel patterns present on the retina (or rear) of one or both eyes. In this technology, the physical characteristic is measured (by a microphone, optical reader, or some other device), converted into digital form, and then compared with a copy of that characteristic stored in the computer and authenticated beforehand as belonging to a particular person. If the test pattern and the previously stored patterns are sufficiently close (to a degree which is usually selectable by the authenticating application), the authentication will be accepted by the software, and the transaction allowed to proceed. Biometric applications can provide very high levels of authentication especially when the identifier is obtained in the presence of a third party (making spoofing difficult), but as with any shared secret, if the digital form is compromised, impersonation becomes a serious risk. Thus, just like PINs, such information should not be sent over open networks unless it is encrypted. Moreover, measurement and recording of a physical characteristic can raise privacy concerns.

b. Cryptographic Control

Creating electronic signatures may involve the use of cryptography in two ways: symmetric (or shared private key) cryptography, or asymmetric (public key/private key) cryptography. The latter is used in producing digital signatures, discussed further below.

(1) *Shared Private Key Cryptography.* In shared private key (symmetric) approaches, the user signs a document and verifies the signature using a single key (consisting of a long string of zeros and ones) that is not publicly known, or is secret. Since the same key does these two functions, it must be transferred from the signer to the recipient of the message. This situation can undermine confidence in the authentication of the user's identity because the private key is shared between sender and recipient and therefore is no longer unique to one person. Since the private key is shared between the sender and possibly many recipients, it is really not ''private'' to the sender and hence has lesser value as an authentication mechanism. This approach offers no additional cryptographic strength over digital signatures (see below). Further, digital signatures avoid the need for the shared secret.

(2) *Public/Private Key (Asymmetric) Cryptography—Digital Signatures.* (a) To produce a digital signature, a user has his or her computer generate two mathematically linked keys—a private signing key that is kept private, and a public validation key that is available to the public. The private key cannot be deduced from the public key. In practice, the public key is made part of a ''digital certificate,'' which is a specialized electronic document digitally signed by the issuer of the certificate, binding the identity of the individual to his or her private key in an unalterable fashion.

(b) A ''digital signature'' is created when the owner of a private signing key uses that key to create a unique mark (called a ''signed hash'') on an electronic document or file. The recipient employs the owner's public key to validate the authenticity of the attached private key. This process also verifies that the document was not altered. Since the two keys are mathematically linked, they are unique: only one public key will validate signatures made using its corresponding private key. Moreover, if the private key has been properly protected from compromise or loss, the signature is unique to the individual who owns it, that is, the owner is bound by the signature. One concern in relatively high-risk transactions is that the private key owner could feign loss to repudiate a transaction. This concern can be mitigated by encoding the private key onto a smart card or an equivalent device, and by using a biometric mechanism (rather than a PIN or password) as the shared secret between the user and the smart card for unlocking the private key to effect a signature. It can also be addressed by agencies establishing clear procedures for a particular implementation, so that all parties know what the obligations, risks and consequences are.

The reliability of the digital signature is directly proportional to the degree of confidence one has in the link between the owner's identity and the digital certificate, how well the owner has protected the private key from compromise or loss, and to the cryptographic strength of the methodology used to generate the key pair. Further information on digital signatures can be found in Access with Trust (http://gits-sec.treas.gov), a report published by OMB and NPR.

c. Technical Considerations of the Various Technologies

(1) While generally the most certain method for assuring identity electronically, use of digital signatures requires agencies to develop a series of policies and documents which provide the important underlying framework of trust and which facilitate the evaluation of risk. The framework identifies how well the signer's identity is bound to his or her public key in a digital certificate (identity proofing); whether the private key is placed on a highly secure hardware token or is encapsulated in software only; and how difficult it is for a malefactor to deduce using cryptographic methods the private key (the cryptographic strength of the key-generating algorithm).

(2) By themselves, digitized (not digital) signatures, PINs and biometric identifiers do not directly bind identity to the contents of a document. For them to do so, they must be used in conjunction with some other mechanism. Biometric identifiers such as retinal patterns used in conjunction with digital signatures can offer far greater proof of identify than pen and ink signatures.

(3) While not as robust as biometric identifiers and digital signatures, PINs have the decided advantage of proven customer and citizen acceptance, as evidenced by the universal use of PINs for automated teller machine transactions. Such transactions, however, typically occur over proprietary networks rather than open networks like the Internet, where eavesdropping on transactions is much easier, unless the messages are encrypted.

(4) It is important to remember that technical factors are but one aspect to be considered when an agency plans to implement electronic signature-based applications. Other important aspects are considered in the following sections.

Section 6. Agency Implementation of Electronic Signature and Authentication

After the agency has conducted the risk analysis and identified an appropriate electronic signature or other electronic authentication, the agency will then proceed to implement this decision. In doing so, agencies should consider the following:

a. *Develop a regulatory or policy scheme.* Agencies should consider whether their programmatic regulations or policies support the use and enforceability of electronic signature alternatives to handwritten signatures. By clearly informing the regulated community that electronic signatures and records will be acceptable and used for enforcement purposes, their legal standing is enhanced. Several agencies have already promulgated policies and regulations making this clear, and a number are developing them:

Securities and Exchange Commission (17 CFR Part 232), electronic regulatory filings; Environmental Protection Agency (55 FR 31,030 (1990)), policy on electronic reporting;

Food and Drug Administration (21 CFR Part 11), electronic signatures and records; Internal Revenue Service (Treasury Reg. 301.6061–1), signature alternatives for tax filings;

Federal Acquisition Regulation (41 CFR Parts 2 and 4), electronic contracts; General Services Acquisition Regulation (48 CFR Part 552.216–73), electronic orders; Federal Property Management Regulations (41 CFR Part 101–41), electronic bills of lading.

When specifying the requirements for using electronic record keeping by regulated entities (particularly the maintenance of electronic forms pertaining to employees by employers), agencies should consider the ''Performance Guideline for the Legal Acceptance of Records Produced by Information Technology Systems,'' developed by the Association for Information and Image Management (ANSI AIIM TR31). This document provides suggestions for maximizing the likelihood that electronically filed and stored documents will be accorded full legal recognition. If an agency chooses to use digital signatures, a regulation may specify that each individual will be issued a unique digital signature certificate to use, agree to keep the private key confidential, and agree to accept responsibility for anything that is submitted using that key, or other conditions under which the agency will accept electronic submissions using it.

b. *Use a mutually-understood, signed agreement between the person or entity submitting the electronically-signed information and the receiving Federal agency.*

(1) As a matter of efficiency, contractual arrangements with large numbers of trading partners would be best accomplished by setting forth an agency's terms and conditions in a regulation. Arrangements with smaller numbers of trading partners may lend themselves to one or more agreements, using a document referred to as a ''terms and conditions'' agreement. These agreements can ensure that all conditions of submission and receipt of data electronically are known and understood by the submitting parties. This is particularly the case where terms and conditions are not spelled out in agency programmatic regulations.

(2) It is also important to establish that the user of the digital signature or PIN/password is fully aware of what he or she is signing at the time of signature. This can be ensured by programming appropriate ceremonial banners that alert the individual of the gravity of the action into the software application. The presence of such banners can later be used to demonstrate to a court that the user was fully informed of and aware of what he or she was signing.

c. *Minimize the likelihood of repudiation.* Agencies should develop well-documented and established mechanisms and procedures to tie transaction in a legally binding way to an individual. The integrity of even the most secure digital signature rests on the continuing confidentiality of the private key, for example. Similarly, in the case of electronic signatures based on the use of PINs, the integrity of the transaction depends on the user not disclosing the PIN. If a defendant is later charged with a crime based on an electronically signed document, he or she would have every incentive to show a lack of control over (or loss of) the private key or PIN. Indeed, if that defendant plans to commit fraud, he or she may intentionally compromise the secrecy of the key or PIN, so that the government would later be unable to link him or her to the electronic transaction.

Thus, transactions which appear to be at high risk for fraud, e.g., one-time high-value transactions with persons not previously known to an agency, may require extra safeguards or may not be appropriate for electronic transactions. One way to mitigate this risk is to require that private keys be encoded on hardware tokens, making possession of the token a critical requirement. Another way to guard against fraud is to include other identifying data in the transaction that links the key or PIN to the individual, preferably something not readily available to others.

d. *Access to the electronic data, after receipt, needs to be carefully controlled yet available in a meaningful and timely fashion.* Security measures should be in place that ensure that no one is able to alter a transaction, or substitute something in its place, once it has been received by the agency. Thus, the receiving agency needs to take prudent steps to control access to the electronic transaction through such methods as limiting access to the computer database containing the transaction, and performing processing with the data using copies of the transaction rather than the original. Moreover, the information may be needed for audits, disputes, or court cases many years after the transaction itself took place. Agencies should make plans for storing data, and providing meaningful and timely access to it for as long as such access will be necessary.

e. *Ensure the ''Chain of Custody.''* Electronic audit trails must provide a chain of custody for the secure electronic transaction that identifies sending location, sending entity, date and time stamp of receipt, and other measures used to ensure the integrity of the document. These trails must be sufficiently complete and reliable to validate the integrity of the transaction and to prove that, (a) the connection between the submitter and the receiving agency has not been tampered with, and (b) how the document was controlled upon receipt.

f. *Provide an acknowledgment of receipt.* The agency's system for receiving electronic transactions may be required by statute to have a mechanism for acknowledging receipt of transactions received, and acknowledging confirmation of transactions sent, with specific indication of the party with whom the agency is dealing.

g. *Obtain legal counsel during the design of the system.* Collection and use of electronic data may raise legal issues, particularly if it is information that bears on the legality of the process or that may eventually be needed for proof in court.

Section 7. Summary of the Procedures and Checklist

To summarize the process which agencies should employ to evaluate authentication mechanisms (electronic signatures) for electronic transactions and documents, the following steps apply:

1. Examine the current business process that is being converted to employ electronic documents or

transactions, identifying the existing risks associated with fraud, error or misuse, as well as customer needs and demands.

2. Consider what risks may arise from the use of electronic transactions or documents. This evaluation should take into account the relationships of the parties, the value of the transactions or documents, and the later need for the documents.

3. Identify the benefits that accrue from the use of electronic transactions or documents.

4. Consult with counsel about any specific legal implications about the use of electronic transactions or documents in the particular application.

5. Evaluate how each electronic signature alternative may minimize risk compared to the costs incurred in adopting an alternative.

6. Determine whether any electronic signature alternative in conjunction with appropriate process controls represents a practicable trade-off between cost and risk on the one hand, and benefits on the other. If so, determine, to the extent possible at the time, which signature alternative is the best one. Document this determination to allow later evaluation and audit.

7. Develop plans for retaining and disposing of information, ensuring that it can be made continuously available to those who will need it, for managerial control of sensitive data and accommodating changes in staffing, and for ensuring adherence to these plans.

8. Determine if regulations or policies are adequate to support electronic transactions and record keeping, or if ''terms and conditions'' agreements are appropriate for the particular application.

9. Develop plans for seeking the continuing input of technology experts for updates on the changing state of technology and the continuing advice of legal counsel for updates on the changing state of the law in these areas.

10. Integrate these plans into the agency's strategic IT planning and regular reporting to OMB.

11. Perform periodic review and re-evaluation, as appropriate.

[FR Doc. 99–5409 Filed 3–4–99; 8:45 am]

BILLING CODE 3110–01–U

federal register

Friday
March 5, 1999

Part VII

Department of Housing and Urban Development

Family Unification Program Funding Availability for Fiscal Year 1999; Notice

DEPARTMENT OF HOUSING AND URBAN DEVELOPMENT

[Docket No. FR–4414–N–01]

Notice of Funding Availability Family Unification Program Fiscal Year 1999

AGENCY: Office of the Assistant Secretary for Public and Indian Housing, HUD.

ACTION: Notice of Funding Availability (NOFA).

SUMMARY: *Purpose of the Program.* The purpose of the Family Unification Program is to promote family unification by providing housing assistance to families for whom the lack of adequate housing is a primary factor in the separation, or the threat of imminent separation, of children from their families.

Available Funds. The $75 million in one-year budget authority will support approximately 11,200 Section 8 rental vouchers. A provision in the FY 1998 Family Unification Program NOFA indicated that any approvable 1998 applications not funded because of insufficient funds would be funded first with any Family Unification Program appropriations available in FY 1999. Accordingly, these unfunded FY 1998 applications were funded first in FY 1999 in the order in which they were selected in the FY 1998 lottery for the Family Unification Program. After funding these previously unfunded FY 1998 applications, approximately $28.2 million to fund approximately 4,200 units will be available in FY 1999 for new applications for the Family Unification Program.

Eligible Applicants. Public Housing Agencies (PHAs). Indian Housing Authorities, Indian tribes and their tribally designated housing entities are not eligible.

Application Deadline. May 28, 1999.

Match. None.

Additional Information

If you are interested in applying for funding under the Family Unification Program, please read the balance of this NOFA which will provide you with detailed information regarding the submission of an application, Section 8 program requirements, the application selection process to be used in selecting applications for funding, and other valuable information relative to a PHA's application submission and participation in the Family Unification Program.

Application Due Dates and Application Submission

Delivered Applications. The application deadline for delivered applications for the Family Unification Program NOFA is May 28, 1999, 6:00 p.m., local HUD Field Office HUB or local HUD Field Office Program Center time.

This application deadline is firm as to date and hour. In the interest of fairness to all competing PHAs, HUD will not consider any application that is received after the application deadline. Applicants should take this practice into account and make early submission of their materials to avoid any risk of loss of eligibility brought about by unanticipated delays or other delivery-related problems. HUD will not accept, at any time during the NOFA competition, application materials sent via facsimile (FAX) transmission.

Mailed Applications. Applications for the Family Unification Program will be considered timely filed if postmarked before midnight on the application due date and received by the local HUD Field Office HUB or local HUD Field Office Program Center within ten (10) days of that date.

Applications Sent By Overnight Delivery. Overnight delivery items will be considered timely filed for the Family Unification Program if received before or on the application due date, or upon submission of documentary evidence that they were placed in transit with the overnight delivery service by no later than the specified application due date.

Official Place of Application Receipt. The original and a copy of the application for the Family Unification Program must be submitted to the local HUD Field Office HUB, Attention: Director, Office of Public Housing; or to the local HUD Field Office Program Center, Attention: Program Center Coordinator. The local HUD Field Office HUB or local HUD Field Office Program Center is the official place of receipt for all applications received in response to this NOFA. For ease of reference, the term ''local HUD Field Office'' will be used throughout this NOFA to mean the local HUD Field Office HUB or local HUD Field Office Program Center.

For Application Kits, Further Information and Technical Assistance

For Application Kit. An application kit is not available and is not necessary for submitting an application for the Family Unification Program.

For Further Information. For answers to your questions, you have two options. You may contact the local HUD Field Office. You may also contact George C. Hendrickson, Housing Program Specialist, Room 4216, Office of Public and Assisted Housing Delivery, Department of Housing and Urban Development, 451 Seventh Street, SW, Washington, DC 20410; telephone (202) 708–1872, ext. 4064. (This number is not a toll-free number). Persons with hearing or speech impairments may access this number via TTY (text telephone) by calling the Federal Information Relay Service at 1–800–877–8339 (this is a toll free number).

For Technical Assistance. Prior to the application due date, George C. Hendrickson of HUD's Headquarters staff (at the address and telephone number indicated above) will be available to provide general guidance and technical assistance about this NOFA. Current law does not permit HUD staff to assist in preparing the application. Following selection, but prior to award, HUD staff will be available to assist in clarifying or confirming information that is a prerequisite to the offer of an award by HUD.

I. Authority, Purpose, Amount Allocated, and Eligibility

(A) Authority

The Family Unification Program is authorized by section 8(x) of the United States Housing Act of 1937 (42 U.S.C. 1437f(x)). The Department of Veterans Affairs and Housing and Urban Development, and Independent Agencies Appropriations Act, 1999 (Pub.L. 105–276, approved October 21, 1998), hereinafter referred to as the 1999 Appropriations Act) provides funding for the Family Unification Program. Of the approximately $75 million available under this NOFA, approximately $23.4 million are carryover amounts from the Departments of Veterans Affairs and Housing and Urban Development, and Independent Agencies Appropriations Act, 1998 (Pub.L. 105–65, approved October 27, 1997).

(B) Purpose

The Family Unification Program is a program under which Section 8 rental assistance is provided to families for whom the lack of adequate housing is a primary factor which would result in:

(1) The imminent placement of the family's child, or children, in out-of-home care; or

(2) The delay in the discharge of the child, or children, to the family from out-of-home care.

Rental vouchers awarded under the Family Unification Program are administered by PHAs under HUD's

regulations for the Section 8 rental voucher program (24 CFR parts 887 and 982). In prior fiscal years HUD provided funding for rental certificates only for the Family Unification Program. In FY 1999, however, HUD will be providing rental vouchers only for this program. This is due to provisions in the Quality Housing and Work Responsibility Act of 1998 that call for the merging of the Section 8 rental voucher and certificate programs into a rental voucher program. HUD intends to publish an interim rule in the spring of FY 1999 to implement the new rental voucher program. Since successful applicants for the FY 1999 Family Unification Program will not be funded until after the implementation of the interim rule, rental vouchers are being provided this year for the Family Unification Program in lieu of rental certificates.

(C) Amount Allocated

This NOFA announces the availability of approximately $75 million for the Family Unification Program which will provide assistance for about 11,200 families. PHAs with a current Section 8 rental voucher and certificate program of more than 500 units as shown in the most recent HUD-approved program budget may apply for funding for a maximum of 100 units. PHAs with a current Section 8 rental voucher or certificate program of 500 units or less as shown in the most recent HUD-approved program budget may apply for a maximum of 50 units. PHAs not currently administering either a Section 8 rental voucher or certificate program may apply for a maximum of 50 units.

The amounts allocated under this NOFA were be awarded first to those PHAs having submitted approvable applications in FY 1998 but which were not funded due to insufficient funding. (The NOFA for FY 1998's Family Unification Program, FR–4360, provided that unfunded FY 1998 Family Unification Program applications would be funded first in FY 1999 contingent upon available appropriations.) Approximately $46.8 million was required to fund these applications. The balance of approximately $28.2 million in FY 1999 funding for approximately 4,200 units will be awarded under a national competition based on threshold criteria. A national lottery will be conducted to select approvable applications for funding if approvable applications are submitted by PHAs in FY 1999 for more than the approximately $28.2 million available under this NOFA for new applications.

The Family Unification Program is exempt from the fair share allocation requirements of section 213(d) of the Housing and Community Development Act of 1974 (42 U.S.C. 1439(d)) and the implementing regulations at 24 CFR part 791, subpart D.

(D) Eligible Applicants

(1) Family Unification Program Eligibility. Any PHA established pursuant to State law, including regional (multicounty) or State PHAs, may apply for funding under this NOFA. Indian Housing Authorities, Indian tribes and their tribally designated housing entities are not eligible.

(2) Eligibility for HUD-Designated Housing Agencies with Major Program Findings. Some PHAs currently administering the Section 8 rental voucher and certificate programs have, at the time of publication of this NOFA, major program management findings from Inspector General audits, HUD management reviews, or Independent Public Accountant (IPA) audits that are open and unresolved or other significant program compliance problems. HUD will not accept applications for additional funding from these PHAs as contract administrators if, on the application deadline date, the findings are not closed to HUD's satisfaction. If any of these PHAs want to apply for the Family Unification Program, the PHA must submit an application that designates another housing agency, nonprofit agency, or contractor that is acceptable to HUD. The PHA application must include an agreement by the other housing agency or contractor to administer the program for the new funding increment on behalf of the PHA and a statement that outlines the steps the PHA is taking to resolve the program findings. Immediately after the publication of this NOFA, the Office of Public Housing in the local HUD Office will notify, in writing, those PHAs that are not eligible to apply because of outstanding management or compliance problems. The PHA may appeal the decision if HUD has mistakenly classified the PHA as having outstanding management or compliance problems. Any appeal must be accompanied by conclusive evidence of HUD's error (i.e, documentation showing that the finding has been cleared) and must be received prior to the application deadline.

II. General Requirements and Requirements Specific To the Family Unification Program

(A) General Requirements

(1) *Compliance with Fair Housing and Civil Rights Laws.* All applicants must comply with all fair housing and civil rights laws, statutes, regulations, and executive orders as enumerated in 24 CFR 5.105(a). If an applicant: (a) has been charged with a systemic violation of the Fair Housing Act by the Secretary alleging ongoing discrimination; (b) is the defendant in a Fair Housing Act lawsuit filed by the Department of Justice alleging an ongoing pattern or practice of discrimination; or (c) has received a letter of noncompliance findings under Title VI of the Civil Rights Act, section 504 of the Rehabilitation Act of 1973, or section 109 of the Housing and Community Development Act, the applicant's application will not be evaluated under this NOFA if, prior to the application deadline, the charge, lawsuit, or letter of findings has not been resolved to the satisfaction of the Department. HUD's decision regarding whether a charge, lawsuit, or a letter of findings has been satisfactorily resolved will be based upon whether appropriate actions have been taken necessary to address allegations of ongoing discrimination in the policies or practices involved in the charge, lawsuit, or letter of findings.

(2) *Additional Nondiscrimination Requirements.* Applicants must comply with the Americans with Disabilities Act, and Title IX of the Education Amendments Act of 1972. In addition to compliance with the civil rights requirements listed at 24 CFR 5.105, each successful applicant must comply with the nondiscrimination in employment requirements of Title VII of the Civil Rights Act of 1964 (42 U.S.C. 2000e *et seq.*), the Equal Pay Act (29 U.S.C. 206(d)), the Age Discrimination in Employment Act of 1967 (29 U.S.C. 621 *et seq.*), and Titles I and V of the Americans with Disabilities Act (42 U.S.C. 12101 *et seq.*).

(3) *Affirmatively Furthering Fair Housing.* Applicants have a duty to affirmatively further fair housing. Applicants will be required to identify the specific steps that they will take to: (a) address the elimination of impediments to fair housing that were identified in the jurisdiction's Analysis of Impediments (AI) to Fair Housing Choice; (b) remedy discrimination in housing; or (c) promote fair housing rights and fair housing choice.

(4) *Certifications and Assurances.* Each applicant is required to submit signed copies of Assurances and Certifications. The standard Assurances and Certifications are on Form HUD–52515, Funding Application, which includes the Equal Opportunity Certification, Certification Regarding Lobbying, and Certification Regarding Drug-Free Workplace Requirements.

(B) Requirements Specific to the Family Unification Program

(1) *Eligibility.* (a) *Family Unification eligible families.* Each PHA must modify its selection preference system to permit the selection of Family Unification eligible families for the program with available funding provided by HUD for this purpose. The term ''Family Unification eligible family'' means a family that:

(i) The public child welfare agency has certified is a family for whom the lack of adequate housing is a primary factor in the imminent placement of the family's child, or children, in out-of-home care, or in the delay of discharge of a child, or children, to the family from out-of-home care; and

(ii) The PHA has determined is eligible for Section 8 rental assistance.

(b) *Lack of Adequate Housing.* The lack of adequate housing means:

(i) A family is living in substandard or dilapidated housing; or

(ii) A family is homeless; or

(iii) A family is displaced by domestic violence; or

(iv) A family is living in an overcrowded unit.

(c) *Substandard Housing.* A family is living in substandard housing if the unit where the family lives:

(i) Is dilapidated;

(ii) Does not have operable indoor plumbing;

(iii) Does not have a usable flush toilet inside the unit for the exclusive use of a family;

(iv) Does not have a usable bathtub or shower inside the unit for the exclusive use of a family;

(v) Does not have electricity, or has inadequate or unsafe electrical service;

(vi) Does not have a safe or adequate source of heat;

(vii) Should, but does not, have a kitchen; or

(viii) Has been declared unfit for habitation by an agency or unit or government.

(d) *Dilapidated Housing.* A family is living in a housing unit that is dilapidated if the unit where the family lives does not provide safe and adequate shelter, and in its present condition endangers the health, safety, or well-being of a family, or the unit has one or more critical defects, or a combination of intermediate defects in sufficient number or extent to require considerable repair or rebuilding. The defects may result from original construction, from continued neglect or lack of repair or from serious damage to the structure.

(e) *Homeless.* A homeless family includes any person or family that:

(i) Lacks a fixed, regular, and adequate nighttime residence; and

(ii) Has a primary nighttime residence that is:

—A supervised publicly or privately operated shelter designed to provide temporary living accommodations (including welfare hotels, congregate shelters, and transitional housing);

—An institution that provides a temporary residence for persons intended to be institutionalized; or

—A public or private place not designed for, or ordinarily used as, a regular sleeping accommodation for human beings.

(f) *Displaced by Domestic Violence.* A family is displaced by domestic violence if:

(i) The applicant has vacated a housing unit because of domestic violence; or

(ii) The applicant lives in a housing unit with a person who engages in domestic violence.

(iii) ''Domestic violence'' means actual or threatened physical violence directed against one or more members of the applicant family by a spouse or other member of the applicant's household.

(g) *Involuntarily Displaced.* For a family to qualify as involuntarily displaced because of domestic violence:

(i) The PHA must determine that the domestic violence occurred recently or is of a continuing nature; and

(ii) The applicant must certify that the person who engaged in such violence will not reside with the family unless the HA has given advance written approval. If the family is admitted, the PHA may terminate assistance to the family for breach of this certification.

(h) *Living in Overcrowded Housing.* A family is considered to be living in an overcrowded unit if:

(i) The family is separated from its child (or children) and the parent(s) are living in an otherwise standard housing unit, but, after the family is re-united, the parents' housing unit would be overcrowded for the entire family and would be considered substandard; or

(ii) The family is living with its child (or children) in a unit that is overcrowded for the entire family and this overcrowded condition may result in the imminent placement of its child (or children) in out-of-home care.

For purpose of this paragraph (h), the PHA may determine whether the unit is ''overcrowded'' in accordance with PHA subsidy standards.

(i) *Detained Family Member.* A Family Unification eligible family may not include any person imprisoned or otherwise detained pursuant to an Act of the Congress or a State law.

(j) *Public child welfare agency (PCWA).* PCWA means the public agency that is responsible under applicable State law for determining that a child is at imminent risk of placement in out-of-home care or that a child in out-of-home care under the supervision of the public agency may be returned to his or her family.

(2) *PHA Responsibilities.* PHAs must:

(a) Accept families certified by the PCWA as eligible for the Family Unification Program. The PHA, upon receipt of the PCWA list of families currently in the PCWA caseload, must compare the names with those of families already on the PHA's Section 8 waiting list. Any family on the PHA's Section 8 waiting list that matches with the PCWA's list must be assisted in order of their position on the waiting list in accordance with PHA admission policies. Any family certified by the PCWA as eligible and not on the Section 8 waiting list must be placed on the waiting list. If the PHA has a closed Section 8 waiting list, it must reopen the waiting list to accept a Family Unification Program applicant family who is not currently on the PHA's Section 8 waiting list;

(b) Determine if any families with children on its waiting list are living in temporary shelters or on the street and may qualify for the Family Unification Program, and refer such applicants to the PCWA;

(c) Determine if families referred by the PCWA are eligible for Section 8 assistance and place eligible families on the Section 8 waiting list;

(d) Amend the administrative plan in accordance with applicable program regulations and requirements;

(e) Administer the rental assistance in accordance with applicable program regulations and requirements; and

(f) Assure the quality of the evaluation that HUD intends to conduct on the Family Unification Program and cooperate with and provide requested data to the HUD office or HUD-approved contractor responsible for program evaluation.

(3) *Public Child Welfare Agency (PCWA) Responsibilities.* A public child welfare agency that has agreed to participate in the Family Unification Program must:

(a) Establish and implement a system to identify Family Unification eligible families within the agency's caseload and to review referrals from the PHA;

(b) Provide written certification to the PHA that a family qualifies as a Family Unification eligible family based upon the criteria established in section 8(x) of the United States Housing Act of 1937, and this notice;

(c) Commit sufficient staff resources to ensure that Family Unification eligible families are identified and determined eligible in a timely manner and to provide follow-up supportive services after the families lease units; and

(d) Cooperate with the evaluation that HUD intends to conduct on the Family Unification Program, and submit a certification with the PHA's application for Family Unification funding that the PCWA will agree to cooperate with and provide requested data to the HUD office or HUD-approved contractor having responsibility for program evaluation.

(4) *Section 8 Rental Voucher Assistance.* The Family Unification Program provides funding for rental assistance under the Section 8 rental voucher program.

PHAs must administer this program in accordance with HUD's regulations governing the Section 8 rental voucher program. If Section 8 rental assistance for a family under this program is terminated, the rental assistance must be reissued to another Family Unification eligible family for 5 years from the initial date of execution of the Annual Contributions Contract subject to the availability of renewal funding.

III. Application Selection Process For Funding

(A) Rating and Ranking

HUD's local HUD Field Offices are responsible for rating the applications for the selection criteria established in this NOFA, and are responsible for selection of FY 1999 applications that will receive consideration for assistance under the Family Unification Program. The local HUD Field Offices will initially screen all applications and determine any technical deficiencies based on the application submission requirements.

Each application submitted in response to the NOFA, in order to be eligible for funding, must receive at least 20 points for Threshold Criterion 2, Efforts of PHA to Provide Area-Wide Housing Opportunities for Families. Each application must also meet the requirements for Threshold Criterion 1, Unmet Housing Needs; Threshold Criterion 3, Coordination between HA and Public Child Welfare Agency to Identify and Assist Eligible Families; and Threshold Criterion 4, Public Child Welfare Agency Statement of Need for Family Unification Program.

(B) Threshold Criteria

(1) Threshold Criterion 1: Unmet Housing Needs

This criterion requires the PHA to demonstrate the need for an equal or greater number of Section 8 rental vouchers than it is requesting under this NOFA. The PHA must assess and document the unmet housing need for its geographic jurisdiction of families for whom the lack of adequate housing is a primary factor in the imminent placement of the family's child or children in out-of-home care, or in a delay of discharge of a child or children to the family from out-of-home care. The results of the assessment must include a comparison of the estimated unmet housing needs of such families to the Consolidated Plan covering the PHA's jurisdiction.

(2) Threshold Criterion 2: Efforts of PHA to Provide Area-Wide Housing Opportunities for Families (60 Points)

(a) *Description:* Many PHAs have undertaken voluntary efforts to provide area-wide housing opportunities for families. The efforts described in response to this selection criterion must be beyond those required by federal law or regulation such as the portability provisions of the Section 8 rental voucher and certificate programs. PHAs in metropolitan and non-metropolitan areas are eligible for points under this criterion. The local HUD Field Office will assign points to PHAs that have established cooperative agreements with other PHAs or created a consortium of PHAs in order to facilitate the transfer of families and their rental assistance between PHA jurisdictions. In addition, the local HUD Field Office will assign points to PHAs that have established relationships with nonprofit groups to provide families with additional counseling, or have directly provided counseling, to increase the likelihood of a successful move by the families to areas that do not have large concentrations of poverty.

(b) *Rating and Assessment:* The local HUD Field Office will assign 10 points for any of the following assessments for which the PHA qualifies and add the points for all the assessments (maximum of 60 points) to determine the total points for this Selection Criterion:

(i) 10 points—Assign 10 points if the PHA documents that it participates in an area-wide rental voucher and certificate exchange program where all PHAs absorb portable Section 8 families.

(ii) 10 Points—Assign 10 points if the PHA documents that its administrative plan does not include a ''residency preference'' for selection of families to participate in its rental voucher and certificate programs or the PHA states that it will eliminate immediately any ''residency preference'' currently in its administrative plan.

(iii) 10 Points—Assign 10 points if the PHA documents that PHA staff will provide housing counseling for families that want to move to low-poverty or non-minority areas, or if the PHA has established a contractual relationship with a nonprofit agency or a local governmental entity to provide housing counseling for families that want to move to low-poverty or non-minority areas. The five PHAs approved for the FY 1993 Moving to Opportunity (MTO) for Fair Housing Demonstration and any other PHAs that receive counseling funds from HUD (e.g., in settlement of litigation involving desegregation or demolition of public housing, regional opportunity counseling, or mixed population projects) may qualify for points under this assessment, but these PHAs must identify all activities undertaken, other than those funded by HUD, to expand housing opportunities.

(iv) 10 Points—Assign 10 points if the PHA documents that it requested from HUD, and HUD approved, the authority to utilize exceptions to the fair market rent limitations as allowed under 24 CFR 882.106(a)(4) to allow families to select units in low-poverty or non-minority areas.

(v) 10 Points—Assign 10 points if the PHA documents that it participates with other PHAs in using a metropolitan wide or combined waiting list for selecting participants in the program.

(vi) 10 Points—Assign 10 points if the PHA documents that it has implemented other initiatives that have resulted in expanding housing opportunities in areas that do not have undue concentrations of poverty or minority families.

(3) Threshold Criterion 3: Coordination Between PHA and Public Child Welfare Agency to Identify and Assist Eligible Families

The application must describe the method that the PHA and the PCWA will use to identify and assist Family Unification eligible families. The application must include a letter of intent from the PCWA stating its commitment to provide resources and support for the program. The PCWA letter of intent and other information must include an explanation of: the method for identifying Family Unification eligible families, the PCWA's certification process for determining Family Unification eligible

families, the responsibilities of each agency, the assistance that the PCWA will provide to families in locating housing units, the PCWA staff resources committed to the program, the past PCWA experience administering a similar program, and the PCWA/PHA cooperation in administering a similar program.

(4) Threshold Criterion 4: Public Child Welfare Agency Statement of Need for Family Unification Program

The application must include a statement by the PCWA describing the need for a program providing assistance to families for whom lack of adequate housing is a primary factor in the placement of the family's children in out-of-home care or in the delay of discharge of the children to the family from out-of-home care in the area to be served, as evidenced by the caseload of the public child welfare agency. The PCWA must adequately demonstrate that there is a need in the PHA's jurisdiction for the Family Unification program that is not being met through existing programs. The narrative must include specific information relevant to the area to be served, about homelessness, family violence resulting in involuntary displacement, number and characteristics of families who are experiencing the placement of children in out-of-home care or the delayed discharge of children from out-of-home care as the result of inadequate housing, and the PCWA's past experience in obtaining housing through HUD assisted programs and other sources for families lacking adequate housing.

(C) Funding FY 1999 Applications

After the local HUD Field Office has screened PHA applications and disapproved any applications unacceptable for further processing (See Section V(B) of this NOFA, below), the local HUD Field Office will review and rate all approvable applications, utilizing the Threshold Criteria and the point assignments listed in this NOFA. The local HUD Field Office will send to the Grants Management Center, Attention: Michael Diggs, Director, 501 School Street, SW, Suite 800, Washington, DC 20024, the following information on each application that passes the Threshold Criteria:

(1) Name and address of the PHA;

(2) Name and address of the Public Child Welfare Agency;

(3) Local HUD Field Office contact person and telephone number;

(4) The requested number of rental vouchers in the PHA application and the minimum number of rental vouchers acceptable to the PHA; and

(5) A completed fund reservation worksheet for the number of rental vouchers requested in the application and recommended for approval by the local HUD Field Office during the course of its review, and the corresponding one-year budget authority.

The Grants Management Center will select eligible PHAs to be funded based on a lottery in the event approvable applications submitted in FY 1999 are received for more funding than the approximately $28.2 million for such applications available under this NOFA. All FY 1999 PHA applications identified by the local HUD Field Offices as meeting the Threshold Criteria identified in this NOFA will be eligible for the lottery selection process. If the cost of funding these applications exceeds available funds, HUD will limit the number of FY 1999 applications selected for any State to no more than 10 percent of the budget authority made available under this NOFA in order to achieve geographic diversity. If establishing this geographic limit results in unspent budget authority, however, HUD may modify this limit to assure that all available funds are used.

Applications will be funded in full for the number of rental vouchers requested by the PHA in accordance with the NOFA. If the remaining rental voucher funds are insufficient to fund the last PHA application in full, however, the Grants Management Center may fund that application to the extent of the funding available and the applicant's willingness to accept a reduced number of rental vouchers. Applicants that do not wish to have the size of their programs reduced may indicate in their applications that they do not wish to be considered for a reduced award of funds. The Grants Management Center will skip over these applicants if assigning the remaining funding would result in a reduced funding level.

IV. Application Submission Requirements

(A) Form HUD–52515

Funding Application, form HUD–52515, must be completed and submitted for the Section 8 rental voucher program. This form includes all the necessary certifications for Fair Housing, Drug-Free Workplace and Lobbying Activities. An application must include the information in Section C, Average Monthly Adjusted Income, of form HUD–52515 in order for HUD to calculate the amount of Section 8 budget authority necessary to fund the requested number of voucher units. PHAs may obtain a copy of form HUD–52515 from the local HUD Field Office or may download it from the HUD Home page on the internet's world wide web (http://www.HUD.gov).

(B) Letter of Intent and Narrative

All the items in this section must be included with the application submitted to the local HUD Field Office. Funding is limited, and HUD may only have enough funds to approve a smaller amount than the number of rental vouchers requested. The PHA must state in its cover letter to the application whether it will accept a smaller number of rental vouchers and the minimum number of rental vouchers it will accept. The cover letter must also include a statement by the PHA certifying that the PHA has consulted with the agency or agencies in the State responsible for the administration of welfare reform to provide for the successful implementation of the State's welfare reform for families receiving rental assistance under the family unification program. The application must include an explanation of how the application meets, or will meet, Threshold Criteria 1 through 4 in Section III(B) of this NOFA, below.

The application must also include a letter of intent from the PCWA stating its commitment to provide resources and support for the Family Unification Program. The PCWA letter of intent must explain:

(1) The definition of eligible family unification program families;

(2) The method used to identify eligible Family Unification Program families;

(3) The process to certify eligible Family Unification Program families;

(4) The PCWA assistance to families to locate suitable housing;

(5) The PCWA staff resources committed to the program; and (6) PCWA experience with the administration of similar programs including cooperation with a PHA.

The PCWA serving the jurisdiction of the PHA is responsible for providing the information for Threshold Criterion 4, PCWA Statement of Need for Family Unification Program, to the PHA for submission with the PHA application. This should include a discussion of the case-load of the PCWA and information about homelessness, family violence resulting in involuntary displacement, number and characteristics of families who are experiencing the placement of children in out-of-home care as a result of inadequate housing, and the PCWA's experience in obtaining housing through HUD assisted housing programs and other sources for families lacking adequate housing. A State-wide Public

Child Welfare Agency must provide information on Threshold Criterion 4, PCWA Statement of Need for Family Unification Program, to all PHAs that request such information; otherwise, HUD will not consider applications from any PHAs with the State-wide PCWA as a participant in its program.

(C) Evaluation Certifications

The PHA and the PCWA, in separate certifications, must state that the PHA and Public Child Welfare Agency agree to cooperate with HUD and provide requested data to the HUD office or HUD-approved contractor delegated the responsibility for the program evaluation. No specific language for this certification is prescribed by HUD.

Note: *Notice of Repeal of Local Government Comment Requirements.*

Local government requirements that HUD was previously required to obtain from the unit of general local government on PHA applications for Section 8 rental assistance under Section 213(c) of the Housing and Community Development Act of 1974 are no longer required. Section 551 of the Quality Housing and Work Responsibility Act of 1998 (Pub.L. 105–276, 112 Stat. 2461, approved October 21, 1998) (QHWRA) repealed the provisions of Section 213(c) of the Housing and Community Development Act of 1974. Although section 503 of QHWRA establishes an effective date of October 1, 1999, for its provisions unless otherwise specifically provided, section 503 also permits any QHWRA provision or amendment to be implemented by notice, unless otherwise specifically provided. Accordingly, HUD's Notice of Initial Guidance on the QHWRA, published on February 18, 1999 (64 FR 8192), provided the notice of immediate implementation of section 551 of QHWRA, as permitted by section 503 of QHWRA.

V. Corrections To Deficient Family Unification Applications

(A) Acceptable Applications

To be eligible for processing, an application must be received by the local HUD Field Office no later than the date and time specified in this NOFA. The local HUD Field Office will initially screen all applications and notify PHAs of technical deficiencies by letter.

If an application has technical deficiencies, the PHA will have 14 calendar days from the date of the issuance of the HUD notification letter to submit and the local HUD Field Office receive the missing or corrected information. Curable technical deficiencies relate only to items that do not improve the substantive quality of the application relative to the rating factors.

Information received by the local HUD Field Office after 3 p.m. eastern standard time on the 14th calendar day of the correction period will not be accepted and the application will be rejected as incomplete.

(B) Unacceptable Applications

(1) After the 14-calendar day technical deficiency correction period, the local HUD Field Office will disapprove PHA applications that it determines are not acceptable for processing. The local HUD Field Office's notification of rejection letter must state the basis for the decision.

(2) Applications from PHAs that fall into any of the following categories will not be processed:

(a) Applications from PHAs that do not meet the requirements of Section II(A)(1) of this NOFA, Compliance With Fair Housing and Civil Rights Laws.

(b) The PHA has serious unaddressed, outstanding Inspector General audit findings, HUD management review findings, or independent public accountant (IPA) findings for its rental voucher or rental certificate programs, or the PHA has failed to achieve a lease-up rate of 90 percent of units in its HUD-approved budget for the PHA fiscal year prior to application for funding in each of its rental voucher and certificate programs (excluding the impact of the three-month statutory delay requirement effective in FY 1997 and 1998 for the reissuance of rental vouchers and certificates). The only exception to this category is if the PHA has been identified under the policy established in Section I(D)(2) of this NOFA and the PHA makes application with another agency or contractor that will administer the family unification assistance on behalf of the PHA.

(c) The PHA has failed to achieve a lease-up rate of at least 90 percent of the FUP units for which it received rental certificate funding in FY 1997 and prior years.

(d) The PHA is involved in litigation and HUD determines that the litigation may seriously impede the ability of the PHA to administer an additional increment of rental vouchers .

(e) After the 14-calendar day technical deficiency correction period, a PHA application that does not comply with the requirements of 24 CFR 982.102 and this NOFA, will be rejected from processing.

(f) A PHA application submitted after the deadline date.

VI. Findings and Certifications

Paperwork Reduction Act Statement

The Section 8 information collection requirements contained in this NOFA have been approved by the Office of Management and Budget in accordance with the Paperwork Reduction Act of 1995 (44 U.S.C. 3501–3520), and assigned OMB control number 2577–0169. An agency may not conduct or sponsor, and a person is not required to respond to, a collection of information unless the collection displays a valid control number.

Environmental Requirements and Impact

In accordance with 24 CFR 50.19(b)(1), activities assisted under this program are categorically excluded from the requirements of the National Environmental Policy Act of 1969 (42 U.S.C. 4321) (''NEPA'') and are not subject to environmental review under the related laws and authorities. This NOFA provides funding under 24 CFR 887 and 982, which do not contain environmental review provisions because they concern activities that are listed in 24 CFR 50.19(b) as categorically excluded from environmental review under NEPA. Accordingly, under 24 CFR 50.19(c)(5)(ii), this NOFA is categorically excluded from environmental review under NEPA.

Catalog of Federal Domestic Assistance Numbers

The Federal Domestic Assistance number for this program is: 14.857.

Federalism Impact

The General Counsel, as the Designated Official under section 6(a) of Executive Order 12612, *Federalism*, has determined that the policies contained in this notice will not have substantial direct effects on States or their political subdivisions, or the relationship between the Federal Government and the States, or on the distribution of power and responsibilities among the various levels of government. As a result, the notice is not subject to review under the Order. This notice is a funding notice and does not substantially alter the established roles of HUD, the States, and local governments, including PHAs.

Accountability in the Provision of HUD Assistance

Section 102 of the Department of Housing and Urban Development Reform Act of 1989 (HUD Reform Act) and the regulations codified in 24 CFR part 4, subpart A contain a number of

provisions that are designed to ensure greater accountability and integrity in the provision of certain types of assistance administered by HUD. On January 14, 1992 (57 FR 1942), HUD published a notice that also provides information on the implementation of section 102. The documentation, public access, and disclosure requirements of section 102 are applicable to assistance awarded under this NOFA as follows:

(1) *Documentation and public access requirements.* HUD will ensure that documentation and other information regarding each application submitted pursuant to this NOFA are sufficient to indicate the basis upon which assistance was provided or denied. This material, including any letters of support, will be made available for public inspection for a 5-year period beginning not less than 30 days after the award of the assistance. Material will be made available in accordance with the Freedom of Information Act (5 U.S.C. 552) and HUD's implementing regulations in 24 CFR part 15. In addition, HUD will include the recipients of assistance pursuant to this NOFA in its **Federal Register** notice of all recipients of HUD assistance awarded on a competitive basis.

(2) *Disclosures.* HUD will make available to the public for 5 years all applicant disclosure reports (HUD Form 2880) submitted in connection with this NOFA. Update reports (also Form 2880) will be made available along with the applicant disclosure reports, but in no case for a period less than 3 years. All reports—both applicant disclosures and updates—will be made available in accordance with the Freedom of Information Act (5 U.S.C. 552) and HUD's implementing regulations in 24 CFR part 15.

Section 103 of the HUD Reform Act

HUD will comply with its regulations implementing section 103 of the HUD Reform Act, codified in 24 CFR part 4, for this funding competition. These requirements continue to apply until the announcement of the selection of successful applicants.

HUD employees involved in the review of applications and in the making of funding decisions are restrained by part 4 from providing advance information to any person (other than persons authorized to receive such information) concerning funding decisions, or from otherwise giving any applicant an unfair competitive advantage. Persons who apply for assistance in this competition should confine their inquiries to the subject areas permitted under 24 CFR part 4.

Applicants or employees who have ethics related questions should contact the HUD Office of Ethics (202) 708–3815 (voice), (202) 708–1112 (TTY). (These are not toll-free numbers.) For HUD employees who have specific program questions, the employee should contact the appropriate Field Office Counsel.

Prohibition Against Lobbying Activities

Applicants for funding under this NOFA are subject to the provisions of section 319 of the Department of Interior and Related Agencies Appropriation Act for Fiscal Year 1991 (31 U.S.C. 1352) (the Byrd Amendment) and to the provisions of the Lobbying Disclosure Act of 1995 (Pub. L. 104–65; approved December 19, 1995).

The Byrd Amendment, which is implemented in regulations in 24 CFR part 87, prohibits applicants for Federal contracts and grants from using appropriated funds to attempt to influence Federal executive or legislative officers or employees in connection with obtaining such assistance, or with its extension, continuation, renewal, amendment, or modification. The Byrd Amendment applies to the funds that are the subject of this NOFA. Therefore, applicants must file a certification stating that they have not made and will not make any prohibited payments and, if any payments or agreement to make payments of nonappropriated funds for these purposes have been made, a form SF–LLL disclosing such payments must be submitted. The certification and the SF–LLL are included in the application package.

The Lobbying Disclosure Act of 1995 (Pub. L. 104–65; approved December 19, 1995), requires all persons and entities who lobby covered executive or legislative branch officials to register with the Secretary of the Senate and the Clerk of the House of Representatives and file reports concerning their lobbying activities.

Dated: March 2, 1999.

Harold Lucas,

Assistant Secretary for Public and Indian Housing.

[FR Doc. 99–5535 Filed 3–4–99; 8:45 am]

BILLING CODE 4210–33–P

federal register

Friday
March 5, 1999

Part VIII

Department of Housing and Urban Development

Service Coordinators in Multifamily Housing Funding Availability for Fiscal Year 1999; Notice

DEPARTMENT OF HOUSING AND URBAN DEVELOPMENT

[Docket No. FR–4421–N–01]

Fiscal Year 1999 Notice of Funding Availability for Service Coordinators in Multifamily Housing

AGENCY: Office of the Assistant Secretary for Housing-Federal Housing Commissioner, HUD.

ACTION: Notice of funding availability (NOFA).

SUMMARY: This NOFA announces the FY 1999 funding available for the Service Coordinator Program in multifamily housing.

Purpose of the Program. The purpose of this Service Coordinator program is to allow multifamily housing owners to assist elderly residents and residents with disabilities to obtain needed supportive services from the community, in order to enable them to continue living as independently as possible in their apartments.

Available Funds. Up to $5 million.

Eligible Applicants. Only owners of eligible developments may apply for and become the recipient of grant funds. Property management companies may administer grant programs but are not eligible applicants. See Section III for more detailed eligibility criteria.

Application Deadline. July 15, 1999.

Match. None.

Additional Inforamtion

I. Application Due Date, Application Kits, and Technical Assistance

Application Due Date. The application due date is July 15, 1999.

Number of copies. Submit three completed applications (an original and two copies). See the following paragraphs for specific procedures governing the form of application submissions (e.g., mailed applications, express mail, overnight delivery, or hand carried).

Addresses for Submitting Applications. Submit your application (original and two copies) to the HUD Field Office with jurisdiction over your development. The Appendix contains a list of the HUD Field Offices with addresses and phone numbers. Address your application to the Multifamily HUB or Multifamily Program Center Director in the appropriate Field Office. You should not submit any copies of your applications to HUD Headquarters.

Application Submission Procedures. Mailed Applications. Applications will be considered timely filed if postmarked on or before 12:00 midnight on the application due date and received by the designated HUD Office on or within *ten (10) days* of the application due date.

Applications Sent by Overnight/ Express Mail Delivery. Applications sent by overnight delivery or express mail will be considered timely filed if received before or on the application due date, or upon submission of documentary evidence that they were placed in transit with the overnight delivery service by no later than the specified application due date.

Hand Carried Applications. Hand carried applications to HUD Field offices will be accepted during normal business hours before the application due date. On the application due date, business hours will be extended to 6:00 PM local time.

For Application Kits, Further Information, and Technical Assistance.

For Application Kits. You may obtain an application kit and supplemental information by calling either the Multifamily Housing Clearinghouse at (voice) 1–800-MULTI–70 (1–800–685–8470) or (TTY) 1–800–483–2209 or HUD's Direct Distribution Center at 1–800–767–7468. When requesting the application kit, please refer to the Service Coordinator Program. Please make sure to provide your name, address (including zip code), and telephone number (including area code). The application kit will also be available on the Internet through the HUD web site at http://www.hud.gov.

For Further Information and Technical Assistance. The Multifamily Housing Resident Initiatives Specialist or Service Coordinator contact person in your local HUD Field Office can answer most of the questions you have regarding this NOFA and your application kit. Please refer to Field Office telephone numbers in the Appendix. If you are an owner of a Section 515 development, contact the Multifamily HUB or Multifamily Program Center in the HUD Field Office that normally provides asset management to that development. If you have a general question that the Field staff are unable to answer, please call Carissa Janis, Housing Project Manager, Office of Portfolio Management, Department of Housing and Urban Development, 451 Seventh Street, SW, Room 6174, Washington, DC 20410; (202) 708–3499, extension 2484. (This number is not toll free). If you are hearing or speech impaired, you may access this number via TTY by calling the Federal Information Relay Service at 1–800–877–8339.

II. Amount Allocated

This NOFA makes available up to $5,000,000 in FY 1999 funding from the $55,000,000 earmark in the Community Development Block Grants Fund account and is from the amount appropriated for public and assisted housing self-sufficiency programs, Departments of Veterans Affairs and Housing and Urban Development, and Independent Agencies Appropriations Act, 1999 (Pub. L. 105–276, 112 Stat. 2461, approved October 21, 1998).

Alternative Funding for Service Coordinators. When this funding is exhausted, owners may request processing under Housing's Management Agent Handbook 4381.5, REVISION–2, CHANGE–2, Chapter 8. This Handbook provides procedures for requesting funding for a coordinator using residual receipts, the budget-based rent increase process, contract rents adjusted by the Annual Adjustment Factor (AAF) or the Project Rental Assistance Contract (PRAC). Section 8 approvals must be consistent with current policy.

III. Program Description; Eligible and Ineligible Applicants, Developments, and Activities

(A) Program Description. The Service Coordinator Program provides funding for the employment and support of service coordinators in insured and assisted housing developments that are designed for the elderly and persons with disabilities and continue to operate as such. Service coordinators help residents obtain supportive services from the community that are needed to enable independent living and aging in place.

A service coordinator is a social service staff person hired or contracted by the development's owner or management company. The coordinator is responsible for assuring that elderly residents, especially those who are frail or at risk, and those non-elderly residents with disabilities are linked to the specific supportive services they need to continue living independently in that development. The service coordinator, however, may not require any elderly individual or person with a disability to accept the supportive services.

You may want to review the Management Agent Handbook 4381.5 REVISION–2, CHANGE–2, Chapter 8 for further guidance on service coordinators.

This Handbook and past Service Coordinator program Notices are accessible through HUDCLIPS on HUD's web site. The URL for the HUDCLIPS

Database Selection Screen is http://www.hudclips.org/subscriber/cgi/legis.cgi. These notices are in the Handbooks and Notices—Housing Notices database. Enter only the number without the letter prefix (e.g., 94–99) in the ''Document Number'' to retrieve the program notice.

Changes to This Year's Program.

—There is *no minimum unit number* for eligible developments. In proposing a Service Coordinator program at a small development, however, you must be careful to conform to the hiring guidelines provided in the application kit.

—Funding is allowed to augment current Service Coordinator programs and to continue programs in cases where current or previous funding sources are no longer available. Please refer to Section III.D and III.F, below.

(B) Eligible Applicants

(1) Only owners of eligible developments listed in paragraph D.1 below may apply for funding through this NOFA.

(2) To be eligible, owners must meet the criteria listed below for all HUD insured and assisted developments they own:

(a) Have no outstanding contract violations of a contractual or regulatory nature.

(b) You, the applicant must comply with all fair housing and civil rights laws, statutes, regulations, and executive orders as enumerated in 24 CFR 5.105(a). If you, the applicant (a) have been charged with a systemic violation of the Fair Housing Act by the Secretary alleging ongoing discrimination; (b) are the defendant in a Fair Housing Act lawsuit filed by the Department of Justice alleging an ongoing pattern or practice of discrimination; or (c) have received a letter of noncompliance findings under Title VI of the Civil Rights Act of 1964, section 504 of the Rehabilitation Act of 1973, or section 109 of the Housing and Community Development Act of 1974, your application will not be evaluated under this NOFA if, prior to the application deadline, the charge, lawsuit, or letter of findings has not been resolved to the satisfaction of the Department. HUD's decision regarding whether a charge, lawsuit, or a letter of findings has been satisfactorily resolved will be based upon whether appropriate actions have been taken necessary to address allegations of ongoing discrimination in the policies or practices involved in the charge, lawsuit, or letter of findings.

(3) If your eligibility status changes during the course of the grant term, making you ineligible to receive a grant (e.g. due to prepayment of mortgage, sale of property, or opting out of a Section 8 Housing Assistance Payment (HAP) contract), HUD has the right to terminate your grant.

(C) Ineligible Applicants

Property management companies, area agencies on aging, and other like organizations are not eligible applicants for Service Coordinator funds. Such agents may prepare applications and sign application documents if they provide written authorization from the owner corporation as part of the application. In such cases, the owner corporation must be indicated on all forms and documents as the funding recipient.

(D) Eligible Developments

(1) Are Section 202 and 202/8, existing Section 8 project-based and moderate rehabilitation developments (including Rural Housing Service (RHS) Section 515/8), and Section 221(d)(3) below-market interest rate and 236 developments that are insured or assisted.

(2) Have frail or at-risk elderly residents and/or non-elderly residents with disabilities who together total at least 25 percent of the building's residents.

(3) Are designed for the elderly or persons with disabilities and are continuing to operate as such. This includes any building within a mixed-use development that was designed for occupancy by elderly persons or persons with disabilities at its inception and continues to operate as such, or consistent with title VI, subtitle D of the Housing and Community Development Act of 1992. If not so designed, a development in which the owner gives preferences in tenant selection (with HUD approval) to eligible elderly persons or persons with disabilities, for all units in that development.

(4) Are finally closed.

(5) Are current in mortgage payments or are current under a workout agreement.

(6) Meet HUD's Uniform Physical Conditions Standards (as published in the September 1, 1998 **Federal Register**), based on the most recent physical inspection report and responses thereto.

(7) Are in compliance with their regulatory agreement, HAP Contract, and other outstanding directives.

(8) Section 202 developments must have a residual receipts account separate from the Repair and Replacement account, or agree to establish this account. This requirement does not apply to Sections 8, 221(d)(3) below-market interest rate, or 236 developments.

(9) Owners using the AAF rent increase process or who are profit-motivated must provide certification that rental and other income from the development are insufficient to pay for a service coordinator.

(E) Ineligible Developments

(1) Developments not designed for the elderly or disabled or those no longer operating as such.

(2) Section 221(d)(4) developments.

(3) Section 202/811 developments with a PRAC. Owners of Section 202 PRAC developments may obtain funding by requesting an increase in their PRAC payment consistent with Handbook 4381.5 REVISION–2, CHANGE–2, Chapter 8. There is no statutory authority for service coordinators in Section 811 developments.

(F) Eligible Activities

(1) Service Coordinator Program grant funds may be used to pay for the salary, fringe benefits, and related administrative costs for employing a service coordinator. Administrative costs may include, but are not limited to, purchase of furniture, office equipment and supplies, training, quality assurance, travel, and utilities.

(2) You may use funds to augment a current Service Coordinator program, by increasing the hours of a currently employed Service Coordinator, or hiring an additional Service Coordinator or aide on a part-or full-time basis.

(3) You may use funds to continue a Service Coordinator program that has previously been funded through other sources. In your application, you must provide evidence that this funding source has already ended or will discontinue within six months following the application deadline date and that no other funding mechanism is available to continue the program. This applies only to funding sources other than the subsidy awards provided by the Department through program Notices beginning in FY 1992. HUD intends to provide one-year extensions to these subsidy awards through a separate funding action.

(4) You may propose reasonable costs associated with setting up a confidential office space for the Service Coordinator. Such expenses must be one-time only administrative start-up costs. Such costs may involve acquisition, leasing, rehabilitation, or conversion of space. HUD Field Office staff must approve both the proposed costs and activity and must perform an environmental

assessment on such proposed work prior to grant award.

(G) Ineligible Activities

(1) You may not use funds available through this NOFA to replace currently available funding from other sources for a service coordinator or for some other staff person who performs service coordinator functions.

(2) Owners with existing service coordinator subsidy awards may not apply for renewal or extension of those programs under this NOFA.

(3) Congregate Housing Services Program (CHSP) grantees may not use these funds to meet statutory program match requirements and may not use these funds to replace current CHSP program funds to continue the employment of a service coordinator.

(4) The cost of application preparation is not eligible.

(5) Grant funds cannot be used to increase a project's management fee.

IV. Program Requirements

These requirements apply to all activities funded under this program.

(A) Administrative Costs

Normal annual administrative expenses must not exceed 10 percent of your program's total annual cost, with the exception of first year costs, which may reasonably exceed 10 percent due to start-up expenses. HUD has the right to reduce the proposed costs if they appear unreasonable or inappropriate.

(B) Term of Funded Activities

The grant term is three years. Grants will be renewable subject to the availability of funds.

(C) Subgrants and Subcontracting

You may directly hire a Service Coordinator or you may contract with a qualified third party to provide this service.

(D) Environmental Requirements

It is anticipated that activities under this program are categorically excluded under 24 CFR 50.19(b)(3), (4), (12), or (13). If grant funds will be used to cover the cost of any non-exempt activities, HUD will perform an environmental review to the extent required by 24 CFR part 50, prior to grant award.

(E) Required Certifications, Assurances, and Other Forms

All applications for funding under the Service Coordinator Program must contain the following documents and information:

(1)(a) FY 1998 applicants' letter to use FY 1998 applications (no other documentation required) or

(b) Transmittal letter and request, using the designated format.

(2) (If applicable) Lead agency letter format.

(3) Evidence of comparable salaries in local area.

(4) If quality assurance is included in the proposed budget, a justification and explanation of how this work will be performed.

(5) A bank statement showing the current residual receipts or surplus cash balance in the development's account.

(6) (If applicable) Evidence that prior funding sources for your development's Service Coordinator program are no longer available.

(7) Service Coordinator Certifications. This includes certifications that you, the applicant, will comply with the requirements of the Fair Housing Act, Title VI of the Civil Rights Act of 1964, Section 504 of the Rehabilitation Act of 1973, and the Age Discrimination Act of 1975, and that you will affirmatively further fair housing.

(8)(a) Certification from an Independent Public Accountant or the cognizant government auditor stating that the financial management system employed by the applicant meets proscribed standards for fund control and accountability required by the pertinent Office of Management and Budget (OMB) Circular.

(b) Owners applying on behalf of developments using the AAF must also provide certification from the auditor that the development's rental or other income is insufficient to pay the costs of employing a Service Coordinator.

(9) Service Coordinator Applicant Data Input Sheet.

(10) Applicant checklist.

(11) Each applicant must also submit signed copies of the following forms, assurances and certifications:

(a) Standard form (SF) 424, Application for Federal Assistance;

(b) Standard Form (SF) 424–B, Assurances for Non-construction Programs;

(c) Drug-Free Workplace Certification (HUD–50070);

(d) Certification and Disclosure Form Regarding Lobbying Activities (SF–LLL); and

(e) Applicant/Recipient Disclosure Update Report (HUD–2880).

V. Application Selection Process

(A) General

Service Coordinator Program grant funds will not be awarded through a rating and ranking process. Instead, HUD will hold one national lottery for all approvable applications forwarded from Multifamily HUB or Multifamily Program Centers (a list of these offices is found in the Appendix to this notice).

(B) Threshold Eligibility Review

(1) HUD Multifamily Field Office staff will review applications for completeness and compliance with the eligibility criteria set forth in Section III of this NOFA. Field Office staff will forward application information to Headquarters for entry into the lottery if the application was received by the deadline date, meets all eligibility criteria, proposes reasonable costs for eligible activities, and includes all technical corrections by the designated deadline date.

(2) ''Reasonable costs'' are further discussed in the application kit, but are generally those that are consistent with salaries and administrative costs of similar programs in the jurisdiction of the HUD Field Office.

(C) The Lottery

HUD staff will use a computer program to randomly select applications. HUD will fully fund as many applications as possible with the given amount of funds. If funds remain after fully funding as many applications as possible, HUD will offer to partially fund the next application chosen in the lottery, in order to use the entire allocation of funds.

VI. Application Submission Requirements

(A) FY 1998 Applicants

If your FY 1998 application was approved by the Field Office but not selected in the FY 1998 lottery and you wish to apply again this year, you may use the same application to apply for FY 1999 funds. You need not submit a new application, if no components of your proposed FY 1998 program will change. You must submit a letter to your local Field Office, *by the application deadline date*, stating that you would like the Field Office to approve your application for FY 1999 funding, that no part of your proposed program will change, and that the development and owner entity continue to meet all eligibility requirements. If this letter is not received by the deadline date, your FY 1998 application will not be considered for funding. The Field staff has the right to reject your FY 1998 application for FY 1999 funding, if recent circumstances cause the application to become ineligible. If you wish to change any component of your proposed FY 1998 program, you must submit a new application.

(B) Full Application Submission Requirements

(1) *Single Applications.*

(a) You may submit one application for one or more developments that your corporation owns.

(b) You may submit more than one application to a single Field Office, if you wish to increase your chances of selection in the lottery. Each application must propose a stand-alone program and the development(s) must all be located in the same Field Office jurisdiction.

(c) If you wish to apply on behalf of developments located in different Field Office jurisdictions, you must submit a separate application to each Field Office.

(2) *Joint Applications.* You may join with one or more other eligible owners to share a Service Coordinator and submit a joint application. In the past, joint applications have been used by small developments who joined together to hire and share a part or full-time Service Coordinator.

(3) *There is no maximum grant amount.* The grant amount you request must be consistent with the staffing guidelines provided in the application kit and your proposed salary must be supported by evidence of comparable salaries in your area.

VII. Corrections to Deficient Applications

After the application due date, HUD may not consider unsolicited information from an applicant. HUD may contact an applicant, however, to clarify an item in the application or to correct technical deficiencies. Applicants should note, however, that HUD may not seek clarification of items or responses that improve the substantive quality of the applicant's response to any eligibility or selection criterion. *Examples* of curable technical deficiencies include failure to submit proper certifications or failure to submit the application containing an original signature by an authorized official. In each case HUD will notify the applicants by facsimile or by return receipt requested. Applicants must submit clarifications or corrections of technical deficiencies in accordance with the information provided by HUD within 14 calendar days of the date of receipt of the HUD notification. If the deficiency is not corrected within this time period, HUD will reject the application as incomplete.

VIII. Findings and Certifications

(A) Paperwork Reduction Act

The information collection requirements contained in this notice were submitted to the Office of Management and Budget for review under the provisions of the Paperwork Reduction Act of 1995 (44 U.S.C. 3501–3520) and have been assigned OMB control number 2577–0198. An agency may not conduct or sponsor, and a person is not required to respond to, a collection of information unless the collection displays a valid control number.

(B) Catalog of Federal Domestic Assistance Numbers

The catalog of Federal Domestic Assistance number for this program is 14.191, Multifamily Service Coordinator Program.

(C) Executive Order 12612, Federalism

The General Counsel, as the Designated Official under section 6(a) of Executive Order 12612, Federalism, has determined that the provisions of this NOFA do not have ''federalism implications'' within the meaning of the Order. This notice merely invites applications from assisted housing developments for service coordinator grants. As a result, the notice is not subject to review under the Order.

(D) Prohibition Against Lobbying Activities

Applicants for funding under this NOFA are subject to the provisions of section 319 of the Department of Interior and Related Agencies Appropriation Act for Fiscal Year 1991 (31 U.S.C. 1352) (the Byrd Amendment) and to the provisions of the Lobbying Disclosure Act of 1995 (Pub. L. 104–65; approved December 19, 1995).

The Byrd Amendment, which is implemented in regulations at 24 CFR part 87, prohibits applicants for Federal contracts and grants from using appropriated funds to attempt to influence Federal executive or legislative officers or employees in connection with obtaining such assistance, or with its extension, continuation, renewal, amendment, or modification. The Byrd Amendment applies to the funds that are the subject of this NOFA. Therefore, applicants must file a certification stating that they have not made and will not make any prohibited payments and, if any payments or agreement to make payments of nonappropriated funds for these purposes have been made, a form SF-LLL disclosing such payments must be submitted. The certification and the SF-LLL are included in the application.

The Lobbying Disclosure Act of 1995 (Pub. L. 104–65; approved December 19, 1995), which repealed section 112 of the HUD Reform Act, requires all persons and entities who lobby covered executive or legislative branch officials to register with the Secretary of the Senate and the Clerk of the House of Representatives and file reports concerning their lobbying activities.

(E) Section 102 of the HUD Reform Act; Documentation and Public Access Requirements

Section 102 of the Department of Housing and Urban Development Reform Act of 1989 (HUD Reform Act) and the final rule codified at 24 CFR part 4, subpart A, published on April 1, 1996 (61 FR 1448), contain a number of provisions that are designed to ensure greater accountability and integrity in the provision of certain types of assistance administered by HUD. On January 14, 1992, HUD published, at 57 FR 1942, a notice that also provides information on the implementation of section 102. The documentation, public access, and disclosure requirements of section 102 are applicable to assistance awarded under this NOFA as follows:

(1) *Documentation and public access requirements.* HUD will ensure that documentation and other information regarding each application submitted pursuant to this NOFA are sufficient to indicate the basis upon which assistance was provided or denied. This material, including any letters of support, will be made available for public inspection for a five-year period beginning not less than 30 days after the award of the assistance. Material will be made available in accordance with the Freedom of Information Act (5 U.S.C. 552) and HUD's implementing regulations at 24 CFR part 15. In addition, HUD will include the recipients of assistance pursuant to this NOFA in its **Federal Register** notice of all recipients of HUD assistance awarded on a competitive basis.

(2) *Disclosures.* HUD will make available to the public for five years all applicant disclosure reports (HUD Form 2880) submitted in connection with this NOFA. Update reports (also Form 2880) will be made available along with the applicant disclosure reports, but in no case for a period less than three years. All reports—both applicant disclosures and updates—will be made available in accordance with the Freedom of Information Act (5 U.S.C. 552) and HUD's implementing regulations at 24 CFR part 15.

(F) Section 103 of the HUD Reform Act

HUD's regulations implementing section 103 of the Department of Housing and Urban Development Reform Act of 1989 (42 U.S.C. 3537a), codified in 24 CFR part 4, apply to this funding competition. The regulations continue to apply until the announcement of the selection of successful applicants. HUD employees involved in the review of applications and in the making of funding decisions are limited by regulations from providing advance information to any person (other than an authorized employee of HUD) concerning funding decisions, or from otherwise giving any applicant an unfair competitive advantage. Persons who apply for assistance in this competition should confine their inquiries to the subject areas permitted under 24 CFR part 4.

Applicants or employees who have ethics-related questions, such as whether particular subject matter can be discussed with persons outside the Department, should contact HUD's Ethics Law Division (202) 708–3815 (voice), (202) 708–1112 (TTY). (These are not toll-free numbers.) For HUD employees who have specific program questions, the employee should contact the appropriate Field Office Counsel or Headquarters Counsel for the program to which the question pertains.

(G) Environmental Impact

A Finding of No Significant Impact with respect to the environment for this rule has been made in accordance with HUD regulations at 24 CFR part 50, which implement section 102(2)(C) of the National Environmental Policy Act of 1969. The Finding of No Significant Impact is available for public inspection between 7:30 a.m. and 5:30 p.m. weekdays in the Office of the Rules Docket Clerk, Office of the General Counsel, Department of Housing and Urban Development, Room 10276, 451 Seventh Street, S.W., Washington, D.C. 20410.

IX. Authority

Section 808 of the Cranston-Gonzalez National Affordable Housing Act (Pub. L. 101–625, approved November 28, 1990), as amended by sections 671, 674, 676, and 677 of the Housing and Community Development Act of 1992 (Pub. L. 102–550, approved October 28, 1992), provides authority for service coordinators in multifamily assisted housing developments.

Dated: March 2, 1999.

William C. Apgar,

Assistant Secretary for Housing-Federal Housing Commissioner.

Appendix—HUD Field Office List for Multifamily Housing

ALABAMA

Multifamily Housing Program Center
HUD—Birmingham Office
600 Beacon Parkway West, Rm. 300
Birmingham, AL 35209–3144
OFC PHONE (205) 290–7667
FAX (205) 290–7632

ALASKA

Multifamily Housing Hub
HUD Seattle Office
909 First Avenue, Suite 190, MS–0AHM
Seattle, WA 98104–1000
OFC PHONE (206) 220–5145
FAX (206) 220–5108

ARIZONA

Multifamily Housing Program Center
HUD Phoenix Office
400 North Fifth Street, Suite 1600
Phoenix, AZ 85004–2361
OFC PHONE (602) 379–4434
FAX (602) 379–3985

ARKANSAS

Multifamily Housing Program Center
HUD Little Rock Office
425 West Capitol Avenue #900
Little Rock, AR 72201–3488
OFC PHONE (501) 324–5401
FAX (501) 324–6142

CALIFORNIA

Multifamily Housing Hub
HUD—San Francisco Office
450 Golden Gate Avenue
PO Box 36003
San Francisco, CA 94102–3448
OFC PHONE (415) 436–6505
FAX (415) 436–8996

Multifamily Housing Program Center
HUD Los Angeles Office
611 W. Sixth Street, Suite 1100
Los Angeles, CA 90017
OFC PHONE (213) 894–8000 Ext. 3634
FAX (213) 894–8107

COLORADO

Multifamily Housing Hub
HUD Denver Office
633 17th Street, 14th Floor
Denver, CO 80202–3607
OFC PHONE (303) 672–5343
FAX (303) 672–5153

CONNECTICUT

Multifamily Housing Program Center
HUD—Hartford Office
One Corporate Center, 19th floor
Hartford, CT 06103–3220
OFC PHONE (860) 240–4800 Ext. 00
FAX (860) 240–4850

DELAWARE

Multifamily Housing Hub
HUD Philadelphia Office
The Wanamaker Building
100 Penn Square, East
Philadelphia, PA 19107–3380
OFC PHONE (215) 656–0609 Ext. 3533
FAX (215) 656–3427

DISTRICT OF COLUMBIA

Multifamily Housing Program Center
HUD Washington, DC Office, Suite 300
820 First Street, N.E.
Washington, DC 20002–4205
OFC PHONE (202) 275–9200
FAX (202) 275–9212

FLORIDA

Multifamily Housing Hub
HUD—Jacksonville Office
301 West Bay Street, Suite 2200
Jacksonville, FL 32202–5121
OFC PHONE (904) 232–1777 x2144
FAX (904) 232–2731

GEORGIA

Multifamily Housing Hub
HUD—Atlanta Office
75 Spring Street, SW
Atlanta, GA 30303–3388
OFC PHONE (404) 331–4976
FAX (404) 331–4028

HAWAII

Multifamily Housing Program Center
HUD Honolulu Office
7 Waterfront Plaza
500 Ala Moana Blvd. #500
Honolulu, HI 96813–4918
OFC PHONE (808) 522–8185 Ext. 241
FAX (808) 522–8194

IDAHO

Multifamily Housing Hub
HUD Seattle Office
909 First Avenue, Suite 190, MS–0AHM
Seattle, WA 98104–1000
OFC PHONE (206) 220–5145
FAX (206) 220–5108

ILLINOIS

Multifamily Housing Hub
HUD—Chicago Office
Ralph Metcalfe Federal Building
77 West Jackson Boulevard
Chicago, IL 60604–3507
OFC PHONE (312) 353–6236 Ext. 2202
FAX (312) 886–2729

INDIANA

Multifamily Housing Program Center
HUD Indianapolis Office
151 North Delaware Street, Suite 1200
Indianapolis, IN 46204–2526
OFC PHONE (317) 226–6303
FAX (317) 226–7308

IOWA

Multifamily Housing Program Center
HUD Des Moines Office
210 Walnut Street, Room 239
Des Moines, IA 50309–2155
OFC PHONE (515) 284–4736
FAX (515) 284–4743

KANSAS

Multifamily Housing Hub
HUD Kansas City Office
400 State Avenue, Room 200
Kansas City, KS 66101–2406
OFC PHONE (913) 551–6844
FAX (913) 551–5469

KENTUCKY

Multifamily Housing Program Center
HUD—Louisville Office
601 West Broadway, PO Box 1044
Louisville, KY 40201–1044
OFC PHONE (502) 582–6124
FAX (502) 582–6547

LOUISIANA

Multifamily Housing Program Center
HUD New Orleans Office
Hale Boggs Bldg.—501 Magazine Street, 9th Floor
New Orleans, LA 70130–3099
OFC PHONE (504) 589–7236
FAX (504) 589–6834

MAINE

Multifamily Housing Program Center
HUD—Manchester Office
Norris Cotton Federal Bldg.
275 Chestnut Street
Manchester, NH 03101–2487
OFC PHONE (603) 666–7684
FAX (603) 666–7697

MARYLAND

Multifamily Housing Hub
HUD Baltimore Office, 5th Floor
10 South Howard Street
Baltimore, MD 21201–2505
OFC PHONE (410) 962–2520 Ext. 3474
FAX (410) 962–1849

MASSACHUSETTS

Multifamily Housing Hub
HUD—Boston Office
O'Neil Federal Building
10 Causeway Street, Rm. 375
Boston, MA 02222–1092
OFC PHONE (617) 565–5162
FAX (617) 565–6557

MICHIGAN

Multifamily Housing Hub
HUD Detroit Office
477 Michigan Avenue
Detroit, MI 48226–2592
OFC PHONE (313) 226–7900
FAX (313) 226–5611

Multifamily Housing Program Center
HUD Grand Rapids
Trade Center Building
50 Louis Street, N.W.
Grand Rapids, MI 49503–2648
OFC PHONE (616) 456–2100
FAX (616) 456–2191

MINNESOTA

Multifamily Housing Hub
HUD Minneapolis Office
220 Second Street, South
Minneapolis, MN 55401–2195
OFC PHONE (612) 370–3051 Ext. 0
FAX (612) 370–3090

MISSISSIPPI

Multifamily Housing Program Center
HUD Jackson Office—McCoy Federal Building
100 W. Capitol Street, Room 910
Jackson, MS 39269–1096
OFC PHONE (601) 965–4738
FAX (601) 965–4773

MISSOURI

Multifamily Housing Hub
HUD Kansas City Office
400 State Avenue, Room 200
Kansas City, KS 66101–2406
OFC PHONE (913) 551–6844
FAX (913) 551–5469

Multifamily Housing Program Center
HUD St. Louis Office
1222 Spruce Street #3207
St. Louis, MO 63103–2836
OFC PHONE (314) 539–6560
FAX (314) 539–6384

MONTANA

Multifamily Housing Hub
HUD Denver Office
633 17th Street, 14th Floor
Denver, CO 80202–3607
OFC PHONE (303) 672–5343
FAX (303) 672–5153

NEBRASKA

Multifamily Housing Program Center
HUD Omaha Office
10909 Mill Valley Road, Suite 100
Omaha, NB 68154–3955
OFC PHONE (402) 492–3113
FAX (402) 492–3184

NEVADA

Multifamily Housing Program Center
HUD Las Vegas Office
333 N. Rancho Drive—Atrium Bldg. Suite 700
Las Vegas, NV 89106–3714
OFC PHONE (702) 388–6525
FAX (702) 388–6244

NEW HAMPSHIRE

Multifamily Housing Program Center
HUD—Manchester Office
Norris Cotton Federal Bldg.
275 Chestnut Street
Manchester, NH 03101–2487
OFC PHONE (603) 666–7684
FAX (603) 666–7697

NEW JERSEY

Multifamily Housing Program Center
HUD—Newark Office—13th Floor
One Newark Center
Newark, NJ 07102–5260
OFC PHONE (973) 622–7900 Ext. 3524
FAX (973) 645–2323

NEW MEXICO

Multifamily Housing Hub
HUD Ft. Worth Office
1600 Throckmorton, PO Box 2905
Ft. Worth, TX 76113–2905
OFC PHONE (817) 978–9031 Ext. 3201
FAX (817) 978–9011

NEW YORK

Multifamily Housing Hub
HUD—New York Office
26 Federal Plaza—Suite 3541
New York, NY 10278–0068
OFC PHONE (212) 264–0777 Ext. 3900
FAX (212) 264–3068

Multifamily Housing Hub
HUD—Buffalo Office
Lafayette Court, 5th Floor
465 Main Street
Buffalo, NY 14203–1780
OFC PHONE (716) 551–5755 Ext. 5501
FAX (716) 551–3252

NORTH CAROLINA

Multifamily Housing Hub
HUD Greensboro Office—Koger Building
2306 West Meadowview Road
Greensboro, NC 27407
OFC PHONE (336) 547–4020
FAX (336) 547–4121

NORTH DAKOTA

Multifamily Housing Hub
HUD Denver Office
633 17th Street, 14th Floor
Denver, CO 80202–3607
OFC PHONE (303) 672–5343
FAX (303) 672–5153

OHIO

Multifamily Housing Hub
HUD Columbus Office
200 North High Street
Columbus, OH 43215–2499
OFC PHONE (614) 469–5737, Ext. 8111
FAX (614) 469–2432

Multifamily Housing Program Center
HUD Cincinnati Office
525 Vine Street, Suite 700
Cincinnati, OH 45202–3188
OFC PHONE (513) 684–2350
FAX (513) 684–6224

Multifamily Housing Program Center
HUD Cleveland Office
1350 Euclid Avenue, Suite 500
Cleveland, OH 44115–1815
OFC PHONE (216) 522–4058 Ext. 7000
FAX (216) 522–4067

OKLAHOMA

Multifamily Housing Program Center
HUD Oklahoma City Office
500 W. Main Street, Suite 400
Oklahoma City, OK 73102–2233
OFC PHONE (405) 553–7410
FAX (405) 553–7406

OREGON

Multifamily Housing Hub
HUD Seattle Office
909 First Avenue, Suite 190, MS–0AHM
Seattle, WA 98104–1000
OFC PHONE (206) 220–5145
FAX (206) 220–5108

PENNSYLVANIA

Multifamily Housing Hub
HUD Philadelphia Office
The Wanamaker Building
100 Penn Square, East
Philadelphia, PA 19107–3380
OFC PHONE (215) 656–0609 Ext. 3533
FAX (215) 656–3427

Multifamily Housing Hub
HUD Pittsburgh Office
339 Sixth Avenue—Sixth Floor
Pittsburgh, PA 15222–2515
OFC PHONE (412) 644–6639
FAX (412) 644–4240

PUERTO RICO

Multifamily Housing Program Center
HUD Caribbean Office
171 Carlos E. Chardon Avenue
San Juan, PR 00918–0903
OFC PHONE (787) 766–5400 Ext. 2046
FAX (787) 766–5522

RHODE ISLAND

Multifamily Housing Program Center

HUD—Providence Office
10 Weybosset Street
Sixth Floor
Providence, RI 02903–2808
OFC PHONE (401) 528–5230
FAX (401) 528–5097

SOUTH CAROLINA

Multifamily Housing Program Center
HUD Columbia Office
1835 Assembly Street
Columbia, SC 29201–2480
OFC PHONE (803) 765–5162
FAX (803) 253–3043

SOUTH DAKOTA

Multifamily Housing Hub
HUD Denver Office
633 17th Street, 14th Floor
Denver, CO 80202–3607
OFC PHONE (303) 672–5343
FAX (303) 672–5153

TENNESSEE

Multifamily Housing Program Center
HUD—Knoxville Office
710 Locust Street, SW
Knoxville, TN 37902–2526
OFC PHONE (423) 545–4411
FAX (423) 545–4578
Multifamily Housing Program Center
HUD—Nashville Office
251 Cumberland Bend Drive
Suite 200
Nashville, TN 37228–1803
OFC PHONE (615) 736–5748
FAX (615) 736–2018

TEXAS

Multifamily Housing Hub
HUD Ft. Worth Office
1600 Throckmorton, PO Box 2905
Ft. Worth, TX 76113–2905
OFC PHONE (817) 978–9031 Ext. 3201
FAX (817) 978–9011

Multifamily Housing Program Center
HUD Houston Office
2211 Norfolk, #200
Houston, TX 77098–4096
OFC PHONE (713) 313–2274 Ext. 7015
FAX (713) 313–2319

Multifamily Housing Program Center
HUD San Antonio Office
800 Dolorosa
San Antonio, TX 78207–4563
OFC PHONE (210) 475–6831
FAX (210) 472–6897

UTAH

Multifamily Housing Hub
HUD Denver Office
633 17th Street, 14th Floor
Denver, CO 80202–3607
OFC PHONE (303) 672–5343
FAX (303) 672–5153

VERMONT

Multifamily Housing Program Center
HUD—Manchester Office
Norris Cotton Federal Bldg.
275 Chestnut Street
Manchester, NH 03101–2487
OFC PHONE (603) 666–7684
FAX (603) 666–7697

VIRGINIA

Multifamily Housing Hub
HUD Richmond Office
3600 West Broad Street
Richmond, VA 23230–4920
OFC PHONE (804) 278–4500 Ext. 3146
FAX (804) 278–4603

WASHINGTON

Multifamily Housing Hub
HUD Seattle Office
909 First Avenue, Suite 190, MS–0AHM
Seattle, WA 98104–1000
OFC PHONE (206) 220–5145
FAX (206) 220–5108

WEST VIRGINIA

Multifamily Housing Program Center
HUD—Charleston Office
405 Capitol Street, Suite 708
Charleston, WV 25301–1795
OFC PHONE (304) 347–7000 Ext. 103
FAX (304) 347–7050

WISCONSIN

Multifamily Housing Program Center
HUD Milwaukee Office
310 West Wisconsin Avenue
Room 1380
Milwaukee, WI 53203–2289
OFC PHONE (414) 297–3214 Ext. 8662
FAX (414) 297–3204

WYOMING

Multifamily Housing Hub
HUD Denver Office
633 17th Street, 14th Floor
Denver, CO 80202–3607
OFC PHONE (303) 672–5343
FAX (303) 672–5153

[FR Doc. 99–5536 Filed 3–4–99; 8:45 am]

BILLING CODE 4210–27–P

Reader Aids

Federal Register

Vol. 64, No. 43

Friday, March 5, 1999

CUSTOMER SERVICE AND INFORMATION

Federal Register/Code of Federal Regulations

General Information, indexes and other finding aids	**202–523–5227**
Laws	**523–5227**
Presidential Documents	
Executive orders and proclamations	**523–5227**
The United States Government Manual	**523–5227**
Other Services	
Electronic and on-line services (voice)	**523–4534**
Privacy Act Compilation	**523–3187**
Public Laws Update Service (numbers, dates, etc.)	**523–6641**
TTY for the deaf-and-hard-of-hearing	**523–5229**

ELECTRONIC RESEARCH

World Wide Web

Full text of the daily Federal Register, CFR and other publications:

http://www.access.gpo.gov/nara

Federal Register information and research tools, including Public Inspection List, indexes, and links to GPO Access:

http://www.nara.gov/fedreg

E-mail

PENS (Public Law Electronic Notification Service) is an E-mail service that delivers information about recently enacted Public Laws. To subscribe, send E-mail to

listproc@lucky.fed.gov

with the text message:

subscribe publaws-l <firstname> <lastname>

Use listproc@lucky.fed.gov only to subscribe or unsubscribe to PENS. We cannot respond to specific inquiries at that address.

Reference questions. Send questions and comments about the Federal Register system to:

info@fedreg.nara.gov

The Federal Register staff cannot interpret specific documents or regulations.

FEDERAL REGISTER PAGES AND DATES, MARCH

9905–10100 1
10101–10204 2
10205–10386 3
10387–10554 4
10555–10918 5

CFR PARTS AFFECTED DURING MARCH

At the end of each month, the Office of the Federal Register publishes separately a List of CFR Sections Affected (LSA), which lists parts and sections affected by documents published since the revision date of each title.

3 CFR

Proclamations:
7168 10101
7169 10379
7170 10383
7171 10385

Executive Orders:
12852 (Amended by EO 13114) 10099
13114 10099

5 CFR

532 ..... 9905, 9905

7 CFR

Proposed Rules:
1823 10235
1956 10235

9 CFR

Proposed Rules:
1 10400
3 10400
113 10400
391 10402

10 CFR

Proposed Rules:
63 10405

11 CFR

Proposed Rules:
2 10405
4 10405
5 10405

12 CFR

3 10194
208 10194
225 10201
325 10194
567 10194

14 CFR

25 10740
39 ..... 9906, 9908, 9910, 9911, 9912, 10205, 10208, 10209, 10211, 10213, 10216, 10555, 10557, 10560
71 ..... 10387, 10562, 10563, 10740
97 ..... 9912, 9914

Proposed Rules:
39 ..... 9939, 10237, 10578
71 ..... 9940, 10238, 10239, 10241, 10242, 10243, 10410, 10411

15 CFR

774 10852
806 10387

16 CFR

Proposed Rules:
1213 10245
1500 10245
1513 10245

17 CFR

240 10564

Proposed Rules:
210 10579
228 10579
240 ..... 9948, 10579

20 CFR

404 10103

21 CFR

520 ..... 10103, 10389
556 10103

24 CFR

3500 10080

26 CFR

1 10218
602 10218

Proposed Rules:
1 10262

28 CFR

Proposed Rules:
25 10262
549 10095

33 CFR

62 10104
117 10104

34 CFR

694 10184

39 CFR

20 ..... 9915, 10219

40 CFR

52 9916
58 10389
60 10105
271 10111
80 10366
82 10374
136 10391
439 10391
180 ..... 10227, 10233, 10567

Proposed Rules:
Ch. 1 10066
52 ..... 9951, 9952, 10118, 10265, 10342
60 10119
94 10596

97 10118
136 10596
271 10121
372 ....9957, 10597
435 10266

42 CFR

Proposed Rules:
447 10412
457 10412

43 CFR

Proposed Rules:
3800 9960

44 CFR

64 9919

Proposed Rules:
77 10181
80 10181
81 10181
82 10181
83 10181
152 10181
220 10181
221 10181
222 10181
207 10181
301 10181
303 10181
306 10181
308 10181
320 10181
324 10181
325 10181
328 10181
333 10181
336 10181

45 CFR

60 9921

Proposed Rules:
92 10412
95 10412
1224 10872
2508 10872

46 CFR

502 9922
545 9922
565 10395
571 9922

47 CFR

73 9923
90 10395

Proposed Rules:
1 9960
2 10266
95 10266

48 CFR

Ch. 1 ....10530, 10552
1 ....10531, 10548
4 10531
5 10535
8 10535
11 10538
12 ....10531, 10535
13 10538
14 10531
15 10544
16 10538
19 10535
22 10545
25 10548
26 10531
27 10531
31 10547
32 ....10531, 10548
41 10531
52 ....10531, 10535, 10538, 10545, 10548
53 10548
1806 10571
1815 10573
1819 10571
1842 10573
1852 ....10571, 10573

49 CFR

171 ....9923, 10742
172 10742
173 10742
174 10742
175 10742
176 10742
177 10742
178 10742
180 10742
571 10786
596 10786
1000—1199 10234

Proposed Rules:
571 ....9961, 10604

50 CFR

216 9925
285 10576
600 9932
660 9932
679 ....9937, 10397, 10398

Proposed Rules:
216 9965
285 10438
600 10438
622 ....10612, 10613
630 10438
635 10438
644 10438
660 10439
678 10438

REMINDERS

The items in this list were editorially compiled as an aid to Federal Register users. Inclusion or exclusion from this list has no legal significance.

RULES GOING INTO EFFECT MARCH 5, 1999

COMMERCE DEPARTMENT

Export Administration Bureau

Export licensing:
- Commerce control list—
  - Wassenaar Arrangement List of Dual-Use Items; implementation; commerce control list revisions and reporting requirements; published 3-5-99

COMMODITY FUTURES TRADING COMMISSION

Commodity Exchange Act:
- Self-regulatory organization governing boards and committees; prohibition of voting by interested members; published 1-4-99
- Correction; published 1-21-99

ENVIRONMENTAL PROTECTION AGENCY

Pesticides; tolerances in food, animal feeds, and raw agricultural commodities:
- Oxirane, etc.; published 3-5-99

NATIONAL AERONAUTICS AND SPACE ADMINISTRATION

Acquisition regulations:
- Canadian Commercial Corp. and small business innovation research Phase II contracts; submission of cost or pricing data for acquisitions; waiver; published 3-5-99
- Earned value management system; application; published 3-5-99
- Mentor-protege program; published 3-5-99

SECURITIES AND EXCHANGE COMMISSION

Securities:
- Belgium; securities exemption for purposes of trading futures contracts; published 3-5-99

TRANSPORTATION DEPARTMENT

Federal Aviation Administration

Airworthiness directives:
- Raytheon; published 1-26-99

TRANSPORTATION DEPARTMENT

Surface Transportation Board

Fees:
- Licensing and related services; 1999 update; published 2-3-99

COMMENTS DUE NEXT WEEK

AGRICULTURE DEPARTMENT

Agricultural Marketing Service

Almonds grown in California; comments due by 3-8-99; published 1-5-99

AGRICULTURE DEPARTMENT

Animal and Plant Health Inspection Service

Plant-related quarantine, domestic:
- Pine shoot beetle; comments due by 3-8-99; published 1-5-99

AGRICULTURE DEPARTMENT

Farm Service Agency

Program regulations:
- Disaster-set-aside program; comments due by 3-8-99; published 1-5-99

Special programs:
- Small hog operation payment program; comments due by 3-12-99; published 2-10-99

AGRICULTURE DEPARTMENT

Rural Utilities Service

Telecommunications standards and specifications:
- Materials, equipment, and construction—
  - Borrower contractual obligations; standard contract forms requirements; comments due by 3-12-99; published 2-10-99
  - Borrower contractual obligations; standard contract forms requirements; comments due by 3-12-99; published 2-10-99

COMMERCE DEPARTMENT

National Oceanic and Atmospheric Administration

Fishery conservation and management:
- Alaska; fisheries of Exclusive Economic Zone—
  - Western Alaska community development quota program; comments due by 3-10-99; published 2-8-99
- Atlantic highly migratory species—
  - Regulations consolidation; comments due by 3-12-99; published 3-4-99

COMMODITY FUTURES TRADING COMMISSION

Foreign futures and options transactions:
- Representations and disclosures required by IBs, CPOs and CTAs; comments due by 3-12-99; published 1-11-99

ENERGY DEPARTMENT

Chronic beryllium disease prevention program; comments due by 3-9-99; published 12-3-98

ENVIRONMENTAL PROTECTION AGENCY

Air programs; approval and promulgation; State plans for designated facilities and pollutants:
- New York; comments due by 3-11-99; published 2-9-99

Air quality implementation plans; approval and promulgation; various States:
- Arizona; comments due by 3-8-99; published 1-21-99
- California; comments due by 3-11-99; published 2-9-99
- Colorado; comments due by 3-11-99; published 2-9-99
- Minnesota; comments due by 3-10-99; published 2-8-99

Pesticides; tolerances in food, animal feeds, and raw agricultural commodities:
- Diphenylamine; comments due by 3-8-99; published 2-19-99
- Picloram; comments due by 3-8-99; published 1-5-99
- Tebuconazole; comments due by 3-9-99; published 1-8-99

Superfund program:
- Toxic chemical release reporting; community right-to-know—
  - Persistent Bioaccumulative Toxic (PBT) chemicals; threshold reporting, etc.; comments due by 3-8-99; published 1-5-99
  - Persistent bioaccumulative toxic (PBT) chemicals; reporting thresholds lowered, etc.; comments due by 3-8-99; published 2-23-99

FEDERAL COMMUNICATIONS COMMISSION

Radio stations; table of assignments:
- Kansas; comments due by 3-8-99; published 1-26-99
- Mississippi; comments due by 3-8-99; published 1-26-99

FEDERAL DEPOSIT INSURANCE CORPORATION

Minimum security devices and procedures and Bank Secrecy Act:
- Insured nonmember banks; Know Your Customer programs development; comments due by 3-8-99; published 12-7-98

FEDERAL RESERVE SYSTEM

Membership of State banking institutions; international banking operations; bank holding companies and change in bank control (Regulations H, K, and Y):
- Domestic and foreign banking organizations; Know Your Customer programs development; comments due by 3-8-99; published 12-7-98

FEDERAL TRADE COMMISSION

Trade regulation rules:
- Pay-per-call rule; comments due by 3-10-99; published 1-4-99

HEALTH AND HUMAN SERVICES DEPARTMENT

Food and Drug Administration

Food for human consumption:
- Food labeling—
  - Uniform compliance date; comments due by 3-8-99; published 12-23-98

HEALTH AND HUMAN SERVICES DEPARTMENT

Health Care Financing Administration

Medicare:
- Ambulatory surgical centers; ratesetting methodology, payment rates and policies, and covered surgical procedures list,; comments due by 3-9-99; published 1-12-99
- Hospital outpatient services; prospective payment system; comments due by 3-9-99; published 1-12-99

HEALTH AND HUMAN SERVICES DEPARTMENT

Acquisition regulations:
- Streamlining and simplification; comments due by 3-9-99; published 1-8-99

HEALTH AND HUMAN SERVICES DEPARTMENT

Inspector General Office, Health and Human Services Department

Medicare:

Hospital outpatient services; prospective payment system; comments due by 3-9-99; published 1-12-99

HEALTH AND HUMAN SERVICES DEPARTMENT

Refugee Resettlement Office

Refugee resettlement program:

Public/private partnership program; refugee cash and medical assistance; requirements; comments due by 3-9-99; published 1-8-99

INTERIOR DEPARTMENT

Surface Mining Reclamation and Enforcement Office

Permanent program and abandoned mine land reclamation plan submissions:

Ohio; comments due by 3-10-99; published 2-8-99

JUSTICE DEPARTMENT

Federal Prison Industries

FPI's abilitiy to accomplish it mission; standards and procedures; comments due by 3-8-99; published 1-7-99

NATIONAL CREDIT UNION ADMINISTRATION

Federal Credit Union Act:

Supervisory committee audits and verifications; comments due by 3-8-99; published 1-6-99

SECURITIES AND EXCHANGE COMMISSION

Investment advisers:

Ohio investment advisers; transition rule; comments due by 3-8-99; published 2-5-99

SMALL BUSINESS ADMINISTRATION

Small business investment companies:

Low and moderate income investments (LMI investments); category establishment; comments due by 3-11-99; published 2-9-99

STATE DEPARTMENT

Consular services; fee schedule:

Changes; comments due by 3-12-99; published 2-10-99

Nationality and passports:

Passports denial, revocation, or cancellation and consular reports of birth cancellation; procedures; comments due by 3-8-99; published 2-5-99

TRANSPORTATION DEPARTMENT

Coast Guard

Drawbridge operations:

New York et al.; comments due by 3-9-99; published 1-8-99

TRANSPORTATION DEPARTMENT

Computer reservation systems, carrier-owned; comments due by 3-12-99; published 2-26-99

TRANSPORTATION DEPARTMENT

Federal Aviation Administration

Airworthiness directives:

Avions Pierre Robin; comments due by 3-11-99; published 2-8-99

Boeing; comments due by 3-8-99; published 1-21-99

General Electric Co.; comments due by 3-8-99; published 1-6-99

Pratt & Whitney; comments due by 3-11-99; published 1-11-99

Raytheon Aircraft Co.; comments due by 3-8-99; published 1-5-99

Saab; comments due by 3-12-99; published 2-10-99

Airworthiness standards:

Turbine engines; bird ingestion; comments due by 3-11-99; published 12-11-98

Class D airspace; comments due by 3-10-99; published 2-8-99

Class E airspace; comments due by 3-8-99; published 1-21-99

Class E airspace; correction; comments due by 3-10-99; published 2-8-99

Federal airways; comments due by 3-11-99; published 1-25-99

High offshore airspace areas; comments due by 3-11-99; published 1-25-99

TRANSPORTATION DEPARTMENT

Federal Highway Administration

Payment procedures:

Surface transportation projects; credit assistance; comments due by 3-10-99; published 2-8-99

TRANSPORTATION DEPARTMENT

Federal Railroad Administration

Payment procedures:

Surface transportation projects; credit assistance; comments due by 3-10-99; published 2-8-99

TRANSPORTATION DEPARTMENT

Federal Transit Administration

Payment procedures:

Surface transportation projects; credit assistance; comments due by 3-10-99; published 2-8-99

TRANSPORTATION DEPARTMENT

National Highway Traffic Safety Administration

Motor vehicle safety standards:

Lamps, reflective devices, and associated equipment—

Signal lamps and reflectors; geometric visibility requirements; worldwide harmonization; comments due by 3-10-99; published 12-10-98

TREASURY DEPARTMENT

Alcohol, Tobacco and Firearms Bureau

Alcoholic beverages:

Wine; labeling and advertising—

Johannisberg Riesling; wine designation; comments due by 3-8-99; published 1-6-99

TREASURY DEPARTMENT

Comptroller of the Currency

Minimum security devices and procedures, reports of suspicious activities, and Bank Secrecy Act compliance program:

National banks; Know Your Customer programs development; comments due by 3-8-99; published 12-7-98

TREASURY DEPARTMENT

Internal Revenue Service

Income taxes:

Consolidated return regulations—

S corporation acquisition by consolidated group member; comments due by 3-10-99; published 12-17-98

Estates; applicability of seperate share rules; comments due by 3-8-99; published 1-6-99

Practice and procedure:

Organizational and individual performance; balanced measurement system; establishment; comments due by 3-8-99; published 1-5-99

TREASURY DEPARTMENT

Thrift Supervision Office

Operations:

Savings associations; Know Your Customer programs development; comments due by 3-8-99; published 12-7-98