4–1–99
Vol. 64 No. 62
Pages 15633–15914

federal register

Thursday
April 1, 1999

Briefings on how to use the Federal Register
For information on briefings in Washington, DC, see announcement on the inside cover of this issue.

The **FEDERAL REGISTER** is published daily, Monday through Friday, except official holidays, by the Office of the Federal Register, National Archives and Records Administration, Washington, DC 20408, under the Federal Register Act (44 U.S.C. Ch. 15) and the regulations of the Administrative Committee of the Federal Register (1 CFR Ch. I). The Superintendent of Documents, U.S. Government Printing Office, Washington, DC 20402 is the exclusive distributor of the official edition.

The **Federal Register** provides a uniform system for making available to the public regulations and legal notices issued by Federal agencies. These include Presidential proclamations and Executive Orders, Federal agency documents having general applicability and legal effect, documents required to be published by act of Congress, and other Federal agency documents of public interest.

Documents are on file for public inspection in the Office of the Federal Register the day before they are published, unless the issuing agency requests earlier filing. For a list of documents currently on file for public inspection, see http://www.nara.gov/fedreg.

The seal of the National Archives and Records Administration authenticates the Federal Register as the official serial publication established under the Federal Register Act. Under 44 U.S.C. 1507, the contents of the **Federal Register** shall be judicially noticed.

The **Federal Register** is published in paper and on 24x microfiche. It is also available online at no charge as one of the databases on GPO Access, a service of the U.S. Government Printing Office.

The online edition of the **Federal Register** is issued under the authority of the Administrative Committee of the Federal Register as the official legal equivalent of the paper and microfiche editions (44 U.S.C. 4101 and 1 CFR 5.10). It is updated by 6 a.m. each day the **Federal Register** is published and it includes both text and graphics from Volume 59, Number 1 (January 2, 1994) forward.

GPO Access users can choose to retrieve online **Federal Register** documents as TEXT (ASCII text, graphics omitted), PDF (Adobe Portable Document Format, including full text and all graphics), or SUMMARY (abbreviated text) files. Users should carefully check retrieved material to ensure that documents were properly downloaded.

On the World Wide Web, connect to the **Federal Register** at http://www.access.gpo.gov/nara. Those without World Wide Web access can also connect with a local WAIS client, by Telnet to swais.access.gpo.gov, or by dialing (202) 512-1661 with a computer and modem. When using Telnet or modem, type swais, then log in as guest with no password.

For more information about GPO Access, contact the GPO Access User Support Team by E-mail at gpoaccess@gpo.gov; by fax at (202) 512–1262; or call (202) 512–1530 or 1–888–293–6498 (toll free) between 7 a.m. and 5 p.m. Eastern time, Monday–Friday, except Federal holidays.

The annual subscription price for the **Federal Register** paper edition is $555, or $607 for a combined **Federal Register,** Federal Register Index and List of CFR Sections Affected (LSA) subscription; the microfiche edition of the **Federal Register** including the Federal Register Index and LSA is $220. Six month subscriptions are available for one-half the annual rate. The charge for individual copies in paper form is $8.00 for each issue, or $8.00 for each group of pages as actually bound; or $1.50 for each issue in microfiche form. All prices include regular domestic postage and handling. International customers please add 25% for foreign handling. Remit check or money order, made payable to the Superintendent of Documents, or charge to your GPO Deposit Account, VISA, MasterCard or Discover. Mail to: New Orders, Superintendent of Documents, P.O. Box 371954, Pittsburgh, PA 15250–7954.

There are no restrictions on the republication of material appearing in the **Federal Register.**

How To Cite This Publication: Use the volume number and the page number. Example: 64 FR 12345.

SUBSCRIPTIONS AND COPIES

PUBLIC	
Subscriptions:	
Paper or fiche	**202–512–1800**
Assistance with public subscriptions	**512–1806**
General online information	**202–512–1530; 1–888–293–6498**
Single copies/back copies:	
Paper or fiche	**512–1800**
Assistance with public single copies	**512–1803**
FEDERAL AGENCIES	
Subscriptions:	
Paper or fiche	**523–5243**
Assistance with Federal agency subscriptions	**523–5243**

FEDERAL REGISTER WORKSHOP

THE FEDERAL REGISTER: WHAT IT IS AND HOW TO USE IT

FOR: Any person who uses the Federal Register and Code of Federal Regulations.

WHO: Sponsored by the Office of the Federal Register.

WHAT: Free public briefings (approximately 3 hours) to present:

1. The regulatory process, with a focus on the Federal Register system and the public's role in the development regulations.
2. The relationship between the Federal Register and Code of Federal Regulations.
3. The important elements of typical Federal Register documents.
4. An introduction to the finding aids of the FR/CFR system.

WHY: To provide the public with access to information necessary to research Federal agency regulations which directly affect them. There will be no discussion of specific agency regulations.

WASHINGTON, DC

WHEN: April 20, 1999 at 9:00 am.

WHERE: Office of the Federal Register
Conference Room
800 North Capitol Street, NW.
Washington, DC
(3 blocks north of Union Station Metro)

RESERVATIONS: 202–523–4538

Printed on recycled paper.

Contents

Federal Register

Vol. 64, No. 62

Thursday, April 1, 1999

Agency for International Development
RULES
Organization, functions, and authority delegations:
Executive agency status, 15685
NOTICES
Organization, functions, and authority delegations:
Executive agency status, 15717

Agency for Toxic Substances and Disease Registry
NOTICES
Grants and cooperative agreements; availability, etc.:
Educational and community-based programs, 15768–15770
Human health studies applied research and development, 15770–15772
Meetings:
Inter-tribal Council on Hanford Health Projects, 15772
Public Health Service Citizens Advisory Committee, 15772–15773

Agricultural Marketing Service
RULES
Oranges, grapefruit, tangerines, and tangelos grown in—
Florida, 15634–15636

Agriculture Department
See Agricultural Marketing Service
See Commodity Credit Corporation
See Farm Service Agency
See Forest Service
See Grain Inspection, Packers and Stockyards Administration

Air Force Department
NOTICES
Patent licenses; non-exclusive, exclusive, or partially exclusive:
Laser Photonics Technology, Inc., 15732–15733

Antitrust Division
NOTICES
Competitive impact statements and proposed consent judgments:
Central Parking Corp. & Aliright Holdings, Inc., 15795–15803

Arms Control and Disarmament Agency
RULES
Repeal of CFR regulations, 15686

Centers for Disease Control and Prevention
NOTICES
Agency information collection activities:
Submission for OMB review; comment request, 15773–15774

Civil Rights Commission
NOTICES
Meetings; State advisory committees:
New York, 15725–15726
Pennsylvania, 15726
Virginia, 15726
Wyoming, 15726

Coast Guard
PROPOSED RULES
Boating safety:
Passenger Safety Act of 1998—
Uninspected passenger vessels safety, 15709–15711

Commerce Department
See Foreign-Trade Zones Board
See International Trade Administration
See National Oceanic and Atmospheric Administration

Commodity Credit Corporation
NOTICES
Agency information collection activities:
Proposed collection; comment request, 15717–15718

Corporation for National and Community Service
NOTICES
Agency information collection activities:
Proposed collection; comment request, 15731–15732

Customs Service
PROPOSED RULES
Foreign trade zones; weekly entry procedure; withdrawal
Correction, 15873
NOTICES
Tariff rate quotas:
Tuna fish, 15870–15871

Defense Department
See Air Force Department
See Navy Department
NOTICES
Meetings:
National Security Senior Advisory Board, 15732

Drug Enforcement Administration
NOTICES
Applications, hearings, determinations, etc.:
Ansys Diagnostics, Inc., 15803
Cadiz Thrift-T Drug, Inc., 15803–15805
Dietz, Nichael W., D.D.S., 15805–15806
Irix Pharmauticals, Inc., 15807
Johnson Matthey, Inc., 15807–15808
Knoll Pharmaceutical Co., 15808
Lilly Del Caribe, Inc., 15808
Mallinckrodt Chemical, Inc., 15808–15809
Noramco of Delaware, Inc., 15809
Nycomed, Inc., 15809
Prior, William Franklin, Jr. M.D., 15806–15807
PRODIM, 15809–15810
Roxane Laboratories, Inc., 15810–15811
Taro Pharmaceuticals U.S.A., Inc., 15811
Thomas, George, PA-C, 15811–15812

Education Department
NOTICES
Agency information collection activities:
Proposed collection; comment request, 15733–15734
Submission for OMB review; comment request, 15734
Grants and cooperative agreements; availability, etc.:
Safe Schools/Healthy Students Initiative, 15905–15909

Employment and Training Administration
NOTICES
Grants and cooperative agreements; availability, etc.:
Job Training Partnership Act—
Contextual learning demonstration program, 15819–15830

Energy Department
See Energy Information Administration
See Federal Energy Regulatory Commission
See Western Area Power Administration
NOTICES
Defense Nuclear Facilities Safety Board recommendations:
Intergrated safety management and DOE facilities, 15734–15735
Powerplant and industrial fuel use; new electric powerplant coal capability:
Self-certification filings—
Panda Guadalupe Power, L.P., et al., 15735

Energy Information Administration
NOTICES
Agency information collection activities:
Proposed collection; comment request, 15735–15736

Environmental Protection Agency
RULES
Air quality implementation plans; approval and promulgation; various States:
Missouri, 15688–15690
PROPOSED RULES
Air quality implementation plans; approval and promulgation; various States:
Missouri, 15711–15712
NOTICES
Superfund; response and remedial actions, proposed settlements, etc.:
Friedrichsohn's Cooperage, Inc. Site, 15746
Toxic and hazardous substances control:
Lead-based paint activities in target housing and child-occupied facilities; State and Indian Tribe authorization applications—
West Virginia, 15746–15749
Water pollution; discharge of pollutants (NPDES):
Saipan; reverse osmosis desalinization facilities; general permit, 15749–15753

Export-Import Bank
NOTICES
Meetings:
Sub-Saharan African Advisory Committee, 15753

Farm Service Agency
NOTICES
Agency information collection activities:
Proposed collection; comment request, 15717–15718

Federal Aviation Administration
RULES
Air traffic operating and flight rules, etc.:
Pilot responsibility for compliance with air traffic control clearances and instructions, 15911–15914
Airworthiness directives:
Bell Helicopter Textron, Inc., 15661–15669
Construcciones Aeronauticas, S.A., 15659–15660
McDonnell Douglas, 15657–15659
Sikorsky, 15669–15673
Class E airspace, 15673–15680
PROPOSED RULES
Class D airspace, 15708–15709
NOTICES
Meetings:
RTCA, Inc., 15868
Passenger facilities charges; applications, etc.:
Hagerstown Regional Airport, MD, 15868–15869
Applications, hearings, determinations, etc.:
RTCA, Inc., 15867–15868

Federal Communications Commission
PROPOSED RULES
Radio stations; table of assignments:
Iowa, 15714–15716, 15712
Nevada, 15713–15714
New York, 15714
South Dakota, 15713
Wyoming, 15713
NOTICES
Agency information collection activities:
Proposed collection; comment request, 15753–15754
Reporting and recordkeeping requirements, 15754–15755
Rulemaking proceedings; petitions filed, granted, denied, etc., 15755–15756
Applications, hearings, determinations, etc.:
Norcom Communications Corp., 15755

Federal Contract Compliance Programs Office
RULES
Affirmative action and nondiscrimination obligations of contractors:
Individuals with disabilities; special disabled veterans, 15690–15691

Federal Deposit Insurance Corporation
RULES
Deposit insurance coverage:
Joint accounts and payable-on-death accounts, 15653–15657
NOTICES
Agency information collection activities:
Proposed collection; comment request, 15756–15758

Federal Energy Regulatory Commission
NOTICES
Environmental statements; availability, etc.:
Alabama Power Co., 15740
Hydroelectric applications, 15740–15744
Applications, hearings, determinations, etc.:
AEE 2, L.L.C., 15736–15737
CNG Transmission Corp., 15737
Frontier Gas Storage Co., 15737
Midwestern Gas Transmission Co., 15737–15738
Natural Gas Pipeline Co. of America, 15738
Tennessee Gas Pipeline Co., 15738–15739
Texas Eastern Transmission Corp., 15739
TriState Pipeline, L.L.C., 15739–15740

Federal Maritime Commission
NOTICES
Agreements filed, etc., 15758

Financial Management Service
See Fiscal Service

Fiscal Service
NOTICES
Agency information collection activities:
Proposed collection; comment request, 15871

Fish and Wildlife Service
RULES
Endangered and threatened species:
Flatwoods salamander, 15691–15704
NOTICES
Endangered and threatened species permit applications, 15779–15780
Meetings:
Aquatic Nuisance Species Task Force, 15780–15781

Food and Drug Administration
RULES
Animal drugs, feeds, and related products:
New drug applications—
Dinoprost tromethamine sterile solution, 15685
Sponsor names and drug labeler codes, etc.; technical amendments, 15683–15684
Sulfadimethoxine tablets and boluses; technical amendment, 15684–15685
NOTICES
Food for human consumption:
Adulteration involving hard or sharp foreign objects; compliance policy guide; availability, 15774–15775

Foreign-Trade Zones Board
NOTICES
Applications, hearings, determinations, etc.:
Michigan
ESCO Co. L.P.; colorformer chemicals manufacturing facility, 15726–15727

Forest Service
NOTICES
Environmental statements; notice of intent:
Ouachita National Forest, OK, 15718–15723

Grain Inspection, Packers and Stockyards Administration
NOTICES
Agency designation actions:
Illinois, 15723
Nebraska, et al., 15724–15725

Health and Human Services Department
See Agency for Toxic Substances and Disease Registry
See Centers for Disease Control and Prevention
See Food and Drug Administration
See Health Care Financing Administration
See Health Resources and Services Administration
See National Institutes of Health
See Substance Abuse and Mental Health Services Administration
NOTICES
Grants and cooperative agreements; availability, etc.:
Temporary Assistance to Needy Families, 15758–15767
Health promotion and disease prevention objectives for Healthy People 2010 project; partnership initiative, 15767
Meetings:
Vital and Health Statistics National Committee, 15767–15768

Health Care Financing Administration
NOTICES
Agency information collection activities:
Proposed collection; comment request, 15775

Health Resources and Services Administration
NOTICES
Meetings:
Health Professions and Nurse Education Special Emphasis Panel, 15775
Infant Mortality Advisory Committee, 15775–15776

Housing and Urban Development Department
NOTICES
Environmental statements; availability, etc.:
Hartford, CT; section 108 loan gaurantee funded infrastructure project, 15777–15778
Grants and cooperative agreements; availability, etc.:
Public and Indian housing—
Proceeds of sales of former 1937 Act homeownership units; transition requirements revision, 15778–15779

Immigration and Naturalization Service
NOTICES
Agency information collection activities:
Submission for OMB review; comment request, 15812–15817
Temporary protected status program designations:
Nicaragua; correction, 15817

Interior Department
See Fish and Wildlife Service
See Land Management Bureau
See Minerals Management Service
See National Park Service

Internal Revenue Service
RULES
Employment taxes and collection of income taxes at source:
Federal Insurance Contributions Act (FICA); taxation of amounts under employee benefit plans
Correction, 15687–15688
Excise taxes:
Group health plans; continuation coverage requirements; correction, 15873
Income taxes:
Foreign partnerships and corporations; property transfers by U.S. persons; information reporting requirements
Correction, 15686–15687
Transfers of stock or securities by U.S. persons to foreign corporations and related reporting requirements; correction, 15687
Reporting and recordkeeping requirements
Correction, 15688
NOTICES
Meetings:
Information Reporting Program Advisory Committee, 15871–15872

International Trade Administration
NOTICES
Antidumping:
Tapered roller bearings and parts, four inches or less in outside diameter andcomponents from—
Japan, 15729–15730
Antidumping and countervailing duties:
Five-year (sunset) reviews—
Conduct policies, 15727–15728
Final results and revocations, 15728–15729
Cheese quota; foreign government subsidies:
Quarterly update, 15730–15731

Countervailing duties:
Tillage tools from—
Brazil; correction, 15731

International Trade Commission
NOTICES
Import investigations:
Bearings from—
China, et al., 15783–15786
Internal combustion forklift trucks from—
Japan, 15786–15788
Nitrile rubber from—
Japan, 15788–15790
Potassium chloride from—
Canada, 15790–15792

Judicial Conference of the United States
NOTICES
Judicial Conduct and Disability Act:
Petitions for review of circuit council orders, 15792–15794

Justice Department
See Antitrust Division
See Drug Enforcement Administration
See Immigration and Naturalization Service
See Juvenile Justice and Delinquency Prevention Office
NOTICES
Community Oriented Policing Services Office:
Safe Schools/Healthy Students Initiative, 15905–15909
Pollution control; consent judgments:
Butterfield Joint Venture, Ltd., 15794
Cantrel et al. and Ohio Power Co. et al., 15794–15795
Janssen Ortho LLC, 15795
Linda Carroll and Carroll Carolina Corp., 15795

Juvenile Justice and Delinquency Prevention Office
NOTICES
Grants and cooperative agreements; availability, etc.:
Safe Schools/Healthy Students Initiative, 15905–15909

Labor Department
See Employment and Training Administration
See Federal Contract Compliance Programs Office
NOTICES
Agency information collection activities:
Submission for OMB review; comment request, 15817–15819

Land Management Bureau
NOTICES
Realty actions; sales, leases, etc.:
Oregon, 15781
Recreation management rescrictions, etc.:
Vale District Baker Resource Area, OR; special permit, 15781
Withdrawal and reservation of lands:
Arizona, 15781
Wyoming; correction, 15873

Minerals Management Service
NOTICES
Agency information collection activities:
Reporting and recordkeeping requirements, 15781–15782

National Institutes of Health
NOTICES
Meetings:
National Institute of Mental Health, 15776
National Library of Medicine, 15776–15777

National Oceanic and Atmospheric Administration
RULES
Fishery conservation and management:
Northeastern United States fisheries—
Framework adjustment 28; harbor porpoise protection, 15704–15707

National Park Service
NOTICES
Native American human remains and associated funerary objects:
Pecos National Historical Park, NM; inventory
Correction, 15873

Navy Department
NOTICES
Patent licenses; non-exclusive, exclusive, or partially exclusive:
Madison Technology International, Ltd., 15733

Nuclear Regulatory Commission
RULES
Classified information, access and protection; conformance to national policies, 15636–15653
PROPOSED RULES
Fee schedules revision; 100% fee recovery (1999 FY), 15897–15903
NOTICES
Environmental statements; availability, etc.:
Kerr-McGee Corp., 15831–15834
Meetings:
Reactor Safeguards Advisory Committee, 15834–15835
Petitions; Director's decisions:
Vermont Yankee Nuclear Power Corp., 15835–15836
Regulatory agreements:
Agreement State programs; policy statements, 15837–15841
Applications, hearings, determinations, etc.:
First Energy Nuclear Operating Co., 15831

Personnel Management Office
RULES
Health benefits, Federal employees:
Contributions and withholdings; weighted average of subscription charges, 15633

Public Debt Bureau
See Fiscal Service

Public Health Service
See Agency for Toxic Substances and Disease Registry
See Centers for Disease Control and Prevention
See Food and Drug Administration
See Health Resources and Services Administration
See National Institutes of Health
See Substance Abuse and Mental Health Services Administration

Railroad Retirement Board
NOTICES
Agency information collection activities:
Proposed collection; comment request, 15841–15842

Research and Special Programs Administration
NOTICES
Meetings:
Pipeline Safety Advisory Committees, 15869

Securities and Exchange Commission
RULES
Investment advisers:
Ohio investment advisers; transition rule, 15680–15683
NOTICES
Investment Company Act of 1940:
Deregistration applications—
Kemper Gold Fund, et al., 15852–15854
Self-regulatory organizations; proposed rule changes:
MBS Clearing Corp., 15854–15855
Municipal Securities Rulemaking Board, 15855–15856
Pacific Stock Exchange, Inc., 15856–15857
Philadelphia Stock Exchange, Inc., 15857–15866
Applications, hearings, determinations, etc.:
Manufactures Investment Trust et al., 15842–15844
PFL Life Insurance Co. et al., 15844–15846
Sun Capital Advisers Trust et al., 15846–15852

Small Business Administration
PROPOSED RULES
Small business size standards:
Manufacturer and remanufacturer; definitions as they apply to computer industry, 15708

Substance Abuse and Mental Health Services Administration
NOTICES
Agency information collection activities:
Submission for OMB review; comment request, 15777
Grants and cooperative agreements; availability, etc.:
Safe Schools/Healthy Students Initiative, 15905–15909

Surface Transportation Board
NOTICES
Railroad operation, acquisition, construction, etc.:
CSX Transportation, Inc., 15869–15870

Toxic Substances and Disease Registry Agency
See Agency for Toxic Substances and Disease Registry

Transportation Department
See Coast Guard
See Federal Aviation Administration
See Research and Special Programs Administration
See Surface Transportation Board
NOTICES
Agency information collection activities:
Proposed collection; comment request, 15866–15867

Treasury Department
See Customs Service
See Fiscal Service
See Internal Revenue Service
NOTICES
Meetings:
Community Adjustment and Investment Program Advisory Committee, 15870

Western Area Power Administration
NOTICES
Environmental statements; availability, etc.:
Calpine Corp., Southpoint Power Plant Project; record of decision, 15744–15746

Separate Parts In This Issue

Part II
Nuclear Regulatory Commission, 15875–15903

Part III
Department of Education; Department of Justice, Juvenile Justice and Deliquency Prevention Office, 15905–15909

Part IV
Department of Transportation, Federal Aviation Administration, 15911–15914

Reader Aids
Consult the Reader Aids section at the end of this issue for phone numbers, online resources, finding aids, reminders, and notice of recently enacted public laws.

CFR PARTS AFFECTED IN THIS ISSUE

A cumulative list of the parts affected this month can be found in the Reader Aids section at the end of this issue.

5 CFR
890 15633

7 CFR
905 15634
944 15634

10 CFR
2 15636
10 15636
11 15636
25 15636
95 15636

Proposed Rules:
170 15876
171 15876

12 CFR
330 15653

13 CFR

Proposed Rules:
121 15708

14 CFR
39 (4 documents) 15657, 15659, 15661, 15669
71 (7 documents) 15673, 15674, 15675, 15676, 15678, 15679
91 15912

Proposed Rules:
71 15708

17 CFR
275 15680
279 15680

19 CFR

Proposed Rules:
146 15873

21 CFR
510 15683
520 (2 documents) 15683, 15684
522 (2 documents) 15683, 15685
558 15683

22 CFR
Ch. II 15685
Ch. VI 15686

26 CFR
1 (2 documents) 15686, 15687
7 15687
31 15687
602 (4 documents) 15687, 15688, 15873

33 CFR

Proposed Rules:
175 15709
177 15709
179 15709
181 15709
183 15709

40 CFR
52 15688

Proposed Rules:
52 15711

41 CFR
60-250 15690
60-999 15690

46 CFR

Proposed Rules:
10 15709
15 15709
24 15709
25 15709
26 15709
28 15709
70 15709
169 15709
175 15709

47 CFR

Proposed Rules:
73 (10 documents) 15712, 15713, 15714, 15715

50 CFR
17 15691
648 15704

Rules and Regulations

Federal Register
Vol. 64, No. 62
Thursday, April 1, 1999

This section of the FEDERAL REGISTER contains regulatory documents having general applicability and legal effect, most of which are keyed to and codified in the Code of Federal Regulations, which is published under 50 titles pursuant to 44 U.S.C. 1510.

The Code of Federal Regulations is sold by the Superintendent of Documents. Prices of new books are listed in the first FEDERAL REGISTER issue of each week.

OFFICE OF PERSONNEL MANAGEMENT

5 CFR Part 890

RIN 3206–AI33

Federal Employees Health Benefits Program: Contributions and Withholdings

AGENCY: Office of Personnel Management.

ACTION: Final rule.

SUMMARY: The Office of Personnel Management (OPM) is issuing final regulations under the Federal Employees Health Benefits (FEHB) law that specify procedures for OPM's annual determination of the weighted average of subscription charges, for self only and for self and family FEHB enrollments respectively. The determinations are a requirement under recent amendments to the FEHB law that authorize a new method for adjusting Government contributions toward health plan enrollment charges. Effective with the FEHB contract year that begins in January 1999, the Government contribution generally amounts to 72 percent of the weighted average of subscription charges in effect for self only and for self and family enrollments respectively.

DATES: This final regulation is effective May 3, 1999.

FOR FURTHER INFORMATION CONTACT: Bonnie R. Rose (202) 606–0004.

SUPPLEMENTARY INFORMATION: On August 28, 1998, OPM published interim regulations in the **Federal Register** (63 FR 45933) that amended 5 CFR 890.501, in paragraphs (a) and (b), to provide for the administration of a new Government contribution formula under the Federal Employees Health Benefits (FEHB) law.

The Balanced Budget Act of 1997, approved on August 5, 1997 (Pub. L. 105–33, sec. 7002, 111 Stat. 662), amended the FEHB law to authorize a new Government contribution formula effective on the first day of the contract year that begins in January 1999. In place of the ''Big-6'' formula, which evolved under FEHB law during the early 1970's, the new formula bases Government contributions on the program-wide weighted average costs, for self only and for self and family enrollments, respectively.

The Big-6 formula provided a Government contribution for eligible enrollees in any FEHB plan or option equal to the lesser of: (1) 60 percent of the simple average of self only or self and family enrollment charges for the highest level of benefits offered under six large plans described in law, or (2) 75 percent of charges for the particular plan an individual elects to enroll in. The intent of the new FEHB contribution formula, which is referred to as the ''Fair Share'' formula, is to maintain a consistent level of Government contributions, as a percent of the total program costs, regardless of the configuration of participating health plans or FEHB enrollment patterns.

The Fair Share formula requires a determination by the Office of Personnel Management (OPM) in advance of each contract year of the weighted average of subscription charges that will be in effect during the year under all FEHB plans, for self only and for self and family types of enrollment, respectively. For employees and annuitants generally, the law provides a Government contribution equal to the lesser of: (1) 72 percent of the amount OPM determines is the program-wide weighted average of subscription charges for the type of enrollment the individual selects, or (2) 75 percent of the subscription charge for a particular plan (5 U.S.C. 8906 (a) and (b)).

The FEHB law, as amended, is very clear regarding the methodology for determining the program-wide weighted average of subscription charges in cases where health plans continue participation from year to year. OPM's regulations explain how we intend to treat individual plans for purposes of determining the program-wide weighted average of subscription charges when the conditions of a plan's FEHB participation change from one year to the next, including cases in which plans enter the FEHB Program, cease participation, or merge with another FEHB plan, and cases in which a health maintenance organization alters its previous rating structure.

Also, the interim regulation deleted outdated provisions in paragraph 5 CFR 890.501(b), and the reference to paragraph (b) in 5 CFR 890.501(a), which reflected FEHB law prior to 1974 amendments to the Government contribution formula (Pub. L. 93–246, section 1, 88 Stat. 3).

We received no comments on the interim rule.

Regulatory Flexibility Act

I certify that these regulations will not have a significant economic impact on a substantial number of small entities because the regulations only affect Federal Government contributions toward enrollment costs under the Federal Employees Health Benefits Program.

Executive Order 12866, Regulatory Review

This rule has been reviewed by the Office of Management and Budget in accordance with Executive Order 12866.

List of Subjects in 5 CFR Part 890

Administrative practice and procedure, Government employees, Health facilities, Health insurance, Health professions, Hostages, Iraq, Kuwait, Lebanon, Reporting and recordkeeping requirements, Retirement.

Office of Personnel Management.

Janice R. Lachance,

Director.

Accordingly, under authority of 5 U.S.C. 8913, OPM is adopting its interim regulation amending 5 CFR part 890 as published on August 28, 1998 (63 FR 45933), as a final rule without change.

[FR Doc. 99–8011 Filed 3–31–99; 8:45 am]

BILLING CODE 6325–01–M

DEPARTMENT OF AGRICULTURE

Agricultural Marketing Service

7 CFR Parts 905 and 944

[Docket No. FV99–905–1 FIR]

Oranges, Grapefruit, Tangerines, and Tangelos Grown in Florida and Imported Grapefruit; Relaxation of the Minimum Size Requirement for Red Seedless Grapefruit

AGENCY: Agricultural Marketing Service, USDA.

ACTION: Final rule.

SUMMARY: The Department of Agriculture (Department) is adopting, as a final rule, without change, the provisions of an interim final rule relaxing the minimum size requirement for red seedless grapefruit and for red seedless grapefruit imported into the United States from size 48 (3 9/16 inches diameter) to size 56 (3 5/16 inches diameter) under the Florida citrus marketing order. The marketing order regulates the handling of oranges, grapefruit, tangerines, and tangelos grown in Florida and is administered locally by the Citrus Administrative Committee (Committee). This rule continues to allow handlers and importers to ship size 56 red seedless grapefruit through November 7, 1999, and is expected to maximize grapefruit shipments to fresh market channels.

EFFECTIVE DATE: May 3, 1999.

FOR FURTHER INFORMATION CONTACT: William G. Pimental, Southeast Marketing Field Office, Marketing Order Administration Branch, F&V, AMS, USDA, PO Box 2276, Winter Haven, Florida 33883; telephone: (941) 299–4770, Fax: (941) 299–5169; or George Kelhart, Technical Advisor, Marketing Order Administration Branch, F&V, AMS, USDA, room 2522–S, PO Box 96456, Washington, DC 20090–6456; telephone: (202) 720–2491, Fax: (202) 720–5698. Small businesses may request information on complying with this regulation, or obtain a guide on complying with fruit, vegetable, and specialty crop marketing agreements and orders by contacting Jay Guerber, Marketing Order Administration Branch, Fruit and Vegetable Programs, AMS, USDA, room 2525–S, PO Box 96456, Washington, DC 20090–6456; telephone: (202) 720–2491, Fax: (202) 720–5698, or E-mail: Jay__N__Guerber@usda.gov. You may also view the marketing agreements and orders small business compliance guide at the following web site: http://www.ams.usda.gov/fv/moab.html.

SUPPLEMENTARY INFORMATION: This rule is issued under Marketing Agreement No. 84 and Marketing Order No. 905, both as amended (7 CFR part 905), regulating the handling of oranges, grapefruit, tangerines, and tangelos grown in Florida, hereinafter referred to as the ''order.'' The marketing agreement and order are effective under the Agricultural Marketing Agreement Act of 1937, as amended (7 U.S.C. 601–674), hereinafter referred to as the ''Act.''

This rule is also issued under section 8e of the Act, which provides that whenever specified commodities, including grapefruit, are regulated under a Federal marketing order, imports of these commodities into the United States are prohibited unless they meet the same or comparable grade, size, quality, or maturity requirements as those in effect for the domestically produced commodities.

The Department of Agriculture (Department) is issuing this rule in conformance with Executive Order 12866.

This rule has been reviewed under Executive Order 12988, Civil Justice Reform. This rule is not intended to have retroactive effect. This rule will not preempt any State or local laws, regulations, or policies, unless they present an irreconcilable conflict with this rule.

The Act provides that administrative proceedings must be exhausted before parties may file suit in court. Under section 608c(15)(A) of the Act, any handler subject to an order may file with the Secretary a petition stating that the order, any provision of the order, or any obligation imposed in connection with the order is not in accordance with law and request a modification of the order or to be exempted therefrom. A handler is afforded the opportunity for a hearing on the petition. After the hearing, the Secretary would rule on the petition. The Act provides that the district court of the United States in any district in which the handler is an inhabitant, or has his or her principal place of business, has jurisdiction to review the Secretary's ruling on the petition, provided an action is filed not later than 20 days after the date of the entry of the ruling.

There are no administrative procedures which must be exhausted prior to any judicial challenge to the provisions of import regulations issued under section 8e of the Act.

The order for Florida citrus provides for the establishment of minimum grade and size requirements with the concurrence of the Secretary. The minimum grade and size requirements are designed to provide fresh markets with fruit of acceptable quality and size, thereby maintaining consumer confidence for fresh Florida citrus. This contributes to stable marketing conditions in the interest of growers, handlers, and consumers, and helps increase returns to Florida citrus growers. The current minimum grade standard for red seedless grapefruit is U.S. No. 1. The current minimum size requirement for domestic shipments is size 56 (at least 3 5/16 inches in diameter) through November 7, 1999, and size 48 (3 9/16 inches in diameter) thereafter. The current minimum size for export shipments is size 56 throughout the year.

This rule continues in effect changes to the order's rules and regulations relaxing the minimum size requirement for domestic shipments of red seedless grapefruit from size 48 (3 9/16 inches diameter) to size 56 (3 5/16 inches diameter) through November 7, 1999. This rule allows for the continued shipment of size 56 red seedless grapefruit. Absent this relaxation, the minimum size would be size 48 (3 9/16 inches diameter). The Committee met on September 3, 1998, and unanimously recommended this action.

Section 905.52 of the order, in part, authorizes the Committee to recommend minimum grade and size regulations to the Secretary. Section 905.306 (7 CFR 905.306) specifies minimum grade and size requirements for different varieties of fresh Florida grapefruit. Such requirements for domestic shipments are specified in § 905.306 in Table I of paragraph (a), and for export shipments in Table II of paragraph (b). This final rule continues the adjustment to Table I establishing a minimum size of 56 through November 7, 1999. Minimum grade and size requirements for grapefruit imported into the United States are currently in effect under § 944.106 (7 CFR 944.106). This final rule also continues the adjustment § 944.106 establishing a minimum size of 56 through November 7, 1999. Export requirements for Florida red seedless grapefruit are not changed by this rule.

In making its recommendation, the Committee considered estimated supply and demand. The supply of red seedless grapefruit is expected to be slightly higher than last season based on the Department's official crop estimate of 31,500,000 1 3/5 bushel boxes as compared to last season's utilized supply of 30,600,000 boxes. The fruit is expected to be high quality with a good appearance. The Committee reports that it expects fresh market demand to be sufficient to permit the shipment of size 56 red seedless grapefruit grown in

Florida during the entire 1998–99 season.

This size relaxation will enable Florida grapefruit shippers to continue shipping size 56 red seedless grapefruit to the domestic market. This rule will have a beneficial impact on producers and handlers, since it will permit Florida grapefruit handlers to make available those sizes of fruit needed to meet consumer needs. This is consistent with current and anticipated demand in those markets for the 1998–99 season, and will provide for the maximization of shipments to fresh market channels.

The Committee believes that domestic markets have been developed for size 56 fruit and that the industry should continue to supply those markets. This minimum size change pertains to the domestic market, and does not change the minimum size for export shipments which will continue at size 56 throughout the season. The largest market for size 56 small red grapefruit is for export.

During the first 11 weeks of the season (September 21 through December 6) a volume regulation limited the volume of small red seedless grapefruit entering the fresh market. That action was successful in moving smaller-sized fruit to those markets demanding such sizes (63 FR 51511, September 28, 1998; 64 FR 3807, January 26, 1999). The Committee agreed that this regulation helped reduce the negative effects of size 56 on the domestic market.

In addition, the currency and economic problems currently facing the Pacific Rim countries remain a concern. These countries traditionally have been good markets for size 56 grapefruit. Current conditions there could reduce demand for grapefruit, and alternative outlets need to be available. It will be advantageous to have the ability to ship size 56 red seedless grapefruit to the domestic market should problems materialize in the export market.

Based on available information, the Committee unanimously recommended that the minimum size for shipping red seedless grapefruit to the domestic market should be size 56 through November 7, 1999. This rule will have a beneficial impact on producers and handlers because it will permit Florida grapefruit handlers to make available those sizes of fruit needed to meet anticipated market demand for the 1998–99 season. Additionally, importers will be favorably affected by this change since the relaxation of the minimum size regulation will also apply to imported grapefruit.

Section 8e of the Act provides that when certain domestically produced commodities, including grapefruit, are regulated under a Federal marketing order, imports of that commodity must meet the same or comparable grade, size, quality, and maturity requirements. Since this rule continues to relax the minimum size requirement under the domestic handling regulations, a corresponding change to the import regulations is necessary.

Minimum grade and size requirements for grapefruit imported into the United States are currently in effect under § 944.106. This rule continues the minimum size requirement for imported red seedless grapefruit at 3 5/16 inches in diameter (size 56) until November 7, 1999, to reflect the relaxation under the order for red seedless grapefruit grown in Florida.

Pursuant to requirements set forth in the Regulatory Flexibility Act (RFA), the Agricultural Marketing Service (AMS) has considered the economic impact of this action on small entities. Accordingly, AMS has prepared this final regulatory flexibility analysis.

The purpose of the RFA is to fit regulatory actions to the scale of business subject to such actions in order that small businesses will not be unduly or disproportionately burdened. Marketing orders issued pursuant to the Act, and the rules issued thereunder, are unique in that they are brought about through group action of essentially small entities acting on their own behalf. Thus, both statutes have small entity orientation and compatibility. Import regulations issued under the Act are based on those established under Federal marketing orders.

There are approximately 80 grapefruit handlers subject to regulation under the order, approximately 11,000 growers of citrus in the regulated area, and about 25 grapefruit importers. Small agricultural service firms, which include handlers and importers, have been defined by the Small Business Administration (SBA) as those having annual receipts of less than $5,000,000, and small agricultural producers are defined as those having annual receipts of less than $500,000 (13 CFR 121.601).

Based on the industry and Committee data for the 1997–98 season, the average annual f.o.b. price for fresh Florida red seedless grapefruit during the 1997–98 season was around $6.30 per 4/5 bushel cartons, and total fresh shipments for the 1997–98 season are estimated at 15.5 million cartons of red seedless grapefruit. Approximately 20 percent of all handlers handled 60 percent of Florida grapefruit shipments. In addition, many of these handlers ship other citrus fruit and products which are not included in Committee data but would contribute further to handler receipts. Using the average f.o.b. price, about 80 percent of the Florida grapefruit handlers could be considered small businesses under the SBA definition and about 20 percent of the handlers could be considered large businesses. The majority of grapefruit handlers, growers, and importers may be classified as small entities.

Florida handlers shipped approximately 42,410,000 4/5 bushel cartons of grapefruit to the fresh market during the 1997–98 season. Of these cartons, about 21,860,000 were exported. In the past three seasons, domestic shipments of Florida grapefruit averaged about 21,148,000 cartons. During the period 1991 through 1996, imports have averaged 734,800 cartons a season. Imports account for less than five percent of domestic shipments.

Section 905.52 of the order, in part, authorizes the Committee to recommend minimum grade and size regulations to the Secretary. Section 905.306 specifies minimum grade and size requirements for different varieties of fresh Florida grapefruit. This rule continues to relax the minimum size requirement for domestic shipments of red seedless grapefruit from size 48 (3 9/16 inches diameter) to size 56 (3 5/16 inches diameter) through November 7, 1999. No change is being made in the minimum size 56 requirement for export shipments. Absent this relaxation, the minimum size requirement for domestic shipments would be size 48. The motion to allow shipments of size 56 red seedless grapefruit through November 7, 1999, was passed by the Committee unanimously. In addition, there was a volume regulation in effect for the first 11 weeks of this season (September 21 through December 6) that limited the volume of small red seedless grapefruit entering the fresh market (63 FR 51511, September 28, 1998; 64 FR 3807, January 26, 1999).

This rule will have a positive impact on affected entities. This action allows for the continued shipment of size 56 red seedless grapefruit. This change is not expected to increase costs associated with the order requirements.

This rule continues to relax the minimum size from size 48 (3 9/16 inches diameter) to size 56 (3 5/16 inches diameter) through November 7, 1999. This change will allow handlers to continue to ship size 56 red seedless grapefruit to the domestic market. This rule will have a beneficial impact on producers and handlers, since it will permit Florida grapefruit handlers to make available those sizes of fruit needed to meet consumer needs. This is consistent with current and anticipated

demand in those markets for the 1998–99 season, and will provide for the maximization of shipments to fresh market channels.

The currency and economic problems currently facing the Pacific Rim countries remain a concern. These countries traditionally have been good markets for size 56 grapefruit. Current conditions there could reduce demand for grapefruit, and alternative outlets need to be available. It will be advantageous to have the ability to ship size 56 red seedless grapefruit to the domestic market should problems materialize in the export market.

This change will allow for the continued shipment of size 56 red seedless grapefruit. The opportunities and benefits of this rule are expected to be equally available to all grapefruit handlers, growers, and importers regardless of their size of operation.

In 1996, imports of grapefruit totaled 15,000 tons (approximately 705,880 cartons). The Bahamas were the principal source, accounting for 95 percent of the total. Remaining imports were supplied by the Dominican Republic and Israel. Imported grapefruit enters the United States from October through May. Imports account for less than five percent of domestic shipments.

Section 8e of the Act provides that when certain domestically produced commodities, including grapefruit, are regulated under a Federal marketing order, imports of that commodity must meet the same or comparable grade, size, quality and maturity requirements. Because this rule changes the minimum size for domestic red seedless grapefruit shipments, this change will also be applicable to imported grapefruit. This rule relaxes the minimum size to size 56. This regulation will benefit importers to the same extent that it benefits Florida grapefruit producers and handlers because it allows shipments of size 56 red seedless grapefruit into U.S. markets through November 7, 1999.

The Committee considered one alternative to this action. The Committee discussed relaxing the minimum size to size 56 on a permanent basis rather than just for a year. Members said that each season is different, and they prefer to consider this issue on a yearly basis. Therefore, this alternative was rejected.

This rule will not impose any additional reporting or recordkeeping requirements on either small or large red seedless grapefruit handlers or importers. As with all Federal marketing order programs, reports and forms are periodically reviewed to reduce information collection requirements and duplication by industry and public sectors.

In addition, the Department has not identified any relevant Federal rules that duplicate, overlap or conflict with this rule. However, red seedless grapefruit must meet the requirements as specified in the U.S. Standards for Grades of Florida Grapefruit (7 CFR 51.760 through 51.784) issued under the Agricultural Marketing Act of 1946 (7 U.S.C. 1621 through 1627).

Further, the Committee's meeting was widely publicized throughout the citrus industry and all interested persons were invited to attend the meeting and participate in Committee deliberations. Like all Committee meetings, the September 3, 1998, meeting was a public meeting and all entities, both large and small, were able to express their views on this issue. Finally, interested persons were invited to submit information on the regulatory and informational impacts of this action on small businesses.

In accordance with section 8e of the Act, the United States Trade Representative has concurred with the issuance of this final rule.

An interim final rule concerning this action was published in the **Federal Register** on November 10, 1998 (63 FR 62919). Copies of the rule were mailed by the Committee's staff to all Committee members and grapefruit handlers. In addition, the rule was made available through the Internet by the Office of the Federal Register. That rule provided for a 60-day comment period which ended January 11, 1999. No comments were received.

After consideration of all relevant material presented, including the Committee's recommendation, and other information, it is found that finalizing the interim final rule, without change, as published in the **Federal Register** (63 FR 62919, November 10, 1998) will tend to effectuate the declared policy of the Act.

List of Subjects

7 CFR Part 905

Grapefruit, Marketing agreements, Oranges, Reporting and recordkeeping requirements, Tangelos, Tangerines.

7 CFR Part 944

Avocados, Food grades and standards, Grapefruit, Grapes, Imports, Kiwifruit, Limes, Olives, Oranges.

PART 905—ORANGES, GRAPEFRUIT, TANGERINES, AND TANGELOS GROWN IN FLORIDA

PART 944—FRUITS; IMPORT REGULATIONS

Accordingly, the interim final rule amending 7 CFR parts 905 and 944 which was published at 63 FR 62919 on November 10, 1998, is adopted as a final rule without change.

Dated: March 26, 1999.

Robert C. Keeney,

Deputy Administrator, Fruit and Vegetable Programs.

[FR Doc. 99–8067 Filed 3–31–99; 8:45 am]

BILLING CODE 3410–02–P

NUCLEAR REGULATORY COMMISSION

10 CFR Parts 2, 10, 11, 25, and 95

RIN 3150–AF97

Conformance to National Policies For Access to and Protection of Classified Information

AGENCY: Nuclear Regulatory Commission.

ACTION: Final rule.

SUMMARY: The Nuclear Regulatory Commission (NRC) is amending its regulations to conform the requirements for the protection of and access to classified information to new national security policy documents. This final rule is necessary to ensure that classified information in the possession of NRC licensees, certificate holders, and others under the NRC's regulatory requirements is protected in accordance with current national policies.

EFFECTIVE DATE: May 3, 1999.

FOR FURTHER INFORMATION CONTACT: James J. Dunleavy, Division of Facilities and Security, Office of Administration, U.S. Nuclear Regulatory Commission, Washington, DC 20555–0001 telephone (301) 415–7404, E-mail JJD1@NRC.GOV.

SUPPLEMENTARY INFORMATION:

I. Background

On August 3, 1998 (63 FR 41206), the NRC published a proposed rule in the **Federal Register** to amend 10 CFR parts 10, 11, 25, and 95 to conform its requirements for the protection of classified Information at licensee, certificate holder and other facilities to new national security policy documents. The national requirements for the protection of and access to classified National Security Information were revised by the issuance of the

National Industrial Security Program Operating Manual (NISPOM), Executive Order 12958, ''Classified National Security Information,'' dated April 17, 1995, and Executive Order 12968, ''Access to Classified Information,'' dated August 2, 1995. The final rule amends the provisions of 10 CFR parts 2, 10, 11, 25, and 95 that deal with requirements for access to and protection of classified information that have been changed or added by the NISPOM, the executive orders, or new national guidelines on the scope and adjudication of personnel security investigations. Specifically, changes include a new definition in 10 CFR part 10 for the ''Personnel Security Review Panel'' and revisions to a number of definitions in parts 10, 11, 25, and 95 to reflect a change in the name of the Division of Security to the Division of Facilities and Security. Additionally, several changes to definitions were made to reflect: A change in responsibility for certain decisions from the Executive Director for Operations to the Deputy Executive Director for Management Services; revised due process procedures; a new requirement for a facility clearance for those licensees or others who require access to classified information at a facility other than their own; additional information on the scope and reporting requirements for the Foreign Ownership, Control, or Influence (FOCI) program; a requirement to resubmit an update to the Security Practice Procedures Plan every five years; a requirement for a visitor control program; and greater specificity as to when particular reports are required.

The rule also adopts new requirements in areas where the executive orders, the NISPOM, or the adjudicative guidelines require specific procedures not included in the previous versions of the rules. These new requirements include: The change to a three member Personnel Security Review Panel from three Review Examiners, acting individually, reviewing the record of a case where an individual's eligibility for access authorization or employment clearance is in question; an explicit notification that individuals whose eligibility for access authorization or employment clearance is in question have the right to be represented by counsel or other representative at their own expense and that they have a right to the documents, records, and reports which form the basis for the question of their eligibility to the extent they are unclassified and do not reveal a confidential source, and to the entire investigative file, as permitted by national security and other applicable law; a change to the period between reinvestigations for ''L'' and ''R'' access authorizations from five years to ten years; a change to the fee schedules of 10 CFR parts 11 and 25 due to a change in the investigative requirements for ''Q,'' ''L,'' ''U,'' and ''R'' access authorizations; and changing the security classification markings to conform to Executive Order 12958.

The rule also eliminates the proposed changes to §§ 25.15 and 95.35 that would have permitted access to most Secret Restricted Data based on an ''L'' clearance rather than a ''Q'' clearance.

The rule also incorporates a change to §§ 25.11 and 95.11, ''Specific exemptions,'' to clarify requirements for requesting and approving exemptions. This change was based on experience with exemption requests following publication of the proposed rule and is intended to follow more closely the language of § 50.12, ''Specific exemptions.''

Finally, the rule amends paragraph 11.15(e)(1) and appendix A to 10 CFR part 25 to reflect recent Office of Personnel Management investigative cost changes. Most of the changes have resulted in significant cost decreases for affected parties. For example, the cost of a single scope background investigation for a ''U'' or ''Q'' access authorization is reduced from $3275 to $2856. Where costs have increased, it has been on the order of two to three dollars.

II. Comments on the Proposed Rule

The Commission received three letters commenting on the proposed rule, one from the U.S. Enrichment Corporation, one from the Department of Defense (DoD), and one from the Department of Energy (DOE). Copies of the letters are available for public inspection and copying for a fee at the Commission's Public Document Room, located at 2120 L Street, NW. (Lower Level), Washington, DC.

Comments from the USEC

Comment: The commenter provided a comment on 10 CFR 2.790(d), ''Public inspections, exemptions, requests for withholding.'' They stated that ''10 CFR 2.790(d) now provides for protection of a licensee's physical security plan and material control and accounting program documents. It seems appropriate to protect classified matter protection plans from public disclosure in the same way as physical security plans and fundamental nuclear material controls plans are protected.''

Response: Classified matter protection plans have always been considered as a part of the physical protection plan and have been protected from public disclosure. NRC, however, has no objection to clarifying this issue in the rulemaking and has adopted the recommendation by adding ''classified matter protection'' to § 2.790(d).

Comment: The commenter recommended that § 11.3 be clarified to indicate more prominently that the scope of the rule is only applicable to those licensees who possess formula quantities of strategic special nuclear material.

Response: Section 11.3 has been modified for clarity.

Comment: The commenter noted that ''As currently described in 10 CFR 95.5, a container must have both a ''Test Certification Label'' *and* a ''General Services Administration Approved Security Container'' marking to qualify as a ''Security Container.'' Since either reflects acceptable qualification, one or the other should be adequate and both should not be required.''

Response: Section 95.5 has been modified for clarity.

Comment: The commenter stated that ''It is unclear (to USEC) what constitutes a significant event or change affecting foreign ownership, control, or influence (FOCI). It is our understanding that the NRC is responsible for making FOCI determinations. Therefore, the NRC should establish criteria that licensees and certificate holders can use to make the determination of what events/changes should be reported to the NRC. For example, in 10 CFR 95.19(b) the NRC has described what 'minor, non-substantive changes' include.''

Response: The rule language in 10 CFR 95.17 has been modified to describe the types of significant changes that will require NRC notification.

Comment: The commenter stated that ''The language of 10 CFR 95.19(a) indicates that *any* change to the security procedures and controls would require the certificate holder to obtain prior Cognizant Security Agency (CSA) approval. The rule, however, only requires prior approval of *substantive* changes. Further, the language is inconsistent with other parts of the regulations with regard to the definition of ''substantive.'' Section 50.54(p)(1), the process followed by the agency concerning the preparation and maintenance of safeguards contingency plan procedures for part 50 licensees, describe substantive changes as those that decrease the effectiveness of the security plan. Therefore, to (i) clarify that prior approval is only needed for substantive changes, and (ii) be consistent with other parts of the regulations, USEC requests that the rule

language in 10 CFR 95.19(a) be modified. * * *''

Response: It has always been NRC policy that only substantive changes require prior CSA approval. Section 95.19(a) clearly states, ''Except as specified in paragraph (b) of this section each licensee * * * shall obtain prior approval * * *.'' Section 95.19(b) states ''A licensee or other person may effect a minor, non-substantive change to an approved Standard Practice Procedures Plan for the safeguarding of classified matter without receiving prior CSA approval * * *.'' The current language is clear. The examples cited as substantive changes in § 95.19(a) fully qualify as changes affecting the security of NRC classified matter. If a licensee were to change a classified mailing address without notification to the CSA, it is likely that other facilities would continue to send classified information to the old classified mailing address which was no longer qualified to receive it. That would create a serious threat of compromise to the information. The change to a new location for the approved facility would have potential major impacts on the security of the classified matter. Facility approval is granted based on the physical and procedural safeguards at a given location. If a licensee could move the facility without prior approval, it would be very similar to granting the right to initially approve themselves. Therefore these comments have not been adopted.

Comment: The commenter indicated that ''10 CFR 95.25(i) requires the inventory of a container found open. Because the NRC does not require an initial inventory of container contents, it is not clear what purpose the latter inventory serves. Regulations (10 CFR 95.41) were revised in 1996 to remove inventory requirements for classified documents, with the exception of external receipt and dispatch records. Further, inventories may no longer have much meaning since documents, computer disks, and other ADP media are easily copied with today's technology. Finally, 10 CFR 95.25(i) has reporting language that is unnecessary and should be eliminated. Finding an open security container would constitute an infraction and would, therefore, be reportable under 10 CFR 95.57.''

Response: For the reasons cited by the commenter, the rule language in Section 95.25(i) has been modified to eliminate the requirements for an inventory and report.

Comment: The commenter stated that ''10 CFR 95.25(j)(7) requires that keys and spare locks be changed or rotated every 12 months. It is not clear why locks and keys are treated differently than combinations. Combinations only require change out if evidence of compromise exists. Changing locks every 12 months can be an expensive procedure at a large facility employing several thousand people.'' Because both devices serve the same purpose (i.e., physical controls which deny access to classified matter), the commenter believes they should be treated consistently.

Response: Although the comment is not unreasonable, the national requirement, as reflected in section 5–310, ''Supervision of Keys and Padlocks,'' of the NISPOM, is explicit. It states, ''Use of key-operated padlocks are subject to the following requirements: (i) A key and lock custodian shall be appointed to ensure proper custody and handling of keys and locks used for protection of classified material; * * *; (vii) locks shall be changed or rotated at least annually, and shall be replaced after loss or compromise of their operable keys; * * *'' The NRC requirement is a direct implementation of the national policy.

Comment: The commenter noted that ''10 CFR 95.33(f) provides an example of the type of refresher briefing that would be appropriate to meet the requirements of this section, namely, the use of ''audio/video materials and by issuing written materials.'' The example appears to preclude written or audio/video by themselves, both of which are adequate training tools. The commenter requests that the rule language in 10 CFR 95.33(f) be modified to permit either audio-visual or written materials.

Response: It has never been NRC's intent to require both audio-visual *and* written materials. We agree with the commenter that either alone, or both together, is an acceptable approach. The paragraph has been modified to clarify this point.

Comment: The commenter noted that ''10 CFR 95.34(b)(1) requires that certain information concerning foreign visitors be provided to the NRC 60 days in advance of the visit. USEC operates a commercial uranium enrichment facility and already implements a security program which precludes the dissemination/exposure of classified information to Foreign Nationals. * * * As a commercial operation with extensive foreign customers, USEC cannot operate under such conditions. Our security program has already been reviewed and determined to be effective in precluding foreign nationals from gaining access to classified information. Security plans for all visits by foreign nationals are prepared, maintained, and available for review by the NRC. In this way, the NRC can still track the movement of foreign nationals and analyze potential threats. * * * Finally, the retention period for maintenance of records described in 10 CFR 95.34(b)(2) calls for five years. It does not appear that this change is related to the National Industrial Security Program.''

Response: Although the NISPOM requires security controls for foreign nationals, it does not contain a requirement for a 60-day advance notification of visits by foreign nationals. NRC agrees that the proposed 60-day requirement is not needed and that the existing controls dealing with foreign nationals are adequate. However, the requirement to maintain the records of these visits for five years is consistent with the NRC requirements under § 95.36 for the International Atomic Energy Agency (IAEA) inspectors. NRC has modified § 95.34 to remove the 60-day notification requirement but is maintaining the five-year recordkeeping requirement.

Comment: The commenter noted that the proposed changes to § 95.35 ''. * * * could save hundreds of thousands of dollars by essentially eliminating the need for ''Q'' clearances at our facilities. However, USEC clearances are maintained by the DOE and we are required to follow DOE personnel security regulations per NRC/DOE agreement. And although the Secretary of Energy signed the National Industrial Security Program required by Presidential Executive Order, it should be noted that, DOE's Office of Safeguards and Security does not endorse this concept. This discrepancy between the two agencies may result in complications for USEC.''

Response: As noted below, DOE strongly objects to a reduction in the investigative requirements for access to Secret Restricted Data until such time as DOE and DoD reconcile their significant differences in the protection requirements of Secret Restricted Data. Because DOE rather than NRC maintains security clearances for the commenter, USEC apparently desires to avoid complications that may result from differing standards between NRC and DOE. The commenter is the organization that would be most affected by this change. No other licensee or certificate holder commented on this change. NRC has decided to withdraw the proposed change and allow the current requirements to remain in effect until DOE and DoD reconcile their significant differences in the protection requirements of Secret Restricted Data.

Comment: The commenter stated that ''while the proposed regulations

(§ 95.57) should reduce the number of telephonic reports, it will not decrease the greater administrative burden on the certificate holder created by the required written reports. NRC should adopt a reporting system similar to that used by the power reactor industry and required by 10 CFR 73.71. Specifically, 10 CFR 95.57(a) should explain what type of event would require a one hour report (similar to 10 CFR 73.71(a)(1)). * * * Similarly, 10 CFR 95.57(b) should be revised to include those events not rising to the level of events described in 10 CFR 95.57(a). Events involving infractions, losses, or compromises should be logged for review. All loggable events should be sent to the NRC on a quarterly basis. * * * The requirement for 30 day written reports (follow up) should be eliminated for all except one hour reports. Experience has shown that these follow up reports involve extensive review by management and are time intensive. By using the logging process identified in 10 CFR 73.71, the NRC would still receive written indication of an event for inspection review or follow up. Such loggable events could show corrective actions or problem report numbers for further review if desired. Also, the NRC should consider a single point of contact for reportable events. The proposed reporting requirements require multiple reports within NRC. * * * Experience has shown that time delays may occur before the proper NRC individual can be located. This places severe time constraints on a licensee/certificate holder who must make a determination for reporting and notify two separate offices within the NRC of an event. USEC believes that the criteria for submission of NRC Form 790 more appropriately belongs in § 95.37, ''Classification and Preparation of Documents.'' Additionally, NRC has changed the requirement for submission of Form 790 from monthly to ''* * * as completed basis or every 30 days.'' Typically, the NRC has used the 30 day time period for submission of reports or events, not standard document submission. Because USEC files this form on a regular basis, we prefer to keep the current wording, * * * on a monthly basis. * * *''

Response: NRC agrees that examples of events requiring one-hour reporting should be included and § 95.57(a) has been revised to include these examples. NRC is also amenable to reducing the formal reporting requirements for security infractions to accommodate the logging procedure recommended by the commenter. We do not agree that quarterly reporting is adequate and have changed the rule to provide for submission of logs on a monthly basis. NRC does not agree that a single point of contact is practical for events of a high level of significance (note that we have agreed above to significantly reduce the number of events that will qualify for one-hour reporting). Because only truly serious events will now qualify, it is important that both the CSA and the NRC regional office be notified promptly. This change has not been adopted. NRC agrees that restoring the reporting requirement for the NRC Form 790 to ''monthly'' is acceptable and has so revised § 95.57(c). However, NRC will not remove the ''as completed'' option for those entities that prefer to submit information electronically as documents are classified. NRC does not see any particular advantage to moving the reporting requirement to a different paragraph and has not adopted that recommendation. The commenter also provided comments on the NRC document, ''Standard Practice Procedures Plan Standard Format and Content for the Protection of Classified Matter for NRC Licensees, Certificate Holder, and Related Organizations,'' which is not a part of this rulemaking.

Comments From the DoD

Comment: The commenter noted that ''During the development of the NISPOM, it became necessary to resolve dissimilar requirements for the handling of RD between the Department of Energy, the Commission, and this Department. For the past 40+ years, the Defense Department has successfully handled and stored RD according to its classification level, protecting SECRET/RD as SECRET national security information. * * * We have been working to resolve these differing requirements since 1995 * * * and that * * * in the interim, in (their) view * * * unnecessarily costly background investigations are continuing to be run in Energy and the Commission for access to the same information that is accessed based on a lesser investigation in the Defense Department. * * * Therefore, the Defense Department fully supports §§ 25.15 and 95.35 of the referenced proposed rule.''

Response: NRC does not have significant numbers of licensee or certificate holder personnel with ''Q'' clearances. Most of those with ''Q'' clearances are at USEC. USEC commented that a discrepancy between DOE and NRC personnel security requirements for access to Secret Restricted Data may result in complications for USEC. As noted above, NRC has elected not to make these revisions to its rules until DOE and DoD reconcile their significant differences in the protection requirements of Secret Restricted Data.

Comments from the Department of Energy (DOE)

Comment: The commenter stated that they ''. * * * have significant concerns that this rule, if amended as stated in your proposal, will compromise some of the nations most sensitive nuclear weapons information. Our position remains unchanged from our comment to the previous revision to this regulation. During the process of developing a single security standard for. * * * the protection of classified information, it was discovered that significant differences existed between the Department of Energy and the Department of Defense in the protection of Secret Restricted Data. * * * The two agencies agreed to work toward a solution. We are still in the process of reconciling those differences. * * * Neither the NISPOM nor the NISPOM Supplement allow for access to Secret Restricted Data based on an ''L'' access authorization. * * * When information is created, there is no distinction within Secret Restricted Data of ''critical'' or ''nuclear weapons design, manufacturing, or vulnerability.'' Without the identification and marking of this type of information, the implementation of the requirement within NRC would be impossible. If this requirement were implemented, it poses a potential threat to Secret Restricted Data, that is, this country's most sensitive weapons design information being accessed by ''L'' cleared individuals.''

Response: As stated above, because DOE strongly objects to changing the rule until DOE and DoD reconcile their significant differences in the protection requirements of Secret Restricted Data, and USEC, the organization most affected by this aspect of the rule, advised that a discrepancy between DOE and NRC on this issue may result in complications for them, NRC has decided not to modify §§ 25.15 and 95.35 at this time.

III. The Final Rule

With the exception of the items addressed under ''Comments on the Proposed Rule,'' clarifying changes to §§ 25.11 and 95.11, ''Specific exemptions,'' a slight change to fees charged for investigations in § 11.15 and Appendix A to 10 CFR part 25, and minor editorial and clarifying changes, the final rule is the same as the proposed rule. The specific changes from the proposed rule are—

- A slight modification to § 2.790(d) to clarify that it applies to plans for the protection of classified matter;
- A modification to § 10.22(d) to clarify what information may be provided to an individual whose eligibility for access authorization is in question;
- A slight modification to § 11.3 to clarify that it only applies to facilities posessing formula quantities of strategic special nuclear material;
- A change to the fees charged for personnel security investigations in § 11.15 and Appendix A to 10 CFR part 25;
- Modifications to §§ 25.11 and 95.11, ''Specific exemptions,'' to clarify requirements for requesting and approving exemptions. This change is based on experience with exemption requests following publication of the proposed rule and more closely follows the language of § 50.12, ''Specific exemptions.''
- The proposed changes to §§ 25.15 and 95.35 have been withdrawn;
- A clarification of the definition of ''Security Container'' in § 95.5;
- The provision of several examples of what constitutes ''significant events or changes'' affecting the Foreign Ownership, Control or Influence status of a facility in § 95.17;
- Section 95.25(i) has been changed to eliminate the requirement to inventory the contents of a security container found open;
- Section 95.33 has been changed to permit either audio-visual or written materials for security education;
- Section 95.34 has been changed to eliminate the requirement for a 60-day advance notice to NRC visits by foreign nationals; and
- Section 95.57 has been changed to provide examples of the types of events that would require one-hour reporting, to reduce the number of events requiring one-hour reporting, and to replace some of the existing reports with a log maintained by a licensee/ certificate holder.

Small Business Regulatory Enforcement Fairness Act

In accordance with the Small Business Regulatory Enforcement Fairness Act of 1996, the NRC has determined that this action is not a major rule and has verified this determination with the Office of Information and Regulatory Affairs of OMB.

Environmental Impact: Categorical Exclusion

The NRC has determined that this final rule is the type of action described as a categorical exclusion in 10 CFR 51.22(c)(1). Therefore, neither an environmental impact statement nor an environmental assessment has been prepared for this final rule.

Paperwork Reduction Act Statement

This final rule amends information collection requirements that are subject to the Paperwork Reduction Act of 1995 (44 U.S.C. 3501, *et seq.*). These requirements were approved by the Office of Management and Budget, approval numbers 3150–0046, 3150–0047, 3150–0050, and 3150–0062. The public reporting burden for this information collection is estimated to average 12.5 hours per response, including the time for reviewing instructions, searching existing data sources, gathering and maintaining the data needed, and completing and reviewing the information collection. The average burden hours per response for the proposed rule was estimated at 8.3 hours instead of 7.5 hours because the recordkeeping hours were not included in the burden estimate. The final rule burden increase includes the reduction of 8 responses and 4 burden hours because of the deletion of the requirement at 10 CFR 95.34(b)(1) for advance notification of foreign visitors. Send comments on any aspect of this information collection, including suggestions for reducing the burden, to the Records Management Branch (T–6 F33), U.S. Nuclear Regulatory Commission, Washington, DC 20555–0001, or by Internet electronic mail at BJS1@NRC.GOV; and to the Desk Officer, Office of Information and Regulatory Affairs, NEOB–10202, (3150–0046, –0047, –0050, and –0062), Office of Management and Budget, Washington, DC 20503.

Public Protection Notification

If a means used to impose an information collection does not display a currently valid OMB control number, the NRC may not conduct or sponsor, and a person is not required to respond to, the information collection.

Regulatory Analysis

The Commission has prepared a regulatory analysis for this final regulation. The analysis examines the costs and benefits of the alternatives considered by the Commission. The analysis is available for inspection in the NRC Public Document Room, 2120 L Street, NW (Lower Level), Washington, DC. Single copies of the analysis may be obtained from James J. Dunleavy, Division of Facilities and Security, Office of Administration, U. S. Nuclear Regulatory Commission, Washington, DC 20555, telephone: (301) 415–7404, e-mail: JJD1@nrc.gov.

Regulatory Flexibility Certification

As required by the Regulatory Flexibility Act of 1980, 5 U.S.C. 605(b), the Commission certifies that this rule will not have a significant economic impact upon a substantial number of small entities. The NRC carefully considered the effect on small entities in developing this final rule on the protection of classified information and has determined that none of the facilities affected by this rule would qualify as a small entity under the NRC's size standards (10 CFR 2.810).

Backfit Analysis

The NRC has determined that the backfit rules in 10 CFR 50.109 and 76.76 apply to this rulemaking initiative because it falls within the criteria in 10 CFR 50.109(a)(1) and 76.76(a)(1). However, a backfit analysis is not required because this rulemaking falls under the 10 CFR 50.109(a)(4)(iii) and 76.76(a)(4)(iii) exceptions for a regulatory action that involves ''redefining what level of protection to the . . . common defense and security should be regarded as adequate.'' Furthermore, the NRC has determined that this rulemaking does not constitute a backfit under the backfit rule in 10 CFR 72.62(a).

List of Subjects

10 CFR Part 2

Administrative practice and procedure, Antitrust, Byproduct material, Classified information, Environmental protection, Nuclear material, Nuclear power plants and reactors, Penalties, Sex discrimination, Source material, Special nuclear material, Waste treatment and disposal.

10 CFR Part 10

Administrative practice and procedure, Classified information, Criminal penalties, Investigations, Security measures.

10 CFR Part 11

Hazardous materials—transportation, Investigations, Nuclear Materials, Reporting and recordkeeping requirements, Security measures, Special nuclear material.

10 CFR Part 25

Classified information, Criminal penalties, Investigations, Reporting and recordkeeping requirements, Security measures.

10 CFR Part 95

Classified information, Criminal penalties, Reporting and recordkeeping requirements, Security measures.

For the reasons set out in the preamble and under the authority of the Atomic Energy Act of 1954, as amended; the Energy Reorganization Act of 1974, as amended; and 5 U.S.C. 553; the NRC is adopting the following amendments to 10 CFR parts 2, 10, 11, 25, and 95.

PART 2—RULES OF PRACTICE FOR DOMESTIC LICENSING PROCEEDINGS AND ISSUANCE OF ORDERS

1. The authority citation for part 2 continues to read as follows:

Authority: Secs.161, 181, 68 Stat. 948, 953, as amended (42 U.S.C. 2201, 2231); sec. 191, as amended, Pub. L. 87–615, 76 Stat. 409 (42 U.S.C. 2241); sec. 201, 88 Stat.1242, as amended (42 U.S.C. 5841); 5 U.S.C. 552.

Section 2.101 also issued under secs. 53, 62, 63, 81, 103, 104, 105, 68 Stat. 930, 932, 933, 935, 936, 937, 938, as amended (42 U.S.C. 2073, 2092, 2093, 2111, 2133, 2134, 2135); sec. 114(f), Pub. L. 97–425, 96 Stat. 2213, as amended (42 U.S.C. 10134(f)); sec. 102, Pub. L. 91–190, 83 Stat. 853, as amended (42 U.S.C. 4332); sec. 301, 88 Stat. 1248 (42 U.S.C. 5871). Sections 2.102, 2.103, 2.104, 2.105, 2.721 also issued under secs. 102, 103, 104, 105, 183, 189, 68 Stat. 936, 937, 938, 954, 955, as amended (42 U.S.C. 2132, 2133, 2134, 2135, 2233, 2239). Section 2.105 also issued under Pub. L. 97–415, 96 Stat. 2073 (42 U.S.C. 2239). Sections 2.200–2.206 also issued under secs. 161 b, i, o, 182, 186, 234, 68 Stat. 948–951, 955, 83 Stat. 444, as amended (42 U.S.C. 2201 (b), (i), (o), 2236, 2282); sec. 206, 88 Stat 1246 (42 U.S.C. 5846). Sections 2.205(j) also issued under Pub. L. 101–410, 104 Stat. 890, as amended by section 31001(s), Pub. L. 104–134, 110 Stat. 1321–373 (28 U.S.C. 2461 note). Sections 2.600–2.606 also issued under sec. 102, Pub. L. 91–190, 83 Stat. 853, as amended (42 U.S.C. 4332). Sections 2.700a, 2.719 also issued under 5 U.S.C. 554. Sections 2.754, 2.760, 2.770, 2.780 also issued under 5 U.S.C. 557. Section 2.764 also issued under secs. 135, 141, Pub. L. 97–425, 96 Stat. 2232, 2241 (42 U.S.C. 10155, 10161). Section 2.790 also issued under sec. 103, 68 Stat. 936, as amended (42 U.S.C. 2133) and 5 U.S.C. 552. Sections 2.800 and 2.808 also issued under 5 U.S.C. 553. Section 2.809 also issued under 5 U.S.C. 553 and sec. 29, Pub. L. 85–256, 71 Stat. 579, as amended (42 U.S.C. 2039). Subpart K also issued under sec. 189, 68 Stat. 955 (42 U.S.C. 2239); sec. 134, Pub. L. 97–425, 96 Stat. 2230 (42 U.S.C. 10154). Subpart L also issued under sec. 189, 68 Stat. 955 (42 U.S.C. 2239). Appendix A also issued under sec. 6, Pub. L. 91–560, 84 Stat. 1473 (42 U.S.C. 2135).

2. In § 2.790 paragraph (d)(1) is revised to read as follows:

§ 2.790 Public Inspections, exemptions, requests for withholding.

* * * * *

(d) * * *

(1) Correspondence and reports to or from the NRC which contain information or records concerning a licensee's or applicant's physical protection, classified matter protection, or material control and accounting program for special nuclear material not otherwise designated as Safeguards Information or classified as National Security Information or Restricted Data.

* * * * *

PART 10—CRITERIA AND PROCEDURES FOR DETERMINING ELIGIBILITY FOR ACCESS TO RESTRICTED DATA OR NATIONAL SECURITY INFORMATION OR AN EMPLOYMENT CLEARANCE

3. The authority citation for part 10 is revised to read as follows:

Authority: Secs. 145, 161, 68 Stat. 942, 948, as amended (42 U.S.C. 2165, 2201); sec. 201, 88 Stat. 1242, as amended (42 U.S.C. 5841); E.O. 10450, 3 CFR parts 1949—1953 COMP., p. 936, as amended; E.O. 10865, 3 CFR 1959–1963 COMP., p. 398, as amended; 3 CFR Table 4.; E.O. 12968, 3 CFR 1995 COMP., p.396.

4. Section 10.1 is revised to read as follows:

§ 10.1 Purpose.

(a) This part establishes the criteria, procedures, and methods for resolving questions concerning:

(1) The eligibility of individuals who are employed by or applicants for employment with NRC contractors, agents, and licensees of the NRC, individuals who are NRC employees or applicants for NRC employment, and other persons designated by the Deputy Executive Director for Management Services of the NRC, for access to Restricted Data pursuant to the Atomic Energy Act of 1954, as amended, and the Energy Reorganization Act of 1974, or for access to national security information; and

(2) The eligibility of NRC employees, or the eligibility of applicants for employment with the NRC, for employment clearance.

(b) This part is published to implement the Atomic Energy Act of 1954, as amended, the Energy Reorganization Act of 1974, as amended, Executive Order 10865, 25 FR 1583 (February 24, 1960) Executive Order 10450, 18 FR 2489 (April 27, 1954), and Executive Order 12968, 60 FR 40245 (August 2, 1995).

5. In § 10.2, paragraph (d) is revised to read as follows:

§ 10.2 Scope.

* * * * *

(d) Any other person designated by the Deputy Executive Director for Management Services of the Nuclear Regulatory Commission.

6. In § 10.5, the introductory text is removed, the paragraph designations preceding each of the defined terms are removed, the definitions are rearranged in alphabetical order, and the definitions of *Access Authorization, Employment Clearance, National Security Information, are revised and the definition of NRC Personnel Security Review Panel* is added to read as follows:

§ 10.5 Definitions.

Access authorization means an administrative determination that an individual (including a consultant) who is employed by or an applicant for employment with the NRC, NRC contractors, agents, and licensees of the NRC, or other person designated by the Deputy Executive Director for Management Services, is eligible for a security clearance for access to Restricted Data or National Security Information.

* * * * *

Employment Clearance means an administrative determination that an individual (including a consultant) who is an NRC employee or applicant for NRC employment and other persons designated by the Deputy Executive Director for Management Services of the NRC is eligible for employment or continued employment pursuant to subsection 145(b) of the Atomic Energy Act of 1954, as amended.

* * * * *

National Security Information means information that has been determined pursuant to Executive Order 12958 or any predecessor order to require protection against unauthorized disclosure and that is so designated.

* * * * *

NRC Personnel Security Review Panel means an appeal panel appointed by the Deputy Executive Director for Management Services and consisting of three members, two of whom shall be selected from outside the security field. One member of the Panel shall be designated as Chairman.

* * * * *

7. In § 10.10 the introductory text of paragraph (d) is revised to read as follows:

§ 10.10 Application of the criteria.

* * * * *

(d) In resolving a question concerning the eligibility or continued eligibility of an individual for access authorization and/or employment clearance, the

following principles shall be applied by the Director, Division of Facilities and Security, Hearing Examiners, and the NRC Personnel Security Review Panel:

* * * * *

8. In § 10.12, paragraphs (a) and (c) are revised to read as follows:

§ 10.12 Interview and other investigation.

(a) The Director, Division of Facilities and Security, Office of Administration, may authorize the granting of access authorization and/or employment clearance on the basis of the information in the possession of the NRC or may authorize an interview with the individual, if the individual consents to be interviewed, or other investigation as the Director deems appropriate. On the basis of this interview and/or an investigation, the Director may authorize the granting of access authorization and/or employment clearance.

* * * * *

(c) If the Director, Division of Facilities and Security, cannot make a favorable finding regarding the eligibility of an individual for access authorization and/or employment clearance, the question of the individual's eligibility must be resolved in accordance with the procedures set forth in § 10.20 *et seq.*

9. Section 10.20 is revised to read as follows:

§ 10.20 Purpose of the procedures.

These procedures establish methods for the conduct of hearings and administrative review of questions concerning an individual's eligibility for an access authorization and/or an employment clearance pursuant to the Atomic Energy Act of 1954, as amended, and Executive Orders 10450, 10865, and 12968 when a resolution favorable to the individual cannot be made on the basis of the interview or other investigation.

10. Section 10.21 is revised to read as follows:

§ 10.21 Suspension of access authorization and/or employment clearance.

In those cases where information is received which raises a question concerning the continued eligibility of an individual for an access authorization and/or an employment clearance, the Director, Division of Facilities and Security, through the Director, Office of Administration, shall forward to the Deputy Executive Director for Management Services or other Deputy Executive Director, his or her recommendation as to whether the individual's access authorization and/or employment clearance should be suspended pending the final determination resulting from the operation of the procedures provided in this part. In making this recommendation the Director, Division of Facilities and Security, shall consider factors such as the seriousness of the derogatory information developed, the degree of access of the individual to classified information, and the individual's opportunity by reason of his or her position to commit acts adversely affecting the national security. An individual's access authorization and/or employment clearance may not be suspended except by the direction of the Executive Director for Operations, Deputy Executive Director for Management Services or other Deputy Executive Director.

11. Section 10.22 is revised to read as follows:

§ 10.22 Notice to individual.

A notification letter, prepared by the Division of Facilities and Security, approved by the Office of the General Counsel, and signed by the Director, Office of Administration, must be presented to each individual whose eligibility for an access authorization and/or an employment clearance is in question. Where practicable, the letter will be presented to the individual in person. The letter will be accompanied by a copy of this part and must state:

(a) That reliable information in the possession of the NRC has created a substantial doubt concerning the individual's eligibility for an access authorization and/or an employment clearance;

(b) The information that creates a substantial doubt regarding the individual's eligibility for an access authorization and/or an employment clearance, that must be as comprehensive and detailed as the national security interests and other applicable law permit;

(c) That the individual has the right to be represented by counsel or other representative at their own expense;

(d) That the individual may request within 20 days of the date of the notification letter, any documents, records and reports which form the basis for the question of their eligibility for an access authorization and/or an employment clearance. The individual will be provided within 30 days all such documents, records and reports to the extent they are unclassified and do not reveal a confidential source. The individual may also request the entire investigative file, which will be promptly provided, as permitted by the national security interests and other applicable law;

(e) That unless the individual files with the Director, Office of Administration, a written request for a hearing within 20 days of the individual's receipt of the notification letter or 20 days after receipt of the information provided in response to a request made under paragraph (d) of this section, whichever is later, the Director, Division of Facilities and Security, through the Director, Office of Administration, will submit a recommendation as to the final action to the Deputy Executive Director for Management Services on the basis of the information in the possession of the NRC;

(f) That if the individual files a written request for a hearing with the Director, Office of Administration, the individual shall file with that request a written answer under oath or affirmation that admits or denies specifically each allegation and each supporting fact contained in the notification letter. A general denial is not sufficient to controvert a specific allegation. If the individual is without knowledge, he or she shall so state and that statement will operate as a denial. The answer must also state any additional facts and information that the individual desires to have considered in explanation or mitigation of allegations in the notification letter. Failure to specifically deny or explain or deny knowledge of any allegation or supporting fact will be deemed an admission that the allegation or fact is true.

(g) That if the individual does not want to exercise his or her right to a hearing, but does want to submit an answer to the allegations in the notification letter, the individual may do so by filing with the Director, Office of Administration, within 20 days of receipt of the notification letter or 20 days after receipt of the information provided in response to a request made under paragraph (d) of this section, whichever is later, a written answer in accordance with the requirements of paragraph (f) of this section;

(h) That the procedures in § 10.24 *et seq.* will apply to any hearing and review.

12. In § 10.23, paragraph (a) is revised to read as follows:

§ 10.23 Failure of individual to request a hearing.

(a) In the event the individual fails to file a timely written request for a hearing pursuant to § 10.22, a recommendation as to the final action to be taken will be made by the Director,

Division of Facilities and Security, through the Director, Office of Administration, to the Deputy Executive Director for Management Services on the basis of the information in the possession of the NRC, including any answer filed by the individual.

* * * * *

13. In § 10.25, paragraphs (a) and (c) are revised to read as follows:

§ 10.25 NRC Hearing Counsel.

(a) Hearing Counsel assigned pursuant to § 10.24 will, before the scheduling of the hearing, review the information in the case and will request the presence of witnesses and the production of documents and other physical evidence relied upon by the Director, Division of Facilities and Security, in making a finding that a question exists regarding the eligibility of the individual for an NRC access authorization and/or an employment clearance in accordance with the provisions of this part. When the presence of a witness and the production of documents and other physical evidence is deemed by the Hearing Counsel to be necessary or desirable for a determination of the issues, the Director, Division of Facilities and Security, will make arrangements for the production of evidence and for witnesses to appear at the hearing by subpoena or otherwise.

* * * * *

(c) The individual is responsible for producing witnesses in his or her own behalf and/or presenting other evidence before the Hearing Examiner to support the individual's answer and defense to the allegations contained in the notification letter. When requested by the individual, however, the Hearing Counsel may assist the individual to the extent practicable and necessary. The Hearing Counsel may at his or her discretion request the Director, Division of Facilities and Security, to arrange for the issuance of subpoenas for witnesses to attend the hearing in the individual's behalf, or for the production of specific documents or other physical evidence, provided a showing of the necessity for assistance has been made.

14. In § 10.27 paragraph (c) is revised to read as follows:

§ 10.27 Prehearing proceedings.

* * * * *

(c) The parties will be notified by the Hearing Examiner at least ten days in advance of the hearing of the time and place of the hearing. For good cause shown, the Hearing Examiner may order postponements or continuances from time to time. If, after due notice, the individual fails to appear at the hearing, or appears but is not prepared to proceed, the Hearing Examiner shall, unless good cause is shown, return the case to the Director, Division of Facilities and Security, who shall make a recommendation on final action to be taken, through the Director, Office of Administration, to the Deputy Executive Director for Management Services on the basis of the information in the possession of the NRC.

15. In § 10.28, paragraph (n) is revised to read as follows:

§ 10.28 Conduct of hearing.

* * * * *

(n) A written transcript of the entire proceeding must be made by a person possessing appropriate NRC access authorization and/or employment clearance and, except for portions containing Restricted Data or National Security Information, or other lawfully withholdable information, a copy of the transcript will be furnished the individual without cost. The transcript or recording will be made part of the applicant's or employee's personnel security file.

16. Section 10.31 is revised to read as follows:

§ 10.31 Actions on the recommendations.

(a) Upon receipt of the findings and recommendation from the Hearing Examiner, and the record, the Director, Office of Administration, shall forthwith transmit it to the Deputy Executive Director for Management Services who has the discretion to return the record to the Director, Office of Administration, for further proceedings by the Hearing Examiner with respect to specific matters designated by the Deputy Executive Director for Management Services.

(b)(1) In the event of a recommendation by the Hearing Examiner that an individual's access authorization and/or employment clearance be denied or revoked, the Deputy Executive Director for Management Services shall immediately notify the individual in writing of the Hearing Examiner's findings with respect to each allegation contained in the notification letter, and that the individual has a right to request a review of his or her case by the NRC Personnel Security Review Panel and of the right to submit a brief in support of his or her contentions. The request for a review must be submitted to the Deputy Executive Director for Management Services within five days after the receipt of the notice. The brief will be forwarded to the Deputy Executive Director for Management Services, for transmission to the NRC Personnel Security Review Panel not later than 10 days after receipt of the notice.

(2) In the event the individual fails to request a review by the NRC Personnel Security Review Panel of an adverse recommendation within the prescribed time, the Deputy Executive Director for Management Services may at his or her discretion request a review of the record of the case by the NRC Personnel Security Review Panel. The request will set forth those matters at issue in the hearing on which the Deputy Executive Director for Management Services desires a review by the NRC Personnel Security Review Panel.

(c) Where the Hearing Examiner has made a recommendation favorable to the individual, the Deputy Executive Director for Management Services may at his or her discretion request a review of the record of the case by the NRC Personnel Security Review Panel. If this request is made, the Deputy Executive Director for Management Services shall immediately cause the individual to be notified of that fact and of those matters at issue in the hearing on which the Deputy Executive Director for Management Services desires a review by the NRC Personnel Security Review Panel. The Deputy Executive Director for Management Services will further inform the individual that within 10 days of receipt of this notice, the individual may submit a brief concerning those matters at issue for the consideration of the NRC Personnel Security Review Panel. The brief must be forwarded to the Deputy Executive Director for Management Services for transmission to the NRC Personnel Security Review Panel.

(d) In the event of a request for a review pursuant to paragraphs (b) and (c) of this section, the Hearing Counsel may file a brief within 10 days of being notified by the Deputy Executive Director for Management Services that a review has been requested. The brief will be forwarded to the Deputy Executive Director for Management Services for transmission to the NRC Personnel Security Review Panel.

(e) The Hearing Counsel may also request a review of the case by the NRC Personnel Security Review Panel. The request for review, which will set forth those matters at issue in the hearing on which the Hearing Counsel desires a review, will be submitted to the Deputy Director Executive for Management Services within five days after receipt of the Hearing Examiner's findings and recommendation. Within 10 days of the request for review, the Hearing Counsel may file a brief which will be forwarded to the Deputy Executive Director for Management Services for transmission

to the NRC Personnel Security Review Panel. A copy of the request for review, and a copy of any brief filed, will be immediately sent to the individual. If the Hearing Counsel's request is for a review of a recommendation favorable to the individual, the individual may, within 10 days of receipt of a copy of the request for review, submit a brief concerning those matters at issue for consideration of the NRC Personnel Security Review Panel. The brief will be forwarded to the Deputy Executive Director for Management Services for transmission to the NRC Personnel Security Review Panel and Hearing Counsel. A copy of the brief will be made a part of the applicant's personnel security file.

(f) The time limits imposed by this section for requesting reviews and the filing of briefs may be extended by the Deputy Executive Director for Management Services for good cause shown.

(g) In the event a request is made for a review of the record by the NRC Personnel Security Review Panel, the Deputy Executive Director for Management Services shall send the record, with all findings and recommendations and any briefs filed by the individual and the Hearing Counsel, to the NRC Personnel Security Review Panel. If neither the individual, the Deputy Executive Director for Management Services, nor the Hearing Counsel requests a review, the final determination will be made by the Deputy Executive Director for Management Services on the basis of the record with all findings and recommendations.

17. Section 10.32 is revised to read as follows:

§ 10.32 Recommendation of the NRC Personnel Security Review Panel.

(a) The Deputy Executive Director for Management Services shall designate an NRC Personnel Security Review Panel to conduct a review of the record of the case. The NRC Personnel Security Review Panel shall be comprised of three members, two of whom shall be selected from outside the security field. To qualify as an NRC Personnel Security Review Panel member, the person designated shall have an NRC ''Q'' access authorization and may be an employee of the NRC, its contractors, agents, or licensees. However, no employee or consultant of the NRC shall serve as an NRC Personnel Security Review Panel member reviewing the case of an employee (including a consultant) or applicant for employment with the NRC; nor shall any employee or consultant of an NRC contractor, agent or licensee serve as an NRC Personnel Security Review Panel member reviewing the case of an employee (including a consultant) or an applicant for employment of that contractor, agent, or licensee. No NRC Personnel Security Review Panel member shall be selected who has knowledge of the case or of any information relevant to the disposition of it, or who for any reason would be unable to issue a fair and unbiased recommendation.

(b) The NRC Personnel Security Review Panel shall consider the matter under review based upon the record supplemented by any brief submitted by the individual or the Hearing Counsel. The NRC Personnel Security Review Panel may request additional briefs as the Panel deems appropriate. When the NRC Personnel Security Review Panel determines that additional evidence or further proceedings are necessary, the record may be returned to the Deputy Executive Director for Management Services with a recommendation that the case be returned to the Director, Office of Administration, for appropriate action, which may include returning the case to the Hearing Examiner and reconvening the hearing to obtain additional testimony. When additional testimony is taken by the Hearing Examiner, a written transcript of the testimony will be made a part of the record and will be taken by a person possessing an appropriate NRC access authorization and/or employment clearance and, except for portions containing Restricted Data or National Security Information, or other lawfully withholdable information, a copy of the transcript will be furnished the individual without cost.

(c) In conducting the review, the NRC Personnel Security Review Panel shall make its findings and recommendations as to the eligibility or continued eligibility of an individual for an access authorization and/or an employment clearance on the record supplemented by additional testimony or briefs, as has been previously determined by the NRC Personnel Security Review Panel as appropriate.

(d) The NRC Personnel Security Review Panel shall not consider the possible impact of the loss of the individual's services upon the NRC program.

(e) If, after considering all the factors in light of the criteria set forth in this part, the NRC Personnel Security Review Panel is of the opinion that granting or continuing an access authorization and/or an employment clearance to the individual will not endanger the common defense and security and will be clearly consistent with the national interest, the NRC Personnel Security Review Panel shall make a favorable recommendation; otherwise, the NRC Personnel Security Review Panel shall make an adverse recommendation. The NRC Personnel Security Review Panel shall prepare a report of its findings and recommendations and submit the report in writing to the Deputy Executive Director for Management Services, who shall furnish a copy to the individual. The findings and recommendations must be fully supported by stated reasons.

18. Section 10.33 is revised to read as follows:

§ 10.33 Action by the Deputy Executive Director for Management Services.

(a) The Deputy Executive Director for Management Services, on the basis of the record accompanied by all findings and recommendations, shall make a final determination whether access authorization and/or employment clearance shall be granted, denied, or revoked, except when the provisions of § 10.28 (i), (j), or (l) have been used and the Deputy Executive Director for Management Services determination is adverse, the Commission shall make the final agency determination.

(b) In making the determination as to whether an access authorization and/or an employment clearance shall be granted, denied, or revoked, the Deputy Executive Director for Management Services or the Commission shall give due recognition to the favorable as well as the unfavorable information concerning the individual and shall take into account the value of the individual's services to the NRC's program and the consequences of denying or revoking access authorization and/or employment clearance.

(c) In the event of an adverse determination, the Deputy Executive Director for Management Services shall promptly notify the individual through the Director, Office of Administration, of his or her decision that an access authorization and/or an employment clearance is being denied or revoked and of his or her findings with respect to each allegation contained in the notification letter for transmittal to the individual.

(d) In the event of a favorable determination, the Deputy Executive Director for Management Services shall promptly notify the individual through the Director, Office of Administration.

19. In § 10.34, paragraph (a) is revised to read as follows:

§ 10.34 Action by the Commission.

(a) Whenever, under the provisions of § 10.28(i), (j), or (l) an individual has not been afforded an opportunity to confront and cross-examine witnesses who have furnished information adverse to the individual and an adverse recommendation has been made by the Deputy Executive Director for Management Services, the Commission shall review the record and determine whether an access authorization and/or an employment clearance should be granted, denied, or revoked, based upon the record.

* * * * *

20. Section 10.35 is revised to read as follows:

§ 10.35 Reconsideration of cases.

(a) Where, pursuant to the procedures set forth in §§ 10.20 through 10.34, the Deputy Executive Director for Management Services or the Commission has made a determination granting an access authorization and/or an employment clearance to an individual, the individual's eligibility for an access authorization and/or an employment clearance will be reconsidered only when subsequent to the time of that determination, new derogatory information has been received or the scope or sensitivity of the Restricted Data or National Security Information to which the individual has or will have access has significantly increased. All new derogatory information, whether resulting from the NRC's reinvestigation program or other sources, will be evaluated relative to an individual's continued eligibility in accordance with the procedures of this part.

(b) Where, pursuant to these procedures, the Commission or Deputy Executive Director for Management Services has made a determination denying or revoking an access authorization and/or an employment clearance to an individual, the individual's eligibility for an access authorization and/or an employment clearance may be reconsidered when there is a bona fide offer of employment and/or a bona fide need for access to Restricted Data or National Security Information and either material and relevant new evidence is presented, which the individual and his or her representatives are without fault in failing to present before, or there is convincing evidence of reformation or rehabilitation. Requests for reconsideration must be submitted in writing to the Deputy Executive Director for Management Services through the Director, Office of Administration. Requests must be accompanied by an affidavit setting forth in detail the information referred to above. The Deputy Executive Director for Management Services shall cause the individual to be notified as to whether his or her eligibility for an access authorization and/or an employment clearance will be reconsidered and if so, the method by which a reconsideration will be accomplished.

(c) Where an access authorization and/or an employment clearance has been granted to an individual by the Director, Division of Facilities and Security, without recourse to the procedures set forth in §§ 10.20 through 10.34, the individual's eligibility for an access authorization and/or an employment clearance will be reconsidered only in a case where, subsequent to the granting of the access authorization and/or employment clearance, new derogatory information has been received or the scope or sensitivity of the Restricted Data or National Security Information to which the individual has or will have access has significantly increased. All new derogatory information, whether resulting from the NRC's reinvestigation program or other sources, will be evaluated relative to an individual's continued eligibility in accordance with the procedures of this part.

PART 11—CRITERIA AND PROCEDURES FOR DETERMINING ELIGIBILITY FOR ACCESS TO OR CONTROL OVER SPECIAL NUCLEAR MATERIAL

21. The authority citation for part 11 continues to read as follows:

Authority: Sec. 161, 68 Stat. 948, as amended (42 U.S.C. 2201); sec. 201, 88 Stat. 1242, as amended (42 U.S.C. 5841).

Section 11.15(e) also issued under sec. 501, 85 Stat. 290 (31 U.S.C. 483a).

22. Section 11.3(a) is revised to read as follows:

§ 11.3 Scope.

(a) The requirements, criteria, and procedures of this part apply to the establishment of and eligibility for special nuclear material access authorization for employees, contractors, consultants of, and applicants for employment with licensees or contractors of the Nuclear Regulatory Commission. This employment, contract, service, or consultation may involve any duties or assignments within the criteria of § 11.11 or § 11.13 requiring access to, or control over, formula quantities of special nuclear material (as defined in part 73 of this chapter).

* * * * *

23. In § 11.7 the paragraph designations are removed, the definitions are rearranged in alphabetical order, and the definitions of *NRC–''U'' special nuclear material access authorization* and *NRC–''R'' special nuclear material access authorization* are revised to read as follows:

§ 11.7 Definitions.

* * * * *

NRC–''U'' special nuclear material access authorization means an administrative determination based upon a single scope background investigation, normally conducted by the Office of Personnel Management, that an individual in the course of employment is eligible to work at a job falling within the criterion of 11.11(a)(1) or 11.13.

NRC–''R'' special nuclear material access authorization means an administrative determination based upon a national agency check with law and credit investigation that an individual in the course of employment is eligible to work at a job falling within the criterion of § 11.11(a)(2).

* * * * *

24. Section 11.15 is revised to read as follows:

§ 11.15 Application for special nuclear material access authorization.

(a)(1) Application for special nuclear material access authorization, renewal, or change in level must be filed by the licensee on behalf of the applicant with the Director, Division of Facilities and Security, U.S. Nuclear Regulatory Commission, Washington, DC 20555. Applications for affected individuals employed on October 28, 1985, shall be submitted within 60 days of notification of Commission approval of the amended security plan.

(2) Licensees who wish to secure NRC–U or NRC–R special nuclear material access authorizations for individuals in possession of an active NRC Q or L access authorization or other security clearance granted by another Federal agency based on an equivalent investigation shall submit a ''Security Acknowledgment'' (NRC Form 176) and a ''Request for Access Authorization'' (NRC Form 237). NRC will process these requests by verifying the data on an NRC-cleared individual, or by contacting the Federal agency that granted the clearance, requesting certification of the security clearance, and determining the investigative basis and level of the clearance. Licensees may directly request the Federal agency that administered the security clearance, if other than NRC, to certify to the NRC

that it has on file an active security clearance for an individual and to specify the investigative basis and level of the clearance.

(b) Applications for special nuclear material access authorization for individuals, other than those qualifying under the provisions of § 11.15(a)(2), must be made on forms supplied by the Commission, including:

(1) Questionnaire for National Security Positions (SF–86, Parts 1 and 2);

(2) Two completed standard fingerprint cards (FD–258);

(3) Security Acknowledgment (NRC Form 176);

(4) Other related forms where specified in accompanying instruction (NRC–254); and

(5) A statement by the employer, prospective employer, or contractor identifying the job to be assigned to or assumed by the individual and the level of authorization needed, justified by appropriate reference to the licensee's security plan.

(c)(1) Except as provided in paragraph (c)(2) of this section, NRC–U special nuclear material access authorizations must be renewed every five years from the date of issuance. Except as provided in paragraph (c)(3) of this section, NRC–R special nuclear material access authorizations must be renewed every ten years from the date of issuance. An application for renewal must be submitted at least 120 days before the expiration of the five-year period for NRC–U and ten-year period for NRC–R, respectively, and must include:

(i) A statement by the licensee that at the time of application for renewal the individual's assigned or assumed job requires an NRC–U or an NRC–R special nuclear material access authorization, justified by appropriate reference to the licensee's security plan;

(ii) The Questionnaire for National Security Positions (SF–86, Parts 1 and 2);

(iii) Two completed standard fingerprint cards (FD–258); and

(iv) Other related forms specified in accompanying NRC instructions (NRC Form 254).

(2) An exception to the time for submission of NRC–U special nuclear material access authorization renewal applications and the paperwork required is provided for individuals who have a current and active DOE–Q access authorization and are subject to DOE Reinvestigation Program requirements. For these individuals, the submission to DOE of the SF–86 pursuant to DOE Reinvestigation Program requirements (generally every five years) will satisfy the NRC renewal submission and paperwork requirements even if less than five years has passed since the date of issuance or renewal of the NRC–U access authorization. Any NRC–U special nuclear material access authorization renewed in response to provisions of this paragraph will not be due for renewal until the date set by DOE for the next reinvestigation of the individual pursuant to DOE's Reinvestigation Program.

(3) An exception to the time for submission of NRC–R special nuclear material access authorization renewal applications and the paperwork required is provided for individuals who have a current and active DOE–L or DOE–Q access authorization and are subject to DOE Reinvestigation Program requirements. For these individuals, the submission to DOE of the SF–86 pursuant to DOE Reinvestigation Program requirements will satisfy the NRC renewal submission and paperwork requirements even if less than ten years have passed since the date of issuance or renewal of the NRC–R access authorization. Any NRC–R special nuclear material access authorization renewed pursuant to this paragraph will not be due for renewal until the date set by DOE for the next reinvestigation of the individual pursuant to DOE's Reinvestigation Program.

(4) Notwithstanding the provisions of paragraph (c)(2) of this section, the period of time for the initial and each subsequent NRC–U renewal application to NRC may not exceed seven years.

(5) Notwithstanding the provisions of paragraph (c)(3) of this section, the period of time for the initial and each subsequent NRC–R renewal application to NRC may not exceed twelve years. Any individual who is subject to the DOE Reinvestigation Program requirements but, for administrative or other reasons, does not submit reinvestigation forms to DOE within seven years of the previous submission, for a NRC–U renewal or twelve years of the previous submission for a NRC–R renewal, shall submit a renewal application to NRC using the forms prescribed in paragraph (c)(1) of this section before the expiration of the seven year period for NRC–U or twelve year period for NRC–R renewal.

(d) If at any time, due to new assignment or assumption of duties, a change in a special nuclear material access authorization level from NRC ''R'' to ''U'' is required, the individual shall apply for a change of level of special nuclear material access authorization. The application must include a description of the new duties to be assigned or assumed, justified by appropriate reference to the licensee's security plan.

(e)(1) Each application for a special nuclear material access authorization, renewal, or change in level must be accompanied by the licensee's remittance, payable to the U.S. Nuclear Regulatory Commission, according to the following schedule:

i. NRC–R	[1]$130
ii. NRC–R (expedited processing)	[1]203
iii. NRC–R based on certification of comparable investigation	[2]0
iv. NRC–R renewal	[1]130
v. NRC–U requiring single scope investigation.	2856
vi. NRC–U requiring single scope investigation (expedited processing)	3295
vii. NRC–U based on certification of comparable investigation	[2]0
viii. NRC–U renewal	[2]1705

[1] If the NRC determines, based on its review of available data, that a National Agency Check with law and credit investigation is necessary, a fee of $130 will be assessed prior to the conduct of the investigation; however, if a single scope investigation is deemed necessary by the NRC, based on its review of available data, a fee of $2,856 will be assessed prior to the conduct of the investigation.

[2] If the NRC determines, based on its review of available data, that a single scope investigation is necessary, a fee of $2,856 will be assessed prior to the conduct of the investigation.

(2) Material access authorization fees will be published each time the Office of Personnel Management notifies NRC of a change in the background investigation rate it charges NRC for conducting the investigation. Any changed access authorization fees will be applicable to each access authorization request received upon or after the date of publication. Applications from individuals having current Federal access authorizations

may be processed expeditiously at no cost because the Commission may accept the certification of access authorizations and investigative data from other Federal government agencies that grant personnel access authorizations.

(f)(1) Any Federal employee, employee of a contractor of a Federal agency, licensee, or other person visiting an affected facility for the purpose of conducting official business, who possesses an active NRC or DOE–Q access authorization or an equivalent Federal security clearance granted by another Federal agency (''Top Secret'') based on a comparable single scope background investigation may be permitted, in accordance with § 11.11, the same level of unescorted access that an NRC–U special nuclear material access authorization would afford.

(2) Any Federal employee, employee of a contractor of a Federal agency, licensee, or other person visiting an affected facility for the purpose of conducting official business, who possesses an active NRC or DOE–L access authorization or an equivalent security clearance granted by another Federal agency (''Secret'') based on a comparable or greater background investigation consisting of a national agency check with law and credit may be permitted, in accordance with § 11.11, the same level of unescorted access that an NRC–R special nuclear material access authorization would afford. An NRC or DOE–L access authorization or an equivalent security clearance (''Secret''), based on a background investigation or national agency check with credit granted or being processed by another Federal agency before January 1, 1998, is acceptable to meet this requirement.

25. Section 11.16 is revised to read as follows:

§ 11.16 Cancellation of request for special nuclear material access authorization.

When a request for an individual's access authorization is withdrawn or canceled, the licensee shall notify the Chief, Personnel Security Branch, NRC Division of Facilities and Security immediately, by telephone, so that the investigation may be discontinued. The caller shall provide the full name and date of birth of the individual, the date of request, and the type of access authorization originally requested (''U'' or ''R''). The licensee shall promptly submit written confirmation of the telephone notification to the Personnel Security Branch, NRC Division of Facilities and Security. A portion of the fee for the ''U'' special nuclear material access authorization may be refunded depending upon the status of the single scope investigation at the time of withdrawal or cancellation.

26. In § 11.21, paragraphs (c) and (d) are revised to read as follows:

§ 11.21 Application of the criteria.

* * * * *

(c) When the reports of an investigation of an individual contain information reasonably falling within one or more of the classes of derogatory information listed in § 10.11, it creates a question as to the individual's eligibility for special nuclear material access authorization. In these cases, the application of the criteria must be made in light of and with specific regard to whether the existence of the information supports a reasonable belief that the granting of a special nuclear material access authorization would be inimical to the common defense and security. The Director, Division of Facilities and Security, may authorize the granting of a special nuclear material access authorization on the basis of the information in the case or may authorize the conduct of an interview with the individual and, on the basis of the interview and other investigation as the Director deems appropriate, may authorize the granting of a special nuclear material access authorization. Otherwise, a question concerning the eligibility of an individual for a special nuclear material access authorization must be resolved in accordance with the procedures set forth in §§ 10.20 through 10.38 of this chapter.

(d) In resolving a question concerning the eligibility or continued eligibility of an individual for a special nuclear material access authorization by action of the Hearing Examiner or a Personnel Security Review Panel,[3] the following principle shall be applied by the Examiner and the Personnel Security Review Panel: Where there are sufficient grounds to establish a reasonable belief as to the truth of the information regarded as substantially derogatory and when the existence of this information supports a reasonable belief that granting access would be inimical to the common defense and security, this will be the basis for a recommendation for denying or revoking special nuclear material access authorization if not satisfactorily rebutted by the individual or shown to be mitigated by circumstance.

[3] The functions of the Hearing Examiner and the Personnel Security Review Panel are described in part 10 of this chapter.

PART 25—ACCESS AUTHORIZATION FOR LICENSEE PERSONNEL

27. The authority citation for Part 25 continues to read as follows:

Authority: Secs. 145, 161, 68 Stat. 942, 948, as amended (42 U.S.C. 2165, 2201); sec. 201, 88 Stat. 1242, as amended (42 U.S.C. 5841); E.O. 10865, as amended, 3 CFR 1959–1963 Comp., p. 398 (50 U.S.C. 401, note); E.O. 12829, 3 CFR, 1993 Comp. p. 570; E.O. 12958, 3 CFR, 1995 Comp., p .333; E.O. 12968, 3 CFR, 1995 Comp., p .396. Appendix A also issued under 96 Stat. 1051 (31 U.S.C. 9701).

28. In § 25.5 the definitions of *''L'' access authorization, National Security Information, and ''Q'' access authorization are revised to read as follows:*

§ 25.5 Definitions.

* * * * *

''L'' access authorization means an access authorization granted by the Commission that is normally based on a national agency check with a law and credit investigation (NACLC) or an access national agency check and inquiries investigation (ANACI) conducted by the Office of Personnel Management.

* * * * *

National Security Information means information that has been determined pursuant to Executive Order 12958 or any predecessor order to require protection against unauthorized disclosure and that is so designated.

* * * * *

''Q'' access authorization means an access authorization granted by the Commission normally based on a single scope background investigation conducted by the Office of Personnel Management, the Federal Bureau of Investigation, or other U.S. Government agency which conducts personnel security investigations.

* * * * *

29. Section 25.9 is revised to read as follows:

§ 25.9 Communications.

Except where otherwise specified, all communications and reports concerning the regulations in this part should be addressed to the Director, Division of Facilities and Security, U.S. Nuclear Regulatory Commission, Washington, DC 20555.

30. Section 25.11 is revised to read as follows:

§ 25.11 Specific exemptions.

The NRC may, upon application by any interested person or upon its own initiative, grant exemptions from the requirements of the regulations of this part, that are—

(a) Authorized by law, will not present an undue risk to the public health and safety, and are consistent with the common defense and security; or

(b) Coincidental with one or more of the following:

(1) An application of the regulation in the particular circumstances conflicts with other NRC rules or requirements;

(2) An application of the regulation in the particular circumstances would not serve the underlying purpose of the rule or is not necessary to achieve the underlying purpose of the rule;

(3) When compliance would result in undue hardship or other costs that significantly exceed those contemplated when the regulation was adopted, or that significantly exceed those incurred by others similarly situated;

(4) When the exemption would result in benefit to the common defense and security that compensates for any decrease in the security that may result from the grant of the exemption;

(5) When the exemption would provide only temporary relief from the applicable regulation and the licensee or applicant has made good faith efforts to comply with the regulation;

(6) When there is any other material circumstance present that was not considered when the regulation was adopted that would be in the public interest to grant an exemption. If this condition is relied on exclusively for satisfying paragraph (b) of this section, the exemption may not be granted until the Executive Director for Operations has consulted with the Commission.

31. Section 25.19 is revised to read as follows:

§ 25.19 Processing applications.

Each application for an access authorization or access authorization renewal must be submitted to the CSA. If the NRC is the CSA, the application and its accompanying fee must be submitted to the NRC Division of Facilities and Security. If necessary, the NRC Division of Facilities and Security may obtain approval from the appropriate Commission office exercising licensing or regulatory authority before processing the access authorization or access authorization renewal request. If the applicant is disapproved for processing, the NRC Division of Facilities and Security shall notify the submitter in writing and return the original application (security packet) and its accompanying fee.

32. In § 25.21, paragraph (c) is revised to read as follows:

§ 25.21 Determination of initial and continued eligibility for access authorization.

* * * * *

(c)(1) Except as provided in paragraph (c)(2) of this section, an NRC ''Q'' access authorization must be renewed every five years from the date of issuance. Except as provided in paragraph (c)(2) of this section, an NRC ''L'' access authorization must be renewed every ten years from the date of issuance. An application for renewal must be submitted at least 120 days before the expiration of the five-year period for a ''Q'' access authorization and the ten-year period for an ''L'' access authorization, and must include:

(i) A statement by the licensee or other person that the individual continues to require access to classified National Security Information or Restricted Data; and

(ii) A personnel security packet as described in § 25.17(d).

(2) Renewal applications and the required paperwork are not required for individuals who have a current and active access authorization from another Federal agency and who are subject to a reinvestigation program by that agency that is determined by the NRC to meet the NRC's requirements. (The DOE Reinvestigation Program has been determined to meet the NRC's requirements.) For these individuals, the submission of the SF–86 by the licensee or other person to the other Government agency pursuant to their reinvestigation requirements will satisfy the NRC's renewal submission and paperwork requirements, even if less than five years have passed since the date of issuance or renewal of the NRC ''Q'' access authorization, or if less than 10 years have passed since the date of issuance or renewal of the NRC ''L'' access authorization. Any NRC access authorization continued in response to the provisions of this paragraph will, thereafter, not be due for renewal until the date set by the other Government agency for the next reinvestigation of the individual pursuant to the other agency's reinvestigation program. However, the period of time for the initial and each subsequent NRC ''Q'' renewal application to the NRC may not exceed seven years or, in the case of an NRC ''L'' renewal application, twelve years. Any individual who is subject to the reinvestigation program requirements of another Federal agency but, for administrative or other reasons, does not submit reinvestigation forms to that agency within seven years for a ''Q'' renewal or twelve years for an ''L'' renewal of the previous submission, shall submit a renewal application to the NRC using the forms prescribed in § 25.17(d) before the expiration of the seven-year period for a ''Q'' renewal or twelve-year period for an ''L'' renewal.

(3) If the NRC is not the CSA, reinvestigation program procedures and requirements will be set by the CSA.

33. In § 25.23, paragraph (a) is revised to read as follows:

§ 25.23 Notification of grant of access authorization.

* * * * *

(a) In those cases when the determination was made as a result of a Personnel Security Hearing or by a Personnel Security Review Panel ; or

* * * * *

34. Section 25.25 is revised to read as follows:

§ 25.25 Cancellation of requests for access authorization.

When a request for an individual's access authorization or renewal of an access authorization is withdrawn or canceled, the requestor shall notify the CSA immediately by telephone so that the single scope background investigation, national agency check with law and credit investigation, or other personnel security action may be discontinued. The requestor shall identify the full name and date of birth of the individual, the date of request, and the type of access authorization or access authorization renewal requested. The requestor shall confirm each telephone notification promptly in writing.

35. In § 25.27, paragraph (b) is revised to read as follows:

§ 25.27 Reopening of cases in which requests for access authorizations are canceled.

* * * * *

(b) Additionally, if 90 days or more have elapsed since the date of the last Questionnaire for National Security Positions (SF–86), or CSA equivalent, the individual must complete a personnel security packet (see § 25.17(d)). The CSA, based on investigative or other needs, may require a complete personnel security packet in other cases as well. A fee, equal to the amount paid for an initial request, will be charged only if a new or updating investigation by the NRC is required.

36. In § 25.31, paragraphs (a), (b), and (c) are revised to read as follows:

§ 25.31 Extensions and transfers of access authorizations.

(a) The NRC Division of Facilities and Security may, on request, extend the authorization of an individual who possesses an access authorization in

connection with a particular employer or activity to permit access to classified information in connection with an assignment with another employer or activity.

(b) The NRC Division of Facilities and Security may, on request, transfer an access authorization when an individual's access authorization under one employer or activity is terminated, simultaneously with the individual being granted an access authorization for another employer or activity.

(c) Requests for an extension or transfer of an access authorization must state the full name of the person, date of birth, and level of access authorization. The Director, Division of Facilities and Security, may require a new personnel security packet (see § 25.17(c)) to be completed by the applicant. A fee, equal to the amount paid for an initial request, will be charged only if a new or updating investigation by the NRC is required.

* * * * *

37. In § 25.33, paragraphs (a) and (b) are revised to read as follows:

§ 25.33 Termination of access authorizations.

(a) Access authorizations will be terminated when:

(1) An access authorization is no longer required;

(2) An individual is separated from the employment or the activity for which he or she obtained an access authorization for a period of 90 days or more; or

(3) An individual, pursuant to 10 CFR part 10 or other CSA-approved adjudicatory standards, is no longer eligible for an access authorization.

(b) A representative of the licensee or other organization that employs the individual whose access authorization will be terminated shall immediately notify the CSA when the circumstances noted in paragraph (a)(1) or (a)(2) of this section exist; inform the individual that his or her access authorization is being terminated, and the reason; and that he or she will be considered for reinstatement of an access authorization if he or she resumes work requiring the authorization.

* * * * *

38. In § 25.35, paragraph (b) is revised to read as follows:

§ 25.35 Classified visits.

* * * * *

(b) Representatives of the Federal Government, when acting in their official capacities as inspectors, investigators, or auditors, may visit a licensee, certificate holder, or other facility without furnishing advanced notification, provided these representatives present appropriate Government credentials upon arrival. Normally, however, Federal representatives will provide advance notification in the form of an NRC Form 277, ''Request for Visit or Access Approval,'' with the ''need-to-know'' certified by the appropriate NRC office exercising licensing or regulatory authority and verification of an NRC access authorization by the Division of Facilities and Security.

* * * * *

39. In § 25.37, paragraph (b) is revised to read as follows:

§ 25.37 Violations.

* * * * *

(b) National Security Information is protected under the requirements and sanctions of Executive Order 12958.

40. Appendix A to Part 25 is revised to read as follows:

APPENDIX A TO PART 25—FEES FOR NRC ACCESS AUTHORIZATION

Category	Fee
Initial ''L'' access authorization	[1] $130
Initial ''L'' access authorization (expedited processing)	[1] 203
Reinstatement of ''L'' access authorization	[2] 130
Extension or Transfer of ''L'' access authorization	[2] 130
Renewal of ''L'' access authorization	[1] 130
Initial ''Q'' access authorization	2856
Initial ''Q'' access authorization (expedited processing)	3295
Reinstatement of ''Q'' access authorization	[2] 2856
Reinstatement of ''Q'' access authorization (expedited processing)	[2] 3295
Extension or Transfer of ''Q''	[2] 2856
Extension or Transfer of ''Q'' (expedited processing)	[2] 3295
Renewal of ''Q'' access authorization	[2] 1705

[1] If the NRC determines, based on its review of available data, that a single scope investigation is necessary, a fee of $2856 will be assessed before the conduct of the investigation.

[2] Full fee will only be charged if an investigation is required.

41. The heading of Part 95 is revised to read as follows:

PART 95—FACILITY SECURITY CLEARANCE AND SAFEGUARDING OF NATIONAL SECURITY INFORMATION AND RESTRICTED DATA

42. The authority citation for part 95 continues to read as follows:

Authority: Secs. 145, 161, 193, 68 Stat. 942, 948, as amended (42 U.S.C. 2165, 2201); sec. 201, 88 Stat. 1242, as amended (42 U.S.C. 5841); E.O. 10865, as amended, 3 CFR 1959–1963 Comp., p. 398 (50 U.S.C. 401, note); E.O. 12829, 3 CFR 1993 Comp., p. 570; E.O. 12958, as amended, 3 CFR 1995 Comp., p. 333; E.O. 12968, 3 CFR 1995 Comp., p. 391.

43. In § 95.5 the definitions of *NRC ''L'' access authorization, NRC ''Q'' access authorization,* and *Security container* are revised to read as follows:

§ 95.5 Definitions.

* * * * *

NRC ''L'' access authorization means an access authorization granted by the Commission normally based on a national agency check with law and credit investigation (NACLC) or an access national agency check and inquiries investigation (ANACI)) conducted by the Office of Personnel Management.

NRC ''Q'' access authorization means an access authorization granted by the Commission normally based on a single scope background investigation conducted by the Office of Personnel Management, the Federal Bureau of Investigation, or other U.S. Government agency that conducts personnel security investigations.

* * * * *

Security container includes any of the following repositories:

(1) A security filing cabinet—one that bears a Test Certification Label on the side of the locking drawer, inside wall adjacent to the locking drawer, or interior door plate, or is marked,

''General Services Administration Approved Security Container'' on the exterior of the top drawer or door.

(2) A safe—burglar-resistive cabinet or chest which bears a label of the Underwriters' Laboratories, Inc. certifying the unit to be a TL–15, TL–30, or TRTL–30, and has a body fabricated of not less than 1 inch of steel and a door fabricated of not less than 1½ inches of steel exclusive of the combination lock and bolt work; or bears a Test Certification Label on the inside of the door, or is marked ''General Services Administration Approved Security Container'' and has a body of steel at least ½″ thick, and a combination locked steel door at least 1″ thick, exclusive of bolt work and locking devices; and an automatic unit locking mechanism.

(3) A vault—a windowless enclosure constructed with walls, floor, roof, and door(s) that will delay penetration sufficient to enable the arrival of emergency response forces capable of preventing theft, diversion, damage, or compromise of classified information or matter, when delay time is assessed in conjunction with detection and communication subsystems of the physical protection system.

(4) A vault-type room—a room that has a combination lock door and is protected by an intrusion alarm system that alarms upon the unauthorized penetration of a person anywhere into the room.

(5) Other repositories that would provide comparable physical protection in the judgment of the Division of Facilities and Security.

* * * * *

44. In § 95.8, paragraph (b) is revised to read as follows:

§ 95.8 Information collection requirements: OMB approval.

* * * * *

(b) The approved information collection requirements contained in this part appear in §§ 95.11, 95.15, 95.17, 95.18, 95.21, 95.25, 95.33, 95.34, 95.36, 95.37, 95.39, 95.41, 95.43, 95.45, 95.47, 95.53, and 95.57.

45. Section 95.9 is revised to read as follows:

§ 95.9 Communications.

Except where otherwise specified, all communications and reports concerning the regulations in this part should be addressed to the Director, Division of Facilities and Security, Nuclear Regulatory Commission, Washington, DC 20555.

46. Section 95.11 is revised to read as follows:

§ 95.11 Specific exemptions.

The NRC may, upon application by any interested person or upon its own initiative, grant exemptions from the requirements of the regulations of this part, that are—

(a) Authorized by law, will not present an undue risk to the public health and safety, and are consistent with the common defense and security; or

(b) Coincidental with one or more of the following:

(1) An application of the regulation in the particular circumstances conflicts with other rules or requirements of the NRC;

(2) An application of the regulation in the particular circumstances would not serve the underlying purpose of the rule or is not necessary to achieve the underlying purpose of the rule;

(3) When compliance would result in undue hardship or other costs that are significantly in excess of those contemplated when the regulation was adopted, or that are significantly in excess of those incurred by others similarly situated;

(4) When the exemption would result in benefit to the common defense and security that compensates for any decrease in security that may result from the grant of the exemption;

(5) When the exemption would provide only temporary relief from the applicable regulation and the licensee or applicant has made good faith efforts to comply with the regulation;

(6) When there is any other material circumstance not considered when the regulation was adopted for which it would be in the public interest to grant an exemption. If such a condition is relied on exclusively for satisfying paragraph (b) of this section, the exemption may not be granted until the Executive Director for Operations has consulted with the Commission.

47. In § 95.15, paragraph (a) is revised to read as follows:

§ 95.15 Approval for processing licensees and others for facility clearance.

(a) A licensee, certificate holder, or other person who has a need to use, process, store, reproduce, transmit, transport, or handle NRC classified information at any location in connection with Commission-related activities shall promptly request an NRC facility clearance. This specifically includes situations where a licensee, certificate holder, or other person needs a contractor or consultant to have access to NRC classified information. Also included are others who require access to classified information in connection with NRC regulated activities but do not require use, storage, or possession of classified information outside of NRC facilities. However, it is not necessary for a licensee, certificate holder, or other person to request an NRC facility clearance for access to another agency's classified information at that agency's facilities or to store that agency's classified information at their facility, provided no NRC classified information is involved and they meet the security requirements of the other agency. If NRC classified information is involved, the requirements of § 95.17 apply.

* * * * *

48. In § 95.17, the introductory text of paragraph (a) and paragraph (a)(1) are revised to read as follows:

§ 95.17 Processing facility clearance.

(a) Following the receipt of an acceptable request for facility clearance, the NRC will either accept an existing facility clearance granted by a current CSA and authorize possession of license or certificate related classified information, or process the facility for a facility clearance. Processing will include—

(1) A determination based on review and approval of a Standard Practice Procedures Plan that granting of the Facility Clearance would not be inconsistent with the national interest, including a finding that the facility is not under foreign ownership, control, or influence to such a degree that a determination could not be made. An NRC finding of foreign ownership, control, or influence is based on factors concerning the foreign intelligence threat, risk of unauthorized technology transfer, type and sensitivity of the information that requires protection, the extent of foreign influence, record of compliance with pertinent laws, and the nature of international security and information exchange agreements. The licensee, certificate holder, or other person must advise the NRC within 30 days of any significant events or changes that may affect its status concerning foreign ownership, control, or influence (e.g., changes in ownership; changes that affect the company's answers to original FOCI questions; indebtedness; and changes in the required form that identifies owners, officers, directors, and executive personnel).

* * * * *

49. Section 95.19 is revised to read as follows:

§ 95.19 Changes to security practices and procedures.

(a) Except as specified in paragraph (b) of this section, each licensee, certificate holder, or other person shall

obtain prior CSA approval for any proposed change to the name, location, security procedures and controls, or floor plan of the approved facility. A written description of the proposed change must be furnished to the CSA with copies to the Director, Division of Facilities and Security, Office of Administration, NRC, Washington, DC 20555–0001 (if NRC is not the CSA), and the NRC Regional Administrator of the cognizant Regional Office listed in appendix A of part 73 of this chapter. These substantive changes to the Standard Practice Procedures Plan that affect the security of the facility must be submitted to the NRC Division of Facilities and Security, or CSA, at least 30 days prior to the change so that they may be evaluated. The CSA shall promptly respond in writing to all such proposals. Some examples of substantive changes requiring prior CSA approval include—

(1) A change in the approved facility's classified mail address; or

(2) A temporary or permanent change in the location of the approved facility (e.g., moving or relocating NRC's classified interest from one room or building to another). Approved changes will be reflected in a revised Standard Practice Procedures Plan submission within 30 days of approval. Page changes rather than a complete rewrite of the plan may be submitted.

(b) A licensee or other person may effect a minor, non-substantive change to an approved Standard Practice Procedures Plan for the safeguarding of classified information without receiving prior CSA approval. These minor changes that do not affect the security of the facility may be submitted to the addressees noted in paragraph (a) of this section within 30 days of the change. Page changes rather than a complete rewrite of the plan may be submitted. Some examples of minor, non-substantive changes to the Standard Practice Procedures Plan include—

(1) The designation/appointment of a new facility security officer; or

(2) A revision to a protective personnel patrol routine, provided the new routine continues to meet the minimum requirements of this part.

(c) A licensee, certificate holder, or other person must update its NRC facility clearance every five years either by submitting a complete Standard Practice Procedures Plan or a certification that the existing plan is fully current to the Division of Facilities and Security.

50. Section 95.20 is revised to read as follows:

§ 95.20 Grant, denial or termination of facility clearance.

The Division of Facilities and Security shall provide notification in writing (or orally with written confirmation) to the licensee or other organization of the Commission's grant, acceptance of another agency's facility clearance, denial, or termination of facility clearance. This information must also be furnished to representatives of the NRC, NRC licensees, NRC certificate holders, NRC contractors, or other Federal agencies having a need to transmit classified information to the licensee or other person.

51. Section 95.21 is revised to read as follows:

§ 95.21 Withdrawal of requests for facility security clearance.

When a request for facility clearance is to be withdrawn or canceled, the requester shall notify the NRC Division of Facilities and Security in the most expeditious manner so that processing for this approval may be terminated. The notification must identify the full name of the individual requesting discontinuance, his or her position with the facility, and the full identification of the facility. The requestor shall confirm the telephone notification promptly in writing.

52. In § 95.25, the heading, the introductory text of paragraph (a), paragraphs (a)(2), (b), (c)(2), (f), (g), (h), (i), (j)(1), (j)(6), and (j)(7) are revised to read as follows:

§ 95.25 Protection of National Security Information and Restricted Data in storage.

(a) Secret matter, while unattended or not in actual use, must be stored in—

* * * * *

(2) Any steel file cabinet that has four sides and a top and bottom (all permanently attached by welding, rivets, or peened bolts so the contents cannot be removed without leaving visible evidence of entry) and is secured by a rigid metal lock bar and an approved key operated or combination padlock. The keepers of the rigid metal lock bar must be secured to the cabinet by welding, rivets, or bolts, so they cannot be removed and replaced without leaving evidence of the entry. The drawers of the container must be held securely so their contents cannot be removed without forcing open the drawer. This type of cabinet will be accorded supplemental protection during non-working hours.

(b) Confidential matter while unattended or not in use must be stored in the same manner as SECRET matter except that no supplemental protection is required.

(c) * * *

(2) Combinations must be changed by a person authorized access to the contents of the container, by the Facility Security Officer, or his or her designee.

* * * * *

(f) Combinations will be changed only by persons authorized access to Secret or Confidential National Security Information and/or Restricted Data depending upon the matter authorized to be stored in the security container.

(g) Posted information. Containers may not bear external markings indicating the level of classified matter authorized for storage. A record of the names of persons having knowledge of the combination must be posted inside the container.

(h) End of day security checks.

(1) Facilities that store classified matter shall establish a system of security checks at the close of each working day to ensure that all classified matter and security repositories have been appropriately secured.

(2) Facilities operating with multiple work shifts shall perform the security checks at the end of the last working shift in which classified matter had been removed from storage for use. The checks are not required during continuous 24-hour operations.

(i) Unattended security container found opened. If an unattended security container housing classified matter is found unlocked, the custodian or an alternate must be notified immediately. Also, the container must be secured by protective personnel. An effort must be made to determine if the contents were compromised not later than the next day.

(j) * * *

(1) A key and lock custodian shall be appointed to ensure proper custody and handling of keys and locks used for protection of classified matter;

* * * * *

(6) Keys and spare locks must be protected equivalent to the level of classified matter involved;

(7) Locks must be changed or rotated at least every 12 months, and must be replaced after loss or compromise of their operable keys; and

* * * * *

53. Section 95.27 is revised to read as follows:

§ 95.27 Protection while in use.

While in use, classified matter must be under the direct control of an authorized individual to preclude physical, audio, and visual access by persons who do not have the prescribed

access authorization or other written CSA disclosure authorization (see § 95.36 for additional information concerning disclosure authorizations).

54. In § 95.29, paragraphs (a), (c)(2), and (c)(4) are revised to read as follows:

§ 95.29 Establishment of restricted or closed areas.

(a) If, because of its nature, sensitivity or importance, classified matter cannot otherwise be effectively controlled in accordance with the provisions of §§ 95.25 and 95.27, a Restricted or Closed area must be established to protect this matter.

* * * * *

(c) * * *

(2) Access must be limited to authorized persons who have an appropriate security clearance and a need-to-know for the classified matter within the area. Persons without the appropriate level of clearance and/or need-to-know must be escorted at all times by an authorized person where inadvertent or unauthorized exposure to classified information cannot otherwise be effectively prevented.

* * * * *

(4) Open shelf or bin storage of classified matter in Closed Areas requires CSA approval. Only areas protected by an approved intrusion detection system will qualify for approval.

55. In § 95.33, paragraph (f) is revised to read as follows:

§ 95.33 Security education.

* * * * *

(f) Refresher Briefings. The licensee or other facility shall conduct refresher briefings for all cleared employees every 3 years. As a minimum, the refresher briefing must reinforce the information provided during the initial briefing and inform employees of appropriate changes in security regulations. This requirement may be satisfied by use of audio/video materials and/or by issuing written materials.

* * * * *

56. A new § 95.34 is added to read as follows:

§ 95.34 Control of visitors.

(a) *Uncleared visitors.* Licensees, certificate holders, or others subject to this part shall take measures to preclude access to classified information by uncleared visitors.

(b) *Foreign visitors.* Licensees, certificate holders, or others subject to this part shall take measures as may be necessary to preclude access to classified information by foreign visitors. The licensee, certificate holder, or others shall retain records of visits for 5 years beyond the date of the visit.

57. In § 95.36, paragraphs (a), (c), and (d) are revised to read as follows:

§ 95.36 Access by representatives of the International Atomic Energy Agency or by participants in other international agreements.

(a) Based upon written disclosure authorization from the NRC Division of Facilities and Security that an individual is an authorized representative of the International Atomic Energy Agency (IAEA) or other international organization and that the individual is authorized to make visits or inspections in accordance with an established agreement with the United States Government, a licensee, certificate holder, or other person subject to this part shall permit the individual (upon presentation of the credentials specified in § 75.7 of this chapter and any other credentials identified in the disclosure authorization) to have access to matter classified as National Security Information that is relevant to the conduct of a visit or inspection. A disclosure authorization under this section does not authorize a licensee, certificate holder, or other person subject to this part to provide access to Restricted Data.

* * * * *

(c) In accordance with the specific disclosure authorization provided by the Division of Facilities and Security, licensees or other persons subject to this part are authorized to release (i.e., transfer possession of) copies of documents that contain classified National Security Information directly to IAEA inspectors and other representatives officially designated to request and receive classified National Security Information documents. These documents must be marked specifically for release to IAEA or other international organizations in accordance with instructions contained in the NRC's disclosure authorization letter. Licensees and other persons subject to this part may also forward these documents through the NRC to the international organization's headquarters in accordance with the NRC disclosure authorization. Licensees and other persons may not reproduce documents containing classified National Security Information except as provided in § 95.43.

(d) Records regarding these visits and inspections must be maintained for 5 years beyond the date of the visit or inspection. These records must specifically identify each document released to an authorized representative and indicate the date of the release. These records must also identify (in such detail as the Division of Facilities and Security, by letter, may require) the categories of documents that the authorized representative has had access and the date of this access. A licensee or other person subject to this part shall also retain Division of Facilities and Security disclosure authorizations for 5 years beyond the date of any visit or inspection when access to classified information was permitted.

* * * * *

58. In § 95.37, paragraph (c)(1)(iv) is removed and paragraphs (c)(1)(i) and (h)(2) are revised to read as follows:

§ 95.37 Classification and preparation of documents.

* * * * *

(c) * * *

(1) * * *

(i) Derivative classifications of classified National Security Information must contain the identity of the source document or the classification guide, including the agency and office of origin, on the ''Derived From'' line and its classification date. If more than one source is cited, the ''Derived From'' line should indicate ''Multiple Sources.'' The derivative classifier shall maintain the identification of each source with the file or record copy of the derivatively classified document.

* * * * *

(h) * * *

(2) In the event of a question regarding classification review, the holder of the information or the authorized classifier shall consult the NRC Division of Facilities and Security, Information Security Branch, for assistance.

* * * * *

59. In § 95.39, paragraphs (b)(3) and (c)(2) are revised to read as follows:

§ 95.39 External transmission of classified matter.

* * * * *

(b) * * *

(3) The outer envelope or wrapper must contain the addressee's classified mailing address. The outer envelope or wrapper may not contain any classification, additional marking or other notation that indicate that the enclosed document contains classified information. The Classified Mailing Address shall be uniquely designated for the receipt of classified information. The classified shipping address for the receipt of material (e.g., equipment) should be different from the classified

mailing address for the receipt of classified documents.

* * * * *

(c) * * *

(2) Confidential matter may be transported by one of the methods set forth in paragraph (c)(1) of this section, by U.S. express or certified mail. Express or certified mail may be used in transmission of Confidential documents to Puerto Rico or any United States territory or possession.

* * * * *

60. In § 95.45, paragraph (a) is revised to read as follows:

§ 95.45 Changes in classification.

(a) Documents containing classified National Security Information must be downgraded or declassified as authorized by the NRC classification guides or as determined by the NRC. Requests for downgrading or declassifying any NRC classified information should be forwarded to the NRC Division of Facilities and Security, Office of Administration, Washington, DC 20555–0001. Requests for downgrading or declassifying of Restricted Data will be forwarded to the NRC Division of Facilities and Security for coordination with the Department of Energy.

* * * * *

61. Section 95.47 is revised to read as follows:

§ 95.47 Destruction of matter containing classified information.

Documents containing classified information may be destroyed by burning, pulping, or another method that ensures complete destruction of the information that they contain. The method of destruction must preclude recognition or reconstruction of the classified information. Any doubts on methods should be referred to the CSA.

62. Section 95.53 is revised to read as follows:

§ 95.53 Termination of facility clearance.

(a) If the need to use, process, store, reproduce, transmit, transport, or handle classified matter no longer exists, the facility clearance will be terminated. The facility may deliver all documents and matter containing classified information to the Commission, or to a person authorized to receive them, or must destroy all classified documents and matter. In either case, the facility shall submit a certification of nonpossession of classified information to the NRC Division of Facilities and Security within 30 days of the termination of the facility clearance.

(b) In any instance where a facility clearance has been terminated based on a determination of the CSA that further possession of classified matter by the facility would not be in the interest of the national security, the facility shall, upon notice from the CSA, dispose of classified documents in a manner specified by the CSA.

63. Section 95.57 is revised to read as follows:

§ 95.57 Reports.

Each licensee or other person having a facility clearance shall report to the CSA and the Regional Administrator of the appropriate NRC Regional Office listed in 10 CFR part 73, appendix A:

(a) Any alleged or suspected violation of the Atomic Energy Act, Espionage Act, or other Federal statutes related to classified information (e.g., deliberate disclosure of classified information to persons not authorized to receive it, theft of classified information). Incidents such as this must be reported within 1 hour of the event followed by written confirmation within 30 days of the incident; and

(b) Any infractions, losses, compromises, or possible compromise of classified information or classified documents not falling within paragraph (a) of this section. Incidents such as these must be entered into a written log. A copy of the log must be provided to the NRC on a monthly basis. Details of security infractions including corrective action taken must be available to the CSA upon request.

(c) In addition, NRC requires records for all classification actions (documents classified, declassified, or downgraded) to be submitted to the NRC Division of Facilities and Security. These may be submitted either on an ''as completed'' basis or monthly. The information may be submitted either electronically by an on-line system (NRC prefers the use of a dial-in automated system connected to the Division of Facilities and Security) or by paper copy using NRC Form 790.

Dated at Rockville, MD, this 22nd day of March, 1999.

For the Nuclear Regulatory Commission.

William D. Travers,

Executive Director for Operations.

[FR Doc. 99–7842 Filed 3–31–99; 8:45 am]

BILLING CODE 7590–01–P

FEDERAL DEPOSIT INSURANCE CORPORATION

12 CFR Part 330

RIN 3064–AC16

Deposit Insurance Regulations; Joint Accounts and ''Payable-on-Death'' Accounts

AGENCY: Federal Deposit Insurance Corporation (FDIC).

ACTION: Final rule.

SUMMARY: The FDIC is amending its regulations governing the insurance coverage of joint ownership accounts and revocable trust (or payable-on-death) accounts. The amendments are almost identical to the amendments proposed by the FDIC in July 1998; they supplement other revisions that became effective in July. The purpose of the amendments is to increase the public's understanding of the insurance rules through simplification.

The final rule makes three changes to the deposit insurance regulations. First, it eliminates step one of the two-step process for determining the insurance coverage of joint accounts. Second, it changes the insurance coverage of ''payable-on-death'' accounts by adding parents and siblings to the list of ''qualifying beneficiaries''. Third, it makes certain technical amendments to the FDIC's rules regarding the coverage of accounts held by agents or fiduciaries.

DATES: Effective April 1, 1999.

FOR FURTHER INFORMATION CONTACT: Christopher L. Hencke, Counsel, (202) 898–8839, or Joseph A. DiNuzzo, Counsel, (202) 898–7349, Legal Division, Federal Deposit Insurance Corporation, 550 17th Street, NW, Washington, DC 20429.

SUPPLEMENTARY INFORMATION:

I. Simplifying the Insurance Regulations

Federal deposit insurance plays a critical role in assuring stability and public confidence in the nation's financial system. Deposit insurance cannot play this role, however, unless the rules governing the application of the $100,000 insurance limit are understood by depositors. Misunderstandings can lead to a loss of depositors' funds with a resulting loss of public confidence.

Unfortunately, some of the FDIC's insurance rules have been widely misunderstood. See 63 FR 38521 (July 17, 1998). This confusion prompted the FDIC to initiate a simplification effort. As a result of that effort, the FDIC issued

a final rule, effective July 1, 1998, to ''clarify and simplify'' the FDIC's deposit insurance regulations. See 63 FR 25750 (May 11, 1998). The final rule made numerous technical and substantive amendments to the insurance regulations, including the use of plainer language and examples. To further simplify and clarify the deposit insurance rules, in July 1998, the FDIC published a proposed rule to amend the regulations dealing with joint accounts and ''payable-on-death'' (or POD) accounts. See 63 FR 38521 (July 17, 1998). The proposed rule is described in detail below.

II. The Proposed Rule

A. Joint Accounts

Under the FDIC's insurance rules, qualifying joint accounts are insured separately from any single ownership accounts maintained by the co-owners at the same insured depository institution. See 12 CFR 330.9(a). A joint account is a ''qualifying'' joint account if it satisfies certain requirements: (1) The co-owners must be natural persons; (2) each co-owner must personally sign a deposit account signature card; and (3) the withdrawal rights of the co-owners must be equal. See 12 CFR 330.9(c)(1). The requirement involving signature cards is inapplicable if the account at issue is a certificate of deposit, a deposit obligation evidenced by a negotiable instrument, or an account maintained for the co-owners by an agent or custodian. See 12 CFR 330.9(c)(2).

Assuming these requirements are satisfied, the current rules (i.e., the rules in effect prior to the effective date of this final rule) provide that the $100,000 insurance limit shall be applied in a two-step process. First, all joint accounts owned by the same combination of persons at the same insured depository institution are added together and insured to a limit of $100,000. Second, the interests of each person in all joint accounts, whether owned by the same or some other combination of persons, are added together and insured to a limit of $100,000. See 12 CFR 330.9(b).

The two-step process for insuring joint accounts has been misunderstood by bank employees as well as depositors. This widespread confusion has resulted in the loss by some depositors of significant sums of money. For example, at one failed depository institution, three individuals held three joint accounts (and no other types of accounts). The interest of each individual was less than $100,000. The individuals chose to place all of their funds in joint accounts so that each of them would have access to the money in the event of an emergency or sudden illness. When the institution failed, step one of the two-step process required the aggregation of the three joint accounts. The amount in excess of $100,000 was uninsured.

In this example, all of the funds owned by the three joint owners could have been insured if the funds had been held in individual accounts as opposed to joint accounts. Thus, the depositors did not suffer a loss because they placed too much money in a single depository institution that failed. Rather, they suffered a loss simply because they misunderstood the FDIC's regulations. See also *Sekula* v. *FDIC*, 39 F.3d 448 (3d Cir. 1994).

In order to simplify the coverage of joint accounts, the FDIC proposed to eliminate the first step of the two-step process.

B. POD Accounts

Under the current rules (i.e., the rules in effect prior to the effective date of this final rule), qualifying revocable trust (or POD) accounts are insured separately from any other types of accounts maintained by either the owner or the beneficiaries at the same insured depository institution. See 12 CFR 330.10(a).

A POD account is a ''qualifying'' POD account if it satisfies certain requirements: (1) The beneficiaries must be the spouse, children or grandchildren of the owner; (2) the beneficiaries must be specifically named in the deposit account records; (3) the title of the account must include a term such as ''in trust for'' or ''payable-on-death to'' (or any acronym therefor); and (4) the intention of the owner of the account (as evidenced by the account title or any accompanying revocable trust agreement) must be that the funds shall belong to the named beneficiaries upon the owner's death. If the account has been opened pursuant to a formal ''living trust'' agreement, the fourth requirement means that the agreement must not place any conditions upon the interests of the beneficiaries that might prevent the beneficiaries (or their estates or heirs) from receiving the funds following the death of the owner. Such conditions are known as ''defeating contingencies''.

Assuming these requirements are satisfied, the $100,000 insurance limit is not applied on a ''per owner'' basis. Rather, the $100,000 insurance limit is applied on a ''per beneficiary'' basis to all POD accounts owned by the same person at the same insured depository institution. For example, a POD account owned by one person would be insured up to $500,000 if the account names five qualifying beneficiaries.

If one of the named beneficiaries of a POD account is not a qualifying beneficiary, the funds corresponding to that beneficiary are treated for insurance purposes as single ownership funds of the owner (i.e., the account holder). In other words, they are aggregated with any funds in any single ownership accounts of the owner and insured to a limit of $100,000. See 12 CFR 330.10(b).

On a number of occasions, depositors have lost money upon the failure of an insured depository institution because they believed that POD accounts are insured on a simple ''per beneficiary'' or ''per family member'' basis. They did not understand the difference between qualifying beneficiaries and non-qualifying beneficiaries. Typically, in such cases, the named beneficiary has been a parent or sibling. In the absence of a qualifying beneficiary, the POD account has been aggregated with the owner's single ownership accounts.

In response to such cases, the FDIC proposed adding siblings and parents to the list of qualifying beneficiaries. The purpose of this proposal was to protect most depositors who misunderstand the rules governing POD accounts without abandoning the basic concept that insurance for such accounts is provided up to $100,000 on a ''per qualifying beneficiary'' basis.

III. The Final Rule

The FDIC received forty-one comments on the proposed rule. The commenters can be divided into five categories: depository institutions (25); banking trade associations (9); bank holding companies (3); individuals (3); and other (1) (a computer software company). Of these comments, the vast majority supported the proposed amendments. Only two comments were critical of the proposed amendments.

The typical comment on the joint account revision praised the FDIC for proposing to eliminate the ''most confusing and misunderstood'' part of the current insurance regulations. The most pervasive comment on the POD account revision was that the amendment to add parents and siblings as qualified beneficiaries has been ''long overdue''.

Of the two critical comments, one suggested that the FDIC lacks the authority to eliminate step one of the two-step process for insuring joint accounts. In the commenter's opinion, the elimination of step one would violate the statutory mandate that the FDIC—in applying the $100,000 insurance limit—must ''aggregate the amounts of all deposits in the insured

depository institution which are maintained by a depositor in the same capacity and the same right for the benefit of the depositor * * *.'' 12 U.S.C. 1821(a)(1)(C). Specifically, the commenter argued that an account held by a particular combination of co-owners represents a single ''right and capacity''. In other words, under this argument, the combinations of co-owners—and not the individual persons—are the ''depositors'' of joint accounts. Therefore, such an account cannot be insured for more than the statutory insurance limit of $100,000 (as prescribed by step one).

The argument above is consistent with the FDIC's approach toward insuring joint accounts prior to 1967. It is inconsistent, however, with the FDIC's creation in 1967 of step two of the two-step process. See 32 FR 10408 (July 14, 1967). Under step two, the FDIC has treated the individual persons as the ''depositors''. Nothing in the Federal Deposit Insurance Act precludes this longstanding interpretation.

Through the elimination of step one, the regulations provide a simple $100,000 insurance limit for the interest of each person (a depositor) in all joint accounts (an ownership right and capacity). The FDIC believes that this result will be consistent with the statutory limit of $100,000 for ''the amounts of all deposits in the insured depository institution which are maintained by a depositor in the same capacity and the same right * * *.'' 12 U.S.C. 1821(a)(1)(C). Moreover, as recognized by the vast majority of commenters, this result will be much easier to understand than the two-step process. Accordingly, the Board has decided to adopt the proposed elimination of step one.

As a result of this final rule, the maximum insurance coverage of a particular joint account (or group of joint accounts owned by the same combination of persons) will no longer be $100,000. In the case of a joint account of $200,000 owned by two persons, for example, the maximum coverage will increase from $100,000 to $200,000 (or $100,000 for the interest of each owner). The maximum coverage that any one person can obtain for his/her interests in all qualifying joint accounts, however, will remain $100,000.

The second critical comment argued that the proposed amendments would not accomplish the objective of simplifying the regulations. In the case of the elimination of step one of the two-step process for insuring joint accounts (discussed above), this argument is unfounded. As recognized by the vast majority of commenters, a one-step process is simpler than a two-step process. In the case of the POD account amendment, the argument is stronger because the amendment will not eliminate the concept of ''qualifying beneficiaries''. By adding parents and siblings to the list of ''qualifying beneficiaries'', however, the amendment will reduce the number of cases in which a depositor's confusion results in a loss of funds. In other words, the amendment may not eliminate confusion but will protect most depositors from the negative consequences of such confusion. For this reason, the Board has decided to adopt the proposed amendment. Unlike the proposed rule, the final rule defines the terms ''parents'', ''brothers'' and ''sisters''.

The subject of ''living trust'' accounts should be mentioned. A ''living trust'' account is a POD account opened pursuant to a formal ''living trust'' agreement. By expanding the list of ''qualifying beneficiaries'', the final rule will not remove the complicated methodology for determining the insurance coverage of such accounts. This methodology requires a determination as to whether the interest of each beneficiary is subject to any conditions or contingencies (referred to by the FDIC as defeating contingencies) that might prevent the beneficiary from receiving his/her share of funds following the death of the owner. Most ''living trust'' agreements include defeating contingencies. As a result, most ''living trust'' accounts are classified by the FDIC for insurance purposes as single ownership accounts. In other words, the account is aggregated with any single ownership accounts of the owner at the same depository institution and insured to a limit of only $100,000. See 12 CFR 330.10(f).

IV. Technical Amendments

Under the FDIC's rules regarding the insurance coverage of accounts held by agents or fiduciaries, the funds in such accounts are insured to the same extent as if deposited in the names of the principals. See 12 CFR 330.7(a). In other words, the insurance coverage ''passes through'' the agent or custodian to the principal or actual owner. The account will not be entitled to such ''pass-through'' coverage, however, unless the agency or fiduciary relationship is disclosed in the deposit account records. See 12 CFR 330.5(b).

The necessity of disclosing fiduciary relationships in the account records has been referred to as a ''recordkeeping requirement'' in the insurance regulations. The term ''recordkeeping requirement'' may suggest to some depository institutions that they possess an affirmative duty to collect information regarding fiduciary relationships. In fact, no such duty exists. For this reason, the FDIC has decided to rephrase certain sections of the regulations.

The final rule removes ''recordkeeping requirements'' from the section heading at 12 CFR 330.5 and the paragraph headings at 12 CFR 330.5(b) and 12 CFR 330.5(b)(4). Also, the term is removed from 12 CFR 330.14(a).

The paragraph at 12 CFR 330.5(b)(1) provides that no claim for insurance coverage based on a fiduciary relationship will be recognized unless the fiduciary relationship is disclosed in the account records. The final rule revises this paragraph so as to remove any suggestion that depository institutions are subject to reporting requirements with respect to accounts held by agents or fiduciaries. Specifically, the final rule changes language resembling a command directed at depository institutions (''[t]he 'deposit account records' * * * of an insured depository institution must expressly disclose * * * the existence of any fiduciary relationship'') to a statement describing the consequences of failing to disclose a fiduciary relationship (''[t]he FDIC will recognize a claim for insurance coverage based on a fiduciary relationship only if the relationship is expressly disclosed * * *'').

These amendments are technical. Their sole purpose is clarification. For this reason, the Board finds ''good cause'' for adopting these amendments without the rulemaking procedures generally required by the Administrative Procedure Act. See 5 U.S.C. 553. Inasmuch as this amendment will have no effect upon the operation of the insurance regulations, these procedures are unnecessary.

V. Effective Date

The Administrative Procedure Act generally requires the publication of a substantive rule at least thirty days before its effective date. One of the exceptions is for ''good cause''. 5 U.S.C. 553(d). In the case of this final rule, the Board finds ''good cause'' to make the amendments effective immediately upon publication in the **Federal Register**. ''Good cause'' exists because the amendments will not prejudice any depositor or depository institution. On the contrary, the amendments will result in increased insurance coverage for some depositors who may misunderstand the current rules (for

example, two individuals with a qualifying joint account of $200,000; or an individual who has named a sibling as the beneficiary of a POD account). By making the amendments effective immediately, the Board will protect depositors of any FDIC-insured institutions that may fail within the thirty-day period following publication.

With certain exceptions, the Riegle Community Development and Regulatory Improvement Act of 1994 (Public Law 103–325) provides that the federal banking agencies may not impose new regulatory reporting requirements on insured depository institutions except on the first day of a calendar quarter after the date of publication. See 12 U.S.C. 4802(b). This rule is inapplicable because the final rule imposes no reporting, disclosure or other new requirements on insured depository institutions.

VI. Paperwork Reduction Act

The final rule will simplify the FDIC's deposit insurance regulations governing joint accounts and POD accounts. It will not involve any collections of information under the Paperwork Reduction Act (44 U.S.C. 3501 *et seq.*). Consequently, no information has been submitted to the Office of Management and Budget for review.

VII. Regulatory Flexibility Act

The final rule will not have a significant impact on a substantial number of small businesses within the meaning of the Regulatory Flexibility Act (5 U.S.C. 601 et seq.). The amendments to the deposit insurance rules will apply to all FDIC-insured depository institutions and will impose no new reporting, recordkeeping or other compliance requirements upon those entities. Accordingly, the Act's requirements relating to an initial and final regulatory flexibility analysis are not applicable.

VIII. Small Business Regulatory Enforcement Fairness Act

The Office of Management and Budget has determined that the final rule is not a ''major rule'' within the meaning of the relevant sections of the Small Business Regulatory Enforcement Fairness Act of 1996 (SBREFA) (5 U.S.C. 801 *et seq.*). As required by SBREFA, the FDIC will file the appropriate reports with Congress and the General Accounting Office so that the final rule may be reviewed.

List of Subjects in 12 CFR Part 330

Bank deposit insurance, Banks, banking, Reporting and recordkeeping requirements, Savings and loan associations, Trusts and trustees.

The Board of Directors of the Federal Deposit Insurance Corporation hereby amends part 330 of chapter III of title 12 of the Code of Federal Regulations as follows:

PART 330—DEPOSIT INSURANCE COVERAGE

1. The authority citation for part 330 continues to read as follows:

Authority: 12 U.S.C. 1813(l), 1813(m), 1817(i), 1818(q), 1819(Tenth), 1820(f), 1821(a), 1822(c).

2. In § 330.3, paragraph (h) is revised to read as follows:

§ 330.3 General principles.

* * * * *

(h) *Application of state or local law to deposit insurance determinations.* In general, deposit insurance is for the benefit of the owner or owners of funds on deposit. However, while ownership under state law of deposited funds is a necessary condition for deposit insurance, ownership under state law is not sufficient for, or decisive in, determining deposit insurance coverage. Deposit insurance coverage is also a function of the deposit account records of the insured depository institution and of the provisions of this part, which, in the interest of uniform national rules for deposit insurance coverage, are controlling for purposes of determining deposit insurance coverage.

* * * * *

3. In § 330.5, the section heading and paragraphs (b)(1), (b)(4) heading, and (b)(4)(i) are revised to read as follows:

§ 330.5 Recognition of deposit ownership and fiduciary relationships.

* * * * *

(b) *Fiduciary relationships*—(1) *Recognition.* The FDIC will recognize a claim for insurance coverage based on a fiduciary relationship only if the relationship is expressly disclosed, by way of specific references, in the ''deposit account records'' (as defined in § 330.1(e)) of the insured depository institution. Such relationships include, but are not limited to, relationships involving a trustee, agent, nominee, guardian, executor or custodian pursuant to which funds are deposited. The express indication that the account is held in a fiduciary capacity will not be necessary, however, in instances where the FDIC determines, in its sole discretion, that the titling of the deposit account and the underlying deposit account records sufficiently indicate the existence of a fiduciary relationship. This exception may apply, for example, where the deposit account title or records indicate that the account is held by an escrow agent, title company or a company whose business is to hold deposits and securities for others.

* * * * *

(4) *Exceptions*—(i) *Deposits evidenced by negotiable instruments.* If any deposit obligation of an insured depository institution is evidenced by a negotiable certificate of deposit, negotiable draft, negotiable cashier's or officer's check, negotiable certified check, negotiable traveler's check, letter of credit or other negotiable instrument, the FDIC will recognize the owner of such deposit obligation for all purposes of claim for insured deposits to the same extent as if his or her name and interest were disclosed on the records of the insured depository institution; provided, that the instrument was in fact negotiated to such owner prior to the date of default of the insured depository institution. The owner must provide affirmative proof of such negotiation, in a form satisfactory to the FDIC, to substantiate his or her claim. Receipt of a negotiable instrument directly from the insured depository institution in default shall, in no event, be considered a negotiation of said instrument for purposes of this provision.

* * * * *

4. In § 330.9, paragraph (b) is revised to read as follows:

§ 330.9 Joint ownership accounts.

* * * * *

(b) *Determination of insurance coverage.* The interests of each co-owner in all qualifying joint accounts shall be added together and the total shall be insured up to $100,000. (Example: ''A&B'' have a qualifying joint account with a balance of $60,000; ''A&C'' have a qualifying joint account with a balance of $80,000; and ''A&B&C'' have a qualifying joint account with a balance of $150,000. A's combined ownership interest in all qualifying joint accounts would be $120,000 ($30,000 plus $40,000 plus $50,000); therefore, A's interest would be insured in the amount of $100,000 and uninsured in the amount of $20,000. B's combined ownership interest in all qualifying joint accounts would be $80,000 ($30,000 plus $50,000); therefore, B's interest would be fully insured. C's combined ownership interest in all qualifying joint accounts would be $90,000 ($40,000 plus $50,000); therefore, C's interest would be fully insured.)

* * * * *

5. In § 330.10, paragraphs (a) and (e) are revised to read as follows:

§ 330.10 Revocable trust accounts.

(a) *General rule.* Funds owned by an individual and deposited into an account with respect to which the owner evidences an intention that upon his or her death the funds shall belong to one or more qualifying beneficiaries shall be insured in the amount of up to $100,000 in the aggregate as to each such named qualifying beneficiary, separately from any other accounts of the owner or the beneficiaries. For purposes of this provision, the term ''qualifying beneficiaries'' means the owner's spouse, child/children, grandchild/grandchildren, parent/parents, brother/brothers or sister/sisters. (Example: If A establishes a qualifying account payable upon death to his spouse, sibling and two children, assuming compliance with the rules of this provision, the account would be insured up to $400,000 separately from any other different types of accounts either A or the beneficiaries may have with the same depository institution.) Accounts covered by this provision are commonly referred to as tentative or ''Totten trust'' accounts, ''payable-on-death'' accounts, or revocable trust accounts.

* * * * *

(e) *Definition of ''children'', ''grandchildren'', ''parents'', ''brothers'' and ''sisters''.* For the purpose of establishing the qualifying degree of kinship identified in paragraph (a) of this section, the term ''children'' includes biological, adopted and step-children of the owner. The term ''grandchildren'' includes biological, adopted and step-children of any of the owner's children. The term ''parents'' includes biological, adoptive and step-parents of the owner. The term ''brothers'' includes full brothers, half brothers, brothers through adoption and step-brothers. The term ''sisters'' includes full sisters, half sisters, sisters through adoption and step-sisters.

* * * * *

6. In § 330.14, paragraph (a) is revised to read as follows:

§ 330.14 Retirement and other employee benefit plan accounts.

(a) *''Pass-through'' insurance.* Except as provided in paragraph (b) of this section, any deposits of an employee benefit plan or of any eligible deferred compensation plan described in section 457 of the Internal Revenue Code of 1986 (26 U.S.C. 457) in an insured depository institution shall be insured on a ''pass-through'' basis, in the amount of up to $100,000 for the non-contingent interest of each plan participant, provided that the rules prescribed in § 330.5 are satisfied.

* * * * *

By order of the Board of Directors.

Dated at Washington, D.C., this 23rd day of March, 1999.

Federal Deposit Insurance Corporation.

Robert E. Feldman,

Executive Secretary.

[FR Doc. 99–7736 Filed 3–31–99; 8:45 am]

BILLING CODE 6714–01–P

DEPARTMENT OF TRANSPORTATION

Federal Aviation Administration

14 CFR Part 39

[Docket No. 98–NM–166–AD; Amendment 39–11099; AD 99–07–14]

RIN 2120–AA64

Airworthiness Directives; McDonnell Douglas Model DC–9–80 Series Airplanes, and Model MD–88 Airplanes

AGENCY: Federal Aviation Administration, DOT.

ACTION: Final rule.

SUMMARY: This amendment adopts a new airworthiness directive (AD), applicable to certain McDonnell Douglas Model DC–9–80 series airplanes, and Model MD–88 airplanes, that requires a one-time inspection to detect corrosion of the lug bores and the surface of the hinge plates of the vertical-to-horizontal stabilizer; and corrective actions, if necessary. This amendment is prompted by reports of corrosion of the lug bores and the surface of the hinge plates of the vertical-to-horizontal stabilizer, apparently due to the improper brushing of cadmium on the hinge plates during manufacture. The actions specified by this AD are intended to detect and correct corrosion of the lug bores and the surface of the hinge plates of the vertical-to-horizontal stabilizer, which could result in reduced structural integrity of the airplane.

DATES: Effective May 6, 1999.

The incorporation by reference of certain publications listed in the regulations is approved by the Director of the **Federal Register** as of May 6, 1999.

ADDRESSES: The service information referenced in this AD may be obtained from Boeing Commercial Aircraft Group, Long Beach Division, 3855 Lakewood Boulevard, Long Beach, California 90846, Attention: Technical Publications Business Administration, Dept. C1–L51 (2–60). This information may be examined at the Federal Aviation Administration (FAA), Transport Airplane Directorate, Rules Docket, 1601 Lind Avenue, SW., Renton, Washington; or at the FAA, Transport Airplane Directorate, Los Angeles Aircraft Certification Office, 3960 Paramount Boulevard, Lakewood, California; or at the Office of the **Federal Register**, 800 North Capitol Street, NW., suite 700, Washington, DC.

FOR FURTHER INFORMATION CONTACT: Brent Bandley, Aerospace Engineer, Airframe Branch, ANM–120L, FAA, Transport Airplane Directorate, Los Angeles Aircraft Certification Office, 3960 Paramount Boulevard, Lakewood, California 90712–4137; telephone (562) 627–5237; fax (562) 627–5210.

SUPPLEMENTARY INFORMATION: A proposal to amend part 39 of the Federal Aviation Regulations (14 CFR part 39) to include an airworthiness directive (AD) that is applicable to certain McDonnell Douglas Model DC–9–80 series airplanes, and Model MD–88 airplanes was published in the **Federal Register** on June 26, 1998 (63 FR 34832). That action proposed to require a one-time inspection to detect corrosion of the lug bores and the surface of the hinge plates of the vertical-to-horizontal stabilizer; and corrective actions, if necessary.

Comments Received

Interested persons have been afforded an opportunity to participate in the making of this amendment. Due consideration has been given to the comments received.

Support for the Proposed Rule

Two commenters support the proposed rule.

Requests To Revise Initial Inspection Method

Several commenters request that the FAA require, within 18 months, an ''external'' visual inspection for evidence of corrosion of the hinge plates with fairings removed. If corrosion is found during the ''external'' visual inspection, the commenters suggest that, prior to further flight, the one-time visual inspection specified in paragraph (a) of the proposed AD then be accomplished. If no corrosion is found during the ''external'' visual inspection, the commenters suggest that operators repeat the ''external'' visual inspection thereafter at intervals not to exceed 18 months, until the one-time visual inspection is accomplished within 6 years. The commenters state that because removing the pivot pin and horizontal stabilizer to conduct the proposed one-time visual inspection is very time consuming, it will cause an

undue burden on operators. One commenter states that it will have to special schedule its fleet of airplanes to accomplish the proposed visual inspection within 18 months. In addition, one commenter states that Boeing supports its inspection procedures and is prepared to revise McDonnell Douglas Service Bulletin MD80–55–054, dated March 3, 1998 (which was referenced in the proposed AD as the appropriate source of service information for accomplishment of the proposed actions).

The FAA concurs partially. The FAA acknowledges that the procedures recommended by the commenters could be developed and implemented by the manufacturer in a revised service bulletin. However, because a revised service bulletin does not exist at this time, the FAA finds that no change to the final rule is warranted. When the manufacturer does revise the existing service bulletin, the FAA may approve that service bulletin as an alternative method of compliance (AMOC) to the requirements of this final rule.

Request To Include a Provision for Certain Inspections Performed Previously

One commenter requests that the FAA revise the proposed AD to include a provision for inspections of Significant Structural Items (SSI) 55.11.053, 55.11.054, and 55.51.066 accomplished previously within the last 18 months. The commenter states that the subject hinge plates are inspected when SSI's are inspected. The FAA does not concur. The FAA finds that the SSI inspections proposed by the commenter do not adequately address the identified unsafe condition of this AD, because they are much less rigorous than the inspections required in this AD. However, under the provisions of paragraph (c) of the final rule, the FAA may approve requests for alternative methods of compliance if data are submitted to substantiate that such an alternative would provide an acceptable level of safety.

Request To Delay Issuance of Final Rule

One commenter requests that the Structural Repair Manual (SRM) be revised prior to issuance of the final rule. The commenter contends that the SRM does not provide procedures for any protective finish after corrosion removal is accomplished. The commenter suggests a protective finish of fluid-resistant primer. The FAA concurs. The FAA has verified with the manufacturer that a Temporary Revision to Chapter 55 of the SRM has been issued, which describes procedures for a protective finish of fluid-resistant primer after corrosion removal and deletes cadmium plating from the repair procedures. Accordingly, no change to the final rule is necessary.

Conclusion

After careful review of the available data, including the comments noted above, the FAA has determined that air safety and the public interest require the adoption of the rule as proposed.

Cost Impact

There are approximately 1,059 airplanes of the affected design in the worldwide fleet. The FAA estimates that 706 airplanes of U.S. registry will be affected by this AD. It will take approximately 117 work hours per airplane (which includes removal and installation) to accomplish the required inspection, at an average labor rate of $60 per work hour. Based on these figures, the cost impact of the AD on U.S. operators is estimated to be $4,956,120, or $7,020 per airplane.

The cost impact figure discussed above is based on assumptions that no operator has yet accomplished any of the requirements of this AD action, and that no operator would accomplish those actions in the future if this AD were not adopted.

Regulatory Impact

The regulations adopted herein will not have substantial direct effects on the States, on the relationship between the national government and the States, or on the distribution of power and responsibilities among the various levels of government. Therefore, in accordance with Executive Order 12612, it is determined that this final rule does not have sufficient federalism implications to warrant the preparation of a Federalism Assessment.

For the reasons discussed above, I certify that this action (1) is not a ''significant regulatory action'' under Executive Order 12866; (2) is not a ''significant rule'' under DOT Regulatory Policies and Procedures (44 FR 11034, February 26, 1979); and (3) will not have a significant economic impact, positive or negative, on a substantial number of small entities under the criteria of the Regulatory Flexibility Act. A final evaluation has been prepared for this action and it is contained in the Rules Docket. A copy of it may be obtained from the Rules Docket at the location provided under the caption **ADDRESSES.**

List of Subjects in 14 CFR Part 39

Air transportation, Aircraft, Aviation safety, Incorporation by reference, Safety.

Adoption of the Amendment

Accordingly, pursuant to the authority delegated to me by the Administrator, the Federal Aviation Administration amends part 39 of the Federal Aviation Regulations (14 CFR part 39) as follows:

PART 39—AIRWORTHINESS DIRECTIVES

1. The authority citation for part 39 continues to read as follows:

Authority: 49 U.S.C. 106(g), 40113, 44701.

§ 39.13 [Amended]

2. Section 39.13 is amended by adding the following new airworthiness directive:

99–07–14 McDonnell Douglas: Amendment 39–11099. Docket 98–NM–166–AD.

Applicability: Model DC–9–81 (MD–81), DC–9–82 (MD–82), DC–9–83 (MD–83), and DC–9–87 (MD–87) series airplanes, and Model MD–88 airplanes; as listed in McDonnell Douglas Service Bulletin MD80–55–054, dated March 3, 1998; certificated in any category.

Note 1: This AD applies to each airplane identified in the preceding applicability provision, regardless of whether it has been modified, altered, or repaired in the area subject to the requirements of this AD. For airplanes that have been modified, altered, or repaired so that the performance of the requirements of this AD is affected, the owner/operator must request approval for an alternative method of compliance in accordance with paragraph (c) of this AD. The request should include an assessment of the effect of the modification, alteration, or repair on the unsafe condition addressed by this AD; and, if the unsafe condition has not been eliminated, the request should include specific proposed actions to address it.

Compliance: Required as indicated, unless accomplished previously.

To detect and correct corrosion of the lug bores and the surface of the hinge plates of the vertical-to-horizontal stabilizer, which could result in reduced structural integrity of the airplane, accomplish the following:

(a) Within 18 months after the effective date of this AD, perform a one-time visual inspection to detect corrosion of the lug bores and the surface of the hinge plates of the vertical-to-horizontal stabilizer, in accordance with McDonnell Douglas Service Bulletin MD80–55–054, dated March 3, 1998.

(1) *Condition 1:* If no corrosion is detected, no further action is required by this paragraph.

(2) *Condition 2:* If any corrosion is detected that is within the limits specified in the Structural Repair Manual, prior to further flight, remove the corrosion in accordance with the service bulletin.

(3) *Condition 3:* If any corrosion is detected that exceeds the limits specified in the

Structural Repair Manual, prior to further flight, replace the hinge plates with new parts, in accordance with the service bulletin.

(b) Within 10 days after accomplishing the inspection required by paragraph (a) of this AD, or within 10 days after the effective date of this AD, whichever occurs later, submit a report of the inspection results (both positive and negative findings) to the Manager, Los Angeles Aircraft Certification Office (ACO), FAA, Transport Airplane Directorate, 3960 Paramount Boulevard, Lakewood, California 90712–4137; fax (562) 627–5210. Information collection requirements contained in this regulation have been approved by the Office of Management and Budget (OMB) under the provisions of the Paperwork Reduction Act of 1980 (44 U.S.C. 3501 *et seq.*) and have been assigned OMB Control Number 2120–0056.

(c) An alternative method of compliance or adjustment of the compliance time that provides an acceptable level of safety may be used if approved by the Manager, Los Angeles ACO. Operators shall submit their requests through an appropriate FAA Principal Maintenance Inspector, who may add comments and then send it to the Manager, Los Angeles ACO.

Note 2: Information concerning the existence of approved alternative methods of compliance with this AD, if any, may be obtained from the Los Angeles ACO.

(d) Special flight permits may be issued in accordance with sections 21.197 and 21.199 of the Federal Aviation Regulations (14 CFR 21.197 and 21.199) to operate the airplane to a location where the requirements of this AD can be accomplished.

(e) Except as provided by paragraph (b) of this AD, the actions shall be done in accordance with McDonnell Douglas Service Bulletin MD80–55–054, dated March 3, 1998. This incorporation by reference was approved by the Director of the Federal Register in accordance with 5 U.S.C. 552(a) and 1 CFR part 51. Copies may be obtained from Boeing Commercial Aircraft Group, Long Beach Division, 3855 Lakewood Boulevard, Long Beach, California 90846, Attention: Technical Publications Business Administration, Dept. C1-L51 (2–60). Copies may be inspected at the FAA, Transport Airplane Directorate, 1601 Lind Avenue, SW., Renton, Washington; or at the FAA, Transport Airplane Directorate, Los Angeles Aircraft Certification Office, 3960 Paramount Boulevard, Lakewood, California; or at the Office of the Federal Register, 800 North Capitol Street, NW., suite 700, Washington, DC.

(f) This amendment becomes effective on May 6, 1999.

Issued in Renton, Washington, on March 23, 1999.

Darrell M. Pederson,

Acting Manager, Transport Airplane Directorate, Aircraft Certification Service.

[FR Doc. 99–7691 Filed 3–31–99; 8:45 am]

BILLING CODE 4910–13–U

DEPARTMENT OF TRANSPORTATION

Federal Aviation Administration

14 CFR Part 39

[Docket No. 98–NM–219–AD; Amendment 39–11098; AD 99–07–13]

RIN 2120–AA64

Airworthiness Directives; Construcciones Aeronauticas, S.A. (CASA) Model CN–235 Series Airplanes

AGENCY: Federal Aviation Administration, DOT.

ACTION: Final rule.

SUMMARY: This amendment adopts a new airworthiness directive (AD), applicable to certain CASA Model CN–235 series airplanes. This amendment requires a one-time visual inspection to detect relative movement or deformation of the joint areas of the rear attaching supports and lower skin of the left and right outer flaps; repetitive borescopic inspections to detect cracking of the spar and of the rear internal support fittings of the outer flaps; and corrective actions, if necessary. This amendment also provides for optional terminating action for the repetitive inspections. This amendment is prompted by issuance of mandatory continuing airworthiness information by a foreign civil airworthiness authority. The actions specified by this AD are intended to detect and correct fatigue cracking of the rear internal support fittings of the outer flap structure, which could result in failure of the outer flaps, and consequent reduced controllability of the airplane.

DATES: Effective May 6, 1999.

The incorporation by reference of certain publications listed in the regulations is approved by the Director of the Federal Register as of May 6, 1999.

ADDRESSES: The service information referenced in this AD may be obtained from Construcciones Aeronauticas, S.A., Getafe, Madrid, Spain. This information may be examined at the Federal Aviation Administration (FAA), Transport Airplane Directorate, Rules Docket, 1601 Lind Avenue, SW., Renton, Washington; or at the Office of the Federal Register, 800 North Capitol Street, NW., suite 700, Washington, DC.

FOR FURTHER INFORMATION CONTACT: Norman B. Martenson, Manager, International Branch, ANM–116, FAA, Transport Airplane Directorate, 1601 Lind Avenue, SW., Renton, Washington 98055–4056; telephone (425) 227–2110; fax (425) 227–1149.

SUPPLEMENTARY INFORMATION: A proposal to amend part 39 of the Federal Aviation Regulations (14 CFR part 39) to include an airworthiness directive (AD) that is applicable to certain CASA Model CN–235 series airplanes was published in the **Federal Register** on January 20, 1999 (64 FR 3052). That action proposed to require a one-time visual inspection to detect relative movement or deformation of the joint areas of the rear attaching supports and lower skin of the left and right outer flaps; repetitive borescopic inspections to detect cracking of the spar and of the rear internal support fittings of the outer flaps; and corrective actions, if necessary. That action also proposed to provide for optional terminating action for the repetitive inspections.

Comments

Interested persons have been afforded an opportunity to participate in the making of this amendment. No comments were submitted in response to the proposal or the FAA's determination of the cost to the public.

Conclusion

The FAA has determined that air safety and the public interest require the adoption of the rule as proposed.

Cost Impact

The FAA estimates that 2 airplanes of U.S. registry will be affected by this AD, that it will take approximately 1 work hour per airplane to accomplish the required visual inspection, at an average labor rate of $60 per work hour. Based on these figures, the cost impact of the visual inspection required by this AD on U.S. operators is estimated to be $120, or $60 per airplane.

It will take approximately 4 work hours to accomplish the required borescopic inspection, at an average labor rate of $60 per work hour. Based on these figures, the cost impact of the borescopic inspection required by this AD on U.S. operators is estimated to be $480, or $240 per airplane, per inspection cycle.

The cost impact figures discussed above are based on assumptions that no operator has yet accomplished any of the requirements of this AD action, and that no operator would accomplish those actions in the future if this AD were not adopted.

Should an operator elect to accomplish the terminating action that is provided by this AD action, it would take approximately 30 work hours to accomplish, at an average labor rate of $60 per work hour. The cost of required

parts would be approximately $123,204 per airplane. Based on these figures, the cost impact of the optional terminating action would be $125,004 per airplane.

Regulatory Impact

The regulations adopted herein will not have substantial direct effects on the States, on the relationship between the national government and the States, or on the distribution of power and responsibilities among the various levels of government. Therefore, in accordance with Executive Order 12612, it is determined that this final rule does not have sufficient federalism implications to warrant the preparation of a Federalism Assessment.

For the reasons discussed above, I certify that this action (1) is not a ''significant regulatory action'' under Executive Order 12866; (2) is not a ''significant rule'' under DOT Regulatory Policies and Procedures (44 FR 11034, February 26, 1979); and (3) will not have a significant economic impact, positive or negative, on a substantial number of small entities under the criteria of the Regulatory Flexibility Act. A final evaluation has been prepared for this action and it is contained in the Rules Docket. A copy of it may be obtained from the Rules Docket at the location provided under the caption **ADDRESSES**.

List of Subjects in 14 CFR Part 39

Air transportation, Aircraft, Aviation safety, Incorporation by reference, Safety.

Adoption of the Amendment

Accordingly, pursuant to the authority delegated to me by the Administrator, the Federal Aviation Administration amends part 39 of the Federal Aviation Regulations (14 CFR part 39) as follows:

PART 39—AIRWORTHINESS DIRECTIVES

1. The authority citation for part 39 continues to read as follows:

Authority: 49 U.S.C. 106(g), 40113, 44701.

§ 39.13 [Amended]

2. Section 39.13 is amended by adding the following new airworthiness directive:

99–07–13 Construcciones Aeronauticas, S.A. (CASA): Amendment 39–11098. Docket 98–NM–219–AD.

Applicability: Model CN–235 series airplanes, as listed in CASA Service Bulletin SB–235–57–20, dated December 23, 1997; and Model CN–235 series airplanes having serial number C–011; certificated in any category.

Note 1: This AD applies to each airplane identified in the preceding applicability provision, regardless of whether it has been modified, altered, or repaired in the area subject to the requirements of this AD. For airplanes that have been modified, altered, or repaired so that the performance of the requirements of this AD is affected, the owner/operator must request approval for an alternative method of compliance in accordance with paragraph (e) of this AD. The request should include an assessment of the effect of the modification, alteration, or repair on the unsafe condition addressed by this AD; and, if the unsafe condition has not been eliminated, the request should include specific proposed actions to address it.

Compliance: Required as indicated, unless accomplished previously.

To detect and correct fatigue cracking of the rear internal support fittings of the outer flap structure, which could result in failure of the outer flaps, and consequent reduced controllability of the airplane, accomplish the following:

(a) Prior to the accumulation of 4,000 total landings, or within 30 days after the effective date of this AD, whichever occurs later, perform a one-time detailed visual inspection to detect relative movement or deformation of the joint areas of the rear attaching supports and lower skin of the left and right outer flaps, in accordance with CASA Maintenance Instructions COM 235–123, Revision 01, dated October 7, 1997.

(1) If no relative movement or deformation is detected: Within 300 landings, perform the requirements of paragraph (b) of this AD.

(2) If any relative movement or deformation is detected: Prior to further flight, perform the requirements of paragraph (b) of this AD.

(b) Remove the rear support attach bolts, one at a time, and perform a borescopic inspection to detect cracking of the spar and of the rear internal support fittings of the outer flaps, in accordance with CASA Maintenance Instructions COM 235–123, Revision 01, dated October 7, 1997.

(1) If no crack is detected, repeat the borescopic inspection thereafter at intervals not to exceed 600 landings until the replacement specified in paragraph (c) of this AD is accomplished.

(2) If any crack is detected, prior to further flight, replace the cracked outer flap with a new outer flap on which modified rear internal support fittings are installed, in accordance with CASA Service Bulletin SB–235–57–20, dated December 23, 1997. Such replacement constitutes terminating action for the repetitive borescopic inspection required by paragraph (b) of this AD for the replaced outer flap only.

(c) Accomplishment of the replacement specified in CASA Service Bulletin SB–235–57–20, dated December 23, 1997, constitutes terminating action for the repetitive borescopic inspections required by paragraph (b) of this AD.

(d) As of the effective date of this AD, no person shall install on any airplane an outer flap having part number 35–15501–00.

Alternative Methods of Compliance

(e) An alternative method of compliance or adjustment of the compliance time that provides an acceptable level of safety may be used if approved by the Manager, International Branch, ANM–116, FAA, Transport Airplane Directorate. Operators shall submit their requests through an appropriate FAA Principal Maintenance Inspector, who may add comments and then send it to the Manager, International Branch, ANM–116.

Note 2: Information concerning the existence of approved alternative methods of compliance with this AD, if any, may be obtained from the International Branch, ANM–116.

Special Flight Permits

(f) Special flight permits may be issued in accordance with sections 21.197 and 21.199 of the Federal Aviation Regulations (14 CFR 21.197 and 21.199) to operate the airplane to a location where the requirements of this AD can be accomplished.

Incorporation by Reference

(g) The inspections shall be done in accordance with CASA Maintenance

Instructions COM 235–123, Revision 01, dated October 7, 1997. The replacement, if accomplished, shall be done in accordance with CASA Service Bulletin SB–235–57–20, dated December 23, 1997, as applicable. This incorporation by reference was approved by the Director of the Federal Register in accordance with 5 U.S.C. 552(a) and 1 CFR part 51. Copies may be obtained from Construcciones Aeronauticas, S.A., Getafe, Madrid, Spain. Copies may be inspected at the FAA, Transport Airplane Directorate, 1601 Lind Avenue, SW., Renton, Washington; or at the Office of the Federal Register, 800 North Capitol Street, NW., suite 700, Washington, DC.

Note 3: The subject of this AD is addressed in Spanish airworthiness directive 01/97, dated March 19, 1997.

(h) This amendment becomes effective on May 6, 1999.

Issued in Renton, Washington, on March 23, 1999.

Darrell M. Pederson,

Acting Manager, Transport Airplane Directorate, Aircraft Certification Service.

[FR Doc. 99–7690 Filed 3–31–99; 8:45 am]

BILLING CODE 4910–13–U

DEPARTMENT OF TRANSPORTATION

Federal Aviation Administration

14 CFR Part 39

[Docket No. 98–SW–31–AD; Amendment 39–11101; AD 99–07–15]

RIN 2120–AA64

Airworthiness Directives; Bell Helicopter Textron, Inc.-manufactured Model HH–1K, SW204, SW204HP, SW205, SW205A–1, TH–1F, TH–1L, UH–1A, UH–1B, UH–1E, UH–1F, UH–1H, UH–1L, and UH–1P Helicopters

AGENCY: Federal Aviation Administration, DOT.

ACTION: Final rule; request for comments.

SUMMARY: This amendment adopts a new airworthiness directive (AD) that is applicable to Bell Helicopter Textron, Inc. (BHTI)-manufactured Model HH–1K, SW204, SW204HP, SW205, SW205A–1, TH–1F, TH–1L, UH–1A, UH–1B, UH–1E, UH–1F, UH–1H, UH–1L, and UH–1P helicopters. This action requires inspecting the tail rotor yoke (yoke) assembly historical records to determine if the affected yoke assembly has been involved in any incidents that may have induced a bending load. It further requires replacement of the yoke assembly with a yoke assembly that has been x-ray diffraction inspected or has zero hours time-in-service (TIS); installing and inspecting an airworthy flapping stop or trunnion assembly to detect excessive bending loads; and revising the applicable Rotorcraft Flight Manual. This amendment is prompted by in-flight failures of yokes installed on civilian and military helicopters of similar type design, including three reported accidents. The actions specified in this AD are intended to detect static or dynamic overload on the yoke due to external bending forces, which could result in failure of the yoke, loss of the tail rotor, and subsequent loss of control of the helicopter.

DATES: Effective May 3, 1999.

Comments for inclusion in the Rules Docket must be received on or before June 1, 1999.

ADDRESSES: Submit comments in triplicate to the Federal Aviation Administration (FAA), Office of the Regional Counsel, Southwest Region, Attention: Rules Docket No. 98–SW–31–AD, 2601 Meacham Blvd., Room 663, Fort Worth, Texas 76137.

FOR FURTHER INFORMATION CONTACT: Charles Harrison, Aerospace Engineer, FAA, Rotorcraft Directorate, Rotorcraft Standards Staff, 2601 Meacham Blvd., Fort Worth, Texas 76137, telephone (817) 222–5128, fax (817) 222–5961.

SUPPLEMENTARY INFORMATION: This amendment adopts a new AD that is applicable to BHTI-manufactured Model HH–1K, SW204, SW204HP, SW205, SW205A–1, TH–1F, TH–1L, UH–1A, UH–1B, UH–1E, UH–1F, UH–1H, UH–1L, and UH–1P helicopters. This action requires, before further flight, inspecting the yoke assembly historical records to determine if it has been involved in any incidents that may have induced a bending load in the yoke, and if so, immediately replacing the yoke assembly with a yoke assembly that has been x-ray diffraction inspected or has zero hours TIS as well as replacing the flapping stop or trunnion assembly. It further requires, within the next 180 calendar days, for yokes other than those that are required to be replaced before further flight, removing and replacing the yoke assembly with an airworthy assembly. This AD also requires inspection of the replaced trunnion assembly or flapping stop at intervals not to exceed 25 hours time-in-service (TIS), or before further flight, after any incident involving a hard landing, or any other incident involving excessive tail rotor flapping loads. Examples of bending loads include high wind gusts (such as those from prop blast), improper ground handling (in which the tail rotor blade has been used as a hand hold), improper feathering bearing removal (in which the yoke is not properly supported when pressing out bearings), or a static ground strike of some type (such as being struck by a vehicle). This amendment is prompted by reports of in-flight failures of yokes installed on civilian and military helicopters of similar type design, including 3 reported accidents. The actions specified in this AD are intended to detect static or dynamic overload on the yoke due to external bending forces, which could result in failure of the yoke, loss of the tail rotor, and subsequent loss of control of the helicopter.

Since an unsafe condition has been identified that is likely to exist or develop on other BHTI Model HH–1K, SW204, SW204HP, SW205, SW205A–1, TH–1F, TH–1L, UH–1A, UH–1B, UH–1E, UH–1F, UH–1H, UH–1L, and UH–1P helicopters of the same type design, this AD is being issued to detect static or dynamic overload on the yoke due to excessive bending forces, which could result in failure of the yoke, loss of the tail rotor, and subsequent loss of control of the helicopter. The short compliance time involved is required because the previously described critical unsafe condition can adversely affect the controllability and structural integrity of the helicopter tail rotor. Therefore, the actions contained in the AD are required prior to further flight, and this AD must be issued immediately.

Since a situation exists that requires the immediate adoption of this regulation, it is found that notice and opportunity for prior public comment hereon are impracticable, and that good cause exists for making this amendment effective in less than 30 days.

Cost Impact

The FAA estimates that 75 helicopters will be affected by this AD, that it will take approximately 9 work hours to accomplish the inspections and installations, and that the average labor rate is $60 per work hour. Required parts will cost approximately $6,637 per yoke, and $936 per flapping stop or $1,028 per trunnion. Based on these figures, the total cost impact of the AD on U.S. operators is estimated to be $608,475 to replace the yoke and flapping stop in the entire fleet, or $615,375 to replace the yoke and trunnion in the entire fleet.

Comments Invited

Although this action is in the form of a final rule that involves requirements affecting flight safety and, thus, was not preceded by notice and an opportunity for public comment, comments are invited on this rule. Interested persons are invited to comment on this rule by submitting such written data, views, or arguments as they may desire. Communications should identify the Rules Docket number and be submitted in triplicate to the address specified under the caption **ADDRESSES**. All communications received on or before the closing date for comments will be considered, and this rule may be amended in light of the comments received. Factual information that supports the commenter's ideas and suggestions is extremely helpful in evaluating the effectiveness of the AD action and determining whether additional rulemaking action would be needed.

Comments are specifically invited on the overall regulatory, economic, environmental, and energy aspects of the rule that might suggest a need to modify the rule. All comments submitted will be available, both before and after the closing date for comments, in the Rules Docket for examination by interested persons. A report that summarizes each FAA-public contact concerned with the substance of this AD will be filed in the Rules Docket

Commenters wishing the FAA to acknowledge receipt of their comments submitted in response to this rule must submit a self-addressed, stamped postcard on which the following statement is made: ''Comments to Docket No. 98–SW–31–AD.'' The postcard will be date stamped and returned to the commenter.

Regulatory Impact

The regulations adopted herein will not have substantial direct effects on the States, on the relationship between the national government and the States, or on the distribution of power and responsibilities among the various levels of government. Therefore, in accordance with Executive Order 12612, it is determined that this final rule does not have sufficient federalism implications to warrant the preparation of a Federalism Assessment.

The FAA has determined that this regulation is an emergency regulation that must be issued immediately to correct an unsafe condition in aircraft, and that it is not a ''significant regulatory action'' under Executive Order 12866. It has been determined further that this action involves an emergency regulation under DOT Regulatory Policies and Procedures (44 FR 11034, February 26, 1979). If it is determined that this emergency regulation otherwise would be significant under DOT Regulatory Policies and Procedures, a final regulatory evaluation will be prepared and placed in the Rules Docket. A copy of it, if filed, may be obtained from the Rules Docket at the location provided under the caption **ADDRESSES**.

List of Subjects in 14 CFR Part 39

Air transportation, Aircraft, Aviation safety, Safety.

Adoption of the Amendment

Accordingly, pursuant to the authority delegated to me by the Administrator, the Federal Aviation Administration amends part 39 of the Federal Aviation Regulations (14 CFR part 39) as follows:

PART 39—AIRWORTHINESS DIRECTIVES

1. The authority citation for part 39 continues to read as follows:

Authority: 49 U.S.C. 106(g), 40113, 44701.

§ 39.13 [Amended]

2. Section 39.13 is amended by adding a new airworthiness directive to read as follows:

AD. 99–07–15 California Department of Forestry; Firefly Aviation Helicopter Services (Previously Erickson Air-Crane); Garlick Helicopters; Hawkins & Powers Aviation, Inc.; International Helicopters, Inc.; Ranger Helicopter Services; Robinson Aircrane, Inc.; Scott Paper Co. (Formerly Off Shore); Smith Helicopters; Southern Helicopter, Inc.; Southwest Florida Aviation; Utah State University; UNC Helicopter Inc. (Formerly Williams Helicopter); US Helicopter, Inc.; and Western International Aviation Inc.: Amendment 39–11101. Docket No. 98–SW–31–AD. q

Applicability: Model HH–1K (Type Certificate Data Sheet (TCDS) H5NM), TH–1F (TCDS H12NM, and R0008AT), TH–1L (TCDS H5NM, H7SO, and H4NM), UH–1A (TCDS H3SO), UH–1B (TCDS H1RM, H3NM, H13WE, H3SO, H5SO, and R00012AT), UH–1E (TCDS H5NM, H7SO, H8NM, and H4NM), UH–1F (TCDS H2NM, H7NE, H11SW, H12NM, and R0008AT), UH–1H (TCDS H13WE, H3SO, and H15NM), UH–1L (TCDS H5NM, H7SO, and H4NM), UH–1P (TCDS H12NM, and R0008AT), and SW204 (TCDS H6SO), SW204HP (TCDS H6SO), SW205 (TCDS H6SO), and SW205A–1 (TCDS H6SO) helicopters, with tail rotor yoke, part number (P/N) 212–011–702-all dash numbers, P/N 212–010–704-all dash numbers, or P/N 212–010–744-all dash numbers, installed, certificated in any category.

Note 1: This AD applies to each helicopter identified in the preceding applicability provision, regardless of whether it has been otherwise modified, altered, or repaired in the area subject to the requirements of this AD. For helicopters that have been modified, altered, or repaired so that the performance of the requirements of this AD is affected, the owner/operator must request approval for an alternative method of compliance in accordance with paragraph (g) of this AD. The request should include an assessment of the effect of the modification, alteration, or repair on the unsafe condition addressed by this AD; and, if the unsafe condition has not been eliminated, the request should include specific proposed actions to address it. Compliance: Required as indicated, unless accomplished previously.

To detect static or dynamic overload on the tail rotor yoke (yoke) due to external bending forces, which could result in failure of the yoke, loss of the tail rotor, and subsequent loss of control of the helicopter, accomplish the following:

(a) Before further flight, review all historical records of the helicopter and the identified yoke assembly for any static or dynamic incident history that could have imposed an excessive bending load on the yoke. If such a history exists, before further flight, replace the yoke assembly with a yoke assembly specified in paragraph (c) and install the flapping stop or trunnion assembly as specified in paragraph (d).

Note 2: Examples of excessive bending loads include exposure to high wind gusts (such as those from rotor wash or prop blast), improper ground handling (in which the tail rotor blade has been used as a hand hold), improper feathering bearing removal (in which the yoke is not properly supported when pressing out bearings), or an incident in which a damaged tail rotor blade was replaced due to a static ground blade strike.

(b) Identify the trunnion assembly or flapping stop that is installed on the aircraft tail rotor assembly to determine if it is a flapping stop or trunnion and, if it is a flapping stop, to determine if the correct flapping stop is installed (see Figures 1 and 2).

Note 3: Helicopters with yoke assemblies, P/N 212–010–704-all dash numbers or P/N 212–010–744-all dash numbers, have trunnion assemblies installed that look similar. Trunnion assemblies, P/N 205–012–716–001 and P/N 212–010–703–001, are manufactured from machined material and do not have the proper characteristics to act as a yield indicators for the yoke assembly. When installed, these trunnion assemblies may be identified by the presence of a flanged bushing (split lines) at each bolt hole, readily visible externally when viewed inboard of the trunnion halves adjacent to each bearing. The trunnion assembly, P/N 212–010–738–001, is manufactured from a casting and does not incorporate bushings at the bolt locations. No bushing will be visible when viewing the assembled trunnion. Helicopters with yoke assemblies, P/N 212–011–702-all dash numbers, are assembled with a flapping stop configuration. The original flapping stop, P/N 212–011–713–001 has been redesigned. The redesigned flapping stop, P/N 212–011–713–103, will act as a yield indicator to provide visual verification of a yoke assembly that has been subjected to excessive out-of-plane bending loads (see Figure 5).

(c) Within the next 180 calendar days (for yokes not replaced immediately in accordance with paragraph (a) of this AD), remove the yoke assembly and replace it with an airworthy yoke assembly having zero hours time-in-service (TIS), or with an airworthy yoke assembly (regardless of TIS) that has passed an X-ray diffraction inspection in accordance with Part II of Bell Helicopter Textron, Inc. Alert Service Bulletin 212–96–100, Revision A, dated May 18, 1998.

(d) When the yoke assembly is replaced, for helicopters with a yoke assembly, P/N 212–011–702-all dash numbers, install an airworthy tail rotor flapping stop, P/N 212–011–713–103, and for helicopters with yoke assemblies, P/N 212–010–704-all dash numbers or P/N 212–010–744-all dash numbers, install an airworthy trunnion assembly, P/N 212–010–738–001. If any incident as described in paragraph (a) of this AD occurs after the effective date of this AD and prior to compliance with paragraph (c), then compliance with paragraphs (c) and (d) is required before further flight.

Note 4: Yoke assemblies that have passed an x-ray diffraction inspection at BHTI will have the letters ''FM'' vibro-etched on them following the serial number.

(e) After accomplishing the requirements of paragraphs (c) and (d) of this AD, thereafter,

at intervals not to exceed 25 hours TIS, or before further flight after any incident as described in paragraph (a) of this AD, inspect the trunnion assembly or flapping stop as follows:

(1) Gain access to the tail rotor assembly to allow close viewing of the inboard section of the trunnion assembly or flapping stop, whichever is installed. Perform a visual inspection of the inboard section of the trunnion assembly (see Figure 3) or the flapping stop (see Figure 4) for deformation. Inspect by gently placing the tail rotor yoke against one flapping stop or trunnion stop, allowing full view of the opposite stop. Repeat in opposite direction to allow viewing of the opposite stop.

(2) If either the trunnion stop or flapping stop is deformed or bent as shown in Figure 3 or Figure 4, the yoke assembly and trunnion stop or flapping stop are no longer serviceable and must be replaced with an airworthy yoke assembly that has zero hours TIS or has passed x-ray diffraction inspection, and an airworthy flapping stop or trunnion stop.

BILLING CODE 4910–13–P

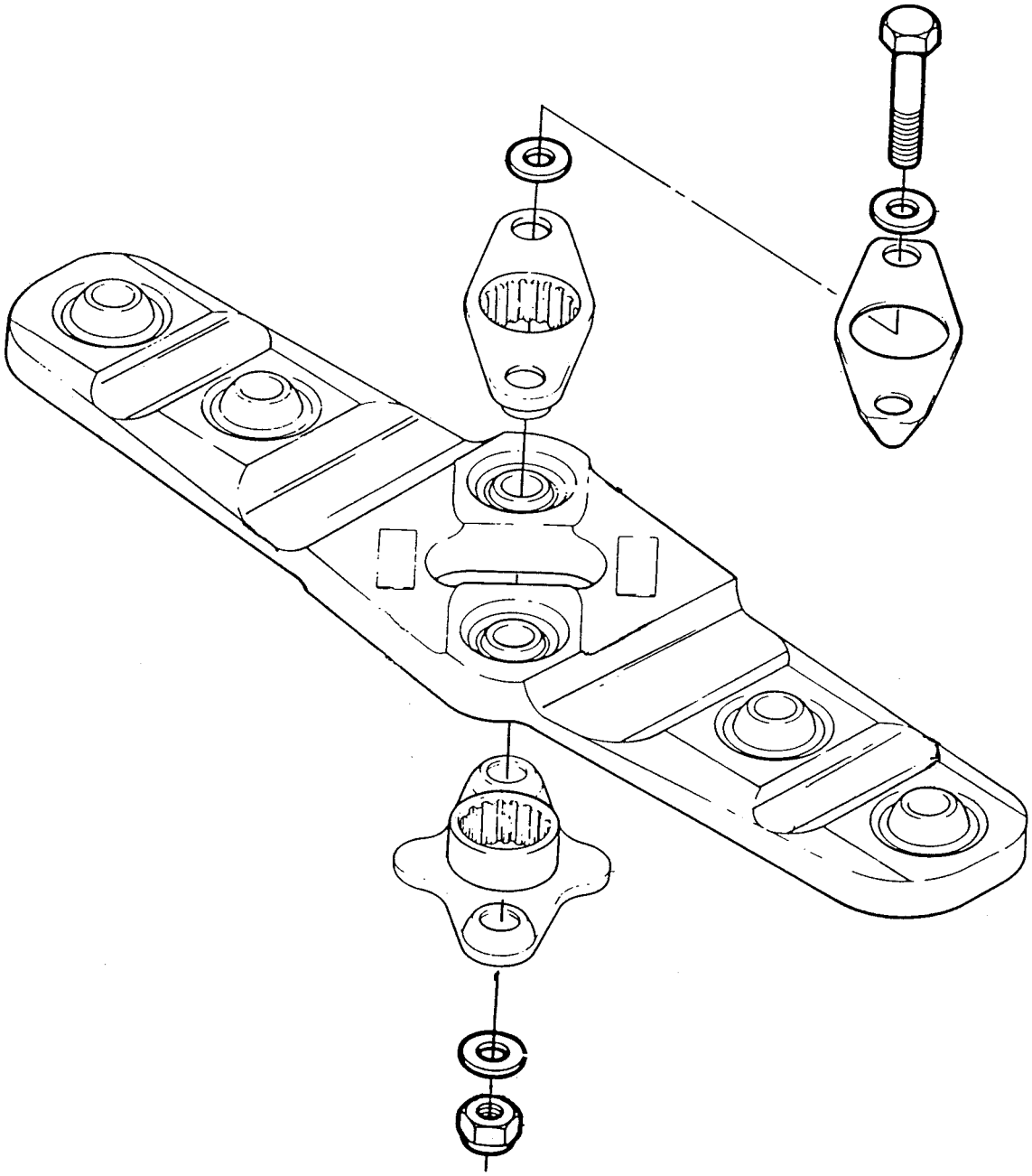

FIGURE 1. 212-010-704 and -744 Style Yoke Assy

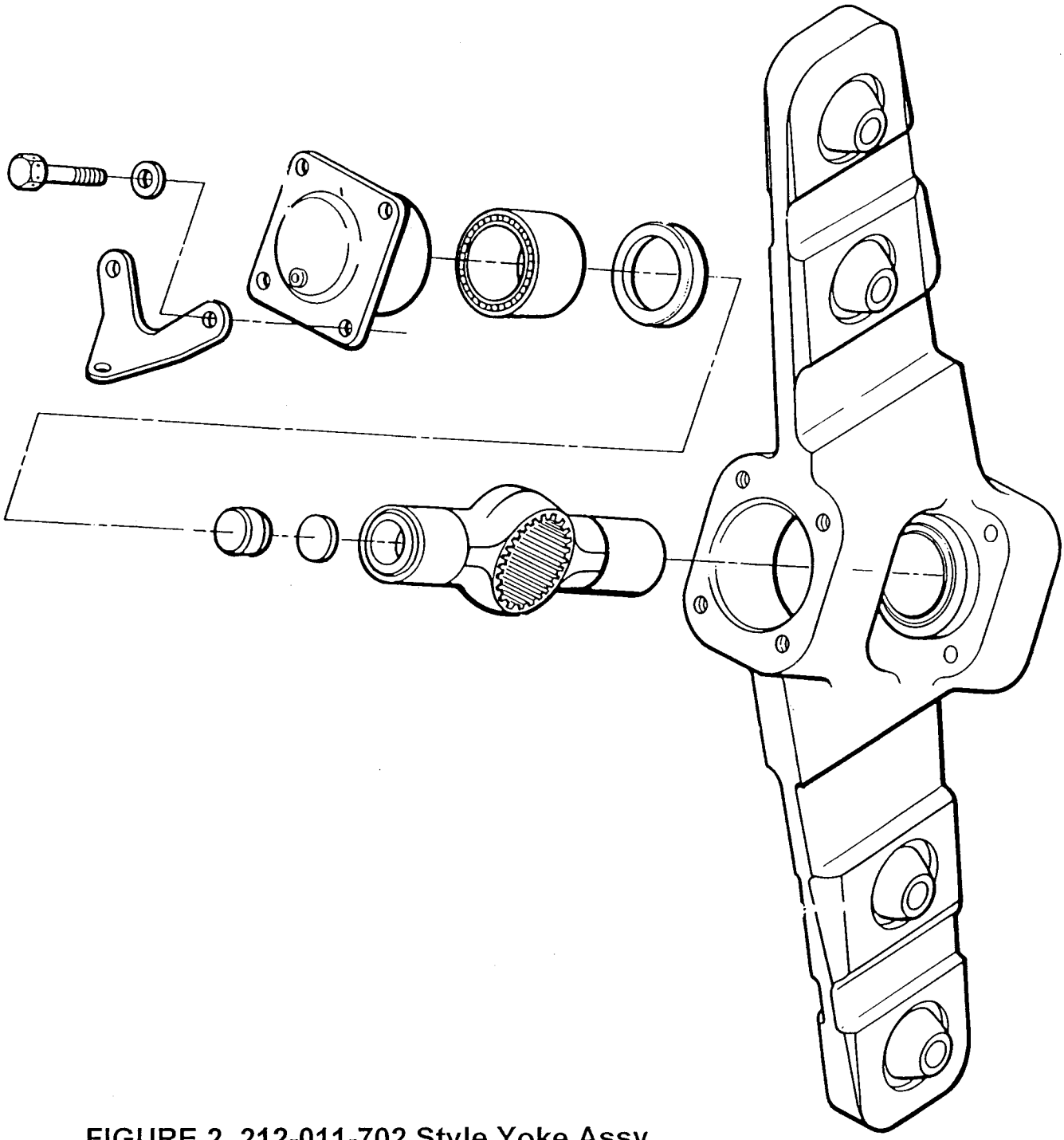

FIGURE 2. 212-011-702 Style Yoke Assy.

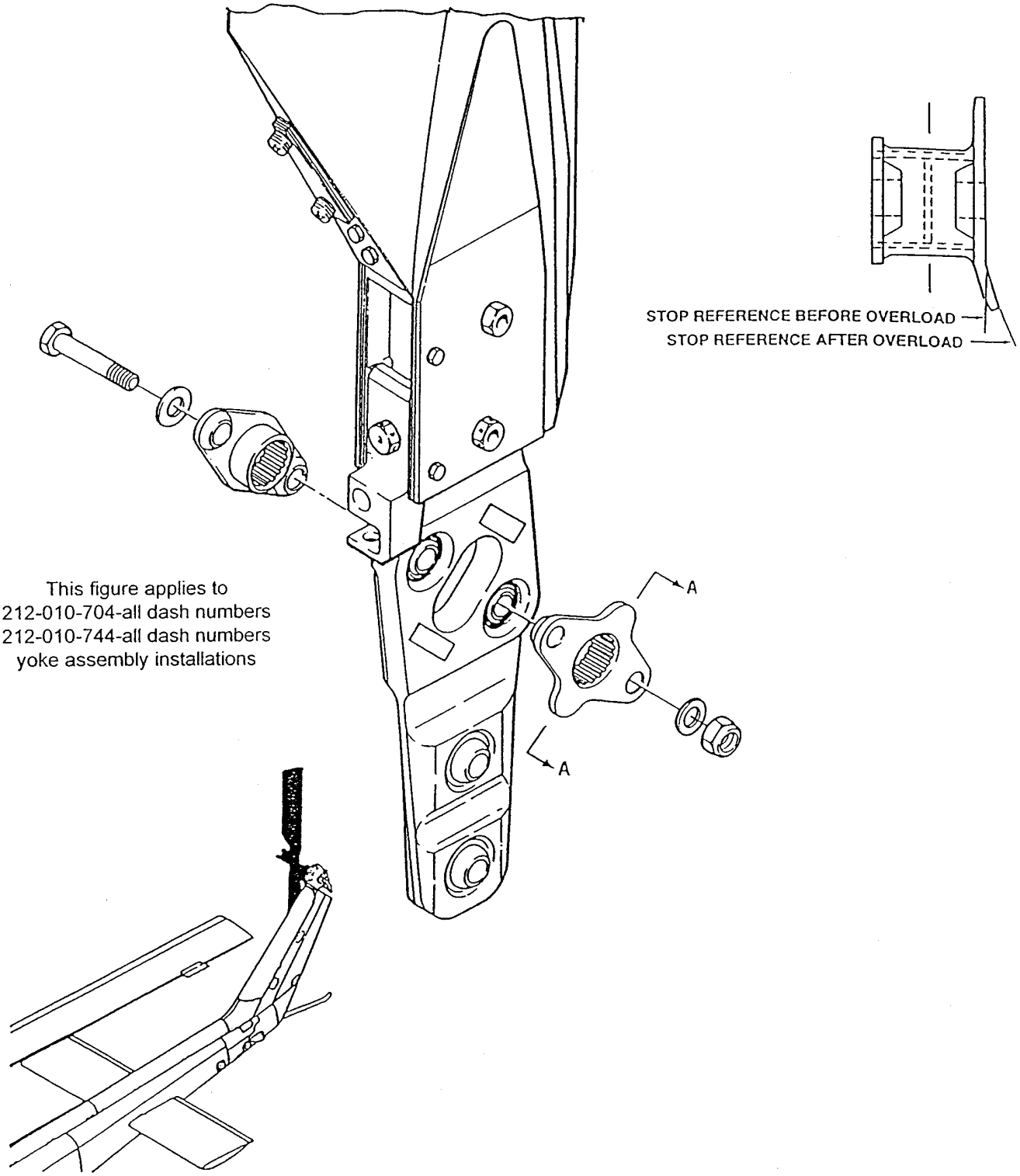

FIGURE 3. Inspection Criteria for 212-010-704 and -744 Style Yoke Assy.

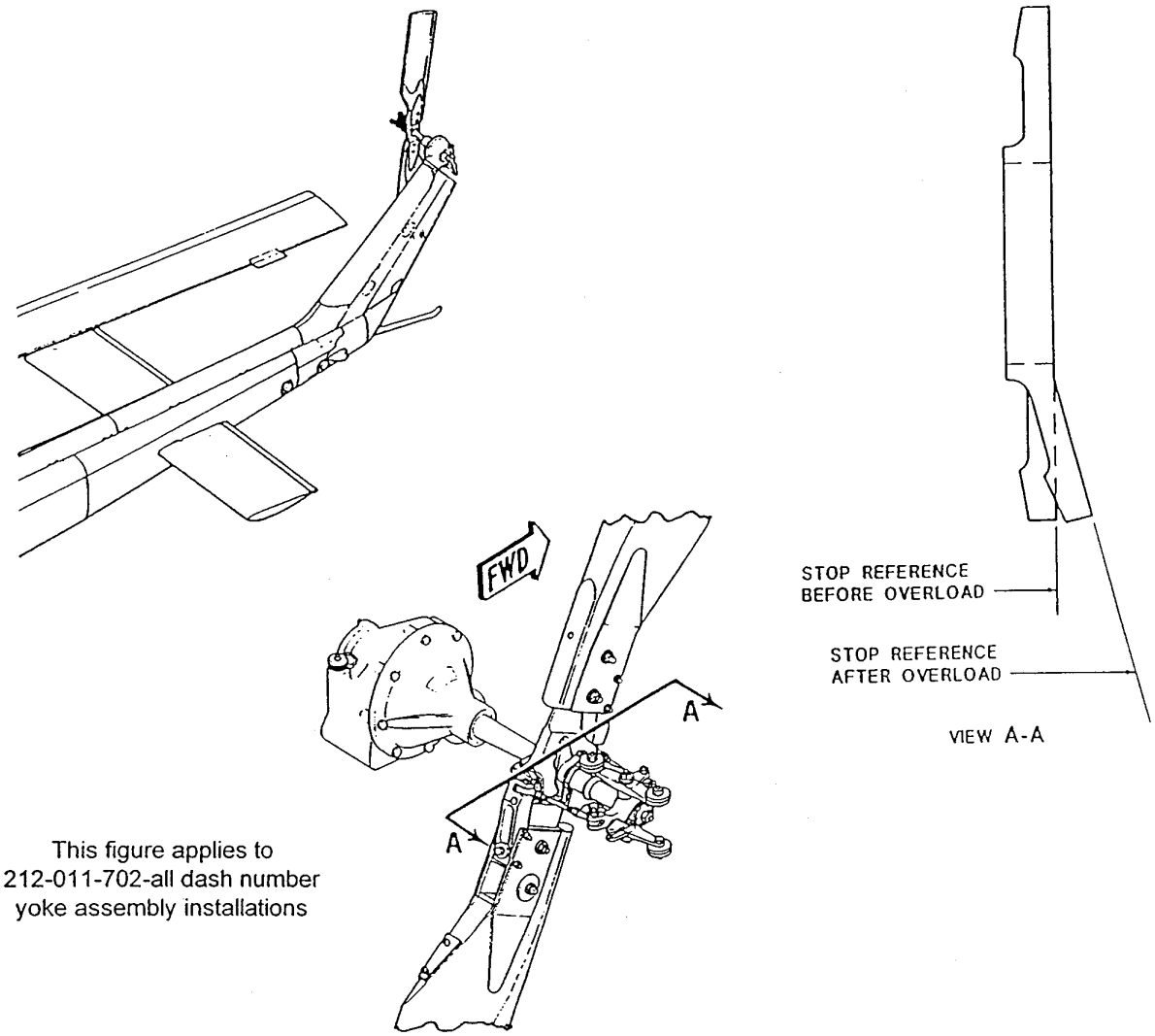

FIGURE 4. Inspection Criteria for 212-011-702 Style Yoke Assy.

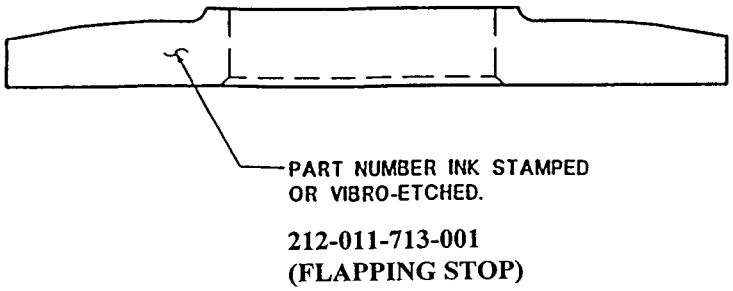

212-011-713-001
(FLAPPING STOP)

FLAPPING STOP
212-011-713-103

FIGURE 5. Flapping Stop Identification

BILLING CODE 4910–13–C

(f) Within 30 calendar days after the effective date of this AD, insert the following pen and ink changes under the Operating Procedures and Maneuvers Pre-Flight Checks section of the Rotorcraft Flight Manual or Operational Manual:

''Tail rotor yoke—Preflight visual check for static stop contact damage (deformed static stop or trunnion yield indicator).''

Note 5: Operators who use aircraft that have any of these affected yoke assemblies installed should use tail rotor tie downs when the aircraft is parked or stored.

(g) An alternative method of compliance or adjustment of the compliance time that provides an acceptable level of safety may be used if approved by the Manager, Rotorcraft Standards Staff, Rotorcraft Directorate, FAA. Operators shall submit their requests through an FAA Principal Maintenance Inspector, who may concur or comment and then send it to the Manager, Rotorcraft Standards Staff.

Note 6: Information concerning the existence of approved alternative methods of compliance with this AD, if any, may be obtained from the Rotorcraft Certification Office.

(h) Special flight permits may be issued in accordance with sections 21.197 and 21.199 of the Federal Aviation Regulations (14 CFR 21.197 and 21.199) to operate the helicopter to a location where the requirements of this AD can be accomplished.

(i) This amendment becomes effective on May 3, 1999.

Issued in Fort Worth, Texas, on March 23, 1999.

Mark R. Schilling,

Acting Manager, Rotorcraft Directorate, Aircraft Certification Service.

[FR Doc. 99–7778 Filed 3–31–99; 8:45 am]

BILLING CODE 4910–13–P

DEPARTMENT OF TRANSPORTATION

Federal Aviation Administration

14 CFR Part 39

[Docket No. 97–SW–60–AD; Amendment 39–11102; AD 99–07–16]

RIN 2120–AA64

Airworthiness Directives; Sikorsky Aircraft-manufactured Model CH–54A Helicopters

AGENCY: Federal Aviation Administration, DOT.

ACTION: Final rule.

SUMMARY: This amendment adopts a new airworthiness directive (AD), applicable to Sikorsky Aircraft-manufactured Model CH–54A helicopters, that requires an initial and recurring inspections and rework or replacement, if necessary, of the second stage lower planetary plate (plate). This amendment is prompted by cracked plates that have been found during overhaul and inspections. The actions specified by this AD are intended to prevent failure of the plate due to fatigue cracking, which could result in failure of the main gearbox, failure of the drive system, and subsequent loss of control of the helicopter.

EFFECTIVE DATE: May 6, 1999.

FOR FURTHER INFORMATION CONTACT: Uday Garadi, Aerospace Engineer, FAA, Rotorcraft Directorate, Rotorcraft Certification Office, Fort Worth, Texas 76193–0170, telephone (817) 222–5157, fax (817) 222–5959.

SUPPLEMENTARY INFORMATION: A proposal to amend part 39 of the Federal Aviation Regulations (14 CFR part 39) to include an airworthiness directive (AD) that is applicable to Sikorsky Aircraft-manufactured Model CH–54A helicopters was published in the **Federal Register** on February 10, 1998 (63 FR 6685). That action proposed to require an initial and recurring inspections and rework or replacement, if necessary, of the plate. It is believed that cracks on the plate, part number 6435–20229–102, initiate at and radiate from the lightening holes in the plate web due to fatigue.

Interested persons have been afforded an opportunity to participate in the making of this amendment. Due consideration has been given to the comment received.

The sole commenter states that the inclusion of an Erickson Air-Crane Company Service Bulletin (SB) in the Compliance Section of the AD should be removed. The commenter states that the FAA does not have the authority to utilize Erickson Air-Crane Company documentation for continued airworthiness of CH–54A model helicopters or any other helicopters other than Erickson Air-Crane S–64E helicopters. The FAA concurs with the comment to the extent that the Erickson Air-Crane SB only applies to the Erickson Air-Crane Company Model S–64E series helicopters. However, Note 2 of the Notice of Proposed Rulemaking (NPRM) only stated that the Erickson Air-Crane SB pertained to the same subject as is addressed by the FAA in this rule. It was not incorporated by reference into the compliance procedures proposed by the NPRM. However, to avoid any confusion as to the model applicability, the FAA has deleted proposed Note 2 relating to the Erickson Air-Crane Company SB because the note is unnecessary. Also, the wording of Note 1 has changed from that published in the NPRM.

After careful review of the available data, including the comment noted above, the FAA has determined that air safety and the public interest require the adoption of the rule with the changes described previously. The FAA has determined that these changes will neither increase the economic burden on any operator nor increase the scope of the AD.

The FAA estimates that 9 helicopters of U.S. registry will be affected by this AD, that it will take approximately 8 work hours per helicopter to accomplish the proposed inspections and 56 hours to remove and replace the plate, and that the average labor rate is $60 per work hour. Required parts will cost approximately $8,000 per helicopter. Based on these figures, the total cost impact of the proposed AD on U.S. operators is estimated to be $106,560; $4,320 to accomplish the inspections and rework, and $102,240 to replace the plate in the main gearbox assembly in all 9 helicopters, if necessary.

The regulations adopted herein will not have substantial direct effects on the States, on the relationship between the national government and the States, or on the distribution of power and responsibilities among the various levels of government. Therefore, in accordance with Executive Order 12612, it is determined that this final rule does not have sufficient federalism implications to warrant the preparation of a Federalism Assessment.

For the reasons discussed above, I certify that this action (1) is not a ''significant regulatory action'' under Executive Order 12866; (2) is not a ''significant rule'' under DOT Regulatory Policies and Procedures (44 FR 11034, February 26, 1979); and (3) will not have a significant economic impact, positive or negative, on a substantial number of small entities under the criteria of the Regulatory Flexibility Act. A final evaluation has been prepared for this action and it is contained in the Rules Docket. A copy of it may be obtained from the Rules Docket at the FAA, Office of the Regional Counsel, Southwest Region, 2601 Meacham Blvd., Room 663, Fort Worth, Texas.

List of Subjects in 14 CFR Part 39

Air transportation, Aircraft, Aviation safety, Safety.

Adoption of the Amendment

Accordingly, pursuant to the authority delegated to me by the Administrator, the Federal Aviation Administration amends part 39 of the Federal Aviation Regulations (14 CFR part 39) as follows:

PART 39—AIRWORTHINESS DIRECTIVES

1. The authority citation for part 39 continues to read as follows:

Authority: 49 U.S.C. 106(g), 40113, 44701.

§ 39.13 [Amended]

2. Section 39.13 is amended by adding a new airworthiness directive to read as follows:

AD 99–07–16 Columbia Helicopter; Heavy Lift; Silver Bay Logging: Amendment 39–11102. Docket No. 97–SW–60–AD.

Applicability: Model CH–54A helicopters with lower planetary plate, part number (P/N) 6435–20229–102, installed, certificated in any category.

Note 1: This AD applies to each helicopter identified in the preceding applicability provision, regardless of whether it has been otherwise modified, altered, or repaired in the area subject to the requirements of this AD. For helicopters that have been modified, altered, or repaired so that the performance of the requirements of this AD is affected, the owner/operator must request approval for an alternative method of compliance in accordance with paragraph (d) of this AD. The request should include an assessment of the effect of the modification, alteration, or repair on the unsafe condition addressed by this AD; and, if the unsafe condition has not been eliminated, the request should include specific proposed actions to address it.

Compliance: Required as indicated, unless accomplished previously.

To prevent failure of the second stage lower planetary plate (plate), P/N 6435–20229–102, due to fatigue cracking, which could lead to failure of the main gearbox, failure of the drive system, and subsequent loss of control of the helicopter, accomplish the following:

(a) On or before accumulating 1,300 hours time-in-service (TIS), conduct a fluorescent magnetic particle inspection of the plate, P/N 6435–20229–102, in the circumferential and longitudinal directions using the wet continuous method. Pay particular attention to the area around the 9 lightening holes.

(1) If any crack is discovered, replace the plate with an airworthy plate.

(2) If no crack is discovered, rework the plate as follows:

(i) Locate the center of each 1.750 inch-diameter lightening hole and machine holes 0.015 to 0.020 oversize on a side (0.030 to 0.040 diameter oversize). Machined surface roughness must not exceed 63 microinches AA rating (see Figure 1).

(ii) Radius each hole 0.030 to 0.050 inches on each edge as shown in Figure 1.

(iii) Mask the top and bottom surfaces of the plate to expose 3.20 inch minimum width circumferential band as shown in Figure 1.

(iv) Vapor blast or bead exposed surfaces to remove protective finish. Use 220 aluminum oxide grit at a pressure of 80 to 90 pounds per square inch.

(v) Shot peen exposed surfaces and inside and edges of lightening holes to 0.008–0.012A intensity. Use cast steel shot, size 170; 200 percent coverage is required. Use the tracer dye inspection method to ensure the required coverage. Also, visually inspect the shot peened surfaces for correct shot peen coverage. Inspect the intensity of the shot by performing an Almen strip height measurement.

(vi) Clean reworked surfaces using acetone. Touch up the reworked areas using Presto Black or an equivalent touchup solution. Ensure that the touchup solution is at a temperature between 70° F to 120° F during use. Keep the reworked surfaces wet with touchup solution for 3 minutes to obtain a uniform dark color. Rinse and dry the reworked areas.

(vii) Polish the reworked surfaces with a grade 00 or finer steel wool and polish with a soft cloth. Coat the reworked surfaces with preservative oil.

(viii) Identify the reworked plate by adding ''TS–107'' after the part number using a low-stress depth-controlled impression-stamp with a full fillet depth of not more than 0.003 inch (see Figure 1).

BILLING CODE 4910–13–P

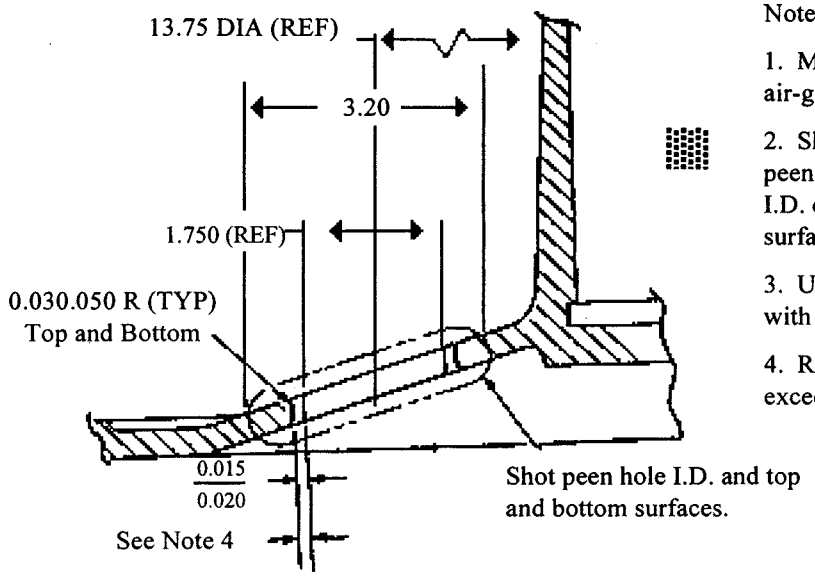

Notes:

1. Mask top and bottom areas to protect from liquid air-grit and shot peen.

2. Shaded area to be liquid air-grit blasted and shot peened includes plate top and bottom surfaces and I.D. of all lightening holes. Feather shot peened surface edges.

3. Use low-stress depth controlled impression-stamp with full fillet depth of no more than 0.003 inch.

4. Reworked machined surface roughness shall not exceed 63 microinches AA rating.

Section B-B

(Typical Nine Places)

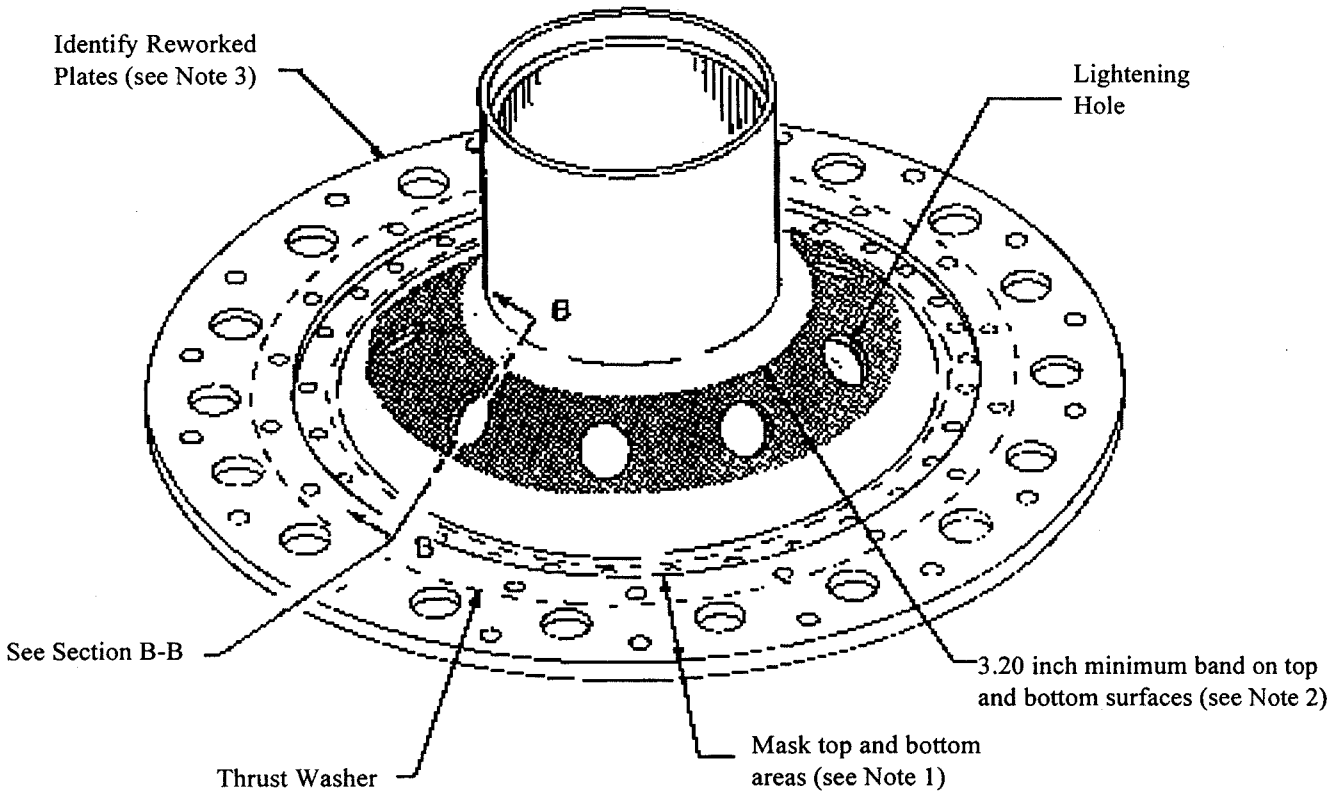

Rework of Second Stage
Lower Planetary Plate (6435-20229-102)
Figure 1

(b) For any plate, P/N 6435–20229–102, that has been reworked and identified with ''TS–107,'' on or before the accumulation of 1,500 hours TIS and thereafter at intervals not to exceed 70 hours TIS, accomplish the following:

(1) Inspect the plate for a crack in the area around all nine lightening holes using a Borescope or equivalent inspection method (see Figure 2).

(2) If a crack is found, replace the plate with an airworthy plate.

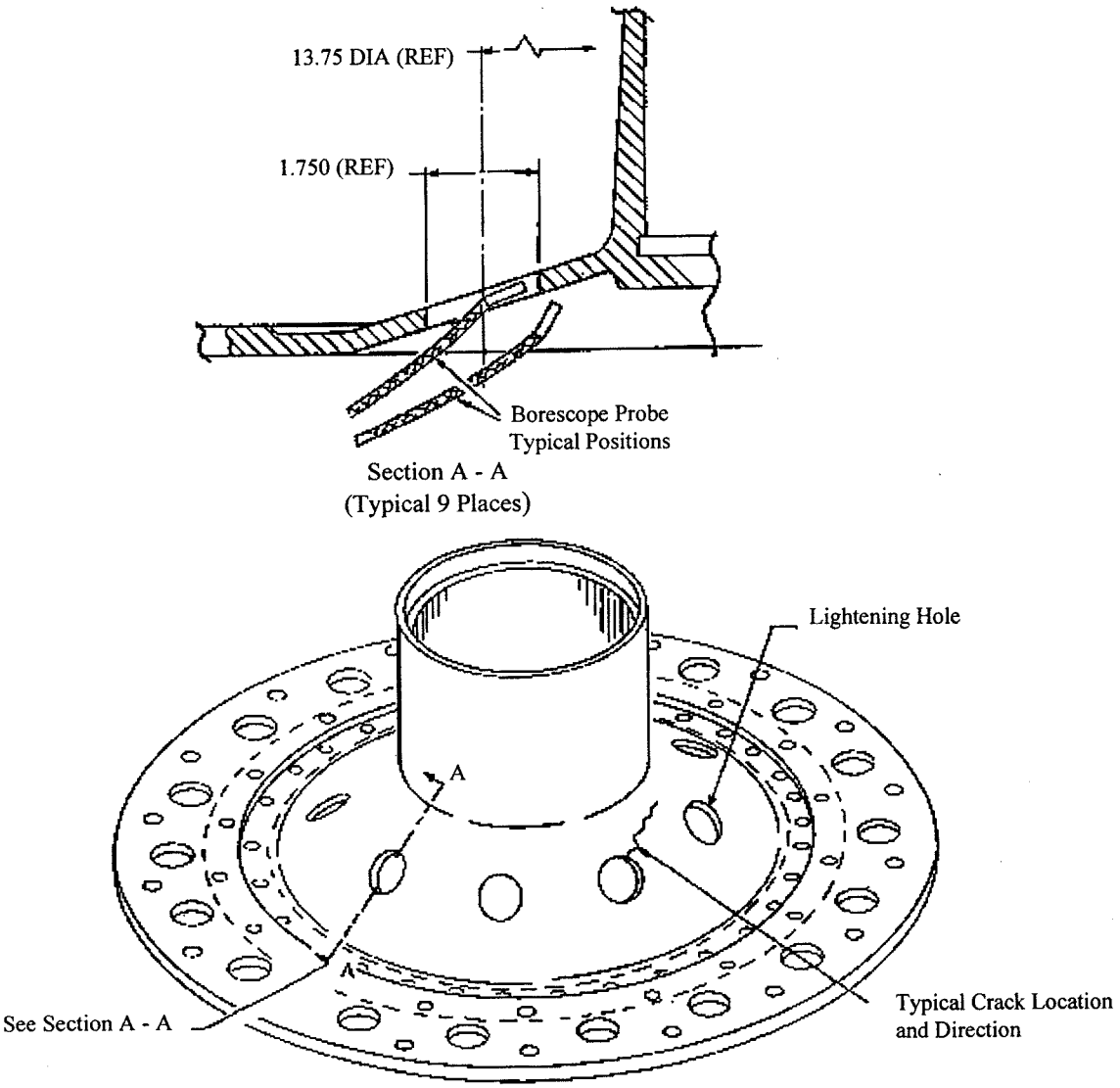

Borescope Inspection of
Second Stage Lower Planetary Plate
Figure 2

BILLING CODE 4910–13–C

(c) On or before the accumulation of 2,600 hours TIS, remove from service plates, P/N 6435–20229–102, reidentified as P/N 6435–20229–102–TS–107 after rework. This AD revises the airworthiness limitation section of the maintenance manual by establishing a retirement life of 2,600 hours TIS for the main gearbox assembly second stage lower planetary plate, P/N 6435–20229–102, reidentified as P/N 6435–20229–102–TS–107 after rework.

(d) An alternative method of compliance or adjustment of the compliance time that provides an acceptable level of safety may be used if approved by the Manager, Rotorcraft Certification Office, FAA, Rotorcraft Directorate. Operators shall submit their requests through an FAA Principal Maintenance Inspector, who may concur or comment and then send it to the Manager, Rotorcraft Certification Office.

Note 2: Information concerning the existence of approved alternative methods of compliance with this AD, if any, may be obtained from the Rotorcraft Certification Office.

(e) Special flight permits may be issued in accordance with sections 21.197 and 21.199 of the Federal Aviation Regulations (14 CFR 21.197 and 21.199) to operate the helicopter to a location where the requirements of this AD can be accomplished.

(f) This amendment becomes effective on May 6, 1999.

Issued in Fort Worth, Texas, on March 25, 1999.

Mark R. Schilling,

Acting Manager, Rotorcraft Directorate, Aircraft Certification Service.

[FR Doc. 99–7978 Filed 3–31–99; 8:45 am]

BILLING CODE 4910–13–P

DEPARTMENT OF TRANSPORTATION

Federal Aviation Administration

14 CFR Part 71

[Airspace Docket No. 99–ASW–07]

Revision of Class E Airspace; Shawnee, OK

AGENCY: Federal Aviation Administration, (FAA), DOT.

ACTION: Direct final rule; request for comments.

SUMMARY: This amendment revises the Class E airspace at Shawnee, OK. The development of a Global Positioning System (GPS) Standard Instrument Approach Procedure (SIAP), at Seminole Municipal Airport, Seminole, OK has made this rule necessary. This action is intended to provide adequate controlled airspace extending upward from 700 feet or more above the surface for Instrument Flight Rules (IFR) operations to Seminole Municipal Airport, Seminole, OK.

DATES: Effective 0901 UTC, September 9, 1999. Comments must be received on or before May 17, 1999.

ADDRESSES: Send comments on the rule in triplicate to Manager, Airspace Branch, Air Traffic Division, Federal Aviation Administration, Southwest Region, Docket No. 99–ASW–07, Fort Worth, TX 76193–0520.

The official docket may be examined in the Office of the Regional Counsel, Southwest Region, Federal Aviation Administration, 2601 Meacham Boulevard, Room 663, Fort Worth, TX, between 9:00 AM and 3:00 PM, Monday through Friday, except Federal holidays. An informal docket may also be examined during normal business hours at the Airspace Branch, Air Traffic Division, Federal Aviation Administration, Southwest Region, Room 414, Fort Worth, TX.

FOR FURTHER INFORMATION CONTACT: Donald J. Day, Airspace Branch, Air Traffic Division, Southwest Region, Federal Aviation Administration, Fort Worth, TX 76193–0520, telephone 817–222–5593.

SUPPLEMENTARY INFORMATION: This amendment to 14 CFR part 71 revises the Class E airspace at Shawnee, OK. The development of a GPS SIAP, at Seminole Municipal Airport, Seminole, OK has made this rule necessary. This action is intended to provide adequate controlled airspace extending upward from 700 feet or more above the surface for Instrument Flight Rules (IFR) operations to Seminole Municipal Airport, Seminole, OK.

Class E airspace designations are published in Paragraph 6005 of FAA Order 7400.9F, dated September 10, 1998, and effective September 16, 1998, which is incorporated by reference in 14 CFR 71.1. The Class E airspace designation listed in this document will be published subsequently in the order.

The Direct Final Rule Procedure

The FAA anticipates that this regulation will not result in adverse or negative comment and therefore is issuing it as a direct final rule. A substantial number of previous opportunities provided to the public to comment on substantially identical actions have resulted in negligible adverse comments or objections. Unless a written adverse or negative comment, or a written notice of intent to submit an adverse or negative comment is received within the comment period, the regulation will become effective on the date specified above. After the close of the comment period, the FAA will publish a document in the **Federal Register** indicating that no adverse or negative comments were received and confirming the date on which the final rule will become effective. If the FAA does receive, within the comment period, an adverse or negative comment, or written notice of intent to submit such a comment, a document withdrawing the direct final rule will be published in the **Federal Register**, and a notice of proposed rulemaking may be published with a new comment period.

Comments Invited

Although this action is in the form of a final rule and was not preceded by a notice of proposed rulemaking, comments are invited on this rule. Interested persons are invited to comment on this rule by submitting such written data, views, or arguments as they may desire. Communications should identify the Rules Docket number and be submitted in triplicate to the address specified under the caption **ADDRESSES**. All communications received on or before the closing date for comments will be considered, and this rule may be amended or withdrawn in light of the comments received. Factual information that supports the commenter's ideas and suggestions is extremely helpful in evaluating the effectiveness of this action and determining whether additional rulemaking action is needed.

Comments are specifically invited on the overall regulatory, economic, environmental, and energy aspects of the rule that might suggest a need to modify the rule. All comments submitted will be available, both before and after the closing date for comments, in the Rules Docket for examination by interested persons. A report that summarizes each FAA-public contact concerned with the substance of this action will be filed in the Rules Docket.

Commenters wishing the FAA to acknowledge receipt of their comments submitted in response to this rule must submit a self-addressed, stamped postcard on which the following statement is made: ''Comments to Docket No. 99–ASW–07.'' The postcard will be date stamped and returned to the commenter.

Agency Findings

The regulations adopted herein will not have substantial direct effects on the States, on the relationship between the national government and the States, or on the distribution of power and responsibilities among the various levels of government. Therefore, in accordance with Executive Order 12612, it is determined that this final rule does not have sufficient federalism

implications to warrant the preparation of a Federalism Assessment.

Further, the FAA has determined that this regulation is noncontroversial and unlikely to result in adverse or negative comments and only involves an established body of technical regulations that require frequent and routine amendments to keep them operationally current. Therefore, I certify that this regulation (1) is not a ''significant regulatory action'' under Executive Order 12866; (2) is not a ''significant rule'' under DOT Regulatory Policies and Procedures (44 FR 11034; February 26, 1979); and (3) if promulgated, will not have a significant economic impact, positive or negative, on a substantial number of small entities under the criteria of the Regulatory Flexibility Act. Since this rule involves routine matters that will only affect air traffic procedures and air navigation, it does not warrant preparation of a Regulatory Flexibility Analysis because the anticipated impact is so minimal.

List of Subjects in 14 CFR part 71

Airspace, Incorporation by reference, Navigation (air).

Adoption of the Amendment

Accordingly, pursuant to the authority delegated to me, the Federal Aviation Administration amends 14 CFR part 71 as follows:

PART 71—DESIGNATION OF CLASS A, CLASS B, CLASS C, CLASS D, AND CLASS E AIRSPACE AREAS; AIRWAYS; ROUTES; AND REPORTING POINTS

1. The authority citation for 14 CFR part 71 continues to read as follows:

Authority: 49 U.S.C. 106(g), 40103, 40113, 40120; E.O. 10854; 24 FR 9565, 3 CFR, 1959–1963 Comp., p. 389

§ 71.1 [Amended]

2. The incorporation by reference in 14 CFR 71.1 of the Federal Aviation Administration Order 7400.9F, *Airspace Designations and Reporting Points,* dated September 10, 1998, and effective September 16, 1998, is amended ad follows:

Paragraph 6005: Class E airspace areas extending upward from 700 feet or more above the surface of the earth.

* * * * *

ASW OK E5 Shawnee, OK [Revised]

Shawnee Municipal Airport, OK
(Lat 35°21′26″N., long. 96°56′34″W.)
Semiinole Municipal Airport, OK
(Lat. 35°16′29″N., long. 96°40′31″W.)
Prague Municipal Airport, OK
(Lat 35°28′55″N., long. 96°43′07″W.)
Prague NDB
(Lat. 35°31′00″N., long. 96°43′07″W.)
Chandler Municipal Airport, OK
(Lat. 35°43′26″N., long. 96°49′13″W.)
Tilghman NDB
(Lat. 35°43′20″N., long. 96°49′07″W.)
Cushing Municipal Airport, OK
(Lat. 35°57′00″N., long. 96°46′23″W.)
Cushing NDB
(Lat. 35°53′24″N., long. 96°46′31″W.)
Cushing Regional Hospital Heliport, OK
Point In Space Coordinates
(Lat. 35°57′58″N., long. 96°45′12″W.)

That airspace extending upward from 700 feet above the surface within a 7-mile radius of Shawnee Municipal Airport and within a 6.6-mile radius of Seminole Municipal Airport and within a 6.5-mile radius of Prague Municipal Airport and within 2 miles each side of the 360° bearing from the Prague NDB extending from the 6.5-mile radius to 8.9 miles north of the airport and within a 6.4-mile radius of Chandler Municipal Airport and within 2.5 miles each side of the 352° bearing from the Tilghman NDB extending from the 6.4-mile radius to 7.3 miles north of the airport and within a 6.5-mile radius of Cushing Municipal Airport and within 2.1 miles each side of the 185° bearing from the Cushing NDB extending from the 6.5-mile radius to 9.3 miles south of the airport and that airspace within a 6-mile radius of the Point In Space serving Cushing Regional Hospital Heliport.

* * * * *

Issued in Forth Worth, TX, on March 24, 1999.

Albert L. Viselli,

Acting Manager, Air Traffic Division, Southwest Region.

[FR Doc. 99–8021 Filed 3–31–99; 8:45 am]

BILLING CODE 4910–13–M

DEPARTMENT OF TRANSPORTATION

Federal Aviation Administration

14 CFR Part 71

[Airspace Docket No. 99–ASW–06]

Revision of Class E Airspace; Guthrie, OK

AGENCY: Federal Aviation Administration (FAA), DOT.

ACTION: Direct final rule; request for comments.

SUMMARY: This amendment revises Class E airspace at Guthrie, OK. The development of a global positioning system (GPS) standard instrument approach procedure (SIAP) to Guthrie Municipal Airport, Guthrie, OK has made this rule necessary. This action is intended to provide adequate controlled airspace extending upward from 700 feet or more above the surface for instrument flight rules (IFR) operations to Guthrie Municipal Airport, Guthrie, OK.

DATES: Effective 0901 UTC, July 15, 1999. Comments must be received on or before May 17, 1999.

ADDRESSES: Send comments on the rule in triplicate to Manager, Airspace Branch, Air Traffic Division,Federal Aviation Administration, Southwest Region, Docket No. 99–ASW–06, Fort Worth, TX 76193–0520.

The official docket may be examined in the Office of the Regional Counsel, Southwest Region, Federal Aviation Administration, 2601 Meacham Boulevard, Room 663, Fort Worth, TX, between 9:00 a.m. and 3:00 p.m., Monday through Friday, except Federal holidays. An informal docket may also be examined during normal business hours at the Airspace Branch, Air Traffic Division, Federal Aviation Administration, Southwest Region, Room 414, Fort Worth, TX.

FOR FURTHER INFORMATION CONTACT: Donald J. Day, Airspace Branch, Air Traffic Division, Southwest Region, Federal Aviation Administration, Fort Worth, TX 76193–0520, telephone 817–222–5593.

SUPPLEMENTARY INFORMATION: This amendment to 14 CFR part 71 revises the Class E airspace at Guthrie, OK. The development of a GPS SIAP at Guthrie Municipal Airport, Guthrie, OK has made this rule necessary. This action is intended to provide adequate controlled airspace extending upward from 700 feet or more about the surface for instrument flight rules (IFR) operations to Guthrie Municipal Airport, Guthrie, OK.

Class E airspace designations are published in Paragraph 6005 of FAA Order 7400.9F, dated September 10, 1998, and effective September 16, 1998, which is incorporated by reference in 14 CFR 71.1. The Class E airspace designation listed in this document will be published subsequently in the order.

The Direct Final Rule Procedure

The FAA anticipates that this regulation will not result in any adverse or negative comment and therefore is issuing it as a direct final rule. A substantial number of previous opportunities provided to the public to comment on substantially identical actions have resulted in negligible adverse comments or objections. Unless a written adverse or negative comment, or a written notice of intent to submit an adverse or negative comment, is received within the comment period, the regulation will become effective on the date specified above. After the close of the comment period, the FAA will publish a document in the **Federal Register** indicating that no adverse or

negative comments were received and confirming the date on which the final rule will become effective. If the FAA does receive, within the comment period, an adverse or negative comment or written notice of intent to submit such comment, a document withdrawing the direct final rule will be published in the **Federal Register,** and a notice of proposed rulemaking may be published with a new comment period.

Comments Invited

Although this action is in the form of a final rule and was not preceded by a notice of proposed rulemaking, comments are invited on this rule. Interested persons are invited to comment on this rule by submitting such written data, views, or arguments as they may desire. Communications should identify the Rules Docket number and be submitted in triplicate to the address specified under the caption **ADDRESSES**. All communications received on or before the closing date for comments will be considered, and this rule may be amended or withdrawn in light of the comments received. Factual information that supports the commenter's ideas and suggestions is extremely helpful in evaluating the effectiveness of this action and determining whether additional rulemaking action is needed.

Comments are specifically invited on the overall regulatory, economic, environmental, and energy aspects of the rule that might suggest a need to modify the rule. All comments submitted will be available, both before and after the closing date for comments, in the Rules Docket for examination by interested persons. A report that summarizes each FAA public contact concerned with the substance of this action will be filed in the Rules Docket.

Commenters wishing the FAA to acknowledge receipt of their comments submitted in response to this rule must submit a self-addressed, stamped postcard on which the following statement is made: ''Comments to Docket No. 99–ASW–06.'' The postcard will be date stamped and returned to the commenter.

Agency Findings

The regulations adopted herein will not have substantial direct effects on the states, on the relationship between the national government and the states, or on the distribution of power and responsibilities among the various levels of government. Therefore, in accordance with Executive Order 12612, it is determined that this final rule does not have sufficient federalism implications to warrant the preparation of a Federal Assessment.

Further, the FAA has determined that this regulation is noncontroversial and unlikely to result in adverse or negative comments and only involves and established body of technical regulations that require frequent and routine amendments to keep them operationally current. Therefore, I certify that this regulation (1) is not a ''significant regulatory action'' under Executive Order 12866; (2) is not a ''significant rule'' under DOT Regulatory Policies and Procedures (44 FR 11034; February 26, 1979); and (3) if promulgated, will not have a significant economic impact, positive or negative, on a substantial number of small entities under the criteria of the Regulatory Flexibility Act. Since this rule involves routine matters that will only affect air traffic procedures and air navigation, it does not warrant preparation of a Regulatory Flexibility Analysis because the anticipated impact is so minimal.

List of Subjects in 14 CFR Part 71

Airspace, Incorporation by reference, Navigation (air).

Adoption of the Amendment

Accordingly, pursuant to the authority delegated to me, The Federal Aviation Administration amends 14 CFR part 71 as follows:

PART 71—DESIGNATION OF CLASS A, CLASS B, CLASS C, CLASS D, AND CLASS E AIRSPACE AREAS; AIRWAYS; ROUTES; AND REPORTING POINTS

1. The authority citation for 14 CFR part 71 continues to read as follows:

Authority: 49 U.S.C. 106(g), 40103, 40113, 40120; E.O. 10854; 24 FR 9565, 3 CFR, 1959–1963 Comp., p. 389.

§ 71.1 [Amended]

2. The incorporation by reference in 14 CFR 71.1 of the Federal Aviation Administration Order 7400.9F, *Airspace Designations and Reporting Points,* dated September 10, 1998, and effective September 16, 1998, is amended as follows:

Paragraph 6005 Class E airspace areas extending upward from 700 feet or more above the surface of the earth.

* * * * *

ASW OK E5 Guthrie, OK [Revised]

Guthrie Municipal Airport, OK
(Lat. 35°50′59″ N., long. 97°24′56″ W.)
Logan County NDB
(Lat. 35°50′44″ N., long. 97°24′57″ W.)

That airspace extending upward from 700 feet above the surface within a 6.4-mile radius of Guthrie Municipal Airport and within 8 miles east and 4 miles west of the 348° bearing from the Logan County NDB extending from the 6.4-mile radius to 16 miles north of the NDB

* * * * *

Issued in Fort Worth, TX, on March 24, 1999.

Albert L. Viselli,

Acting Manager, Air Traffic Division, Southwest Region.

[FR Doc. 99–8020 Filed 3–31–99; 8:45 am]

BILLING CODE 4910–13–M

DEPARTMENT OF TRANSPORTATION

Federal Aviation Administration

14 CFR Part 71

[Airspace Docket No. 99–ASW–05]

Establishment of Class E Airspace; Escobas, TX

AGENCY: Federal Aviation Administration (FAA), DOT.

ACTION: Direct final rule; request for comments.

SUMMARY: This amendment establishes Class E airspace at Escobas, TX. The development of two global positioning system (GPS) standard instrument approach procedures (SIAP), to Zachry Ranch, Escobas, TX, has made this rule necessary. This action is intended to provide adequate controlled airspace extending upward from 700 feet or more above the surface for instrument flight rules (IFR) operations to Zachry Ranch, Escobas, TX.

DATES: Effective 0901 UTC, July 15, 1999. Comments must be received on or before May 17, 1999.

ADDRESSES: Send comments on the rule in triplicate to Manager, Airspace Branch, Air Traffic Division, Federal Aviation Administration, Southwest Region, Docket No. 99–ASW–05, Fort Worth, TX 76193–0520.

The official docket may be examined in the Office of the Regional Counsel, Southwest Region, Federal Aviation Administration, 2601 Meacham Boulevard, Room 663, Fort Worth, TX, between 9:00 a.m. and 3:00 p.m., Monday through Friday, except Federal holidays. An informal docket may also be examined during normal business hours at the Airspace Branch, Air Traffic Division, Federal Aviation Administration, Southwest Region, Room 414, Fort Worth, TX.

FOR FURTHER INFORMATION CONTACT: Donald J. Day, Airspace Branch, Air Traffic Division, Southwest Region, Federal Aviation Administration, Fort Worth, TX 76193–0520, telephone 817–222–5593.

SUPPLEMENTARY INFORMATION: This amendment to 14 CFR part 71 establishes Class E airspace at Escobas, TX. The development of two GPS SIAP's, to Zachry Ranch, Escobas, TX, has made this rule necessary. This action is intended to provide adequate controlled airspace extending upward from 700 feet or more above the surface for IFR operations to Zachry Ranch, Escobas, TX.

Class E airspace designations are published in Paragraph 6005 of FAA Order 7400.9F, dated September 10, 1998, and effective September 16, 1998, which is incorporated by reference in 14 CFR 71.1. The Class E airspace designation listed in this document will be published subsequently in the order.

The Direct Final Rule Procedure

The FAA anticipates that this regulation will not result in any adverse or negative comment and therefore is issuing it as a direct final rule. A substantial number of previous opportunities provided to the public to comment on substantially identical actions have resulted in negligible adverse comments or objections. Unless a written adverse or negative comment, or a written notice of intent to submit an adverse or negative comment, is received within the comment period, the regulation will become effective on the date specified above. After the close of the comment period, the FAA will publish a document in the **Federal Register** indicating that no adverse or negative comments were received and confirming the date on which the final rule will become effective. If the FAA does receive, within the comment period, an adverse or negative comment or written notice of intent to submit such a comment, a document withdrawing the direct final rule will be published in the **Federal Register**, and a notice of proposed rulemaking may be published with a new comment period.

Comments Invited

Although this action is in the form of a final rule and was not preceded by a notice of proposed rulemaking, comments are invited on this rule. Interested persons are invited to comment on this rule by submitting such written data, views, or arguments as they may desire. Communications should identify the Rules Docket number and be submitted in triplicate to the address specified under the caption **ADDRESSES.** All communications received on or before the closing date for comments will be considered, and this rule may be amended or withdrawn in light of the comments received. Factual information that supports the commenter's ideas and suggestions is extremely helpful in evaluating the effectiveness of this action and determining whether additional rulemaking action is needed.

Comments are specifically invited on the overall regulatory, economic, environmental, and energy aspects of the rule that might suggest a need to modify the rule. All comments submitted will be available, both before and after the closing date for comments, in the Rules Docket for examination by interested persons. A report that summarizes each FAA public contact concerned with the substance of this action will be filed in the Rules Docket.

Commenters wishing the FAA to acknowledge receipt of their comments submitted in response to this rule must submit a self-addressed, stamped postcard on which the following statement is made: ''Comments to Docket No. 99–ASW–05.'' The postcard will be date stamped and returned to the commenter.

Agency Findings

The regulations adopted herein will not have substantial direct effects on the states, on the relationship between the national government and the states, or on the distribution of power and responsibilities among the various levels of government. Therefore, in accordance with Executive Order 12612, it is determined that this final rule does not have sufficient federalism implications to warrant the preparation of a Federalism Assessment.

Further, the FAA has determined that this regulation is noncontroversial and unlikely to result in adverse or negative comments and only involves an established body of technical regulations that require frequent and routine amendments to keep them operationally current. Therefore, I certify that this regulation (1) is not a ''significant regulatory action'' under Executive Order 12866; (2) is not a ''significant rule'' under DOT Regulatory Policies and Procedures (44 FR 11034; February 26, 1979); and (3) if promulgated, will not have a significant economic impact, positive or negative, on a substantial number of small entities under the criteria of the Regulatory Flexibility Act. Since this rule involves routine matters that will only affect air traffic procedures and air navigation, it does not warrant preparation of a Regulatory Flexibility Analysis because the anticipated impact is so minimal.

List of Subjects in 14 CFR Part 71

Airspace, Incorporation by reference, Navigation (air).

Adoption of the Amendment

Accordingly, pursuant to the authority delegated to me, the Federal Aviation Administration amends 14 CFR part 71 as follows:

PART 71—DESIGNATION OF CLASS A, CLASS B, CLASS C, CLASS D, AND CLASS E AIRSPACE AREAS; AIRWAYS; ROUTES; AND REPORTING POINTS

1. The authority citation for 14 CFR part 71 continues to read as follow:

Authority: 49 U.S.C. 106(g), 40103, 40113, 40120; E.O. 10854; 24 FR 9565, 3 CFR, 1959–1963 Comp., p. 389.

§ 71.1 [Amended]

2. The incorporation by reference in 14 CFR 71.1 of the Federal Aviation Administration Order 7400.9F, *Airspace Designations and Reporting Points*, dated September 10, 1998, and effective September 16, 1998, is amended as follows:

Paragraph 6005 CLass E airspace areas extending upward from 700 feet or more above the surface of the earth.

* * * * *

ASW TX E5 Escobas, TX [New]

Zachry Ranch, TX
(Lat. 27°04′21″N., long. 98°56′19″W.)

That airspace extending upward from 700 feet above the surface within a 6.4-mile radius of Zachry Ranch and within 1.3 miles each side of the 322° bearing from the airport extending from the 6.4-mile radius to 9.0 miles northwest of the airport.

* * * * *

Issued in Fort Worth, TX, on March 24, 1999.

Albert L. Viselli,

Acting Manager, Air Traffic Division, Southwest Region.

[FR Doc. 99–8019 Filed 3–31–99; 8:45 am]

BILLING CODE 4910–13–M

DEPARTMENT OF TRANSPORTATION

Federal Aviation Administration

14 CFR Part 71

[Airspace Docket No. 99–ASW–04]

Revision of Class E Airspace; Lake Charles, LA

AGENCY: Federal Aviation Administration (FAA), DOT.

ACTION: Direct final rule; request for comments.

SUMMARY: This amendment revises Class E airspace at Lake Charles, LA. The development of a global positioning system (GPS) standard instrument approach procedure (SIAP) to

Chennault International Airport, Lake Charles, LA has made this rule necessary. This action is intended to provide adequate controlled airspace extending upward from 700 feet or more above the surface for instrument flight rules (IFR) operations to Chennault International Airport, Lake Charles, LA.

DATES: Effective 0901 UTC, July 15, 1999. Comment must be received on or before May 17, 1999.

ADDRESSES: Send comments on the rule in triplicate to Manager, Airspace Branch, Air Traffic Division, Federal Aviation Administration, Southwest Region, Docket No. 99–ASW–04, Fort Worth, TX 76193–0520. The official docket may be examined in the Office of the Regional Counsel, Southwest Region, Federal Aviation Administration, 2601 Meacham Boulevard, Room 663, Fort Worth, TX, between 9:00 a.m. and 3:00 p.m., Monday through Friday, except Federal holidays. An informal docket may also be examined during normal business hours at the Airspace Branch, Air Traffic Division, Federal Aviation Administration, Southwest Region, Room 414, Fort Worth, TX.

FOR FURTHER INFORMATION CONTACT: Donald J. Day, Airspace Branch, Air Traffic Division, Southwest Region, Federal Aviation Administration, Fort Worth, TX 76193–0520, telephone 817–222–5593.

SUPPLEMENTARY INFORMATION: This amendment to 14 CFR part 71 revises the Class E airspace at Lake Charles, LA. The development of a GPS SIAP at Chennault International Airport, Lake Charles, LA has made this rule necessary. This action is intended to provide adequate controlled airspace extending upward from 700 feet or more above the surface for instrument flight rules (IFR) operations to Chennault International Airport, Lake Charles, LA.

Class E airspace designations are published in Paragraph 6005 of FAA Order 7400.9F, dated September 10, 1998, and effective September 16, 1998, which is incorporated by reference in 14 CFR 71.1. The Class E airspace designation listed in this document will be published subsequently in the order.

The Direct Final Rule Procedure

The FAA anticipates that this regulation will not result in any adverse or negative comment and therefore is issuing it as a direct final rule. A substantial number of previous opportunities provided to the public to comment on substantially identical actions have resulted in negligible adverse comments or objections. Unless a written adverse or negative comment, or a written notice of intent to submit an adverse or negative comment, is received within the comment period, the regulation will become effective on the date specified above. After the close of the comment period, the FAA will publish a document in the **Federal Register** indicating that no adverse or negative comments were received and confirming the date on which the final rule will become effective. If the FAA does receive, within the comment period, and adverse or negative comment or written notice of intent to submit such a comment, a document withdrawing the direct final rule will be published in the **Federal Register,** and a notice of proposed rulemaking may be published with a new comment period.

Comment Invited

Although this action is in the form of a final rule and was not preceded by a notice of proposed rulemaking, comments are invited on this rule. Interested persons are invited to comment on this rule by submitting such written data, views, or arguments as they may desire. Communications should identify the Rules Docket number and be submitted in triplicate to the address specified under the caption **ADDRESSES**. All communications received on or before the closing date for comments will be considered, and this rule may be amended or withdrawn in light of the comments received. Factual information that supports the commenter's ideas and suggestions is extremely helpful in evaluating the effectiveness of this action and determining whether additional rulemaking action is needed.

Comments are specifically invited on the overall regulatory, economic, environmental, and energy aspects of the rule that might suggest a need to modify the rule. All comments submitted will be available, both before and after the closing date for comments, in the Rules Docket for examination by interested persons. A report that summarizes each FAA public contact concerned with the substance of this action will be filed in the Rules Docket.

Commenters wishing the FAA to acknowledge receipt of their comments submitted in response to this rule must submit a self-addressed, stamped postcard on which the following statement is made: ''Comments to Docket No. 99–ASW–04.'' The postcard will be date stamped and returned to the commenter.

Agency Findings

The regulations adopted herein will not have substantial direct effects on the states, on the relationship between the national government and the states, or on the distribution of power and responsibilities among the various levels of government. Therefore, in accordance with Executive Order 12612, it is determined that this final rule does not have sufficient federalism implications to warrant the preparation of a Federalism Assessment.

Further, the FAA has determined that this regulation is noncontroversial and unlikely to result in adverse or negative comments and only involves an established body of technical regulations that require frequent and routine amendments to keep them operationally current. Therefore, I certify that this regulation (1) is not a ''significant regulatory action'' under Executive Order 12866; (2) is not a ''significant rule'' under DOT Regulatory Policies and Procedures (44 FR 11034; February 26, 1979); and (3) if promulgated, will not have a significant economic impact, positive or negative, on a substantial number of small entities under the criteria of the Regulatory Flexibility Act. Since this rule involves routine matters that will only affect air traffic procedures and air navigation, it does not warrant preparation of a Regulatory Flexibility Analysis because the anticipated impact is so minimal.

List of Subjects in 14 CFR Part 71

Airspace, Incorporation by reference, Navigation (air).

Adoption of the Amendment

Accordingly, pursuant to the authority delegated to me, the Federal Aviation Administration amends 14 CFR part 71 as follows:

PART 71—DESIGNATION OF CLASS A, CLASS B, CLASS C, CLASS D, AND CLASS E AIRSPACE AREAS; AIRWAYS; ROUTES; AND REPORTING POINTS

1. The authority citation for 14 CFR part 71 continues to read as follows:

Authority: 49 U.S.C. 106(g), 40103, 40113, 40120; E.O. 10854; 24 FR 9565, 3 CFR, 1959–1963 Comp., p. 389.

§ 71.1 [Amended]

2. The incorporation by reference in 14 CFR 71.1 of the Federal Aviation Administration Order 7400.9F, *Airspace Designations and Reporting Points,* dated September 10, 1998, and effective September 16, 1998, is amended as follows:

Paragraph 6005 Class E airspace areas extending upward from 700 feet or more above the surface of the earth.

* * * * *

ASW LA E5 Lake Charles, LA [Revised]

Lake Charles Regional Airport, LA
(Lat. 30°07′34″N., long. 93°13′24″W.)
Lake Charles, Chennault International Airport, LA
(Lat. 30°12′45″N., long. 93°08′37″W.)
Sulphur, Southland Field, LA
(Lat. 30°07′53″N., long. 93°22′34′W.)

That airspace extending upward from 700 feet above the surface within a 7.5-mile radius of Lake Charles Regional Airport and within a 7-mile radius of Chennault International Airport and within 3.5 miles each side of the 155° bearing from the airport extending from the 7-mile radius to 16.7 miles southeast of the airport and within a 5.9-mile radius of Southland Field.

* * * * *

Issued in Fort Worth, TX, on March 24, 1999.

Albert L. Viselli,

Acting Manager, Air Traffic Division, Southwest Region.

[FR Doc. 99–8018 Filed 3–31–99; 8:45 am]

BILLING CODE 4910–13–M

DEPARTMENT OF TRANSPORTATION

Federal Aviation Administration

14 CFR Part 71

[Airspace Docket No. 95–ASW–18]

Revision of Class E Airspace; Farmington, NM

AGENCY: Federal Aviation Administration (FAA), DOT.

ACTION: Final rule.

SUMMARY: This action revises the Class E airspace extending upward from 700 feet above ground level (AGL) at Four Corners Regional Airport, Farmington, NM. The development of a global positioning system (GPS) standard instrument approach procedure (SIAP) to Runway (Rwy) 25 at Four Corners Regional Airport, Farmington, NM, has made this rule necessary. This action is intended to provide adequate controlled airspace extending upward from 700 feet or more above the surface for aircraft executing the GPS Rwy 25 SIAP at Four Corners Regional Airport, Farmington, NM.

EFFECTIVE DATE: 0901 UTC, May 20, 1999.

FOR FURTHER INFORMATION CONTACT: Donald J. Day, Airspace Branch, Air Traffic Division, Southwest Region, Federal Aviation Administration, Fort Worth, TX 76193–0520, telephone 817–222–5593.

SUPPLEMENTARY INFORMATION:

History

On January 24, 1996, a proposal to amend 14 CFR part 71 to revise Class E airspace at Farmington, NM, was published in the **Federal Register** (61 FR 1875). The development of a GPS SIAP to Rwy 25 at Four Corners Regional Airport, Farmington, NM, has made this rule necessary. The intended effect of the proposal was to provide adequate Class E airspace to contain aircraft executing the GPS SIAP at Four Corners regional Airport, Farmington, NM.

Interested parties were invited to participate in this rulemaking proceeding by submitting written comments on the proposal to the FAA. No comments to the proposal were received. The rule is adopted as proposed with the exception of minor editorial changes.

The coordinates for this airspace docket are based on North American Datum 83. Designated Class E airspace areas are published in Paragraph 6005 of FAA Order 7400.9F, dated September 10, 1998, and effective September 16, 1998, which is incorporated by reference in 14 CFR 71.1. The Class E airspace designation listed in this document will be published subsequently in the order.

The Rule

This amendment to 14 CFR part 71 revises Class E airspace at Farmington, NM, extending upward from 700 feet above the surface within a 6.7-mile radius of the Four Corners Regional Airport, Farmington, NM.

The FAA has determined that his regulation only involves an established body of technical regulations that require frequent and routine amendments to keep them operationally current. It therefore (1) is not a ''significant regulatory action'' under Executive Order 12866; (2) is not a ''significant rule'' under DOT Regulatory Policies and Procedures (44 FR 11034; February 26, 1979); and (3) does not warrant preparation of a regulatory evaluation as the anticipated impact is so minimal. Since this is a routine matter that will only affect air traffic procedures, and air navigation, it is certified that this rule will not have a significant economic impact on a substantial number of small entities under the criteria of the Regulatory Flexibility Act.

List of Subjects in 14 CFR Part 71

Airspace, Incorporation by reference, Navigation (air).

Adoption of the Amendment

In consideration of the foregoing, the Federal Aviation Administration amends 14 CFR Part 71 as follows:

PART 71—DESIGNATION OF CLASS A, CLASS B, CLASS C, CLASS D, AND CLASS E AIRSPACE AREAS; AIRWAYS, ROUTES; AND REPORTING POINTS [AMENDED]

1. The authority citation for 14 CFR Part 71 continues to read as follows:

Authority: 49 U.S.C. 106(g), 40103, 40113, 40120; E.O. 10854: 24 FR 9565, 3 CFR, 1959–1963 Comp., p. 389.

§ 71.1 [Amended]

2. The incorporation by reference in 14 CFR 71.1 of the Federal Aviation Administration Order 7400.9F, *Airspace Designations and Reporting Points,* dated September 10, 1998, and effective September 16, 1998, is amended as follows:

Paragraph 6005 Class E airspace areas extending upward from 700 feet or more above the surface of the earth.

* * * * *

ASW NM E5 Farmington, NM [Revised]

Farmington, Four Corners Regional Airport, NM
(Lat. 36°44′31″ N., long. 108°13′47″ W.)
Farmington VORTAC
(Lat. 36°44′54″ N., long. 108°05′56″ W.)

That airspace extending upward from 700 feet above the surface within a 6.7-radius of Four Corners Regional Airport, and within 1.7 miles each side of the 088° bearing from the airport extending from the 6.7-mile radius to 9 miles east of the airport and within 1.6 miles each side of the 266° radial of the Farmington VORTAC extending from the 6.7–mile radius to 10.7 miles west of the airport; and that airspace extending from 1,200 feet above the surface bounded by a line extending from lat. 37°04′00″ N., long, 108°56′54″ W.; to lat. 37°04′00″ N., long 108°27′03″ W.; thence clockwise within a 25.5-mile radius of the Farmington VORTAC to lat. 37°00′00″ N., long. 107°40′18″ W.; to lat. 37°00′00″ N., long. 107°12′58″ W.; then clockwise within a 45.1-mile radius of the Farmington VORTAC to point of beginning; excluding that airspace within the Durango, CO, Class E airspace area, that airspace within and underlying the Crownpoint, NM, Class E airspace area.

* * * * *

Issued in Fort Worth, TX, on March 24, 1999.

Albert L. Viselli,

Acting Manager, Air Traffic Division, Southwest Region.

[FR Doc. 99–8017 Filed 3–31–99; 8:45 am]

BILLING CODE 4910–13–M

DEPARTMENT OF TRANSPORTATION

Federal Aviation Administration

14 CFR Part 71

[Airspace Docket No. 99–AEA–03]

Amendment to Class E Airspace; Palmyra, NY

AGENCY: Federal Aviation Administration (FAA), DOT.

ACTION: Final rule.

SUMMARY: This action removes Class E airspace at Palmyra Airpark, Palmyra, NY. The airport has been reclassified from public to private use and instrument procedures to the airport have been cancelled. The need for Class E airspace no longer exists for Instrument Flight Rules (IFR) operations at the airport. This action will result in the airspace reverting to Class G airspace.

EFFECTIVE DATE: 0901 UTC, May 20, 1999.

FOR FURTHER INFORMATION CONTACT: Mr. Francis Jordan, Airspace Specialist, Airspace Branch, AEA–520, Air Traffic Division, Eastern Region, Federal Aviation Administration, Federal Building #111, John F. Kennedy International Airport, Jamaica, New York 11430, telephone: (718) 553–4251.

SUPPLEMENTARY INFORMATION:

History

On February 19, 1999, a proposal to amend Part 71 of the Federal Aviation Regulations (14 CFR Part 71) to remove the Class E airspace extending upward from 700 feet above the surface at Palmyra Airpark, Palmyra, NY, was published in the **Federal Register** (64 FR 8272).

Interested parties were invited to participate in this rulemaking proceeding by submitting written comments on the proposal to the FAA. No comments to the proposal were received. The rule is adopted as proposed.

The coordinates for this airspace docket are based on North American Datum 83. Class E airspace areas designations for airspace extending upward from 700 feet AGL are published in paragraph 6005 of FAA Order 7400.9F, dated September 10, 1998, and effective September 16, 1998, which is incorporated by reference in 14 CFR 71.1. The Class E airspace designation listed in this document will be removed subsequently from the Order.

The Rule

This amendment to Part 71 of the Federal Aviation Regulations (14 CFR Part 71) removes Class E airspace at Palmyra, NY. The need for controlled airspace extending from 700 feet AGL at the Palmyra Airpark no longer exists. This area will be removed from the appropriate aeronautical charts.

The FAA has determined that this regulation only involves an established body of technical regulations for which frequent and routine amendments are necessary to keep them operationally current. Therefore, this regulation—(1) is not a ''significant regulatory action'' under Executive Order 12866; (2) is not a ''significant rule'' under DOT Regulatory Policies and Procedures (44 FR 11034; February 26, 1979); and (3) does not warrant preparation of a Regulatory Evaluation as the anticipated impact is so minimal. Since this is a routine matter that will only affect air traffic procedures and air navigation it is certified that this rule will not have significant economic impact on a substantial number of small entities under the criteria of the Regulatory Flexibility Act.

List of Subjects in 14 CFR Part 71

Airspace, Incorporation by reference, Navigation (air).

Adoption of the Amendment

In consideration of the foregoing, the Federal Aviation Administration amends 14 CFR part 71 as follows:

PART 71—[AMENDED]

1. The authority citation for 14 CFR part 71 continues to read as follows:

Authority: 49 U.S.C. 106(g), 40103, 40113, 40120; EO 10854, 24 FR 9565, 3 CFR, 1959–1963 Comp., p. 389.

§ 71.1 [Amended]

The incorporation by reference in 14 CFR 71.1 of Federal Aviation Administration Order 7400.9F, Airspace Designations and Reporting Points, dated September 10, 1998, and effective September 16, 1998, is amended as follows:

Paragraph 6005 Class E airspace areas extending upward from 700 feet or more above the surface of the earth

* * * * *

AEA NY E5, Palmyra, NY [Removed]

* * * * *

Issued in Jamaica, New York on March 23, 1999.

Franklin D. Hatfield,

Manager, Air Traffic Division, Eastern Region.

[FR Doc. 99–8015 Filed 3–31–99; 8:45 am]

BILLING CODE 4910–13–M

DEPARTMENT OF TRANSPORTATION

Federal Aviation Administration

14 CFR Part 71

[Airspace Docket No. 99–AEA–02]

Establishment of Class E Airspace; Logan, WV

AGENCY: Federal Aviation Administration (FAA) DOT.

ACTION: Final rule.

SUMMARY: This action establishes Class E airspace extending upward from 700 feet Above Ground Level (AGL) at Logan, WV. The development of new Standards Instrument Approach Procedures (SIAP) based on the Global Positioning System (GPS) to Logan County Airport, Logan, WV, requires the establishment of controlled airspace extending upward from 700 feet Above Ground Level (AGL) to accommodate the SIAPs and for Instrument Flight Rules (IFR) operations to the airport. This action is intended to provide adequate Class E airspace to contain IFR operations to Logan County Airport at Logan, WV.

EFFECTIVE DATE: 0901 UTC, May 20, 1999.

FOR FURTHER INFORMATION CONTACT: Mr. Francis Jordan, Airspace Specialist, Airspace Branch, AEA–520, Air Traffic Division, Eastern Region, Federal Aviation Administration, Federal Building #111, John F. Kennedy International Airport, Jamaica, New York 11430, telephone: (718) 553–4521.

SUPPLEMENTARY INFORMATION:

History

On February 19, 1999, a notice proposing to amend Part 71 of the Federal Aviation Regulations (14 CFR Part 71) to establish Class E airspace at Logan, WV, was published in the **Federal Register** (64 FR 8271). A GPS RWY 6 SIAP and GPS RWY 24 SIAP have been developed for Logan County Airport. Controlled airspace extending upward from 700 feet AGL is needed to accommodate the SIAPs and for IFR operations at the airport.

The notice proposed to establish controlled airspace extending upward from 700 feet AGL to contain IFR operations in controlled airspace during portions of the terminal operation and while transitioning between the enroute and terminal environments.

Interested parties were invited to participate in this rulemaking proceeding by submitting written comments on the proposal to the FAA. No comments to the proposal were

received. The rule is adopted as proposed.

The coordinated for this airspace docket are based on North American Datum 83. Class E airspace areas designations for airspace extending upward from 700 feet AGL are published in paragraph 6005 of FAA Order 7400.9F, dated September 10, 1998, and effective September 16, 1998, which is incorporated by reference in 14 CFR 71.1. The Class E airspace designation listed in this document will be published subsequently in the Order.

The Rule

This amendment to Part 71 of the Federal Aviation Regulations (14 CFR part 71) establishes Class E airspace at Logan, WV, to provide controlled airspace extending upward from 700 feet AGL for aircraft executing the GPS RWY 6 SIAP and GPS RWY 24 SIAP to Logan County Airport.

The FAA has determined that this regulation only involves an established body of technical regulations for which frequent and routine amendments are necessary to keep them operationally current. Therefore, this regulation—(1) is not a ''significant regulatory action'' under Executive Order 12866; (2) is not a ''significant rule'' under DOT Regulatory Policies and Procedures (44 FR 11034; February 26, 1979); and (3) does not warrant preparation of a Regulatory Evaluation as the anticipated impact is so minimal. Since this is a routine matter that will only affect air traffic procedures and air navigation it is certified that this rule will not have significant economic impact on a substantial number of small entities under the criteria of the Regulatory Flexibility Act.

List of Subjects in 14 CFR Part 71

Airspace, Incorporation by reference, Navigation (air).

Adoption of the Amendment

In consideration of the foregoing, the Federal Aviation Administration amends 14 CFR part 71 as follows:

PART 71—[AMENDED]

1. The authority citation for 14 CFR part 71 continues to read as follows:

Authority: 49 U.S.C. 106(g), 40103, 40113, 40120; EO 10854, 24 FR 9565, 3 CFR, 1959–1963 Comp., p. 389.

§ 71.1 [Amended]

2. The incorporation by reference in 14 CFR 71.1 of Federal Aviation Administration Order 7400.9F, Airspace Designations and Reporting Points, dated September 10, 1998, and effective September 16, 1998, is amended as follows:

Paragraph 6005 Class E airspace areas extending upward from 700 feet or more above the surface of the earth.

* * * * *

AEA WV E5 Logan, WV [New]

Logan County Airport, WV
(Lat. 37°51′20″ N., long. 81°54′57″ W.)

That airspace extending upward from 700 feet above the surface within a 10-mile radius of Logan County Airport.

* * * * *

Issued in Jamaica, New York on March 23, 1999.

Franklin D. Hatfield,

Manager, Air Traffic Division, Eastern Region.

[FR Doc. 99–8014 Filed 3–31–99; 8:45 am]

BILLING CODE 4910–13–M

SECURITIES AND EXCHANGE COMMISSION

17 CFR Parts 275 and 279

[Release No. IA–1794; File No. S7–2–99]

RIN 3235–AH60

Transition Rule for Ohio Investment Advisers

AGENCY: Securities and Exchange Commission.

ACTION: Final rule.

SUMMARY: The Securities and Exchange Commission (''Commission'') is adopting a new rule and form amendments under the Investment Advisers Act of 1940 for investment advisers that will be subject to a new Ohio investment adviser statute. The new rule provides a transition process for these investment advisers to switch from Commission to state registration.

EFFECTIVE DATES: Rule 203A–6 (17 CFR 275. 203A–6) will become effective May 3, 1999. Amendments to Schedule I to Form ADV (279.1) will become effective on December 31, 1999.

FOR FURTHER INFORMATION CONTACT: Jeffrey O. Himstreet, Attorney, at (202) 942–0716, Task Force on Investment Adviser Regulation, Division of Investment Management, Securities and Exchange Commission, 450 Fifth Street, NW, Washington, DC 20549–0506.

SUPPLEMENTARY INFORMATION: The Commission is adopting rule 203A–6 (17 CFR 275.203A–6) and technical amendments to Schedule I of Form ADV (17 CFR 279.1 W), both under the Investment Advisers Act of 1940 (15 U.S.C. 80b)(''Advisers Act'' or ''Act''.

I. Background

Under the Advisers Act, as amended by the Investment Advisers Supervision Coordination Act (''Coordination Act''),[1] the Commission has regulatory responsibility for investment advisers that have at least $25 million of assets under management or advise a registered investment company.[2] The Commission also has regulatory responsibility for advisers that have their principal place of business in a state that has not enacted an investment adviser statute, regardless of their assets under management.[3] At the time the Coordination Act was adopted, Ohio was one of four states that did not have an investment adviser statute.[4] Recently, Ohio enacted investment adviser legislation that will become effective on March 18, 1999.[5]

On January 29, 1999, we issued a release proposing rule 203A–6 (''Proposing Release'') to assist the Ohio Division of Securities and to facilitate the transition of regulatory responsibilities for smaller Ohio advisers.[6] We also proposed technical, corresponding changes to Schedule I to Form ADV. We received two comment letters in response to the proposal, both of which supported the new rule and form amendments.[7] The Commission is adopting rule 203A–6 and technical revisions to Schedule I to Form ADV as proposed.

II. Discussion

Under new rule 203A–6, new Ohio advisers (*i.e.*, those advisers that are not currently registered with the Commission) that would not be eligible for Commission registration would

---

[1] Title III of the National Securities Markets Improvement Act of 1996, Pub. L. No. 104–290, 110 Stat. 3416 (1996) (codified in scattered sections of the United States Code).

[2] 15 U.S.C. 80b–3A(a).

[3] *See* Rules implementing Amendments to the Investment Advisers Act of 1940, Investment Advisers Act Release No. 1633 (May 15, 1997) [64 FR 28112 (May 22, 1997)] at II.E.1.

[4] Colorado, Iowa and Wyoming also did not have investment adviser statutes at the time Congress enacted the Coordination Act. Since that time, Colorado and Iowa have enacted investment adviser legislation, and we recently amended Schedule I to Form ADV to reflect these developments. Technical Changes to Schedule I to Form ADV, Investment Advisers Act Release No. 1733A (Jan. 7, 1999) [64 FR 2120 (Jan. 13, 1999)].

[5] H.B. 695, 122d Gen. Ass., Reg. Sess. (Ohio 1997–1998).

[6] Transition Rule for Ohio Investment Advisers, Investment Advisers Act Release No. 1787 (Jan. 29, 1999) [64 FR 5722 (Feb. 5, 1999)].

[7] Letter from Thomas Geyer, Commissioner, Ohio Securities Division to Jonathan G. Katz, Secretary, SEC (Feb. 17, 1999), File No. S7–2–99; Letter from Peter C. Hildreth, President, North American Securities Administrators Association, Inc. to Johathan G. Katz, Secretary, SEC (Mar. 8, 1999), File No. S7–2–99.

register with the Ohio Division of Securities on or after the effective date of Ohio's implementing rules.[8] Smaller Ohio advisers (*i.e.* those that have less than $25 million in assets under management) that are currently registered with the Commission will switch over to registration with the Ohio Division of Securities between March 18,1999 and December 31, 1999.[9] These advisers may withdraw their Commission registration after they register with the Ohio Division of Securities, but not later than March 30, 2000.[10]

With the enactment of the Ohio law, smaller Ohio advisers may no longer rely on the location of their principal office and place of business as a basis for Commission registration. The Commission therefore is amending Schedule I by deleting the references to Ohio from both Schedule I and the Instructions to Schedule I. The amendments to Schedule I will become effective on December 31, 1999. As a result of the amendments to Schedule I, advisers will no longer be able to claim eligibility for Commission registration based on the location of their principal office and place of business in Ohio and must withdraw from Commission registration, unless otherwise eligible.

III. Cost/Benefit Analysis

New rule 203A–6 and the technical amendments to Schedule I to Form ADV are designed to facilitate the transition of certain advisers from Commission to state registration. This transition further implements congressional intent to reallocate regulatory responsibilities for investment advisers between the Commission and state securities authorities.

New rule 203A–6 will not have a significant effect on the regulatory burden borne by investment advisers. The Coordination Act imposes certain costs on advisers as a consequence of no longer being registered with the Commission, and, at the same time, confers benefits on these advisers, such as no longer requiring them to file amendments to Form ADV with the Commission. The costs the Advisers Act imposes on advisers withdrawing from Commission registration is estimated to be $10 per adviser (or, $5,400 in the aggregate).[11] The new rule does not alter these burdens and benefits, but merely establishes a time by which advisers are required to switch their registration from the Commission to the Ohio Division of Securities.[12] Therefore, the net costs imposed by the new rule and form amendments are negligible. Smaller Ohio advisers may withdraw from Commission registration at any time and avoid any potential burdens associated with new rule 203A–6.

In the Proposing Release, we requested comment on the cost/benefit analysis. No comments on the cost/benefit analysis were provided. The Commission believes that the costs imposed by the new rule are insignificant.

IV. Paperwork Reduction Act

As discussed in the Proposing Release, the amendments to Schedule I to Form ADV contain a ''collection of information within the meaning of the Paperwork Reduction Act of 1995 (44 U.S.C. 3501 to 3520). The amendments to Schedule I to Form ADV are necessary to implement the Coordination Act with respect to advisers with their principal office in Ohio. The Commission received no public comment in response to its request for comments on the Paperwork Reduction Act analysis.

Under Office of Management and Budget rules, an agency may not conduct or sponsor, and a person is not required to respond to, a collection of information unless the agency displays a valid OMB control number.[13] Therefore, we have submitted the collection of information requirements to the Office of Management and Budget for review in accordance with 44 U.S.C. 3507(d) and 5 CFR 1320.11. The title for the collection of information is ''Schedule I to Form ADV,'' under the Advisers Act. Schedule I to Form ADV contains a currently approved collection of information under OMB control number 3235–0490. OMB has approved the PRA request in accordance with 44 U.S.C. 3507(d), and has assigned control number 3235–0490 to Schedule I to Form ADV with an expiration date of March 31, 2002.

The Commission is adopting amendments to Schedule I to Form ADV that will delete references to Ohio contained in Schedule I and the Instructions to Schedule I. Each investment adviser must declare on Schedule I to Form ADV whether it is eligible for Commission registration. The rules imposing this collection of information are found at 17 CFR 275.203–1 and 17 CFR 279.1. Rule 204–1 (17 CFR 275.204–1) requires an investment adviser registered with the Commission to file an amended Schedule I to From ADV annually within 90 days after the end of the investment adviser's fiscal year. The Commission is amending Schedule I only, and not Form ADV.

There are no additional burdens associated with this filing that are not already imposed by the statutory requirement that advisers withdraw from Commission registration if no longer eligible for Commission registration. The withdrawal procedures impose no additional paperwork burdens on advisers. The new rule creates a March 30, 2000 deadline by which smaller Ohio advisers must withdraw from Commission registration. Additionally, smaller Ohio advisers may withdraw from Commission registration at any time prior to March 30, 2000 and not be subject to the new rule.

The Commission estimates that there are approximately 8,200 investment advisers registered with the Commission. Approximately 899 investment advisers with their principal office in Ohio that are registered with the Commission would respond annually to the information requirements of Schedule I. In addition, an estimated 760 new advisers will file Schedule I to Form ADV annually, approximately 83 of which are estimated to have their principal office in Ohio. Of these 83 advisers, an estimated 72 will file Schedule I to Form ADV an average of once a year, and the remaining 11 that rely on the exemption provided by rule 203A–2(d) (17 CFR 275.203A–d) will file Schedule I to Form ADV an average of twice each

[8] The Ohio Division of Securities estimates that its implementing rules would be effective by March 24, 1999.

[9] Ohio Legislation, *supra* note 5 (to be codified at section 1707.161(E) of the Ohio Revised Code). In addition, advisers ineligible for Commission registration may be required to register with other state securities authorities, subject to the Advisers Act. The Coordination Act amended the Advisers Act to add Section 222(d) [15 U.S.C. 80b–22(d)], which makes state investment adviser statues inapplicable to advisers that do not have a place of business in the state and have fewer than six clients who are residents of that state.

[10] New rule 203A–6(b). We recognize that Ohio investment advisers may be registered with, and regulated by, both the Ohio Divison of Securities and the Commission until the advisers withdraw from Commission registration. During this time, Ohio investment advisers may be subject to both federal and state regulatory requirements. Ohio investment advisers no longer eligible for Commission registration may avoid this ''duplicate regulation'' by withdrawing from Commission registration at any time after they registered with the State of Ohio.

[11] The Office of Management and Budget has approved a collection of information for Form ADV–W (OMB Control No. 3235–0313). The estimated burden is 1.0 hours, per response. Based on an average salary of $10 per hour, including benefits, the total costs imposed by the Advisers Act on Ohio advisers required to withdraw from Commission registration is approximately $5,400.

[12] Under current rules, advisers that are no longer eligible for Commission registration under section 203A(a) of the Act [15 U.S.C. 80b–3a(a)] must withdraw from registration within 90 days after the date the adviser is required by rule 204–1(a)[17 CFR 275.204–1(a)]. *See* 17 CFR 279.1 (Schedule I, instruction 6).

[13] 13 44 U.S.C. 3506(c)(1)(B)(v).

year. It is estimated that the Commission will receive approximately 993 total responses from investment advisers with their principal office in Ohio.

The form amendments will affect only investment advisers with their principal office in Ohio, and will not materially alter the number of burden hours for those advisers. It is estimated that the amendments to Schedule I to Form ADV imposes on Ohio investment advisers 852.75 total burden hours. This estimate would likely remain constant absent the new rule and form amendments. The collection of information required by Schedule I is mandatory, and responses are not kept confidential. The form amendments, as adopted, do not impose a greater paperwork burden upon respondents than that estimated and described in the Proposing Release.

V. Summary of Final Regulatory Flexibility Analysis

The Commission has prepared a Final Regulatory Flexibility Analysis (''FRFA'') in accordance with the Regulatory Flexibility Act (''Reg. Flex. Act'') (5 U.S.C. 604) in connection with the adoption of the rule described in this Release. An Initial Regulatory Flexibility Analysis (''IRFA'') was prepared in accordance with 5 U.S.C. 603 in conjunction with the Proposing Release and was made available to the public. A summary of the IRFA was published in the Proposing Release. We received no comments on the IRFA.

The FRFA discusses both the need for, and objectives of, the rule and form amendments adopted by the Commission. The new rule and form amendments, as adopted, create a transition process for smaller Ohio advisers. The new rule (a) provides a one-year transition period for advisers to switch from Commission registration to state registration, and (b) requires smaller Ohio advisers to withdraw from Commission registration by March 30, 2000. The amendments to Schedule I delete references to Ohio to reflect that Ohio has recently enacted an investment adviser statute.

The FRFA also provides a description and an estimate of the number of small entities to which the rule amendments will apply. For the purposes of the Advisers Act and the Reg. Flex. Act, an investment adviser, under Commission rules, generally is a small entity if (i) it has assets under management of less than $25 million reported on its most recent Schedule I to Form ADV (17 CFR 279.1); (ii) it does not have total assets of $5 million or more on the last day of the most recent fiscal year; and (iii) it is not in a control relationship with another investment adviser that is not a small entity.[14]

It is estimated that approximately 1,000 Commission-registered advisers are small entities. It is estimated that approximately 540 of these small-entity advisers have their principal office in Ohio. Relatively few small entities thus will be affected by the new rule and form amendments. As explained in the FRFA, the majority of these advisers are smaller Ohio advisers that will be required by the Coordination Act to withdraw from Commission registration and register with the various state securities authorities. Absent Commission rulemaking, the Coordination Act requires smaller Ohio advisers to withdraw from Commission registration after the Ohio law is effective. It takes, on average, one hour to complete form ADV–W.[15] The costs associated with withdrawing from Commission registration would exist absent the new rule and form amendments. Therefore, the net costs imposed by the new rule and form amendments are negligible.

The FRFA states that the rule amendments will impose no new reporting or recordkeeping requirements and will eliminate certain other requirements. The new rule does, however, create a deadline for complying with an existing requirement. Smaller Ohio advisers no longer eligible for Commission registration will be required to withdraw from Commission registration by March 30, 2000. These advisers will no longer be required to file an amended Schedule I with the Commission each year, or the other annual updates to Form ADV.

The new rule and form amendments will not materially alter the time required for investment advisers to comply with these rules.[16] The new rule and form amendments also are necessary to implement the Coordination Act with respect to smaller Ohio advisers. The FRFA states that the burden to investment advisers subject to the rule should be outweighed by the benefits to the investment advisers subject to the new rule and form amendments. There are no rules that duplicate, overlap, or conflict with, the new rule and form amendments.

Finally, the FRFA states that, in adopting the new rule and form amendments, we considered (a) the establishment of differing compliance or reporting requirements or timetables that take into account resources available to small entities; (b) the clarification, consolidation, or simplification of compliance and reporting requirements under the new rule for small entities; (c) the use of performance rather than design standards; and (d) an exemption from coverage of the new rule, or any part of the new rule, for small entities. The FRFA explains that the Commission concluded that establishing different standards for small entities is unnecessary and inappropriate.

The FRFA is available for public inspection in File No. S7–2–99, and a copy may be obtained by contacting Jeffrey O. Himstreet, Attorney, Securities and Exchange Commission, 450 5th Street, NW, Washington, DC 20549–0506.

VI. Statutory Authority

The Commission is adopting new rule 203A–6 pursuant to the authority set forth in section 203(h) (15 U.S.C. 80b–3(h)); section 203A(c) (15 U.S.C. 80b–3a(c)); and section 211(a) (15 U.S.C. 80b–11(a)) of the Investment Advisers Act of 1940.

The Commission is adopting amendments to Form ADV pursuant to the authority set forth in section 203(c)(1) (15 U.S.C. 80b–3(c)(1)); and section 204 (15 U.S.C. 80b–4) of the Investment Advisers Act of 1940.

List of Subjects in 17 CFR Parts 275 and 279

Reporting and recordkeeping requirements, Securities.

Text of Rule and Form Amendments

For the reasons set out in the preamble, Title 17, Chapter II of the Code of Federal Regulations is amended as follows:

PART 275—RULES AND REGULATIONS, INVESTMENT ADVISERS ACT OF 1940

1. The authority citation for Part 275 continues to read in part as follows:

Authority: 15 U.S.C. 80b–2(a)(17), 80b–3, 80b–4, 80b–6(4), 80b–6a, 80b–11, unless otherwise noted.

* * * * *

[14] Rule 0–7 [17 CFR 275.0–7].

[15] The Office of Management and Budget has approved a collection of information for Form ADV–W (OMB Control No. 3235–0313). The estimated average burden is 1.0 hours, per response. Based on an average salary of $10 per hour, including benefits, the total costs imposed by the Advisers Act on Ohio advisers required to withdraw from Commission registration is approximately $5,400.

[16] Currently, investment advisers that are required to withdraw from Commission registration because they are no longer eligible under section 203A(a) of the Act [15 U.S.C. 80b–3a(a)] are required to withdraw from registration within 90 days after the date the adviser's Schedule I was required by rule 204–1(a) [17 CFR 275.204–1(a)] to have been filed with the Commission. *See* Schedule I, instruction 6 [17 CFR 279.1]

2. Section 275.203A–6 is added to read as follows:

§ 275.203A–6 Transition period for Ohio investment advisers.

(a) *Ohio Authority.* Notwithstanding section 203A(b) of the Act (15 U.S.C. 80b–3a(b)), the Ohio Revised Code, sections 1707.01 to 1707.99, is effective with respect to an investment adviser registered with the Commission that, but for having its principal office and place of business in Ohio, would be prohibited from registering with the Commission under section 203A of the Act (15 U.S.C. 80b–3a).

(b) *Withdrawal Required.* Every investment adviser that is registered with the Commission solely because its principal office and place of business is located in Ohio must withdraw from Commission registration by March 30, 2000.

PART 279—FORMS PRESCRIBED UNDER THE INVESTMENT ADVISERS ACT OF 1940

3. The authority citation for part 279 continues to read as follows:

Authority: The Investment Advisers Act of 1940, 15 U.S.C. 80b–1, *et seq.*

4. By amending Schedule I to Form ADV (referenced in § 279.1) to remove all references to ''Ohio'' and by amending the Instructions to Schedule I to Form ADV (referenced in § 279.1) to remove all references to ''Ohio''.

§ 279.1 [Amended]

Note: The text of Schedule I to Form ADV (§ 279.1) does not and the amendments will not appear in the Code of Federal Regulations.

Dated: March 25, 1999.

By the Commission.

Margaret H. McFarland,

Deputy Secretary.

[FR Doc. 99–7955 Filed 3–31–99; 8:45 am]

BILLING CODE 8010–01–P

DEPARTMENT OF HEALTH AND HUMAN SERVICES

Food and Drug Administration

21 CFR Parts 510, 520, 522, and 558

Animal Drugs, Feeds, and Related Products; Technical Amendments

AGENCY: Food and Drug Administration, HHS.

ACTION: Final rule; technical amendment.

SUMMARY: The Food and Drug Administration (FDA) is updating the animal drug regulations to reflect corrections of previously approved new animal drug applications (NADA's). Several sponsors currently specified in the list of sponsors of approved applications and in the animal drug approval regulations are incorrect. This action is being taken to improve the accuracy of the regulations.

EFFECTIVE DATE: April 1, 1999.

FOR FURTHER INFORMATION CONTACT: Judith M. O'Haro, Center for Veterinary Medicine (HFV–6), Food and Drug Administration, 7500 Standish Pl., Rockville, MD 20855, 301–827–3664.

SUPPLEMENTARY INFORMATION: FDA has found several errors in the agency's regulations concerning approval of animal drugs, feeds, and related products including the list of sponsors of approved applications. To correct those errors, FDA is amending 21 CFR 510.600(c)(1) and (c)(2) to remove several sponsor names and drug labeler codes because the firms are no longer the holders of any approved NADA's. This document is also amending the animal drug approval regulations by correcting the nonsubstantive errors in 21 CFR 520.260, 520.2184, 520.2220b, 522.723, 522.800, 558.140, 558.485, and 558.635.

List of Subjects

21 CFR Part 510

Administrative practice and procedure, Animal drugs, Labeling, Reporting and recordkeeping requirements.

21 CFR Parts 520 and 522

Animal drugs.

21 CFR Part 558

Animal drugs, Animal feeds.

Therefore, under the Federal Food, Drug, and Cosmetic Act and under authority delegated to the Commissioner of Food and Drugs and redelegated to the Center for Veterinary Medicine, 21 CFR parts 510, 520, 522, and 558 are amended as follows:

PART 510—NEW ANIMAL DRUGS

1. The authority citation for 21 CFR part 510 continues to read as follows:

Authority: 21 U.S.C. 321, 331, 351, 352, 353, 360b, 371, 379e.

2. Section 510.600 *Names, addresses, and drug labeler codes of sponsors of approved applications* is amended in the table in paragraph (c)(1) by removing the entries for ''Affiliated Laboratories Division, Whitmoyer Laboratories, Inc.'', ''Albers Milling Co.'', ''Allied Pharmacal, Division of K.C. Pharmacal, Inc.'', ''Ayerst Laboratories, Division of American Home Products, Corp.'', ''Bristol Laboratories, Div. of Bristol-Myers Co.'', ''Cooper U.S.A., Inc.'', ''Cutter Laboratories, Inc.'', ''Dawes Laboratories, Inc.'', ''Feed Products, Inc.'', ''H. Clay Glover Co., Inc.'', ''Gooch Feed Mill Corp.'', ''Grain Processing Corp.'', ''ICI Americas, Inc.'', ''KASCO–EFCO Laboratories, Inc.'', ''Dr. LeGear, Inc.'', ''McNeil Laboratories, Inc.'', ''Triple ''F'', Inc.'', ''Tutag Pharmaceuticals, Inc.'', and ''Western Serum Co.''; by alphabetically adding a new entry for ''Equi Aid Products, Inc.''; and in the table in paragraph (c)(2) by removing the entries for ''000015, 000045, 000046, 000124, 000161, 000794, 010471, 010616, 011398, 011490, 011492, 011511, 011825, 011950, 012983, 013959, 017826, 021798, 022591, and 024264''; and by numerically adding a new entry for ''062240'' to read as follows:

§ 510.600 Names, addresses, and drug labeler codes of sponsors of approved applications.

* * * * *

(c) * * *

(1) * * *

Firm name and address	Drug labeler code
* * * *	* * *
Equi Aid Products, Inc., 1517 West Knudsen Dr., Phoenix, AZ 85027	062240
* * * *	* * *

(2) * * *

Drug labeler code	Firm name and address
* * * *	* * *
062240	Equi Aid Products, Inc., 1517 West Knudsen Dr., Phoenix, AZ 85027
* * * *	* * *

PART 520—ORAL DOSAGE FORM NEW ANIMAL DRUGS

3. The authority citation for 21 CFR part 520 continues to read as follows:

Authority: 21 U.S.C. 360b.

§ 520.260 [Amended]

4. Section 520.260 *n-Butyl chloride capsules* is amended in paragraph (b)(2) by removing ''012983'' and adding in its place ''038782''.

§ 520.2184 [Amended]

5. Section 520.2184 *Sodium sulfachloropyrazine monohydrate* is amended in paragraph (b) by removing the phrase ''Nos. 010042 and 053501'' and adding in its place ''No. 010042''.

PART 522—IMPLANTATION OR INJECTABLE DOSAGE FORM NEW ANIMAL DRUGS

6–7. The authority citation for 21 CFR part 522 continues to read as follows:

Authority: 21 U.S.C. 360b.

§ 522.723 [Amended]

8. Section 522.723 *Diprenorphine hydrochloride injection* is amended in pargraph (c) by removing ''010042'' and adding in its place ''053923''.

§ 522.800 [Amended]

9. Section 522.800 *Droperidol and fentanyl citrate injection* is amended in pargraph (b) by removing ''000045'' and adding in its place ''000061''.

PART 558—NEW ANIMAL DRUGS FOR USE IN ANIMAL FEEDS

10. The authority citation for 21 CFR part 558 continues to read as follows:

Authority: 21 U.S.C. 360b, 371.

§ 558.140 [Amended]

11. Section 558.140 *Chlortetracycline and sulfamethazine* is amended in paragraph (a) by removing ''000004'' and adding in its place ''063238''.

§ 558.485 [Amended]

12. Section 558.485 *Pyrantel tartrate* is amended by removing and reserving paragraph (a)(17).

§ 558.635 [Amended]

13. Section 558.635 *Virginiamycin* is amended in paragraph (b)(2) by removing ''011490'' and adding in its place ''046573''.

Dated: March 23, 1999.

Margaret Ann Miller,

Acting Director, Office of New Animal Drug Evaluation, Center for Veterinary Medicine.

[FR Doc. 99–7925 Filed 3–31–99; 8:45 am]

BILLING CODE 4160–01–F

DEPARTMENT OF HEALTH AND HUMAN SERVICES

Food and Drug Administration

21 CFR Part 520

Oral Dosage Form New Animal Drugs; Sulfadimethoxine Tablets and Boluses; Technical Amendment

AGENCY: Food and Drug Administration, HHS.

ACTION: Final rule; technical amendment.

SUMMARY: The Food and Drug Administration (FDA) is amending the animal drug regulations to codify an approved new animal drug application (NADA) held by Pfizer, Inc. The NADA provides for use of sulfadimethoxine (SDM) tablets to treat bacterial infections of dogs and cats.

EFFECTIVE DATE: April 1, 1999.

FOR FURTHER INFORMATION CONTACT: Diane T. McRae, Center for Veterinary Medicine (HFV–102), Food and Drug Administration, 7500 Standish Pl., Rockville, MD 20855, 301–827–0212.

SUPPLEMENTARY INFORMATION: Pfizer, Inc., 235 East 42d St., New York, NY 10017, is sponsor of NADA 15–102 that provides for oral use of SDM tablets for the treatment of SDM-susceptible bacterial infections of dogs and cats. The NADA was approved on December 14, 1964, for Hoffmann LaRoche, Inc. After several changes of sponsors, the current sponsor of the NADA, Pfizer, Inc., has filed a supplement to NADA 15–102 providing information supporting prior approval of their NADA and has requested codification. FDA concurs that NADA 15–102 was approved for use in dogs and cats on December 14, 1964, and therefore, amends 21 CFR 520.2220b to reflect the approval. Also, FDA is amending the regulation to add several editorial changes by removing paragraph (a), by redesignating paragraphs (b), (d), and (e) as paragraphs (a), (b), and (d), respectively, and by revising new paragraphs (a) and (d)(2) to reflect the codification.

Approval of this supplemental NADA does not require additional safety and effectiveness data. Therefore, a freedom of information summary is not required.

The agency has determined under 21 CFR 25.33(a)(1) that this action is of a type that does not individually or cumulatively have a significant effect on the human environment. Therefore, neither an environmental assessment nor an environmental impact statement is required.

List of Subject 21 CFR Part 520

Animal drugs.

Therefore, under the Federal Food, Drug, and Cosmetic Act and under authority delegated to the Commissioner of Food and Drugs and redelegated to the Center for Veterinary Medicine, 21 CFR part 520 is amended as follows:

PART 520—ORAL DOSAGE FORM NEW ANIMAL DRUGS

1. The authority citation for 21 CFR part 520 continues to read as follows:

Authority: 21 U.S.C. 360b.

2. Section 520.2220b is amended by removing paragraph (a), by redesignating paragraphs (b), (d), and (e) as paragraphs (a), (b), and (d), respectively, and by revising newly redesignated paragraphs (a) and (d)(2) to read as follows:

§ 520.2220b Sulfadimethoxine tablets and boluses.

(a) *Sponsors.* Approval to firms identified in § 510.600(c) of this chapter as follows:

(1) To 000069, approval for use as in paragraphs (d)(1), (d)(2), and (d)(3) of this section.

(2) To 000061, approval for use as in paragraph (d)(2).

* * * * *

(d) * * *

(2) *Dogs and cats.* (i) *Amount.* 12.5 to 25 milligrams per pound of body weight.

(ii) *Indications for use.* Treatment of sulfadimethoxine-susceptible bacterial infections.

(iii) *Limitations.* Administer 25 milligrams per pound of body weight on the first day followed by 12.5 milligrams per pound of body weight per day until the animal is free of symptoms for 48 hours. Federal law restricts this drug to use by or on the order of a licensed veterinarian.

* * * * *

Dated: March 17, 1999.

Margaret Ann Miller,

Acting Director, Office of New Animal Drug Evaluation, Center for Veterinary Medicine.

[FR Doc. 99–7924 Filed 3–31–99; 8:45 am]

BILLING CODE 4160–01–F

DEPARTMENT OF HEALTH AND HUMAN SERVICES

Food and Drug Administration

21 CFR Part 522

Implantation or Injectable Dosage Form New Animal Drugs; Dinoprost Tromethamine Sterile Solution

AGENCY: Food and Drug Administration, HHS.

ACTION: Final rule.

SUMMARY: The Food and Drug Administration (FDA) is amending the animal drug regulations to reflect approval of an abbreviated new animal drug application (ANADA) filed by Phoenix Scientific, Inc. The ANADA provides for intramuscular use of dinoprost tromethamine sterile solution in cattle, swine, and mares.

EFFECTIVE DATE: April 1, 1999

FOR FURTHER INFORMATION CONTACT: Lonnie W. Luther, Center For Veterinary Medicine (HFV–102), Food and Drug Administration, 7500 Standish Pl., Rockville, MD 20855, 301–827–0209.

SUPPLEMENTARY INFORMATION: Phoenix Scientific, Inc., 3915 South 48th St. Terrace, P.O. Box 6457, St. Joseph, MO 64506–0457, filed ANADA 200–253 that provides for use of ProstaMate™ (dinoprost tromethamine injection) for intramuscular, veterinary prescription use for estrus synchronization, treatment of unobserved (silent) estrus and pyometra (chronic endometritis) in cattle; for abortion of feedlot and other nonlactating cattle; for parturition induction in swine; and for controlling the timing of estrus in estrous cycling mares and clinically anestrous mares that have a corpus luteum.

Approval of Phoenix's ANADA 200–253 for ProstaMate™ (dinoprost tromethamine injection) sterile solution is as a generic copy of Pharmacia & Upjohn's NADA 108–901 Lutalyse® (dinoprost tromethamine) sterile solution. ANADA 200–253 is approved as of February 12, 1999, and the regulations are amended in 21 CFR 522.690(b) to reflect the approval. The basis of approval is discussed in the freedom of information summary.

In accordance with the freedom of information provisions of 21 CFR part 20 and 514.11(e)(2)(ii), a summary of safety and effectiveness data and information submitted to support approval of this application may be seen in the Dockets Management Branch (HFA–305), Food and Drug Administration, 5630 Fishers Lane, rm. 1061, Rockville, MD 20852, between 9 a.m. and 4 p.m., Monday through Friday.

The agency has determined under 21 CFR 25.33(a)(1) that this action is of a type that does not individually or cumulatively have a significant effect on the human environment. Therefore, neither an environmental assessment nor an environmental impact statement is required.

List of Subjects in 21 CFR Part 522

Animal drugs.

Therefore, under the Federal Food, Drug, and Cosmetic Act and under authority delegated to the Commissioner of Food and Drugs and redelegated to the Center for Veterinary Medicine, 21 CFR part 522 is amended as follows:

PART 522—IMPLANTATION OR INJECTABLE DOSAGE FORM NEW ANIMAL DRUGS

1. The authority citation for 21 CFR part 522 continues to read as follows:

Authority: 21 U.S.C. 360b.

§ 522.690 [Amended]

2. Section 522.690 *Dinoprost tromethamine sterile solution* is amended in paragraph (b) by removing ''No. 000009'' and adding in its place ''Nos. 000009 and 059130''.

Dated: March 18, 1999.

Stephen F. Sundlof,

Director, Center for Veterinary Medicine.

[FR Doc. 99–7922 Filed 3–31–99; 8:45 am]

BILLING CODE 4160–01–F

AGENCY FOR INTERNATIONAL DEVELOPMENT

22 CFR Chapter II

Establishment of Agency for International Development as an Executive Agency

AGENCY: U.S. Agency for International Development.

ACTION: Final rule.

SUMMARY: The U.S. Agency for International Development (''USAID'') is amending its chapter in the Code of Federal Regulations (''CFR'') to delete the reference to the U.S. International Development Cooperation Agency (''IDCA''). Under the provisions of the Foreign Affairs Reform and Restructuring Act of 1998, IDCA was abolished and USAID was established as an Executive agency, effective April 1, 1999.

DATES: Effective April 1, 1999.

FOR FURTHER INFORMATION CONTACT: Jan Miller, Office of General Counsel, 202–712–4174; jmiller @usaid.gov.

SUPPLEMENTARY INFORMATION: Under the provisions of the Foreign Affairs Reform and Restructuring Act of 1998, as contained in Public Law 105–277, IDCA was abolished and USAID was established as an Executive agency, effective April 1, 1999.

The abolition of IDCA does not affect the status and validity of USAID regulations, directives, rulings, policies; they continue in effect.

This is a procedural rule exempt from notice and comment under 5 U.S.C. 533(b)(3)(a). This rule is not a significant rule for purposes of Executive Order 12866 and has not been reviewed by the Office of Management and Budget. This rule does not have a significant impact on small business entities under the Regulatory Flexibility Act.

For the reasons set forth in the preamble and under the authority of 22 U.S.C. 2381, revise the heading of chapter II of title 22 of the Code of Federal Regulations to read as follows:

CHAPTER II—AGENCY FOR INTERNATIONAL DEVELOPMENT

Singleton B. McAllister,

General Counsel.

[FR Doc. 99–7968 Filed 3–31–99; 8:45 am]

BILLING CODE 6116–01–M

ARMS CONTROL AND DISARMAMENT AGENCY

22 CFR Chapter VI

Repeal of the Arms Control and Disarmament Agency's Regulations

AGENCY: Arms Control and Disarmament Agency.

ACTION: Final rule.

SUMMARY: Pursuant to the consolidation of the Arms Control and Disarmament Agency (''ACDA'') and the Department of State as mandated by the Foreign Affairs Agencies Consolidation Act of 1998, this rule repeals ACDA's public regulations in the Code of Federal Regulations (CFR).

DATES: Effective April 1, 1999.

FOR FURTHER INFORMATION CONTACT: Mary Elizabeth Hoinkes, (202)–647–4621.

SUPPLEMENTARY INFORMATION: In order to avoid having duplicative regulations after ACDA is consolidated with the Department of State pursuant to the Foreign Affairs Agencies Consolidation Act of 1998, Public Law 105–277, this rule repeals ACDA's public regulations, which appear in 22 CFR Chapter VI, upon the abolition of ACDA under the Act. This repeal shall take effect in accordance with the savings provisions at Section 1615(b)–(f) of the Act.

This rule involves agency management functions and, therefore, is not subject to the procedures required by 5 U.S.C 553 and 801. It is also exempt from review under Executive Order 12866 but has been reviewed internally by ACDA to ensure consistency with the purposes thereof. This amendment has been found to be a minor rule within the meaning of the Small Business Regulatory Enforcement Fairness Act of 1996, Public Law 104–121. It does not require analysis under the Regulatory Flexibility Act or the Unfunded Mandates Reform Act.

List of Subjects

22 CFR Part 601

Organization and functions (Government agencies).

22 CFR Part 602

Freedom of information.

22 CFR Part 603

Privacy.

22 CFR Part 604

Claims.

22 CFR Part 605

Classified information.

22 CFR Part 606

Conflict of interests.

22 CFR Part 607

Administrative practice and procedure, Civil rights, Equal employment opportunity, Federal buildings and facilities, Individuals with disabilities.

22 CFR Part 608

Administrative practice and procedure, Courts, Government employees.

Accordingly, for the reasons set forth above, upon the abolition of ACDA under Public Law 105–277, Parts 601 through 608 of Title 22, Code of Federal Regulations are hereby removed and chapter VI of Title 22 is vacated.

Dated: March 29, 1999.

John D. Holum,

Director, U.S. Arms Control and Disarmament Agency.

[FR Doc. 99–8129 Filed 3–31–99; 8:45 am]

BILLING CODE 6820–32–M

DEPARTMENT OF THE TREASURY

Internal Revenue Service

26 CFR Part 1

[TD 8817]

RIN 1545–AV70

Notice of Certain Transfers to Foreign Partnerships and Foreign Corporations; Correction

AGENCY: Internal Revenue Service (IRS), Treasury.

ACTION: Correction to final regulations.

SUMMARY: This document contains corrections to final income tax regulations that were published in the **Federal Register** on Friday, February 5, 1999 (64 FR 5713) relating to certain transfers to foreign partnerships and corporations by U.S. persons.

DATES: This correction is effective February 5, 1999.

FOR FURTHER INFORMATION CONTACT: Eliana Dolgoff (202)622–3860 (not a toll-free number).

SUPPLEMENTARY INFORMATION:

Background

The final regulations that are the subject of this correction are under section 6038B of the Internal Revenue Code.

Need for Correction

As published, the final regulations contain errors that may prove to be misleading and are in need of clarification.

Correction of Publication

Accordingly, the publication of the final regulations (TD 8817), that were the subject of FR Doc. 99–2798, is corrected as follows:

§ 1.6038B–1 [Corrected]

1. On page 5715, column 1, amendatory instruction Par. 2, instruction 2. is corrected to read ''2. In paragraph (b)(1)(i), the first sentence is removed and two new sentences are added in its place.''.

1a. On page 5715, column 1, § 1.6038B–1(b)(1)(i), lines 4 through 7, the language ''paragraph (b)(2) of this section, or cash, which is subject to special rules contained in paragraph (b)(3) of this section, any U.S. person that makes a'' is corrected to read ''paragraph (b)(2) of this section, any U.S. person that makes a''. 1b. On page 5715, column 1, in § 1.6038B–1(b)(1)(i), a new sentence is added after the first sentence to read ''For special rules regarding cash transfers made in tax years beginning after February 5, 1999, see paragraphs (b)(3) and (g) of this section.''.

2. On page 5715, column 1, § 1.6038B–1(b)(3) introductory text, line 2, the language ''foreign corporation must report the'' is corrected to read ''foreign corporation in a transfer described in section 6038B(a)(1)(A) must report the''.

3. On page 5715, column 2, § 1.6038B–1(c), line 6, the language ''section 6038B(a)(1)(A) (including cash'' is corrected to read ''section 6038B(a)(1)(A) (including cash transferred in taxable years beginning after February 5, 1999,''.

4. On page 5715, column 2, § 1.6038B–1(g), lines 3 through 8, the language ''July 20, 1998, except that the first sentence of paragraph (b)(1)(i), paragraph (b)(3), and the first sentence of paragraph (c) apply to transfers occurring in taxable years beginning after February 5, 1999. See § 1.6038B-'' is corrected to read ''July 20, 1998, except that transfers of cash made in taxable years beginning on or before February 5, 1999 are not required to be reported under section 6038B. See § 1.6038B-''.

§ 1.6038B–2 [Corrected]

5. On page 5717, column 2, § 1.6038B–2(j)(1)(ii) line 1, the language, ''Filing a Form 926 with the'' is corrected to read ''Filing a Form 926 (modified to reflect that the transferee is

a partnership, not a corporation) with the''.

Cynthia E. Grigsby,

Chief, Regulations Unit, Assistant Chief Counsel (Corporate).

[FR Doc. 99–7793 Filed 3–31–99; 8:45 am]

BILLING CODE 4830–01–U

DEPARTMENT OF THE TREASURY

Internal Revenue Service

26 CFR Parts 1, 7, and 602

[TD 8770]

RIN 1545–AP81 and 1545–AI32

Certain Transfers of Stock or Securities by U.S. Persons to Foreign Corporations and Related Reporting Requirements; Correction

AGENCY: Internal Revenue Service (IRS), Treasury.

ACTION: Correction to final regulations.

SUMMARY: This document contains corrections to Treasury Decision 8770, which was published in the **Federal Register** on Friday, June 19, 1998 (63 FR 33550) relating to certain transfers of stock or securities by U.S. persons to foreign corporations pursuant to the corporate organization and reorganization provisions of the Internal Revenue Code, and the reporting requirements related to such transfers.

DATES: These corrections are effective July 20, 1998.

FOR FURTHER INFORMATION CONTACT: Philip L. Tretiak, (202) 622–3860 (not a toll-free number).

SUPPLEMENTARY INFORMATION:

Background

The final regulations that are the subject of these corrections are under sections 367 and 6038B of the Internal Revenue Code.

Need for Correction

As published, TD 8770 contains errors which may prove to be misleading and are in need of clarification.

Correction of Publication

Accordingly, the publication of the final regulations (TD 8770), which was the subject of FR Doc. 98–15454, is corrected as follows:

1. On page 33555, column 2, in the preamble under the paragraph heading ''Effective Dates'', line 19, the language ''a United States shareholder but does'' is corrected to read ''a United States shareholder but does not''.

§ 1.367(a)–3 [Corrected]

2. On page 33556, column 1, § 1.367(a)–3(a), lines 22 through 24, the language ''a U.S. person exchanges stock of one foreign corporation for stock of another foreign corporation in a reorganization'' is corrected to read ''a U.S. person exchanges stock of a foreign corporation in a reorganization''.

3. On page 33556, column 1, § 1.367(a)–3(a), line 27, the language ''domestic corporation for stock of a'' is corrected to read ''domestic or foreign corporation for stock of a''.

4. On page 33559, column 1, § 1.367(a)–3(d)(3), paragraph (ii) of *Example 6*, line 10, the language ''§ 1.367(a)–8(g)(3)(i) (which includes the'' is corrected to read § 1.367(a)–8(g)(3) (which includes the''.

§ 1.367(b)–4 [Corrected]

5. On page 33568, column 1, § 1.367(b)–4(b)(5)(i), line 4, the language ''transaction described in paragraph (b)(1)'' is corrected to read ''transaction described in paragraph (a)''.

6. On page 33568, column 2, § 1.367(b)–4(b)(5)(ii), paragraph (ii) of the *Example*, line 2, the language ''an exchange described in paragraph (b) of'' is corrected to read ''an exchange described in paragraph (a) of''.

§ 1.6038B–1 [Corrected]

7. On page 33569, column 1, § 1.6038B–1(b)(2)(i) introductory text, line 4, the language ''in section 6038(a)(1)(A) will be'' is corrected to read ''in section 6038B(a)(1)(A) will be''.

Cynthia E. Grigsby,

Chief, Regulations Unit, Assistant Chief Counsel (Corporate).

[FR Doc. 99–7792 Filed 3–31–99; 8:45 am]

BILLING CODE 4830–01–U '

DEPARTMENT OF THE TREASURY

Internal Revenue Service

26 CFR Parts 31 and 602

[TD 8814]

RIN 1545–AF97

Federal Insurance Contributions Act (FICA) Taxation of Amounts Under Employee Benefit Plans; Correction

AGENCY: Internal Revenue Service (IRS), Treasury.

ACTION: Correction to final regulations.

SUMMARY: This document contains corrections to Treasury Decision 8814, which was published in the **Federal Register** on Friday, January 29, 1999 (64 FR 4542) that provides guidance as to when amounts deferred under or paid from a nonqualified deferred compensation plan are taken into account as wages for purposes of the employment taxes imposed by the Federal Insurance Contributions Act (FICA).

DATES: This correction is effective January 29, 1999.

FOR FURTHER INFORMATION CONTACT: Janine Cook, Linda E. Alsalihi, or Margaret Owens, (202) 622–6040 (not a toll-free number).

SUPPLEMENTARY INFORMATION:

ground

The final regulations that are the subject of these corrections are under section 3121 of the Internal Revenue Code.

Need for Correction

As published, TD 8814 contains errors which may prove to be misleading and are in need of clarification.

Correction of Publication

Accordingly, the publication of the final regulations (TD 8814), which were the subject of FR Doc. 99–1663, is corrected as follows:

1. On page 4542, column 1, in the regulation heading, line 5, the language ''RIN 1545–AT27'' is corrected to read ''RIN 1545–AF97''.

§ 31.3121(v)(2)–1 [Corrected]

2. On page 4550, column 3, § 31.3121(v)(2)–1(b)(5), paragraph (i) of *Example 10*, line 9, the language ''employee's designated beneficiary in a single'' is corrected to read ''employee's designated beneficiary in a single lump''.

3. On page 4551, column 1, § 31.3121(v)(2)–1(b)(5), paragraph (ii) of *Example 10*, line 3 from the bottom of the paragraph, the language ''payable in the event of the Employee E's'' is corrected to read ''payable in the event of Employee E's''.

4. On page 4551, column 1, § 31.3121(v)(2)–1(b)(5), paragraph (ii) of *Example 11*, line 4 from the bottom of the paragraph, the language ''E under the plan during the Employee E's'' is corrected to read ''E under the plan during Employee E's''.

5. On page 4566, column 3, § 31.3121(v)(2)–1(g)(5), paragraph (i) of *Example 8*, line 14, the language ''Based Employer R's estimate that Employee'' is corrected to read ''Based on Employer R's estimate that Employee''.

6. On page 4566, column 3, § 31.3121(v)(2)–1(g)(5), paragraph (i) of *Example 8*, line 5 from the bottom of the paragraph, the language ''which Employee R has a legally binding right''

is corrected to read ''which Employee F has a legally binding right''.

Cynthia E. Grigsby,

Chief, Regulations Unit, Assistant Chief Counsel (Corporate).

[FR Doc. 99–7791 Filed 3–31–99; 8:45 am]

BILLING CODE 4830–01–U

DEPARTMENT OF THE TREASURY

Internal Revenue Service

26 CFR Part 602

[TD 8011]

OMB Control Numbers Assigned Pursuant to the Paperwork Reduction Act; Correction

AGENCY: Internal Revenue Service (IRS), Treasury.

ACTION: Correcting amendment.

SUMMARY: This document contains corrections to final regulations (TD 8011), which were published in the **Federal Register** on Thursday, March 14, 1985 (50 FR 10221) relating to the displaying of OMB control numbers on this agency's regulations that solicit or obtain information from the public.

DATES: This correction is effective November 12, 1996.

FOR FURTHER INFORMATION CONTACT: Marshall Feiring, (202) 622–3940, (not a toll-free number).

SUPPLEMENTARY INFORMATION:

Background

The final regulations that are the subject of these corrections displays this agency's control numbers and implemented requirements of regulations promulgated by the Office of Management and Budget pursuant to the Paperwork Reduction Act of 1980.

Need for Correction

As published, final regulations (TD 8011) contain errors which may prove to be misleading and are in need of clarification.

List of Subjects in 26 CFR Part 602

Reporting and recordkeeping requirements.

Correcting Amendment to Regulations

Accordingly, 26 CFR part 602 is corrected by making the following correcting amendments:

PART 602—OMB CONTROL NUMBERS UNDER THE PAPERWORK REDUCTION ACT

Paragraph 1. The authority citation for part 602 continues to read as follows:

Authority: 26 U.S.C. 7805.

§ 602.101 [Corrected]

Par. 2. In § 602.101, paragraph (a), second sentence, the language ''(together with 26 CFR 601.9000)'' is removed.

Par. 3. In § 602.101, paragraph (b) is removed and paragraph (c) is redesignated as paragraph (b).

Cynthia E. Grigsby,

Chief, Regulations Unit, Assistant Chief Counsel (Corporate).

[FR Doc. 99–7823 Filed 3–31–99; 8:45 am]

BILLING CODE 4830–01–U

ENVIRONMENTAL PROTECTION AGENCY

40 CFR Part 52

[MO 067–1067a; FRL–6315–9]

Approval and Promulgation of Implementation Plans; State of Missouri

AGENCY: Environmental Protection Agency (EPA).

ACTION: Direct final rule.

SUMMARY: EPA is announcing direct final approval of revisions to Missouri's Open Burning Rule (10 CSR 10–3.030) and Sampling Methods Rule (10 CSR 10–6.030) as an amendment to the Missouri State Implementation Plan (SIP). This action will update the SIP rules to include revisions which add sampling methods and otherwise improve the clarity of the rules.

DATES: This direct final rule is effective on June 1, 1999 without further notice, unless EPA receives adverse comment by May 3, 1999. If adverse comment is received, EPA will publish a timely withdrawal of the direct final rule in the **Federal Register** and inform the public that the rule will not take effect.

ADDRESSES: All comments should be addressed to Joshua A. Tapp at the Environmental Protection Agency, Air Planning and Development Branch, 726 Minnesota Avenue, Kansas City, Kansas 66101.

Copies of the state submittals are available at the following addresses for inspection during normal business hours: Environmental Protection Agency, Air Planning and Development Branch, 726 Minnesota Avenue, Kansas City, Kansas 66101; and the Environmental Protection Agency, Air and Radiation Docket and Information Center, Air Docket (6102), 401 M Street, SW, Washington, D.C. 20460.

FOR FURTHER INFORMATION CONTACT: Joshua A. Tapp at (913) 551–7606.

SUPPLEMENTARY INFORMATION:

What Is an SIP?

Section 110 of the Clean Air Act (CAA) requires states to develop air pollution regulations and control strategies to ensure that state air quality meets the national ambient air quality standards established by EPA. These ambient standards are established under section 109 of the CAA, and they currently address six criteria pollutants. These pollutants are: carbon monoxide, nitrogen dioxide, ozone, lead, particulate matter, and sulfur dioxide.

Each state must submit these regulations and control strategies to EPA for approval and incorporation into the Federally enforceable SIP.

The CAA requires each state to have a Federally approved SIP which protects air quality primarily by addressing air pollution at its point of origin. These SIPs can be extensive, containing state regulations or other enforceable documents and supporting information such as emission inventories, monitoring networks, and modeling demonstrations.

What Is the Federal Approval Process for an SIP?

In order for state regulations to be incorporated into the Federally enforceable SIP, states must formally adopt the regulations and control strategies consistent with state and Federal requirements. This process generally includes a public notice, public hearing, public comment period, and a formal adoption by a state-authorized rulemaking body.

Once a state rule, regulation, or control strategy is adopted, the state submits it to EPA for inclusion into the SIP. EPA must provide public notice and seek additional public comment regarding the proposed Federal action on the state submission. If adverse comments are received, they must be addressed prior to any final Federal action by EPA.

All state regulations and supporting information approved by EPA under section 110 of the CAA are incorporated into the Federally approved SIP. Records of such SIP actions are maintained in the Code of Federal Regulations (CFR) at Title 40, Part 52 entitled ''Approval and Promulgation of Implementation Plans.'' The actual state regulations which are approved are not reproduced in their entirety in the CFR but are incorporated by reference, which means that EPA has approved a given state regulation with a specific effective date.

What Does Federal Approval of a State Regulation Mean to Me?

Enforcement of the state regulation before and after it is incorporated into the Federally approved SIP is primarily a state responsibility. However, after the regulation is Federally approved, EPA is authorized to take enforcement action against violators. Citizens are also offered legal recourse to address violators as described in the CAA.

What Is Being Addressed in This Document?

On November 13, 1998, the Missouri Department of Natural Resources (MDNR) submitted revisions to rule 10 CSR 10–3.030 entitled ''Open Burning Restrictions.'' A public hearing was held on the revisions to this rule on March 26, 1998. Following a response to comments, the Missouri Air Conservation Commission (MACC) adopted these revisions on April 30, 1998, and they became effective on August 30, 1998.

On December 7, 1998, the MDNR submitted revisions to rule 10 CSR 10–6.030 entitled ''Sampling Methods for Air Pollution Sources.'' A public hearing was held on the revisions to this rule on June 25, 1998. No comments were submitted. Consequently, on July 30, 1998, the MACC adopted these revisions, and on November 30, 1998, they became effective.

In each of its submittal letters, MDNR has requested that EPA revise the Missouri SIP to include the changes incorporated into these rules.

The three most significant revisions incorporated by MDNR into rule 10 CSR 10–3.030 include: (1) A consolidation of the open burning restriction provisions into one section; (2) a new provision that requires certain sources which obtain a permit to conduct open burning to utilize an air curtain destructor; and (3) revisions which allow open burning during emergency response situations, to protect human health or for authorized natural resource management. It should be noted that this rule pertains to out-state Missouri only. It does not include Kansas City, St. Louis, or Springfield.

Missouri has made two basic types of revisions to rule 10 CSR 10–6.030 relating to reference sampling methods. The first type of revision is to clarify the meaning and intent of the reference method citations by making non-substantive word changes. The second type of revision that was made was to add certain Federal reference sampling methods to the Missouri rule.

Specifically, two test methods were added to the rule during this revision. MDNR has added the Federal reference test method for condensible particulate matter (method 202) to Subsection (5)(E). MDNR has also added the Federal reference test method for visible emissions (method 22) to Subsection (9)(B).

What Action Is Being Taken by EPA?

MDNR submitted the Out-State Open Burning Rule (10 CSR 10–3.030) and the Sampling Methods Rule (10 CSR 10–6.030) for incorporation into the Federally approved SIP on November 13, 1998, and on December 7, 1998, respectively.

EPA has reviewed these submittals which consolidate rule language, clarify rule language, and add Federal reference sampling methods. These submittals meet applicable statutory, regulatory, and policy guidelines.

EPA is therefore taking direct final action to approve these rule revisions as amendments to the Missouri SIP.

EPA is publishing this rule without prior proposal, because the Agency views this as a noncontroversial submittal and anticipates no adverse comments. However, in the proposed rules section of this **Federal Register** publication, EPA is publishing a separate document that will serve as the proposal to approve the SIP revision should adverse comments be filed. This rule will be effective June 1, 1999 without further notice unless the Agency receives adverse comments by May 3, 1999.

If EPA receives such comments, then EPA will publish a document withdrawing the final rule and informing the public that the rule will not take effect. All public comments received will then be addressed in a subsequent final rule based on the proposed rule. EPA will not institute a second comment period. Parties interested in commenting should do so at this time. If no such comments are received, the public is advised that this rule will be effective on June 1, 1999 and no further action will be taken on the proposed rule.

Administrative Requirements

A. Executive Order (E.O.) 12866

The Office of Management and Budget (OMB) has exempted this regulatory action from E.O. 12866, entitled ''Regulatory Planning and Review.''

B. E.O. 12875

Under E.O. 12875, Enhancing the Intergovernmental Partnership, EPA may not issue a regulation that is not required by statute and that creates a mandate upon a state, local, or tribal government unless the Federal government provides the funds necessary to pay the direct compliance costs incurred by those governments or EPA consults with those governments. If EPA complies by consulting, E.O. 12875 requires EPA to provide to the OMB a description of the extent of EPA's prior consultation with representatives of affected state, local, and tribal governments, the nature of their concerns, copies of any written communications from the governments, and a statement supporting the need to issue the regulation. In addition, E.O. 12875 requires EPA to develop an effective process permitting elected officials and other representatives of state, local, and tribal governments ''to provide meaningful and timely input in the development of regulatory proposals containing significant unfunded mandates.''

Today's rule does not create a mandate on state, local, or tribal governments. The rule does not impose any enforceable duties on these entities. Accordingly, the requirements of section 1(a) of E.O. 12875 do not apply to this rule.

C. E.O. 13045

Protection of Children from Environmental Health Risks and Safety Risks (62 FR 19885, April 23, 1997) applies to any rule that: (1) Is determined to be ''economically significant'' as defined under E.O. 12866 and (2) concerns an environmental health or safety risk that EPA has reason to believe may have a disproportionate effect on children. If the regulatory action meets both criteria, the Agency must evaluate the environmental health or safety effects of the planned rule on children and explain why the planned regulation is preferable to other potentially effective and reasonably feasible alternatives considered by the Agency.

This rule is not subject to E.O. 13045, because it is not an economically significant regulatory action as defined by E.O. 12866 and does not concern an environmental health or safety risk that EPA has reason to believe may have a disproportionate effect on children.

D. E.O. 13084

Under E.O. 13084, Consultation and Coordination with Indian Tribal Governments, EPA may not issue a regulation that is not required by statute, that significantly or uniquely affects the communities of Indian tribal governments, and that imposes substantial direct compliance costs on those communities, unless the Federal government provides the funds

necessary to pay the direct compliance costs incurred by the tribal governments or EPA consults with those governments. If EPA complies by consulting, E.O. 13084 requires EPA to provide to the OMB, in a separately identified section of the preamble to the rule, a description of the extent of EPA's prior consultation with representatives of affected tribal governments, a summary of the nature of their concerns, and a statement supporting the need to issue the regulation. In addition, E.O. 13084 requires EPA to develop an effective process permitting elected officials and other representatives of Indian tribal governments ''to provide meaningful and timely input in the development of regulatory policies on matters that significantly or uniquely affect their communities.'' This action does not significantly or uniquely affect tribal communities, so E.O. 13084 does not apply.

E. Regulatory Flexibility Act

The Regulatory Flexibility Act generally requires an agency to conduct a regulatory flexibility analysis of any rule subject to notice and comment rulemaking requirements, unless the agency certifies that the rule will not have a significant economic impact on a substantial number of small entities. Small entities include small businesses, small not-for-profit enterprises, and small governmental jurisdictions. This final rule will not have a significant impact on a substantial number of small entities, because SIP approvals under section 110 and Subchapter I, Part D of the CAA do not create any new requirements but simply approve requirements that the state is already imposing. Therefore, because the Federal SIP approval does not create any new requirements, I certify that this action will not have a significant economic impact on a substantial number of small entities. Moreover, due to the nature of the Federal-state relationship under the CAA, preparation of flexibility analysis would constitute Federal inquiry into the economic reasonableness of state action. The CAA forbids EPA to base its actions concerning SIPs on such grounds. *Union Electric Co.,* v. *U.S. EPA*, 427 U.S. 246, 255–66 (1976); 42 U.S.C. 7410(a)(2).

F. Unfunded Mandates

Under section 202 of the Unfunded Mandates Reform Act of 1995 (''Unfunded Mandates Act''), signed into law on March 22, 1995, EPA must prepare a budgetary impact statement to accompany any proposed or final rule that includes a Federal mandate that may result in estimated annual costs to state, local, or tribal governments in the aggregate; or to private sector, of $100 million or more. Under section 205, EPA must select the most cost-effective and least burdensome alternative that achieves the objectives of the rule and is consistent with statutory requirements. Section 203 requires EPA to establish a plan for informing and advising any small governments that may be significantly or uniquely impacted by the rule.

EPA has determined that the approval action promulgated does not include a Federal mandate that may result in estimated annual costs of $100 million or more to either state, local, or tribal governments in the aggregate, or to the private sector. This Federal action approves pre-existing requirements under state or local law and imposes no new requirements. Accordingly, no additional costs to state, local, or tribal governments, or to the private sector, result from this action.

G. Submission to Congress and the Comptroller General

The Congressional Review Act, 5 U.S.C. 801 *et seq.*, as added by the Small Business Regulatory Enforcement Fairness Act of 1996, generally provides that before a rule may take effect, the agency promulgating the rule must submit a rule report, which includes a copy of the rule, to each House of the Congress and to the Comptroller General of the United States. EPA will submit a report containing this rule and other required information to the U.S. Senate, the U.S. House of Representatives, and the U.S. Comptroller General prior to publication of the rule in the **Federal Register**. This rule is not a ''major rule'' as defined by 5 U.S.C. 804(2).

H. Petitions for Judicial Review

Under section 307(b)(1) of the CAA, petitions for judicial review of this action must be filed in the United States Court of Appeals for the appropriate circuit by June 1, 1999. Filing a petition for reconsideration by the Administrator of this final rule does not affect the finality of this rule for the purposes of judicial review, nor does it extend the time within which a petition for judicial review may be filed, and shall not postpone the effectiveness of such rule or action. This action may not be challenged later in proceedings to enforce its requirements. [See section 307(b)(2).]

List of Subjects in 40 CFR Part 52

Environmental protection, Air pollution control, Carbon monoxide, Hydrocarbons, Incorporation by reference, Nitrogen dioxide, Ozone, Particulate matter, Reporting and recordkeeping requirements, Volatile organic compounds.

Dated: March 16, 1999.

Dennis Grams,

Regional Administrator, Region VII.

Part 52, Chapter I, Title 40 of the Code of Federal Regulations is amended as follows:

PART 52—[AMENDED]

1. The authority citation for Part 52 continues to read as follows:

Authority: 42 USC 7401–7671q.

Subpart AA—Missouri

2. Section 52.1320 is amended by adding new paragraph (c)(112) to read as follows:

§ 52.1320 Identification of plan.

* * * * *

(c) * * *

(112) Revisions submitted on November 13, 1998, and December 7, 1998, by the MDNR that modify Missouri's Out-state Open Burning Rule and add sampling methods to Missouri's Sampling Method Rule, respectively.

(i) Incorporation by reference:

(A) Revisions to Missouri rule 10 CSR 10–3.030 entitled ''Open Burning Restrictions,'' effective August 30, 1998.

(B) Revisions to Missouri rule 10 CSR 10–6.030 entitled ''Sampling Methods for Air Pollution Sources,'' effective November 30, 1998.

[FR Doc. 99–7905 Filed 3–31–99; 8:45 am]

BILLING CODE 6560–50–P

DEPARTMENT OF LABOR

Office of Federal Contract Compliance Programs

41 CFR Parts 60–250 and 60–999

Affirmative Action and Nondiscrimination Obligations of Contractors and Subcontractors Regarding Special Disabled Veterans and Vietnam Era Veterans; OMB Control Numbers for OFCCP Information Collection Requirements

AGENCY: Office of Federal Contract Compliance Programs (OFCCP), Labor.

ACTION: Final rule.

SUMMARY: This rule informs the public that the Office of Management and Budget (OMB) has approved, under the Paperwork Reduction Act of 1995 (PRA), the collection of information requirements contained in the OFCCP

rule published on November 4, 1998, which revised the regulations implementing the affirmative action provisions of the Vietnam Era Veterans' Readjustment Assistance Act of 1974, as amended (VEVRAA). OMB has approved of these revisions under existing PRA control numbers. This rule republishes the table of OMB central numbers in the Code of Federal Regulations.

DATES: This rule is effective April 1, 1999. Information collection requirements contained in the final rule which revised part 60–250 published at 63 FR 59630 have been approved by OMB and must be complied with as of April 1, 1999.

FOR FURTHER INFORMATION CONTACT: James I. Melvin, Director, Division of Policy, Planning, and Program Development, Office of Federal Contract Compliance Programs, Room N3424, 200 Constitution Avenue, NW, Washington DC 20210. Telephone: (202) 693–0102 (voice). Copies of this rule in alternate formats may be obtained by calling OFCCP at (202) 693–0102 (voice). The alternate formats available are large print, an electronic file on computer disk and audiotape. This document also is available on the Internet at http://www.dol.gov/dol/esa.

SUPPLEMENTARY INFORMATION:

Paperwork Reduction Act Approval

On November 4, 1998, OFCCP published a final rule (63 FR 59630) revising its regulations at 41 CFR part 60–250 implementing the affirmative action provisions of the Vietnam Era Veterans' Readjustment Assistance Act of 1974, as amended, 38 U.S.C. 4212 (VEVRAA). VEVRAA requires Government contractors and subcontractors to take affirmative action to employ and advance in employment qualified special disabled veterans, veterans of the Vietnam era, and other designated veterans.

OFCCP reviewed the collection of information aspects of the rule in accordance with the PRA and OMB implementing regulations published at 5 CFR part 1320. OFCCP believes that the rule will not result in an increase in paperwork burdens from what was previously required by the OFCCP regulations. In accordance with the PRA, OFCCP submitted to OMB the information collection requirements contained in the rule. OMB approved the information collection requirements in the rule as revisions to existing PRA control numbers 1215–0163 (Construction) and 1215–0072 (Supply and Service).

In accordance with OMB recommendations, 5 CFR 1320.3(f)(3), OFCCP publishes a single table in 41 CFR part 60–999 that lists the OMB-assigned control numbers for information collection requirements contained in OFCCP rules. The list of OMB-assigned control numbers published at 41 CFR Part 60–999 is republished and remains unchanged.

List of Subjects in 41 CFR Part 60–999

Reporting and recordkeeping requirements.

Signed at Washington, D.C. this 25th day of March, 1999.

Bernard E. Anderson,

Assistant Secretary for Employment Standards

Shirley J. Wilcher,

Deputy Assistant Secretary for Federal Contract Compliance.

Part 60–999 of title 41 of the Code of Federal Regulations is hereby amended as follows:

PART 60–999—[AMENDED]

1. The authority citation for part 60–999 continues to read as follows:

Authority: 44 U.S.C. Ch. 35.

2. Section 60–999.2 is republished further convenience of the reader to read follows:

§ 60–999.2 Display.

41 CFR Part where the information collection requirement is located	Current OMB control No.
Part 60–1	1215–0072, 1215–0131, 1215–0163.
Part 60–2	1215–0072.
Part 60–3	3046–0017
Part 60–4	1215–0163.
Part 60–20	1215–0072, 1215–0163.
Part 60–30	1215–0072, 1215–0163.
Part 60–40	1215–0072, 1215–0163.
Part 60–50	1215–0072, 1215–0163.
Part 60–250	1215–0072, 1215–0131, 1215–0163.
Part 60–741	1215–0072, 1215–0131, 1215–0163.

[FR Doc. 99–7835 Filed 3–31–99; 8:45 am]

BILLING CODE 4510–27–M

DEPARTMENT OF THE INTERIOR

Fish and Wildlife Service

50 CFR Part 17

RIN 1018–AE38

Endangered and Threatened Wildlife and Plants; Final Rule To List the Flatwoods Salamander as a Threatened Species

AGENCY: Fish and Wildlife Service, Interior.

ACTION: Final rule.

SUMMARY: We, the Fish and Wildlife Service, determine the flatwoods salamander (*Ambystoma cingulatum*) to be a threatened species under the authority of the Endangered Species Act of 1973, as amended (Act). This salamander occurs in isolated populations scattered across the lower southeastern Coastal Plain in Florida, Georgia, and South Carolina. Habitat loss and degradation from agriculture, urbanization, and silvicultural practices have resulted in the loss of more than 80 percent of its pine flatwoods habitat. Surviving populations are currently threatened by the continued destruction and degradation of their habitat. This action extends the protection of the Act for the flatwoods salamander.

EFFECTIVE DATE: May 3, 1999.

ADDRESSES: The complete administrative file for this rule is available for inspection, by appointment, during normal business hours at the U.S. Fish and Wildlife Service, Jackson Field Office, 6578 Dogwood View Parkway, Jackson, Mississippi 39213.

FOR FURTHER INFORMATION CONTACT: Ms. Linda LaClaire at the above address, or telephone 601/965–4900, extension 26; facsimile 601/965–4340.

SUPPLEMENTARY INFORMATION:

Background

The earliest reference to the flatwoods salamander, *Ambystoma cingulatum*, was by Cope in 1867 from specimens he collected in Jasper County, South Carolina (referenced in Martof 1968). This salamander is a member of the family Ambystomatidae, the mole salamanders, which contains 15 North American species. Shaffer *et al.* 1991, conducted a phylogenetic (evolutionary history or genealogy) analysis of ambystomatid salamanders and determined that the flatwoods salamander is most closely related to the ringed salamander (*A. annulatum*), which occurs in portions of Arkansas, Missouri, and Oklahoma.

The flatwoods salamander is a slender, small-headed mole salamander that rarely exceeds 13 centimeters (cm) (approximately 5 inches (in)) in length when fully mature (Means 1986, Conant and Collins 1991, Ashton 1992). Adult dorsal color ranges from black to chocolate-black with highly variable, fine, light gray lines forming a netlike or cross-banded pattern across the back (Palis 1996). Undersurfaces are plain gray to black with a few creamy or pearl-gray blotches or spots. Sexual dimorphism (the existence of separable male and female forms) is only apparent in breeding males (swollen cloacal region) or in gravid (with fertilized eggs) females. Adults most closely resemble Mabee's salamander, *A. mabeei,* with which it shares part of its range in South Carolina (Martof 1968). Mabee's salamanders are often more brownish; have light flecking concentrated on their sides rather than the overall pattern of the flatwoods salamander; and have a single row of jaw teeth as opposed to multiple rows in the flatwoods salamander (Conant and Collins 1991).

Flatwoods salamander larvae are long and slender, broad-headed and bushy-gilled, with white bellies and striped sides (Means 1986, Ashton 1992, Palis 1995d). They have distinctive color patterns, typically a tan mid-dorsal (middle of upper surface) stripe followed by a grayish black dorsolateral (back and sides) stripe, a pale cream mid-lateral (side) stripe, a blue-black lower lateral stripe, and a pale yellow ventrolateral (belly) stripe (Palis 1995d). The head has a dark brown stripe passing through the eye from the nostril to the gills (Means 1986).

Optimum habitat for the flatwoods salamander is an open, mesic (moderate moisture) woodland of longleaf/slash pine (*Pinus palustris/P. elliottii*) flatwoods maintained by frequent fires. Pine flatwoods are typically flat, low-lying open woodlands that lie between the drier sandhill community upslope and wetlands down slope (Wolfe *et al.* 1988). An organic hardpan, 0.3 to 0.7 meters (m) (1 to 2 feet (ft)) into the soil profile, inhibits subsurface water penetration and results in moist soils with water often at or near the surface (Wolfe *et al.* 1988). Historically, longleaf pine generally dominated the flatwoods with slash pine restricted to the wetter areas (Wolfe *et al.* 1988). Wiregrasses (*Aristida* sp.), especially *A. beyrichiana,* are often the dominant grasses in the herbaceous (non-woody) ground cover (Wolfe *et al.* 1988). The ground cover supports a rich herbivorous invertebrate community that serves as a food source for the flatwoods salamander.

Adult and subadult flatwoods salamanders are fossorial (adapted for living underground) (Mount 1975). They enlarge crayfish burrows (Ashton 1992) or build their own. Captive flatwoods salamanders have been observed digging burrows and resting at night with just the tip of their heads exposed (Goin 1950). Preliminary data indicate that flatwoods salamander males first breed at 1 year of age and females at 2 years of age (Palis 1996). There are no data on survivorship by age class for the species. The longevity record for their close relative, *A. annulatum,* is 4 years, 11 months; however, many Ambystomatidae live 10 years or longer (Snider and Bowler 1992). An adult female flatwoods salamander has been maintained in captivity for 4 years, 4 months (R. Ashton pers. comm. 1998).

Adult flatwoods salamanders move to their wetland breeding sites during rainy weather, in association with cold fronts, from October to December (Palis 1997a). Breeding sites are isolated (not connected to any other water body) pond cypress (*Taxodium ascendens*), blackgum (*Nyssa sylvatica* var. *biflora*), or slash pine dominated depressions which dry completely on a cyclic basis. They are generally shallow and relatively small. Breeding sites in Florida have a mean size of 1.49 hectares (ha) (3.68 acres (ac)) and a mean depth of less than 39.2 cm (15.4 in) (Palis 1997b). These wetlands have a marsh-like appearance with sedges often growing throughout and wiregrasses (*Aristida* sp.), panic grasses (*Panicum* spp.), and other herbaceous species concentrated in the shallow water edges. Trees and shrubs grow both in and around the ponds. A relatively open canopy is necessary to maintain the herbaceous component, which serves as cover for flatwoods salamander larvae and their aquatic invertebrate prey. Sekerak *et al.* 1996, did not capture flatwoods salamander larvae in sample plots with a high proportion of detritus (loose material from the disintegration of rocks and organic material) or open water in a study on the Apalachicola National Forest in Florida. Ponds typically have a burrowing crayfish fauna (genus *Procambarus*) and a diverse macroinvertebrate fauna, but lack large predatory fish (e.g., *Lepomis* (sunfish), *Macropterus* (bass), *Amia calva* (bowfin)).

Before the breeding sites become flooded, the males and females court. The females lay their eggs (singly or in clumps) beneath leaf litter, under logs and sphagnum moss (grows in wet acid areas) mats, or at bases of bushes, small trees, or clumps of grass (Anderson and Williamson 1976, Means 1986). Egg masses have also been found at the entrances of and within crayfish burrows (Anderson and Williamson 1976). Embryos begin development immediately, but the egg must be inundated before it will hatch. Depending on when eggs are inundated, the larvae usually metamorphose (change into adult form) in March or April; the length of the larval period varies from 11 to 18 weeks (Palis 1995d).

The timing and frequency of rainfall are critical to the successful reproduction and recruitment of flatwoods salamanders. Fall rains are required to facilitate movements to the pond and winter rains are needed to ensure that ponds are filled sufficiently to allow hatching, development, and metamorphosis of larvae. In contrast, too much rainfall in the summer will keep pond levels from dropping below the grassy pond edge, as needed to provide dry substrate for egg deposition. This reliance on specific weather conditions results in unpredictable breeding events and reduces the likelihood that recruitment will occur every year.

Adult flatwoods salamanders leave the pond site after breeding. Studies have suggested a homing ability, based on data that salamanders exit the breeding pond near the point of their arrival (Palis 1997a). In a study by Ashton (1992), flatwoods salamanders were found greater than 1,700 m (1,859 yards (yd)) from their breeding pond. Thus, a flatwoods salamander population has been defined as those salamanders using breeding sites within 3.2 kilometers (km) (2 miles (mi)) of each other, barring an impassable barrier such as a perennial stream (Palis 1997b).

Flatwoods salamanders need to maintain moist skin for respiration and osmoregulation (to control the amounts of water and salts in their bodies) (Duellman and Trueb 1986). Since they may disperse long distances from their breeding ponds to upland sites where they live as adults, desiccation (drying out) can be a limiting factor in their movements. Thus, it is important that areas connecting their wetland and terrestrial habitats are protected in order to provide cover and appropriate moisture regimes during their migration. Using the available information on distances traveled by six species from their breeding sites to terrestrial habitats, Semlitsch (1998) determined the size area around a wetland needed to protect pond-breeding ambystomatid salamanders. The mean distance transversed by the six species was 164.3

m (534 ft). This value was used as a radius to generate a buffer zone surrounding a breeding site. Semlitsch estimated this area would encompass 95% of a population of any of the study species, but cautioned that this may be an underestimate of the habitat used by other species, including the flatwoods salamander. He further clarified that his definition of a buffer zone focused on the conservation of local populations and did not take into account habitat quality or the issues of metapopulation dynamics and landscape-level processes. A metapopulation is an interacting network of local subpopulations with varying frequencies of migration and gene flow among them. Local subpopulations may become extinct, but can be reestablished by individuals from other subpopulations.

High quality habitat for the flatwoods salamander includes a number of isolated wetland breeding sites within a landscape of longleaf pine/slash pine flatwoods having an abundant herbaceous ground cover (Sekerak 1994). Since temporary ponds are not likely permanent fixtures of the landscape due to succession, there will be inevitable extinctions of local populations (Semlitsch 1998). By maintaining a mosaic of ponds with varying hydrologies and by providing terrestrial habitats for use as colonization corridors, some protection against extinction can be achieved. A mosaic of ponds will ensure that appropriate breeding conditions will be achieved under different climatic regimes. Colonization corridors will allow movement of salamanders to new breeding sites or previously occupied ones (Semlitsch 1998).

The historical range of the flatwoods salamander included parts of the States of Alabama, Florida, Georgia, and South Carolina that are in the lower Coastal Plain of the southeastern United States. Knowledgeable researchers discounted a museum record from Mississippi that was previously thought to be a flatwoods salamander (Moler pers. comm. 1988). However, it is possible that flatwoods salamanders once occurred in extreme southeastern Mississippi due to similarities in habitat to historical sites in adjacent Alabama. Recent surveys (Kuss 1988, L. LaClaire pers. obs. 1995) have not documented the occurrence of flatwoods salamanders in Mississippi.

Historical records for the flatwoods salamander are limited. Longleaf pine/slash pine flatwoods historically occurred in a broad band across the lower southeastern Coastal Plain. The flatwoods salamander likely occurred in appropriate habitat throughout this area (Means pers. comm. 1995). The present distribution of the flatwoods salamander consists of isolated populations scattered across the remaining longleaf pine/slash pine flatwoods. We have compiled 110 historical records for the flatwoods salamander. Historical records are defined as those localities found before 1990. Localities consist of collections made either by sampling breeding sites or of individuals crossing highways on their way to or from breeding sites. During surveys of these localities over the last 8 years, 97 historical records were visited. Flatwoods salamanders were relocated at only 12 localities (12 percent). The exact site was located for 52 records (47 percent) and the general area (within several miles) was determined for 45 others (41 percent). Thirteen sites could not be located due to limited information in the record.

Range-wide surveys of available habitat in Alabama, Florida, Georgia, and South Carolina have been ongoing since 1990 in an effort to locate new populations. A total of at least 1,303 wetlands, which had a minimum of marginal suitability for the flatwoods salamander, were sampled, most of them multiple times. Of these, flatwoods salamanders were found at 110 sites (8 percent success rate). Most surveys were presence/absence searches for larvae in the grassy edges of ponds and we cannot infer an estimate of total population size or viability from these data.

Information on the current status of the flatwoods salamander by State follows:

In Alabama, there are five historical localities for the flatwoods salamander, all in the extreme southern portion of the State. Surveys conducted from 1992 to 1995 at the historical breeding ponds and from 1992 through 1998 at other potential breeding sites were unsuccessful at locating any flatwoods salamander populations (Godwin 1994, pers. comm.; Southeastern Amphibian Survey Cooperative 1998). The salamander was last observed in Alabama in 1981 (Jones *et al.* 1982).

Thirty-three historical records in 19 counties have been reported for Georgia (Goin 1950, Seyle 1994, Williamson and Moulis 1994); however, flatwoods salamanders have not been relocated at any of these sites in recent years. Surveys over the last 8 years of at least 478 wetlands with potential habitat for the flatwoods salamander have resulted in the location of 28 new breeding sites (6 percent success rate). These 28 breeding sites comprise 11 populations (sites within a 3.2 km (2 mi) radius of one another are considered the same population) (Seyle 1994; Jensen 1995; Moulis 1995a, 1995b; Jensen and Johnson 1998; K. Lutz, The Nature Conservancy of Georgia pers. comm. 1994; D. Stevenson, The Nature Conservancy of Georgia pers. comm. 1996; L. LaClaire pers. obs. 1995, 1997). Most of these breeding sites occur on Fort Stewart Military Installation.

In South Carolina, there are 29 historical records for the flatwoods salamander. Despite annual surveys since 1990, flatwoods salamanders have been relocated at only three of these sites (all sites represent a different population). One site is located on the Francis Marion National Forest and the other two are on private land. A new flatwoods salamander breeding site, representing a fourth population, was recently found on the Francis Marion National Forest (Moulis pers. comm. 1998) during state-wide surveys of approximately 118 wetlands considered to be potential habitat for this species.

In Florida, 39 of the 43 historical sites were relocated (or the general area thought to be the location). Nine (23 percent) contained flatwoods salamanders. Additional survey work over the past 8 years, in 23 counties and at least 530 wetlands with potential habitat, resulted in the location of 81 new breeding sites (15 percent of total sites surveyed). Fifty-six (69 percent) of these new breeding sites occur in Liberty and Okaloosa counties. These sites were found due to extensive surveys of the Apalachicola National Forest and Eglin Air Force Base, both of which contain some of the best remaining pine flatwoods habitat in the Southeast. The total number of extant flatwoods salamander populations known to occur in Florida is 36 with 15 (42 percent) occurring on the Apalachicola National Forest and Eglin Air Force Base (Palis 1993, 1994, 1995a, 1995b, 1995c; Printiss and Means 1996; Means 1998; Southeastern Amphibian Survey Cooperative 1998; H. Cooper, U.S. Fish and Wildlife Service pers. comm. 1998).

The combined State data from all survey work completed since 1990 indicate that 51 populations of flatwoods salamanders are known from across the historical range. Most of these occur in Florida (36 populations or 71 percent). Eleven populations have been found in Georgia, four in South Carolina, and none have been found in Alabama. Some of these populations are inferred from the capture of a single individual. Slightly more than half the known populations for the flatwoods salamander occur on public land (32 of 51, or 63 percent). Federal land holdings

that harbor flatwoods salamanders include the Apalachicola National Forest, Osceola National Forest, St. Marks National Wildlife Refuge, Eglin Air Force Base, Hurlburt Field, and Naval Air Station Whiting Field's Holley Out-lying Field in Florida; Fort Stewart Military Installation and Townsend Bombing Range in Georgia; and Francis Marion National Forest in South Carolina. State agencies manage three additional populations—in Florida, Pine Log State Forest and Pt. Washington State Forest harbor a single population each; and in Georgia, the Mayhaw Wildlife Management Area supports a recently discovered population. The remaining 19 populations are on private land.

Previous Federal Action

We identified the flatwoods salamander as a Category 2 candidate species in our notices of review for animals published in the **Federal Register** on December 30, 1982 (47 FR 58454), September 18, 1985 (50 FR 37958), January 6, 1989 (54 FR 554), November 21, 1991 (56 FR 58804), and November 15, 1994 (59 FR 58982). Before 1996, we defined a Category 2 candidate species as one that we were considering for possible addition to the Federal List of Endangered and Threatened Wildlife, but for which conclusive data on biological vulnerability and threat were not currently available to support a proposed rule. We discontinued designation of Category 2 species in the February 28, 1996, notice of review (61 FR 7956).

On May 18, 1992, we received a petition dated May 8, 1992, from the Biodiversity Legal Foundation, Boulder, Colorado, and Elizabeth Carlton, Gainesville, Florida, to list the flatwoods salamander as an endangered or threatened species throughout its historic range and to designate critical habitat. The petition stated that available evidence indicated that the flatwoods salamander had declined precipitously, that it was on the threshold of extirpation in many locations, and that it had been extirpated from a large portion of its historic range.

We announced a 90-day finding that the petition did not present substantial information that the requested action may be warranted in the **Federal Register** on May 12, 1993 (58 FR 27986). On August 23, 1993, attorneys representing the Biodiversity Legal Foundation, Jasper Carlton, the Director of the Biodiversity Legal Foundation, and Elizabeth Carlton notified us of their intent to sue the Service for violation of the Act. The petitioners felt that we had, in effect, already made a determination of ''may be warranted'' through the inclusion of the flatwoods salamander as a Category 2 species on the comprehensive notices of review for animals published before 1993. On April 25, 1994, the suit was filed. In response to an agreed upon settlement of this suit, and based upon our 1994 draft guidance relating to petitions for listing former Category 2 species, we rescinded the 90-day finding announced on May 12, 1993, and replaced it by a finding that the petitioned action may be warranted. We announced this finding in the **Federal Register** on September 21, 1994 (59 FR 48406), and included a request for comments and biological data on the status of the flatwoods salamander.

Section 4(b)(3)(B) of the Act and implementing regulations at 50 CFR 424.14, require the Secretary of the Interior, to the maximum extent practicable, within 12 months of receipt of a petition, to make a finding whether the action requested in the petition is (a) not warranted, (b) warranted, or (c) warranted but precluded. Because of budgetary constraints and the lasting effects of a congressionally imposed listing moratorium from April 1995 to April 1996, we processed petitions and other listing actions according to the listing priority guidance published in the **Federal Register** on December 5, 1996 (61 FR 64475). The guidance clarified the order in which we processed listing actions during fiscal year 1997. The guidance called for giving highest priority to handling emergency situations (Tier 1) and second highest priority (Tier 2) to resolving the status of outstanding proposed listings. We gave third priority (Tier 3) was given to resolving the conservation status of candidate species and processing administrative findings on petitions to add species to the lists or reclassify threatened species to endangered status. The processing of the petition and the proposed rule to list the flatwoods salamander fell under Tier 3. The proposal to list the flatwoods salamander as threatened was published in the **Federal Register** on December 16, 1997 (62 FR 65787).

On May 8, 1998, we published Listing Priority Guidance for fiscal years 1998 and 1999 (63 FR 25502). This guidance gives highest priority (Tier 1) to processing emergency rules to add species to the Lists of Endangered and Threatened Wildlife and Plants (Lists); second priority (Tier 2) to processing final determinations on proposals to add species to the Lists, processing new proposals to add species to the Lists, processing administrative findings on petitions (to add species to the Lists, delist species, or reclassify listed species), and processing a limited number of proposed or final rules to delist or reclassify species; and third priority (Tier 3) to processing proposed or final rules designating critical habitat. Processing of this final rule is a Tier 2 action.

Summary of Comments and Recommendations

In the December 16, 1997, proposed rule (62 FR 65787) and associated notifications, we requested all interested parties to submit factual reports or information that might contribute to the development of a final rule. We contacted appropriate Federal and State agencies, county governments, scientific organizations and other interested parties and requested their comments. Legal notices announcing the proposal and inviting public comment were published in newspapers across the range of the species. We published notices in *The Albany Herald* and *The Claxton Enterprise* on February 5, 1998; in *The Dothan Eagle* and the *Tallahassee Democrat* on February 6, 1998; in *The Florida Times-Union*, the *Mobile Press Register*, and the *Pensacola News Journal* on February 7, 1998; in the *Coastal Courier* and the *Savannah Morning News* on February 8, 1998; in *The Berkeley Independent* and the *Jasper County Sun* on February 11, 1998; and in *The Darien News* on February 12, 1998. The comment period for the proposal closed on February 17, 1998.

During the initial comment period, Rayonier (Southeast Forest Resources) and the Florida Forestry Association in Florida; Georgia-Pacific and Gilman Paper Company in Georgia; and the American Forest & Paper Association in Washington, D.C., submitted requests for a public hearing. As a result, on March 25, 1998, we published a notice in the **Federal Register** (63 FR 14414) announcing two public hearings and the reopening of the comment period until June 1, 1998. In addition, we announced the public hearings and invited public comment in *The Berkeley Independent* and the *Jasper County Sun* on April 8, 1998; in *The Claxton Enterprise* and *The Darien News* on April 9, 1998; in the *Coastal Courier*, the *Mobile Press Register*, and the *Savannah Morning News* on April 10, 1998; and in the *Tallahassee Democrat*, *The Florida Times-Union*, and the *Pensacola News Journal* on April 11, 1998. We conducted public hearings on April 14, 1998, at the Savannah Technical Institute in Savannah, Georgia, and on

April 15, 1998, at the Hermitage Centre in Tallahassee, Florida. Each hearing began with our opening comments followed by oral statements by the public. In Savannah, Georgia, 9 of the 44 people attending the hearing presented comments. In Tallahassee, Florida, 28 of the 110 people attending the hearing presented comments. At both hearings, the majority of comments concerned the effects listing the flatwoods salamander would have on private landowners.

We received 193 comments (letters and oral testimony) including 7 from State agencies and 186 from individuals, groups, and organizations. Of these, 136 opposed, 39 supported, and 18 were neutral on the proposed action. We received an additional 19 letters from a sixth grade class in Georgetown, South Carolina. The Georgia Department of Natural Resources and Alabama Department of Conservation and Natural Resources supported the listing action. The Florida Game and Fresh Water Fish Commission requested that we consider the development of a Candidate Conservation Agreement instead of listing. We received no comments from the South Carolina Department of Natural Resources. We have reviewed all written and oral comments received during the comment period and have incorporated comments updating the available data in the ''Background'' or ''Summary of Factors Affecting the Species'' sections of this rule. We have organized opposing comments and other substantive comments concerning the rule into specific issues, which may be paraphrased. We grouped comments of a similar nature together by issue and summarized as follows.

Issue 1: Status surveys for the flatwoods salamander were insufficient to make a listing determination. Commenters expressed concern over sampling methodologies (including lack of quantitative sampling), sites sampled, interpretation of historical data, and the difficulty in documenting the species' presence at sites. Commenters stated that surveys were not long-term or comprehensive enough to provide evidence for the decline of the species and that more surveys were needed during periods of optimum environmental conditions. Other commenters stated that more data are needed to determine if the remaining populations of the flatwoods salamander represent ''normal'' natural life cycles of a species without high population densities.

Response: Surveys were conducted during the breeding season using D-frame or flat-bottomed dip nets, a standardized field method for sampling larval amphibians (Shaffer *et al.* 1994). The Service, State wildlife agencies, and flatwoods salamander researchers recognize the difficulties associated with conducting flatwoods salamander surveys. For this reason, qualified surveyors repeatedly surveyed previously documented flatwoods salamander sites, that still bore evidence of potentially suitable habitat, before concluding that flatwoods salamanders were indeed extirpated from the site. In order to have the highest probability of finding flatwoods salamanders, most surveys for new populations targeted areas of remaining intact pine flatwoods habitat. We do not consider quantitative sampling essential to determine the status of rare species. Rare species, including the flatwoods salamander, are often distributed non-randomly. Random quantitative sampling is less efficient than choosing sites based on criteria such as available habitat.

Since 1990, numerous studies have addressed the status and distribution of the flatwoods salamander (see ''Background'' section). Weather conditions during these years have covered the range of extremes from drought to flooding. Scientists surveyed a total of at least 1,303 sites where flatwoods salamanders had not previously been documented to determine occupancy by the species, most multiple times. Only 8 percent of these sites were found to harbor the species. Limited access to private lands has hampered survey efforts at some locations; however, we believe that the information gathered during the field work is of sufficient extent and duration to document the rarity of the flatwoods salamander and a decline in its distribution due to habitat alteration or destruction.

Populations of most species are cyclic in nature, responding to such natural factors as weather events, disease, and predation. However, populations of the flatwoods salamander are small, fragmented, and isolated by various human-related factors including habitat conversion. Fifty-five percent of extant populations are widely separated from each other by unsuitable habitat. Only 18 percent of the original acreage of pine flatwoods habitat remains and much of it exists as isolated fragments imbedded in agricultural and urban-dominated landscapes (see ''Background'' section for more discussion). The isolated nature of flatwoods salamander populations makes them vulnerable to extirpation by random events. If their populations do cycle naturally at low densities, they will be less likely to rebound or become reestablished after a catastrophic event. Extinction becomes a possibility following a catastrophic event, if adjacent habitat is degraded or destroyed and no source populations to recolonize the area occur within dispersal distance.

Information, studies, field data, and site analyses provided by biologists and others familiar with the flatwoods salamander and its habitat provided adequate information on the distribution, habitat requirements, and threats to the species to warrant the present action. The listing process includes an opportunity for the public to comment and provide information that we evaluate and consider before making a final decision. The additional data provided by respondents during the comment period, and other appropriate information available to us, support our determination that listing is warranted.

Issue 2: More research on the flatwoods salamander's life history and habitat needs is necessary before a listing determination can be made.

Response: We agree that there is limited information on the flatwoods salamander's life history and specific environmental requirements. However, the information standard in section 4(b)(1)(A) of the Act—''A determination to list a species shall be based on the best available scientific and commercial information on the species' status'' does not require us to possess detailed or extensive information about the general biology of the species or to make an actual determination of the causes for the species' status to make a listing determination. The Act's information standard requires only that the best available information must support a conclusion that the species meets the Act's definition for threatened or endangered after consideration of the five factors defined in section 4(a) of the Act (see discussion in the ''Summary of Factors Affecting the Species'' section). The most compelling threat to the flatwoods salamander is the severe reduction of available habitat and its continued loss from conversion, fragmentation, and degradation. Additional information on flatwoods salamander life history and habitat needs is not necessary to support a listing determination. However, this information will be important in the development of a recovery plan and management guidelines for the flatwoods salamander.

Issue 3: Timber harvesting and pine plantation management are not well documented as threats to the flatwoods salamander. The location of existing flatwoods salamander breeding sites adjacent to intensively managed forests indicates the species has some level of

compatibility with pine plantation management. Commenters felt that silvicultural activities considered by the Service to be detrimental or degrading to flatwoods salamander habitat are based on anecdotal or circumstantial evidence rather than data from controlled experiments. Other commenters recommended that the Service more completely describe silvicultural activities, especially those related to continued or future management of pine plantations, that would be likely or unlikely to result in section 9 violations on private lands.

Response: Land uses that have a dramatic adverse impact on flatwoods salamander habitat can present significant threats to the existence of the species. The relationships between timber management and flatwoods salamander populations are undoubtedly complex and need further study. The manner, timing, and extent of silvicultural activities all dictate what effects they may have on the flatwoods salamander and its habitat. We are aware of flatwoods salamander localities adjacent to pine plantations. However, the viability of these populations is unknown. The best available information on the effects of timber management on the flatwoods salamander, cited in the ''Background'' and ''Summary of Factors Affecting the Species'' sections, indicates that habitat alteration, including destruction of ground cover vegetation and alteration of hydrology at occupied sites, has been a causative factor in the decline of flatwoods salamander populations. We believe, however, that silvicultural activities that avoid adverse effects to important habitat characteristics (i.e., ground cover, hydrology) are compatible with maintenance of flatwoods salamander populations.

We have relied on the best available scientific and commercial data in making this listing determination. Silvicultural activities are included as just one of the threats identified in our analysis of the status of the species under the ''Summary of Factors Affecting the Species'' section of this rule. Using the best available information, we have developed guidelines for silvicultural practices that would not be likely to result in a violation of section 9 of the Act (see the ''Available Conservation Measures'' section). We look forward to working cooperatively with the timber industry, researchers, and others to refine these guidelines and determine what levels of timber extraction, site preparation, and other management activities are most beneficial to the recovery of the flatwoods salamander.

Issue 4: Documentation of historical flatwoods salamander occurrences is limited. In addition, there are no data showing a correlation between pine flatwoods conversion and loss of suitable flatwoods salamander habitat nor data indicating flatwoods salamanders were evenly distributed throughout historic pine flatwoods areas. As a result, commenters felt that the listing proposal was based on habitat trends without supporting data on declining population trends. In fact, new flatwoods salamander populations have been discovered in recent surveys. Therefore, even with the loss of historical sites, the number of known sites is stable or increasing.

Response: In assessing the status of the flatwoods salamander, we reviewed the best available information regarding past and present distribution of the species. In the past, this reclusive species was not frequently studied or collected. However, lack of historical data is not a consideration in determining whether a species is endangered or threatened. It has been well documented that the distribution of pine flatwoods has declined precipitously throughout the Southeast. Therefore, it is logical to assume that populations of animals associated with this habitat, including those of the flatwoods salamander, have also declined. Surveys of the known historical localities, conducted over the past 8 years, have resulted in the relocation of a limited number of populations (12 percent success rate). We believe that newly discovered localities, in counties where the species was not previously recorded, do not represent newly colonized sites but rather extant sites in areas not previously surveyed by field biologists. These newly discovered isolated populations, within the described range of the species, provide evidence of a broad historical distribution of the species across pine flatwoods habitat in the Southeast.

Issue 5: There is no range-wide estimate for the total number of flatwoods salamanders.

Response: We agree that an estimate of the total population is lacking for the flatwoods salamander. However, we considered several additional factors that also are important in developing a biologically accurate species status assessment. The biological security of many declining species is more a function of the number of healthy local populations than the total number of individuals in the wild. Besides considering the number of sites and distribution of subpopulations across the species' range, we also considered the historical and current rates of decline, distribution and proximity of subpopulations, quantity and quality of available habitat, and imminent and potential threats to the species and its habitat. Therefore, although quantitative sampling has not been completed for the species, pertinent and significant information regarding the other aspects of the species' status is available. The decreasing quality and quantity of flatwoods salamander sites throughout the species' historical and current range are a more accurate reflection of the salamander's status than is a rough estimate of total population.

Issue 6: The flatwoods salamander has always been a rare species and this rarity does not justify listing it as a threatened species.

Response: Historical rarity of the flatwoods salamander has not been quantitatively documented. It is true that historical collections of the species are limited; however, most amphibians have not been extensively surveyed, even species that are considered common. Surveys have confirmed the current rarity of the flatwoods salamander and also the decline in quantity and quality of the pine flatwoods habitat needed for its survival. This decline in habitat was a significant factor in determining that the flatwoods salamander warranted listing.

Issue 7: There is a need to research the impacts of predatory species, such as armadillos and coyotes, on the flatwoods salamander. The imported red fire ant may also be a potential threat to the species.

Response: While the flatwoods salamander has coexisted with a community of predators over time, little is known regarding the effect of predators on the species. Human development, for example, may increase the numbers of armadillos, coyotes, and fire ants that inhabit flatwoods salamander localities. However, there are no data to indicate predators are a significant threat to the flatwoods salamander.

Issue 8: Much of the data used in support of the proposed rule was not peer reviewed. The Service also relied on personal observations that were not part of any report for such subjects as optimum habitat, movements, and activity ranges.

Response: We consider all available information in making a listing determination. This includes reliable unpublished reports, non-literature documentation, and personal communications with experts. The public reviewed the proposed rule, which also was peer reviewed according

to our policy (see ''Peer Review'' section).

Issue 9: A buffer area defined by a 1.6-km (1-mi) radius around a known flatwoods salamander breeding site is not supported by the scientific literature. Placing a protective area around a breeding site should be on a site-specific basis.

Response: We have received new data (Semlitsch 1998) on protective buffer areas needed around salamander breeding ponds (see discussion in ''Background'' section). In addition, we have received information gathered from a meeting of herpetologists, State agency biologists, and other experts that was held to review management issues relative to the flatwoods salamander, including the applicability of Semlitsch's paper to the species (Jensen *in litt.* 1998). Of the six species reviewed by Semlitsch, the marbled salamander (*A. opacum*) was judged to be the most similar in habitat needs to the flatwoods salamander. The maximum recorded distance moved by the marbled salamander was 450 m (1,476 ft) (see Semlitsch 1998). Therefore, in order to estimate the dimensions of a buffer that would protect the majority of a flatwoods salamander population, a radius of 450 m (1,476 ft) out from the wetland edge was suggested. Forest management recommendations within the buffer included harvesting only in dry periods, clear-cutting if no more than 25 percent of the buffer is cut at each harvest, restricting the use of mechanical site preparation techniques or other actions that would disturb the upper soil layers, and restricting herbicides to use for control of woody shrub encroachment only when fire could not be employed. An inner zone within the buffer with a radius of 164 m (538 ft) out from the wetland edge, the area needed to protect 95 percent of an ambystomatid population as estimated by Semlitsch, was considered to be important. Within this inner zone, it was recommended that clear-cutting be excluded.

Based on this new information, we have revised the dimensions of the buffer area and associated management scenario that would *not* be considered ''take'' (see discussion of violations of section 9 under ''Available Conservation Measures'' section). Whether or not ''take'' is a consideration, we will work with any interested landowner to determine the specific set of conditions appropriate for protection of a known flatwoods salamander site on his or her property. Depending on the needs of the landowner, a protective area might be developed in conjunction with the issuance of an incidental take permit through the habitat conservation planning process.

Issue 10: The social and economic impacts of listing the flatwoods salamander were not considered. Timber harvest will be restricted in the Southeast and the timber industry will be negatively impacted. Listing will negatively affect the ability of non-industrial private landowners to make a profit from their lands and they should be compensated for any financial loss resulting from the listing of the flatwoods salamander. Without financial compensation, there is no incentive for landowners to keep land in timber, and habitat available for the flatwoods salamander will be lost through conversion to agriculture and urban development.

Response: Under section 4(b)(1)(A) of the Act, we must base a listing determination solely on the best scientific and commercial data available. The legislative history of this provision clearly states the intent of Congress to ''ensure'' that listing decision are ''. . . based solely on biological criteria and to prevent nonbiological criteria from affecting such decisions . . .'' H.R. Rep. No. 97–835, 97th Cong., 2d Sess. 19 (1982). As further stated in the legislative history, ''. . . economic considerations have no relevance to determinations regarding the status of species . . .'' *Id.* at 20. Because we are specifically precluded from considering economic impacts, either positive or negative, in a final decision on a proposed listing, we did not consider the economic impacts of listing the flatwoods salamander.

Issue 11: As an alternative to listing, populations of flatwoods salamanders should be established on Federal and State lands by using animals removed from private lands or bred through captive propagation.

Response: The purpose of the Act is to provide a means whereby the natural ecosystems upon which endangered and threatened species depend may be conserved. Loss of suitable habitat is the primary threat to the flatwoods salamander. Therefore, continued loss of habitat by removing the salamander from occupied sites would be counter to protection for the species and would accelerate its decline. We are working with the Department of Defense, the U.S. Forest Service, and States within the range of the salamander to ensure that conservation of the flatwoods salamander is carried out on all public lands where it currently exists. While several Federal land holdings support apparently stable populations of flatwoods salamanders, they represent widely separated sites that compose a small fraction of the total range of the species. We believe protection of these sites alone would not alleviate the need to list the flatwoods salamander.

Issue 12: The Florida Game and Fresh Water Fish Commission (Commission) proposed that the concept of a Candidate Conservation Agreement (CCA) be explored as an alternative to listing. The Commission stated that a CCA, involving voluntary cooperation by private landowners, would provide a greater benefit to the species than listing. The additional benefit of a CCA would result because more landowners would be willing to participate in the recovery of the flatwoods salamander if Federal intervention and regulation was minimized. Another governmental agency, the Florida Division of Forestry, expressed support for this concept. Many other commenters supported some type of voluntary public/private sector cooperation instead of listing.

Response: CCAs are formal agreements between the Service and one or more parties (e.g., landowners, land managers, or State fish and wildlife agencies) to address the conservation needs of proposed or candidate species. The participants take on the responsibility of developing the CCA, and voluntarily commit to implementing specific actions that will remove or reduce the threats to the subject species, thereby contributing to stabilizing or restoring the species. The ultimate goal of any CCA is to adequately remove threats to the species, so that the need for listing under the Act can be eliminated.

To preclude the need to list the flatwoods salamander, a sufficient number of CCAs on both public and private lands would have to be developed and implemented to adequately remove threats, so that we could conclude that protection under the Act was no longer be needed. Although the Commission suggested the development of such an agreement, they did not provide a specific plan. Also, the Commission would not have control over implementation of such a plan since they own or manage land containing only two of the approximately 50 known flatwoods salamander populations.

We fully realize that recovery of the flatwoods salamander will partially depend upon voluntary cooperation of private landowners, and welcome them as partners in the recovery effort. We will work to provide technical assistance to those property owners and land managers who wish to implement conservation measures for this species.

Although we cannot delay the listing process while an agreement or plan is

being developed, we still encourage their development subsequent to a final listing decision. Such plans may serve as a foundation for a recovery plan and could lead to earlier recovery and delisting.

Issue 13: The Commission requested that a listing decision be postponed for 12 months to allow development of a CCA in Florida. The Florida Division of Forestry also requested that a listing decision be postponed for 1 year.

Response: The Act requires that we use the best scientific and commercial information available to make a final determination on a proposed listing within 1 year of the date a species is proposed. The flatwoods salamander was proposed in December 16, 1997. The Act stipulates that this 1-year deadline may be extended for up to 6 months to solicit additional data only if there is substantial scientific disagreement among the scientists knowledgeable about the species regarding the sufficiency or accuracy of the data used in the proposed determination. We find no substantial disagreement among scientists knowledgeable about the flatwoods salamander that would serve as a basis for extension of the 1-year deadline.

Issue 14: Use of herbicides and fertilizers has not been proven to be detrimental to flatwoods salamanders. In fact, given the proper selection and use of herbicide, rate, method, and timing, herbicides may be useful in maintaining or enhancing habitat conditions for the flatwoods salamander.

Response: Management of flatwoods salamander habitat is best accomplished through a regime of growing season burns. In some cases though, burning may not be a viable option, due to smoke liability or other concerns, and herbicides may be needed to control woody vegetation. Amphibians have shown a vulnerability to herbicides and other chemicals in their environment (see factor E under ''Summary of Factors Affecting the Species''). However, we agree there is likely a role for herbicides in the management of flatwoods salamander habitat if Best Management Practices (BMPs) are used and herbicides are carefully selected to target hardwood encroachment.

Issue 15: All private landowners who would be affected by a potential listing of the flatwoods salamander were not contacted. They should have a say in the listing decision.

Response: We published legal notices in 12 local newspapers. In addition, we contacted appropriate Federal and State agencies, county governments, scientific organizations, forestry associations, and other interested parties. The public had the opportunity to comment on the proposed rule for over 4 months. The Act requires listing be based solely on the five criteria in section 4(a).

Issue 16: If the flatwoods salamander is listed, Alabama should be omitted from the listed range. The Service can then concentrate recovery efforts in States where the species still occurs.

Response: We will concentrate recovery efforts in States where the species still occurs. It is possible, however, that isolated populations of the flatwoods salamander may still be extant in Alabama. Nevertheless, species may be listed in the States where they have been documented to occur historically, regardless of the current distribution of the species.

Issue 17: State BMPs designed to control water quality problems with chemical applications are already in place that would protect flatwoods salamander breeding ponds.

Response: Landowners who use State BMPs around existing flatwoods salamander breeding ponds will be benefitting the salamander. These BMPs do not protect against the conversion of upland sites, however. Thus, the use of BMPs does not completely alleviate the threat of habitat destruction to the flatwoods salamander.

Issue 18: The 3.2 km (2 mi) distance used as a basis for identifying separate populations of the flatwoods salamander is not justified based on the movement data from other ambystomatids. As a result, the actual number of populations may be higher than that reported by Service.

Response: The only movement data available for the flatwoods salamander indicate the species is capable of moving distances greater than 1,700 m (1,859 yd). Historically, the species was most likely distributed as metapopulations dispersed throughout available pine flatwoods habitat. We believe, based on the best available data on the flatwoods salamander, that the use of a 3.2 km (2 mi) distance as a basis for identifying separate populations is justified.

Issue 19: Listing the flatwoods salamander will halt timber sales on public lands.

Response: Section 7(a) of the Act states that Federal agencies have a responsibility to conserve endangered and threatened species and use their authorities to further the purposes of the Act. On Federal lands containing populations of flatwoods salamanders, modifications of some timber practices may be needed in the vicinity of known breeding sites to further the recovery of the species. However, we consider appropriate timber management to be the land use activity most compatible with the continued existence of the flatwoods salamander (see discussion of section 9 in ''Available Conservation Measures'' section).

Issue 20: The conversion of pine flatwoods habitats to pine plantations has been reduced and does not represent a threat to the flatwoods salamander. Since future conversion to plantations will be minimal, more flatwoods salamander sites will be threatened by urbanization and agricultural development.

Response: Most of the remaining pine flatwoods habitat is in private ownership. Many consulting foresters recommend that private landowners convert existing pine flatwoods sites to short rotation timber management with high stocking rates to maximize short-term financial gain. Data compiled through State forest inventories between 1989 and 1995 indicate that the loss of pine flatwoods through land use conversion is still occurring (see discussion in factor A of ''Summary of Factors Affecting the Species''). Therefore, we consider conversion of existing flatwoods sites to pine plantations to be a continuing threat, along with conversion of habitat through urban and agricultural development.

Issue 21: The proposed rule did not provide compelling reasons for not designating critical habitat.

Response: We have determined that designation of critical habitat will not provide additional benefit beyond that achieved by the listing of the flatwoods salamander (see the ''Critical Habitat'' section). We may reevaluate designation of critical habitat at some future time if new information becomes available or circumstances change.

Peer Review

In conformance with our policy on information standards, published on July 1, 1994 (59 FR 34270), we solicited the expert opinions of independent specialists regarding pertinent scientific or commercial data and assumptions relating to the supportive biological and ecological information for the flatwoods salamander. The purpose of such review is to ensure that the listing decision is based on scientifically sound data, assumptions, and analyses, including input of appropriate experts and specialists.

Three peer reviewers commented upon the accuracy of the information presented within the proposed rule. We asked them to provide any relevant scientific data relating to taxonomy, distribution, or to the supporting

biological and ecological data used in the analysis of the factors for listing. All reviewers expressed their support for Federal listing of the flatwoods salamander. We have incorporated their comments into the final rule, as appropriate, and summarized their observations below.

All three reviewers discussed threats to the flatwoods salamander. Threats identified included loss of forested pine flatwoods habitat, alteration of hydrology of existing pine flatwoods sites, soil disturbance, fire suppression, and changes in ground cover that resulted in a sparse herbaceous component and a dense weedy shrub layer. Based on their field experience with the species, all three reviewers expressed the view that the decline of the flatwoods salamander was a result of loss of both wetland and forested habitat. One reviewer stated that Federal listing of the species was important, because at present there is no protection against the loss of the flatwoods salamander's habitat.

One reviewer stated that due to the cyclic nature of breeding in many amphibians, caution should be used in interpreting the absence of flatwoods salamanders at previously occupied sites. The reviewer felt that the status of amphibians, including the flatwoods salamander, should be evaluated based on the disappearance of known habitats (see discussion of habitat loss under factor A in ''Summary of Factors Affecting the Species'' section).

The reviewers discussed specific impacts to the flatwoods salamander. One reviewer, experienced with the species and its habitat in several States, described quality sites as fire-maintained, open, mature longleaf pine woodland with a well developed and diverse herbaceous ground cover. When these conditions were found, flatwoods salamanders could be abundant. On the other hand, when flatwoods sites were ditched and/or drained and converted to even-aged slash pine plantations with a sparse herbaceous component, flatwoods salamanders were rarely found. Another of the reviewers also agreed that hydrologic changes and heavy soil disturbance were a problem for the species. This reviewer pointed to drainage of habitat types as a threat to the species that probably reduces overall activities including feeding. He also stated that direct mechanical impact to upper soil layers likely destroys the burrow complexes required by this fossorial species.

Summary of Factors Affecting the Species

After a thorough review and consideration of all information available, we determine that the flatwoods salamander should be classified as a threatened species. We followed procedures found at section 4(a)(1) of the Act and regulations (50 CFR part 424) implementing the listing provisions of the Act. A species may be determined to be an endangered or threatened species due to one or more of the five factors described in section 4(a)(1). These factors and their application to the flatwoods salamander (Ambystoma cingulatum *Cope*) are as follows:

A. The Present or Threatened Destruction, Modification, or Curtailment of Its Habitat or Range

The major threat to the flatwoods salamander is loss of both its longleaf pine/slash pine flatwoods terrestrial habitat and its isolated, seasonally ponded breeding habitat. The combined pine flatwoods (longleaf pine-wiregrass flatwoods and slash pine flatwoods) historical acreage was approximately 12.8 million ha (32 million ac) (Wolfe *et al.* 1988, Outcalt 1997). Today, the combined flatwoods acreage has been reduced to 2.3 million ha (5.6 million ac) or approximately 18 percent of its original extent. These remaining pine flatwoods (non-plantation forests) are typically fragmented, degraded, second-growth forests.

Land use conversions, primarily urban development and conversion to agriculture and pine plantations, eliminated large acreages of pine flatwoods (Schultz 1983, Stout and Marion 1993, Outcalt and Sheffield 1996, Outcalt 1997). Surveys of historical flatwoods salamander localities documented the destruction of nine sites from urban development or agriculture and loss of three additional sites due to their conversion to pine plantations. State forest inventories completed between 1989 and 1995 indicate that flatwoods losses through land use conversion are still occurring (Outcalt 1997). In Florida and Georgia, the States where flatwoods habitat is concentrated and where most flatwoods salamander populations occur, 52,600 ha (130,000 ac) were lost to urban and agricultural use during the survey cycle of 8 years (Outcalt 1997). Conversion of existing pine flatwoods second-growth forests to managed plantations is also continuing. In Georgia and Florida, there was a yearly loss of this habitat to pine plantations of nearly 20,200 ha (50,000 ac) in each State with a loss of 24 percent and 20 percent, respectively, during the 8-year survey interval (Outcalt 1997). Most of the remaining second-growth pine flatwoods (56 percent) occur on private non-industrial lands (Outcalt 1997). Many of these sites are converted after harvest to intensive management regimes (i.e., heavy mechanical site preparation, high stocking rates) similar to pine plantations. Urban development is expanding into forested areas, especially in rapidly developing areas of Florida and Georgia. If present rates of loss continue, in 25 years nearly all natural pine flatwoods stands could be destroyed in these two States (Outcalt 1997).

Flatwoods salamander wetland breeding sites have also been degraded and destroyed. Alterations in hydrology, agricultural and urban development, silvicultural practices (described in more detail below), dumping in or filling of ponds, conversion of wetlands to fish ponds, domestic animal grazing, and soil disturbance reduced the number and diversity of these small wetlands (Vickers *et al.* 1985, Ashton 1992). Hydrological alterations represent the primary threat to flatwoods salamander breeding sites. Size and suitability of wetlands as breeding sites depend on subsoil moisture, the permeability of the hardpan, the pond's drainage area, and other factors. Alterations to any of these factors can affect the pond's ability to hold water and function as a breeding site.

Forest management strategies commonly used on pine plantations contribute to degradation of flatwoods salamander forested and wetland habitat. These include soil-disturbing site preparation techniques, lowered fire frequencies and reductions in average area burned per fire event (see factor E), high seedling stocking rates, and herbicide use, which may reduce plant diversity in the understory. The result of these strategies is a forest that approaches even-age structure, has a dense understory, and low herbaceous cover. Forestry practices that directly affect wetland breeding sites include ditching ponds or low areas to drain water from a site, converting second-growth pine forests to bedded pine plantations, harvesting cypress from the ponds, disposing of slash in wetlands during timber operations, using ponds as part of ditched fire breaks, using fertilizers near wetlands which can result in eutrophication (water enriched in nutrients), and disturbing the soil at a wetland (Vickers *et al.* 1985; Ashton 1992; Means *et al.* 1996; Palis, 1997b).

Clear-cut harvesting of forested sites appears to be an additional threat. Studies have demonstrated negative short-term impacts on the density of local amphibian populations as a result of clear-cuts (deMaynadier and Hunter 1995), although amphibian species composition and richness may be unchanged (Enge and Marion 1986, Dominigue-O'Neill 1995). The decrease in density of some species of amphibians may be the result of alterations in hydroperiods, decreased relative humidity, and disturbance of plant litter, stumps, and fallen logs used as refugia (Enge and Marion 1986). Amphibians, especially salamanders, are vulnerable to habitat drying and reduction of refugia because their moist permeable skin acts as a respiratory organ and must remain moist to function properly (Duellman and Trueb 1986). Raymond and Hardy (1991) monitored the mole salamander (*A. talpodieum*) at a breeding site adjacent to a recent clear-cut. They found that salamanders were displaced from the cut side of the pond and that there was lowered survivorship in individuals of the breeding population that immigrated to the breeding pond from the clear-cut.

Means *et al.* 1996, implicated silvicultural practices affecting both upland and breeding habitats in the decline of a flatwoods salamander population monitored for over 20 years in the panhandle of western Florida. They attributed the decline at this site to habitat modifications resulting from clear-cutting, conversion of the site to a pine plantation, and fire suppression. Habitat modifications included soil disturbance, hydrologic changes, canopy closure, and loss of herbaceous ground cover.

Due to the cyclic nature of breeding in many amphibians, an analysis of habitat quality is important in providing information to be used in interpreting absence of a species from a site. LaClaire (1997) collected data on habitat quality from recent surveys of historical sites where flatwoods salamanders were not relocated (85 of 97, or 88 percent). Data combined aspects of both wetland and upland habitat attributes at each site. Habitat quality was characterized as none (site destroyed), low (flatwoods salamanders unlikely), moderate (salamanders possible but habitat degraded), or high (habitat appears suitable for flatwoods salamanders). Fifty-three of the unoccupied historical sites (53 of 85, or 62 percent) had been destroyed or were of low or moderate habitat quality. Contributing factors in the loss of habitat suitability included conversion of sites to agriculture, home sites, pastures, and highways. Conversion of sites to slash pine plantations was also an important factor in the loss of habitat suitability (L. LaClaire pers. obs. 1997).

In Florida, Palis (1997b) characterized habitat quality surrounding historical flatwoods salamander breeding ponds, where the species has been found in recent surveys. Each site was assigned a score based on pine species dominance and disturbance (second-growth flatwoods versus plantation sites) and the relative abundance of wiregrass (*Aristida* sp.) ground cover. Wiregrass was chosen as a factor of habitat quality because its loss has been used as an indicator of site degradation from fire suppression and/or soil disturbance (Clewell 1989). In Palis' study, approximately 70 percent of the active breeding sites were surrounded by second-growth longleaf or slash pine flatwoods with nearly undisturbed wiregrass ground cover. In general, Palis found that the extant populations of the flatwoods salamander principally occurred on forest lands managed for long rotation, saw-timber production, rather than on short rotation pine plantations managed for pulp production.

Road construction plays a part in habitat degradation and destruction. At least one historical flatwoods breeding site has been filled in association with the construction of a road (Palis 1993). Roads increase the accessibility of breeding ponds to off-road vehicle enthusiasts that use pond basins for ''mud bogging,'' which disturbs the soil and vegetation and degrades the quality of a site for flatwoods salamander breeding. Roads may also alter the quality of isolated wetlands by draining, damming, or redirecting the water in a basin and contributing hydrocarbons and other chemical pollutants via runoff and sedimentation.

A number of habitat degradation factors are implicated in the decline of one South Carolina flatwoods salamander population monitored for over 20 years (Moulis 1987, Bennett pers. comm. 1997). The site is bisected by a road that flatwoods salamanders have to cross to reach their breeding site. Much of the upland area, in which the salamanders dwell as adults, has undergone urban development (Bennett pers. comm. 1997). In addition, fire suppression has resulted in the loss of the open, grassy pond edge associated with quality breeding sites. Habitat quality at this site has degraded to the point where successful reproduction and recruitment are infrequent and the population is at risk (LaClaire pers. obs. 1995).

Extensive surveys have been conducted over the past 8 years in Alabama, Georgia, Florida, South Carolina, and Mississippi to search for flatwoods salamanders at historical localities and at other potential sites. The low level of success of these surveys is believed to be a reflection of both the loss of upland and isolated wetland breeding habitat and the reduction in the quality of the remaining habitats.

B. Overutilization for Commercial, Recreational, Scientific, or Educational Purposes

Overcollecting for scientific purposes may have contributed to the decline of a South Carolina population, which was impacted also by habitat degradation. Between 1970 and 1976, a minimum of 84 adults and 870 larvae were collected in this area (Savannah Science Museum collection records). Only two flatwoods salamanders have been captured at this locality since 1990, in spite of annual monitoring.

Overcollecting does not presently appear to be a significant threat to the species; however, it may become a problem if the specific breeding locations become available to the general public. The rarity, uniqueness, and attractiveness of the species make the flatwoods salamander a candidate for the pet trade, should it become easy to obtain.

At some sites, Palis (1996) found that the harvest of crayfish for bait was associated with the killing of larval flatwoods salamanders. However, while this practice has caused the loss of some individuals, it is not currently thought to be a significant threat to the species as a whole.

C. Disease or Predation

Disease is currently unknown in the flatwoods salamander.

Exposure to increased predation from fish is a potential threat to the flatwoods salamander when isolated, seasonally ponded breeding sites are converted to more permanent wetlands inhabited by fish. Ponds may be modified specifically to serve as fish ponds or sites may be altered due to the construction of drainage ditches or firebreaks, which provide avenues for fish to enter the wetlands. Studies of other ambystomatid species have demonstrated a decline in larval survival in the presence of predatory fish (Semlitsch 1987, 1988). Ashton (*in litt.* 1998) witnessed predation on ornate chorus frogs (*Pseudacris ornata*) by fire ants and stated that fire ants may pose a threat to the flatwoods salamander.

D. The Inadequacy of Existing Regulatory Mechanisms

Regulatory mechanisms currently in effect do not provide adequate protection for the flatwoods salamander and its habitat. There are no existing regulatory mechanisms for the protection of the upland habitats where flatwoods salamanders spend most of their lives. Section 404 of the Clean Water Act is the primary Federal law that has the potential to provide some protection for the wetland breeding sites of the flatwoods salamander. Under section 404, nationwide permit 26 allows these wetlands to be filled with no review process if wetlands are less than 0.13 ha (1/3 ac), and with only minimal review if they are between 0.13 ha and 1.2 ha (3 ac) in size.

Some populations on Federal lands have benefitted where prescribed burning has been used as a regular management tool. However, multiple use priorities on public lands, such as timber production, and military and recreational use, make protection of the flatwoods salamander secondary. The National Environmental Policy Act requires an intensive environmental review of projects that may adversely affect a federally listed species, but project proponents are not required to avoid impacts to non-listed species.

At the State and local levels, regulatory mechanisms are also limited. The flatwoods salamander is listed as a rare protected species in the State of Georgia (Seyle 1994). This designation protects the species by prohibiting actions that cause direct mortality or the destruction of its habitat on lands owned by the State of Georgia and by preventing its sale, purchase, or possession (Jensen pers. comm. 1997). At present, there is only one known flatwoods salamander population on lands owned by the State of Georgia. In South Carolina, the flatwoods salamander is listed as endangered (Bennett 1995). Prohibitions extend only to the direct take of the flatwoods salamander (Bennett pers. comm. 1997). These regulations offer no protection against the most significant threat to the flatwoods salamander, which is loss of its habitat. The flatwoods salamander is considered rare in Florida by the Florida Committee on Rare and Endangered Plants and Animals (Ashton 1992); however, there are no protective regulations for this species or its habitat in the State (Moler 1990).

E. Other Natural or Manmade Factors Affecting Its Continued Existence

Fire is needed to maintain the natural pine flatwoods community. Ecologists consider fire suppression the primary reason for the degradation of remaining longleaf pine forest acreage. Wolfe *et al.* (1988) reported that pine flatwoods naturally burn every 3 to 4 years, probably most commonly in the summer months. Sampling of longleaf pine flatwoods sites in Florida indicated that less than 30 percent of sites on private lands received prescribed burning to mimic the effects of natural fire (Outcalt 1997). The disruption of the natural fire cycle has resulted in an increase in slash pine on sites formerly dominated by longleaf pine, an increase in hardwood understory, and a decrease in herbaceous ground cover (Wolfe *et al.* 1988; Means pers. comm. 1995). Ponds surrounded by pine plantations and protected from the natural fire regime become unsuitable flatwoods salamander breeding sites, due to canopy closure and the resultant reduction in emergent herbaceous vegetation needed for egg deposition and larval development sites (Palis 1993). Of the 13 historical flatwoods salamander localities altered to the point where the habitat was no longer suitable, fire suppression was a contributing factor in at least 5 (38 percent). Current forest management is moving away from burning as a management tool due to liability considerations and concerns that fire will damage the quality of the timber.

Habitat fragmentation of the longleaf pine ecosystem, resulting from habitat conversion, threatens the survival of the remaining flatwoods salamander populations. Fifty-one populations occur across four States. Fifty-five percent (28 of 51) of these populations are widely separated from each other by unsuitable habitat. Research conducted in Florida documented that 25 percent of remaining longleaf pine flatwoods sites were isolated fragments imbedded in agricultural and urban-dominated landscapes (Outcalt 1997). Studies have shown that the loss of small fragmented populations is common, and recolonization is critical for their regional survival (Fahrig and Merriam 1994, Burkey 1995). As patches of available habitat become separated beyond the dispersal range of a species, populations are more sensitive to genetic, demographic, and environmental variability and may be unable to recover (Gilpin 1987, Sjogren 1991). Amphibian populations may be unable to recolonize areas after local extinctions due to their physiological constraints, relatively low mobility, and site fidelity (Blaustein *et al.* 1994).

Roads contribute to habitat fragmentation by isolating blocks of remaining contiguous habitat. They may disrupt migration routes and dispersal of individuals to and from breeding sites. In addition, vehicles may also kill flatwoods salamanders when they are attempting to cross roads (Means 1996a).

Pesticides and herbicides may pose a threat to amphibians such as the flatwoods salamander, because their permeable eggs and skin readily absorb substances from the surrounding aquatic or terrestrial environment (Duellman and Trueb 1986). In frogs, use of agricultural pesticides has resulted in lower survival rates, deformities, and lethal effects on tadpoles (Sanders 1970, FROGLOG 1993). Other negative effects of commonly used pesticides and herbicides on amphibians include delayed metamorphosis, paralysis, reduced growth rates, and mortality (Bishop 1992). Herbicides may also alter the density and species composition of vegetation surrounding a breeding site and reduce the number of potential sites for egg deposition, larval development, or shelter for migrating salamanders.

Long-lasting droughts or frequent floods may affect local flatwoods salamander populations. Although these are natural processes, other threats, such as habitat fragmentation and habitat degradation, may stress a population to the point that it cannot recover or recolonize other sites.

We have carefully assessed the best scientific and commercial information available regarding the past, present, and future threats faced by this species in determining to make this rule final. Based on this evaluation, the preferred action is to list the flatwoods salamander as threatened. Activities associated with conversion of forests to agriculture and urban development, silvicultural practices, and the disruption of natural fire cycles have contributed to significantly reducing the range and habitat of this species. Remaining populations are vulnerable as suitable habitat continues to be lost or degraded by these activities. While not in immediate danger of extinction, the flatwoods salamander is likely to become an endangered species in the foreseeable future if the present trend continues.

Critical Habitat

Critical habitat is defined in section 3 of the Act as: (i) The specific areas within the geographical area occupied by a species, at the time it is listed in accordance with the Act, on which are found those physical or biological features (I) essential to the conservation of the species and (II) that may require special management consideration or protection; and (ii) specific areas

outside the geographical area occupied by a species at the time it is listed, upon a determination that such areas are essential for the conservation of the species. ''Conservation'' means the use of all methods and procedures needed to bring the species to the point at which listing under the Act is no longer necessary.

Section 4(a)(3) of the Act, as amended, and implementing regulations (50 CFR 424.12) require that, to the maximum extent prudent and determinable, the Secretary designate critical habitat at the time the species is determined to be endangered or threatened. Our regulations (50 CFR 424.12(a)(1)) state that designation of critical habitat is not prudent when one or both of the following situations exist: (i) The species is threatened by taking or other activity and the identification of critical habitat can be expected to increase the degree of threat to the species or (ii) Such designation of critical habitat would not be beneficial to the species. We find that designation of critical habitat is not prudent for the flatwoods salamander.

Critical habitat designation, by definition, directly affects only Federal agency actions. Activities that might affect the flatwoods salamander on Federal lands include forestry management, military activities, and Federal actions that would impact the hydrology of the wetlands used by the flatwoods salamander for reproduction. Such activities would be subject to review under section 7(a)(2) of the Act, whether or not critical habitat was designated.

Section 7(a)(2) requires Federal agencies to ensure that activities they authorize, fund, or carry out are not likely to jeopardize the continued existence of a listed species or to destroy or adversely modify its critical habitat. Common to definitions of the ''jeopardy'' and ''adverse modification'' standards is an appreciable detrimental effect on both survival and recovery of the species. We believe that any significant adverse modification or destruction of flatwoods salamander habitat, to the extent that survival and recovery are appreciably diminished, would likely jeopardize this species' continued existence. Therefore, habitat protection from Federal actions can be accomplished for the flatwoods salamander through application of the section 7 jeopardy standard. We are currently working with the appropriate Federal land managing agencies to identify, protect, and manage flatwoods salamander habitat.

Federal permit issuance on private lands would also be subject to review; however, the primary activities affecting habitat for the flatwoods salamander on private lands are silvicultural, and are not subject to the Federal review process under section 7. However, activities that may result in a taking of the flatwoods salamander that are not already authorized by a Federal agency under section 7, do require authorization under section 10 of the Act. Section 10(a)(1)(B) authorizes us to issue permits for take of listed species incidental to otherwise lawful activities such as agriculture, foresty, and urban development. A habitat conservation plan that is submitted by the applicant as part of the permit application would identify measures to be taken to conserve the species. We must also ensure, under section 7 of the Act, that the issuance of an incidental permit will not jeopardize the continued existence of the listed species. Thus, habitat protection on private lands may be accomplished through section 10 of the Act.

On private lands, industrial timber landowners are cooperating with us to conduct surveys for the flatwoods salamander and to develop management strategies to protect its habitat. We will continue to coordinate with State and Federal agencies, as well as private property owners and other affected parties through the recovery process to manage habitat for the flatwoods salamander.

We believe that any potential benefits to critical habitat designation are outweighed by additional threats to the species that would result from such designation. Collecting for scientific and recreational purposes is a potential threat to the survival of the flatwoods salamander (see factor B in the ''Summary of Factors Affecting the Species'' section). Flatwoods salamanders are a rare and attractive species, and these characteristics make them potentially valuable in the pet trade. The collection of amphibians and reptiles for the pet trade has increased in recent years. For example, all box turtles have been placed on Appendix II of the Convention on International Trade in Endangered Species of Wild Fauna and Flora due to the increased commercialization of these species. Collection of amphibians and reptiles for personal use and the pet trade is common in the vicinity of the most viable flatwoods salamander populations (K. Enge, Florida Game and Fresh Water Fish Commission, pers. comm. 1997). Permits are required for commercial collecting; however, collection regulations are difficult to monitor and enforce. Flatwoods salamanders concentrate for breeding and reproduction around breeding ponds, where they are most vulnerable to collecting. Publication of specific localities of breeding ponds would be required in the critical habitat designation process in order to obtain the notification benefit provided by such designation. The publication of breeding pond sites would increase the flatwoods salamander's level of vulnerability to illegal collecting.

Based on the above analysis, we conclude that critical habitat designation would provide little additional benefit for the flatwoods salamander, beyond that which would result from listing under the Act. We also conclude that an increased level of vulnerability to collecting would offset any potential benefit from such a designation.

Available Conservation Measures

Conservation measures provided to species listed as endangered or threatened under the Act include recognition, recovery actions, requirements for Federal protection, and prohibitions against certain activities. Recognition through listing results in public awareness and conservation actions by Federal, State, and local agencies, private organizations, and individuals. The Act provides for possible land acquisition and cooperation with the States and requires that recovery actions be carried out for all listed species. The protection required of Federal agencies and the prohibitions against taking and harm are discussed, in part, below.

Section 7(a) of the Act, as amended, requires Federal agencies to evaluate their actions with respect to any species that is listed as endangered or threatened and with respect to its critical habitat, if any is designated. Regulations implementing this interagency cooperation provision of the Act are codified at 50 CFR part 402. Section 7(a)(4) requires Federal agencies to confer informally with us on any action that is likely to jeopardize the continued existence of a proposed species or result in destruction or adverse modification of proposed critical habitat. If a species is subsequently listed, section 7(a)(2) requires Federal agencies to ensure that activities they authorize, fund, or carry out are not likely to jeopardize the continued existence of the species or destroy or adversely modify its critical habitat. If a Federal action may affect a listed species or its critical habitat, the responsible Federal agency must enter into formal consultation with us.

The flatwoods salamander occurs on Federal lands administered by the

Department of Defense, Fish and Wildlife Service, and U.S. Forest Service. These land management agencies would be required to evaluate the potential adverse impacts to the flatwoods salamander from their activities. Federal activities that could affect the flatwoods salamander through destruction or modification of suitable habitat include, but are not limited to, forest management, military operations, and road construction. Other Federal agencies that may be involved in authorizing, funding, or permitting activities that may affect the flatwoods salamander include the Army Corps of Engineers, due to their review of dredge and fill of isolated wetlands under section 404 of the Clean Water Act, nationwide permit 26; the Federal Energy Regulatory Commission, due to their oversight of gas pipeline and power line rights-of-way; and the Federal Highway Administration, when Federal funds are involved in road construction. We have resolved nearly all section 7 consultations to protect the species and meet the project objectives.

The Act and its implementing regulations set forth a series of general prohibitions and exceptions that apply to all threatened wildlife. The prohibitions, codified at 50 CFR 17.31 for threatened wildlife, in part, make it illegal for any person subject to the jurisdiction of the United States to take (includes harass, harm, pursue, hunt, shoot, wound, kill, trap, capture, or collect; or to attempt any of these), import, export, ship in interstate commerce in the course of commercial activity, or sell or offer for sale in interstate or foreign commerce any listed species. It is also illegal to possess, sell, deliver, carry, transport, or ship any such wildlife that has been taken illegally. Certain exceptions apply to agents of the Service and State conservation agencies.

We may issue permits to carry out otherwise prohibited activities involving threatened wildlife species under certain circumstances. Regulations governing permits are codified at 50 CFR 17.32 for threatened species. You may obtain permits for scientific purposes, to enhance the propagation or survival of the species, and/or for incidental take in connection with otherwise lawful activities. For threatened species, you may also obtain permits for zoological exhibition, educational purposes, or special purposes consistent with the purposes of the Act.

It is our policy, published in the **Federal Register** on July 1, 1994 (59 FR 34272), to identify, to the maximum extent practicable at the time a species is listed, those activities that are or are not likely to constitute a violation of section 9 of the Act. The intent of this policy is to increase public awareness of the effects of the listing on proposed and ongoing activities within a species' range. We believe that, based upon the best available information, the following actions are not likely to result in a violation of section 9, provided these activities are carried out in accordance with existing regulations and permit requirements:

(1) Possession of legally acquired flatwoods salamanders;

(2) Lawful hunting activities;

(3) Lawful burning of habitat where the flatwoods salamander is known to occur, including winter burning;

(4) Federally approved projects that involve activities such as discharge of fill material, draining, ditching, tiling, bedding, diversion or alteration of surface or ground water flow into or out of a wetland (i.e., due to roads, impoundments, discharge pipes, etc.), when you conduct the activity in accordance with any reasonable and prudent measures given by the Service in accordance with section 7 of the Act;

(5) Conversion of pine flatwoods habitat where the flatwoods salamander does not occur;

(6) Timber harvesting in pine flatwoods habitat within a 450–m (1,476–ft) radius buffer zone surrounding a known flatwoods salamander breeding pond, in accordance with the following guidelines:

(a) Use selective harvest, only during dry periods and at a minimum of 10-year intervals, within an inner primary zone extending 164 m (538 ft) out from the edge of the breeding pond. Maintain a basal area of 4.2 to 4.7 square meters (sq m) per ha (45 to 50 square feet (sq ft) per ac) in the primary zone.

(b) Use a mix of clear-cutting and selective harvest, only during dry periods and at a minimum of 10-year intervals, in an outer secondary zone extending from 164 m (538 ft) to 450 m (1,476 ft) out from the edge of the breeding pond. Clear-cut up to 25 percent of this secondary zone at any given time, as long as you maintain 75 percent of the secondary zone in pine flatwoods habitat at a basal area of 4.2 to 4.7 sq m per ha (45 to 50 sq ft per ac). Do not separate the primary and secondary zone from each other by cleared or inappropriate habitat (e.g., non-pine flatwoods habitat such as agriculture, urban development or other forest types).

(c) Minimize skid trails and their effects through the use of prescription planning and techniques such as pallets and bridges. Locate skid trails parallel to, rather than perpendicular to, the wetland edge to reduce alterations in wetland hydrology. Locate all log landings outside the primary and secondary zones.

(d) Keep soil disturbance to a minimum. Do not conduct intensive mechanical site preparation (i.e., root-raking, discing, stumping, bedding) or any other actions that cause significant soil disturbance.

(e) Prescribed fire should be the preferred method for site preparation and control of woody vegetation. Limit herbicide use to manual application, following BMPs, when fire cannot be employed.

(7) Timber harvesting (including clear-cutting) in pine flatwoods habitat where the flatwoods salamander does not occur or outside the 450–m (1,476–ft) buffer zone described above; and

(8) Bait harvesting for crayfish in ephemeral ponds.

We believe the following activities would be likely to result in a violation of section 9; however, possible violations are not limited to these actions alone:

(1) Unauthorized collecting, handling, or harassing of individual flatwoods salamanders;

(2) Possessing, selling, transporting, or shipping illegally taken flatwoods salamanders;

(3) Unauthorized destruction or alteration of wetlands used as breeding sites by flatwoods salamanders. These actions would include discharge of fill material, draining, ditching, tiling, bedding, clear-cutting within the wetland, diversion or alteration of surface or ground water flow into or out of a wetland (i.e., due to roads, impoundments, discharge pipes, etc.), and operation of any vehicles within the wetland;

(4) Discharge or dumping of toxic chemicals, silt, or other pollutants (i.e., sewage, oil, and gasoline) into isolated wetlands or upland habitats supporting the species; and

(5) Unlawful destruction or alteration of suitable pine flatwoods habitat within a 450-m (1,476-ft) radius surrounding a known flatwoods salamander breeding pond. These actions would include, but are not limited to, conversion of habitat to agricultural or urban use, or ditching and draining a site.

(6) Use of pesticides or herbicides in violation of label restrictions.

We will review other activities not identified above on a case-by-case basis to determine whether they may be likely to result in a violation of section 9 of the Act. We do not consider these lists to be

exhaustive and provide them as information to the public.

You should direct questions regarding whether specific activities may constitute a future violation of section 9 to the Field Supervisor of the Service's Jackson Field Office (see **ADDRESSES** section). You may request copies of the regulations regarding listed wildlife from and address questions about prohibitions and permits to the U.S. Fish and Wildlife Service, 1875 Century Blvd., Suite 200, Atlanta, Georgia 30345, or telephone 404/679–7313; facsimile 404/679–7081.

Section 10(a)(1)(B) authorizes us to issue permits for the taking of listed species incidental to otherwise lawful activities such as agriculture, forestry, and urban development. A habitat conservation plan (HCP) identifying conservation measures that the permittee agrees to implement to conserve the species, is a requirement to obtaining this permit. A key element of our review of a HCP is a determination of the plan's effect upon the long-term conservation of the species. We would approve a HCP and issue a section 10(a)(1)(B) permit if the plan provides for minimization and mitigation of the impacts of the taking and for not appreciably reducing the likelihood of the survival and recovery of that species in the wild.

National Environmental Policy Act

We have determined that we do not need to prepare an Environmental Assessment, as defined under the authority of the National Environmental Policy Act of 1969, in connection with regulations adopted pursuant to section 4(a) of the Act. A notice outlining our reasons for this determination was published in the **Federal Register** on October 25, 1983 (48 FR 49244).

Paperwork Reduction Act

This rule does not contain any new collections of information other than those already approved under the Paperwork Reduction Act, 44 U.S.C. 3501 *et seq.*, and assigned Office of Management and Budget clearance number 1018–0094. An agency may not conduct or sponsor, and a person is not required to respond to a collection of information, unless it displays a currently valid control number. For additional information concerning permit and associated requirements for threatened species, see 50 CFR 17.32.

References Cited

You may request a complete list of all references cited herein, as well as others, from the Jackson Field Office (see **ADDRESSES** section).

Author

The primary author of this final rule is Linda V. LaClaire, Jackson Field Office (see **ADDRESSES** section) (601/965–4900, ext. 26).

List of Subjects in 50 CFR Part 17

Endangered and threatened species, Exports, Imports, Reporting and recordkeeping requirements, Transportation.

Regulation Promulgation

Accordingly, we amend part 17, subchapter B of chapter I, title 50 of the Code of Federal Regulations, as follows:

PART 17—[AMENDED]

1. The authority citation for part 17 continues to read as follows:

Authority: 16 U.S.C. 1361–1407; 16 U.S.C. 1531–1544; 16 U.S.C. 4201–4245; Pub. L. 99–625, 100 Stat. 3500, unless otherwise noted.

2. Amend section 17.11(h) by adding the following, in alphabetical order under AMPHIBIANS, to the List of Endangered and Threatened Wildlife:

§ 17.11 Endangered and threatened wildlife.

* * * * *

(h) * * *

Species		Historic range	Vertebrate population where endangered or threatened	Status	When listed	Critical habitat	Special rules
Common name	Scientific name						
*	*	*	*	*	*		*
AMPHIBIANS							
*	*	*	*	*	*		*
Salamander, flatwoods.	*Ambystoma cingulatum.*	U.S.A. (AL, FL,GA,SC).	Entire	T	658	NA	NA
*	*	*	*	*	*		*

Dated: March 18, 1999.

Jamie Rappaport Clark,

Director, Fish and Wildlife Service.

[FR Doc. 99–7942 Filed 3–31–99; 8:45 am]

BILLING CODE 4310–55–P

DEPARTMENT OF COMMERCE

National Oceanic and Atmospheric Administration

50 CFR Part 648

[Docket No. 990324080–9080–01; I.D. 031599D]

RIN 0648–AM10

Fisheries of the Northeastern United States; Northeast Multispecies Fishery; Framework Adjustment 28

AGENCY: National Marine Fisheries Service (NMFS), National Oceanic and Atmospheric Administration (NOAA), Commerce.

ACTION: Final rule.

SUMMARY: NMFS issues this final rule to implement measures contained in Framework 28 of the Northeast Multispecies Fishery Management Plan (FMP). This final rule allows the use, at specified times, of gillnets in areas otherwise closed to gillnet gear, provided they are equipped with pingers; removes the pinger specifications currently contained in the regulations and references the pinger specifications found in the Harbor Porpoise Take Reduction Plan (HPTRP); extends the Cape Cod South and Massachusetts Bay Closure Areas (March 1–March 30) to December 1–May 31; modifies the Mid-Coast Closure

Area coordinates in the regulations to comport with those specified in the HPTRP; and replaces the framework adjustment procedure requiring the New England Fishery Management Council's (Council's) Harbor Porpoise Review Team to annually review harbor porpoise mortality goals with a procedure using the information and recommendations provided by the HPTRP's Harbor Porpoise Take Reduction Team. The intent of this action is to make the regulations to protect harbor porpoise in the Northeast multispecies fishery, issued under the authority of the Magnuson-Stevens Fishery Conservation and Management Act (Magnuson-Stevens Act) consistent, to the extent allowed by the Magnuson-Stevens Act, with the HPTRP and the regulations issued under the authority of the Marine Mammal Protection Act (MMPA) to implement the HPTRP.

DATES: Effective March 29, 1999.

ADDRESSES: Copies of Amendment 7 to the FMP, its regulatory impact review (RIR), and the final regulatory flexibility analysis contained within the RIR, its final supplemental environmental impact statement, and Framework Adjustment 28 documents are available on request from Paul J. Howard, Executive Director, New England Fishery Management Council, 5 Broadway, Saugus, MA 01906–1097.

FOR FURTHER INFORMATION CONTACT: David M. Gouveia, Fishery Management Specialist, 978–281–9280.

SUPPLEMENTARY INFORMATION: Framework Adjustment 28 was developed by the Council to make the regulations to protect harbor porpoise in the Northeast multispecies fishery, issued under the authority of the Magnuson-Stevens Act, consistent, to the extent allowed by the Magnuson-Stevens Act, with the HPTRP and the regulations issued under the authority of the MMPA to implement the HPTRP.

The 1994 amendments to the MMPA require the preparation and implementation of take reduction plans for strategic marine mammal stocks that interact with Category I or II fisheries. A fishery is designated by NMFS as a Category I fishery if it has frequent incidental mortality and serious injury of marine mammals while a fishery is designated by NMFS as a Category II fishery if it has occasional serious injuries and mortalities of marine mammals. Based on harbor porpoise bycatch information contained in the marine mammal stock assessment reports, the Northeast multispecies sink gillnet fishery was classified as a Category I fishery and the Mid-Atlantic coastal gillnet fishery was classified as a Category II fishery.

In response to MMPA mandates, on December 2, 1998 (63 FR 66464), NMFS issued regulations implementing the HPTRP. The HPTRP contains measures to reduce harbor porpoise takes in the Gulf of Maine Northeast multispecies gillnet fishery and the Mid-Atlantic coastal gillnet fishery. Regulations issued under the authority of the Magnuson-Stevens Act to implement the FMP also contain measures to achieve harbor porpoise mortality reduction goals. However, some of the FMP implementing regulations are inconsistent with the HPTRP and the regulations issued to implement the HPTRP. This action would eliminate the inconsistencies in the Magnuson-Stevens Act FMP implementing regulations, to the extent allowed by the Magnuson-Stevens Act, by allowing the use, at specified times, of gillnets in areas currently closed to gillnet gear, provided they are equipped with pingers; removing the pinger specifications currently contained in the regulations and referencing the pinger specifications found in the HPTRP; extending the Cape Cod South and Massachusetts Bay Closure Areas (March 1–March 30) to December 1–May 31; modifying the Mid-Coast Closure Area coordinates in the regulations to comport with those specified in the HPTRP; and replacing the framework adjustment procedure requiring the Council's Harbor Porpoise Review Team to annually review harbor porpoise mortality goals with a procedure using the information and recommendations provided by the HPTRP's Harbor Porpoise Take Review Team. Because of the limitations of NMFS authority in regulating fishing vessels without Federal permits that fish exclusively in state waters, the multispecies regulations cannot mirror state regulations on fishing activity as specified in the HPTRP and HPTRP implementing regulations.

Abbreviated Rulemaking

NMFS is making these revisions to the regulations under the framework abbreviated rulemaking procedure codified at 50 CFR part 648, subpart F. This procedure requires the Council, when making specifically allowed adjustments to the regulations, to develop and analyze the actions over the span of at least two Council meetings. The Council must provide the public with advance notice of both the proposals and the analysis, and with an opportunity to comment on them prior to and at a second Council meeting. Upon review of the analysis and public comment, the Council may recommend to the Administrator, Northeast Region, NMFS, that the measures be published as a final rule if certain conditions are met. NMFS may publish the measures as a final rule, or as a proposed rule if additional public comment is necessary.

The public was provided the opportunity to comment on the management measures contained in Framework 28 at the Council's January 28, 1999, and February 24, 1999, meetings. Documents summarizing the Council's proposed action and the analysis of biological and economic impacts of this and alternative actions were available for public review one week prior to the final February 24, 1999, meeting, as is required under the framework adjustment procedures. Written comments could be submitted up to and during that meeting. No comments were received.

Classification

This rule makes the regulations protecting harbor porpoise in the Northeast multispecies fishery in the FMP implementing regulations consistent, to the extent allowed by the Magnuson-Stevens Act, with the HPTRP and the regulations implementing the HPTRP. Notice and opportunity for public comment were provided to discuss the management measures implemented by this final rule. In addition, this framework needs to be filed with the Office of the Federal Register as soon as possible in order to allow gillnet vessels to fish in the Mid-Coast Closure Area, as allowed under the HPTRP. Therefore, the Assistant Administrator for Fisheries, NOAA (AA), finds for good cause, under 5 U.S.C. 553(b)(B), that additional prior notice and additional opportunity for public comment are unnecessary and contrary to the public interest.

Because Framework Adjustment 28 relieves more stringent measures by providing industry the opportunity to fish with gillnet gear equipped with pingers in areas currently closed to gillnet gear, under 5 U.S.C. 553(d)(1), it is not subject to a 30-day delay in effectiveness.

Because prior notice and an opportunity for public comment are not required to be provided for this rule by 5 U.S.C. 553, or by any other law, the analytical requirements of the Regulatory Flexibility Act, 5 U.S.C. 601 *et seq.*, are inapplicable. A Final Regulatory Flexibility Analysis (FRFA) was prepared as part of the referenced Environmental Assessment for the HPTRP. Although the FRFA indicates that the HPTRP is significant because of the increased operating costs caused by

the HPTRP, this analysis is not applicable to this framework action. This action merely results in eliminating a more stringent measure in order to achieve consistency with the HPTRP.

This final rule has been determined to be not significant for the purposes of E.O. 12866.

List of Subjects in 50 CFR Part 648

Fisheries, Fishing, Reporting and recordkeeping requirements.

Dated: March 29, 1999.

Andrew A. Rosenberg,

Deputy Assistant Administrator for Fisheries, National Marine Fisheries Service.

For the reasons set out in the preamble, 50 CFR part 648 is amended as follows:

PART 648—FISHERIES OF THE NORTHEASTERN UNITED STATES

1. The authority citation for part 648 continues to read as follows:

Authority: 16 U.S.C. 1801 *et seq.*

2. In § 648.14, paragraphs (a)(90) and (c)(10) are revised to read as follows:

§ 648.14 Prohibitions.

(a) * * *

(90) Use, set, haul back, fish with, fail to remove, or possess on board a vessel, unless stowed in accordance with § 648.81(e)(4), sink gillnets and other gillnet gear capable of catching multispecies, with the exception of pelagic gillnets (conforming to all requirements for the use of such gillnets in § 648.81(f)(2)(ii)) or gillnet gear equipped with pingers (as described in § 229.33(b) of this title), in the areas and for the times specified in § 648.87 (a) and (b), except as provided in § 648.81(f)(2)(ii) and § 648.87 (a) and (b), or unless otherwise authorized in writing by the Regional Administrator.

* * * * *

(c) * * *

(10) Enter, fail to remove sink gillnets and other gillnet gear capable of catching multispecies from, or be in the areas, and for the times, described in § 648.87 (a) and (b), except as provided in § 648.81(d), and (f)(2), and in § 648.87(a)(1)(ii), (a)(2)(ii), and (a)(3)(ii).

* * * * *

3. In § 648.87, paragraphs (a) and (c) are revised to read as follows:

§ 648.87 Gillnet requirements to reduce or prevent marine mammal takes.

(a) Areas closed to gillnet gear capable of catching multispecies to reduce harbor porpoise takes. Section 648.81(f) sets forth a closed area restriction to reduce the take of harbor porpoise consistent with the harbor porpoise mortality reduction goals. Further, all persons owning or operating vessels in the EEZ portion of the areas and times specified in paragraphs (a)(1), (a)(2), and (a)(3) of this section must remove all of their sink gillnets and other gillnet gear capable of catching multispecies, with the exception of pelagic gillnets (conforming to all requirements for the use of such gillnets in § 648.81(f)(2)(ii)) or gillnet gear equipped with pingers (as described in § 229.33(b) of this title), and may not use, set, haul back, fish with, or possess on board, unless stowed in accordance with the requirements of § 648.81(e)(4), sink gillnets and other gillnet gear capable of catching multispecies, with the exception of pelagic gillnets (conforming to all requirements for the use of such gillnets in § 648.81(f)(2)(ii)) or gillnet gear equipped with pingers (as described in § 229.33(b) of this title) in the EEZ portion of the areas and for the times specified in paragraphs (a)(1), (a)(2), and (a)(3) of this section. Also, all persons owning or operating vessels issued a limited access multispecies permit must remove all of their sink gillnets and other gillnet gear capable of catching multispecies, with the exception of pelagic gillnets (conforming to all requirements for the use of such gillnets in § 648.81(f)(2)(ii)) or gillnet gear equipped with pingers (as described in § 229.33(b) of this title), from the areas and for the times specified in paragraphs (a)(1), (a)(2), and (a)(3) of this section, and, may not use, set, haul back, fish with, or possess on board, unless stowed in accordance with the requirements of § 648.81(e)(4), sink gillnets and other gillnet gear capable of catching multispecies, with the exception of pelagic gillnets (conforming to all requirements for the use of such gillnets in § 648.81(f)(2)(ii)) or gillnet gear equipped with pingers (as described in § 229.33(b) of this title) in the areas and for the times specified in paragraphs (a)(1), (a)(2), and (a)(3) of this section.

(1) *Mid-coast Closure Area.* (i) From September 15 through May 31 of each fishing year, the restrictions and requirements specified in paragraph (a) of this section apply to the Mid-coast Closure Area (copies of a chart depicting this area are available from the Regional Administrator upon request), except as provided in paragraph (a)(1)(ii) of this section, which is the area bounded by straight lines connecting the following points in the order stated.

MID-COAST CLOSURE AREA

Point	N. latitude	W. longitude
MC1	42°30′	(1)
MC2	42°30′	70°15′
MC3	42°40′	70°15′
MC4	42°40′	70°00′
MC5	43°00′	70°00′
MC6	43°00′	69°30′
MC7	43°30′	69°30′
MC8	43°30′	69°00′
MC9	(2)	69°00′

1 Massachusetts shoreline.
2 Maine shoreline.

(ii) Vessels subject to the restrictions and regulations specified in paragraph (a) of this section may fish in the Mid-coast Closure Area, as defined under paragraph (a)(1)(i) of this section, from September 15 through May 31 of each fishing year, provided that pingers are used in accordance with the requirements found at § 229.33(b) of this title.

(2) *Cape Cod South Closure Area.* (i) From December 1 through May 31 of each fishing year, the restrictions and requirements specified in paragraph (a) of this section apply to the Cape Cod South Closure Area (copies of a chart depicting this area are available from the Regional Administrator upon request), except as provided in paragraph (a)(2)(ii) of this section, which is the area bounded by straight lines connecting the following points in the order stated.

CAPE COD SOUTH CLOSURE AREA

Point	N. latitude	W. longitude
CCS1	(1)	71°45′
CCS2	40°40′	71°45′
CCS3	40°40′	70°30′
CCS4	(2)	70°30′

1 RI Shoreline.
2 MA Shoreline.

(ii) Vessels subject to the restrictions and regulations specified in paragraph (a) of this section may fish in the Cape Cod South Closure Area, as defined under paragraph (a)(2)(i) of this section, from December 1 through the last day of February and April 1 through May 31 of each fishing year, provided that pingers are used in accordance with the requirements found at § 229.33(b) of this title.

(3) *Massachusetts Bay Closure Area.* (i) From December 1 through May 31 of each fishing year, the restrictions and requirements specified in paragraph (a) of this section apply to the Massachusetts Bay Closure Area (copies of a chart depicting this area are available from the Regional Administrator upon request), except as

provided in paragraph (a)(3)(ii) of this section, which is the area bounded by straight lines connecting the following points in the order stated.

MASSACHUSETTS BAY CLOSURE AREA

Point	N. latitude	W. longitude
MB1	42°30′	(1)
MB2	42°30′	70°30′
MB3	42°12′	70°30′
MB4	42°12′	70°00′
MB5	(2)	70°00′
MB6	42°00′	(2)
MB7	42°00′	(1)

[1] Massachusetts shoreline.
[2] Cape Cod shoreline.

(ii) Vessels subject to the restrictions and regulations specified in paragraph (a) of this section may fish in the Massachusetts Bay Closure Area, as defined under paragraph (a)(3)(i) of this section, from December 1 through the last day of February and April 1 through May 31 of each fishing year, provided that pingers are used in accordance with the requirements found at § 229.33(b) of this title.

* * * * *

(c) *Framework adjustment.* (1) The Harbor Porpoise Take Reduction Team will provide the NEFMC with the best available information on the status of Gulf of Maine harbor porpoise, including estimates of abundance and estimates of bycatch in the sink gillnet fishery.

(2) After receiving and reviewing the Harbor Porpoise Take Review Team's findings and recommendations, the NEFMC shall determine whether adjustments or additional management measures are necessary to avoid inconsistencies with the Harbor Porpoise Take Reduction Plan. If the NEFMC determines that adjustments or additional management measures are necessary, it shall develop and analyze appropriate management actions over the span of at least two NEFMC meetings.

(3) The NEFMC shall provide the public with advance notice of the availability of the proposals, appropriate rationale, economic and biological analyses, and opportunity to comment on them prior to and at the second NEFMC meeting. The NEFMC's recommendation on adjustments or additions to management measures must come from one or more of the categories specified under § 648.90(b)(1).

(4) If the NEFMC recommends that the management measures should be issued as a final rule, the NEFMC must consider at least the factors specified in § 648.90(b)(2).

(5) The Regional Administrator may accept, reject, or with NEFMC approval, modify the NEFMC's recommendation, including the NEFMC's recommendation to issue a final rule, as specified under § 648.90(b)(3).

[FR Doc. 99–8049 Filed 3–29–99; 3:08 pm]
BILLING CODE 3510–22–P

Proposed Rules

Federal Register
Vol. 64, No. 62
Thursday, April 1, 1999

This section of the FEDERAL REGISTER contains notices to the public of the proposed issuance of rules and regulations. The purpose of these notices is to give interested persons an opportunity to participate in the rule making prior to the adoption of the final rules.

SMALL BUSINESS ADMINISTRATION

13 CFR Part 121

Small Business Size Standards; Request for Comments

AGENCY: Small Business Administration.

ACTION: Request for comments.

SUMMARY: The Small Business Administration (SBA) is requesting public comment on the definition ''Manufacturer,'' which appears in SBA's regulations on small business size standards, as it applies to the computer industry. Because some in the computer industry have interpreted this definition too broadly, SBA's Nonmanufacturer Rule may have been applied inappropriately. The Nonmanufacturer Rule is intended to provide assurance that agency contract awards are directed solely for the purpose of assisting and developing small business manufacturers. In order to provide more precise guidance on the application of the Nonmanufacturer Rule, SBA, in conjunction with public input, wants to develop a modern definition of the term ''Manufacturer'' and to establish a new definition for the term ''Remanufacturer.''

DATES: Submit comments on or before June 1, 1999.

ADDRESSES: Submit comments to David Wm. Loines, Procurement Analyst, U.S. Small Business Administration, 409 3rd Street, SW., Washington, DC 20416.

FOR FURTHER INFORMATION CONTACT: David Wm. Loines, Procurement Analyst, (202) 205–6475, FAX (202) 205–7324.

SUPPLEMENTARY INFORMATION: The Small Business Administration (SBA) is requesting public comment on the definition ''Manufacturer,'' which appears in SBA's regulations on small business size standards, as it applies to the computer industry. In 13 CFR 121.406(b)(2), SBA currently defines Manufacturer as ''the concern which, with its own facilities, performs the primary activities in transforming inorganic or organic substances, including the assembly of parts and components, into the end item being acquired.'' Some computer industry businesses believe that SBA's definition of Manufacturer is too broad, and allows a firm that has made only minor modifications to a finished product (manufactured by another company) to be classified as a Manufacturer. This loose interpretation of the definition may have caused the inappropriate application of SBA's Nonmanufacturer Rule (13 CFR 121.406 (b)). The Nonmanufacturer Rule is intended to provide assurance that agency contract awards are directed solely for the purpose of assisting and developing small business manufacturers.

In order to provide more precise guidance on the application of the Nonmanufacturer Rule, SBA, in conjunction with public input, wants to develop a current definition of the term ''Manufacturer,'' and a new definition for the term ''Remanufacturer.'' SBA has developed the following description for Remanufacturer: ''any person that processes, conditions, renovates, repackages, restores, or does any other act to a finished product that significantly changes the finished products performance or specification, or intended use.'' SBA would appreciate comments from the public.

The SBA also seeks public comment and industry-based data on the specific questions listed below. Commenters are not limited to, nor obligated to address, every question. In providing comments, please key your response to the number of the applicable question (e.g., ''Response to question 1.''). Please be industry specific. Comments should be as precise as possible. The use of examples is encouraged.

Comments are requested on the following issues:

1. Should small business concerns that make minor modifications to finished products be classified as manufacturers?
2. What is manufacturer in the computer industry (hardware, Value-added changes, Software)?
3. What classifies as minor modifications?
4. Should Value-Added Resellers (VARs) be considered manufacturers?
5. Should the definition for Remanufacturer be used to describe these small businesses?
6. Your recommendation(s) for classifying these types of small businesses as manufacturers.
7. The impact that a reclassification of these small businesses would have on the small business community.

Dated: March 5, 1999.

Richard L. Hayes,

Associate Deputy Administrator for Government Contracting and Minority Enterprise Development.

[FR Doc. 99–7740 Filed 3–31–99; 8:45 am]

BILLING CODE 8025–01–P

DEPARTMENT OF TRANSPORTATION

Federal Aviation Administration

14 CFR Part 71

[Airspace Docket No. 99–AWS–08]

Proposed Revocation of Class D Airspace; Dallas NAS, Dallas, TX

AGENCY: Federal Aviation Administration (FAA), DOT.

ACTION: Notice of proposed rulemaking.

SUMMARY: This notice proposes to revoke the Class D airspace area at Dallas Naval Air Station (NAS), Dallas, TX. The FAA is taking this action due to the closure of Dallas NAS. The United States Navy no longer requires use of the airspace. The intended effect of this proposal is to revoke the Class D airspace at Dallas NAS since it is no longer needed.

DATES: Comments must be received on or before June 1, 1999.

ADDRESSES: Send comments on the proposal in triplicate to Manager, Airspace Branch, Air Traffic Division, Federal Aviation Administration, Southwest Region, Docket No. 99–ASW–08, Fort Worth, TX 76193–0520. The official docket may be examined in the Office of the Regional Counsel, Southwest Region, Federal Aviation Administration, 2601 Meacham Boulevard, Fort Worth, TX, between 9:00 a.m. and 3:00 p.m., Monday through Friday, except Federal holidays. As informal docket may also be examined during normal business hours at the Airspace Branch, Air Traffic Division, Federal Aviation Administration, southwest Region, 2601 Meacham Boulevard, Fort Worth, TX.

FOR FURTHER INFORMATION CONTACT: Donald J. Day, Airspace Branch, Air

Traffic Division, Federal Aviation Administration, Southwest Region, Fort Worth, TX 76193–0520; telephone: (817) 222–5593.

SUPPLEMENTARY INFORMATION:

Comments Invited

Interested parties are invited to participate in this proposed rulemaking by submitting such written data, views, or arguments as they may desire. Comments that provide the factual basis supporting the views and suggestions presented are particularly helpful in developing reasoned regulatory decisions on the proposal. Comments are specifically invited on the overall regulatory, aeronautical, economic, environmental, and energy-related aspects of the proposal. Communications should identify the airspace docket number and be submitted in triplicate to the address listed under the caption **ADDRESSES**. Commenters wishing the FAA to acknowledge receipt of their comments on this notice must submit, with those comments, a self-addressed, stamped, postcard containing the following statement: ''Comments to Airspace Docket No. 99–ASW–08.'' The postcard will be date and time stamped and returned to the commenter. All communications received on or before the specified closing date for comments will be considered before taking action on the proposed rule. The proposal contained in this notice may be changed in the light of comments received. All comments submitted will be available for examination in the Office of the Regional Counsel, Southwest Region, Federal Aviation Administration, 2601 Meacham Boulevard, Fort Worth, TX, bothe before and after the closing date for comments. A report summarizing each substantive public contact with FAA personnel concerned with this rulemaking will be filed in the docket

Availability of NPRM's

Any person may obtain a copy of this Notice of Proposed Rulemaking (NPRM) by submitting a request to the Operations Branch, Air Traffic Division, Federal Aviation Administration, Southwest Region, Fort Worth, TX 76193–0520. Communications must identify the notice number of this NPRM. Persons interested in being placed on a mailing list for future NPRM's should also request a copy of Advisory Circular No. 11–2A that describes the application procedure.

The Proposal

The FAA is considering an amendment to 14 CFR part 71 to revoke the Class D airspace area at Dallas NAS, Dallas, TX. The FAA is taking this action due to the closure of Dallas NAS. The United States Navy no longer requires use of the airspace. The intended effect of this proposal is to revoke the Class D airspace at Dallas NAS since it is no longer needed.

The coordinates for this airspace docket are based on North American Datum 83. Designated Class D airspace areas are published in Paragraph 5000 of FAA Order 7400.9F, dated September 10, 1998, and effective September 16, 1998, which is incorporated by reference in 14 CFR 71.1. The Class D airspace designations listed in this document would be published subsequently in the order.

The FAA has determined that this proposed regulation only involves a revised body of technical regulations that require frequent and routine amendments to keep them operationally current. It, therefore—(1) is not a ''significant rule'' under ''significant regulatory action'' under Executive Order 12866; is not a DOT Regulatory Policies and Procedures (44 FR 11034; February 26, 1979); and (3) does not warrant preparation of a regulatory evaluation as the anticipated impact is so minimal. Since this is a routine matter that will only affect air traffic procedures and air navigation, it is certified that this rule, when promulgated, will not have a significant impact on a substantial number of small entities under the criteria of the Regulatory Flexibility Act.

List of Subjects in 14 CFR Part 71

Airspace, Incorporation by reference, Navigation (air).

The Proposed Amendment

In consideration of the foregoing, the Federal Aviation Administration proposes to amend 14 CFR part 71 as follows:

PART 71—DESIGNATION OF CLASS A, CLASS B, CLASS C, CLASS D, AND CLASS E AIRSPACE AREAS; AIRWAYS; ROUTES; AND REPORTING POINTS

1. The authority citation for 14 CFR part 71 continues to read as follows:

Authority: 49 U.S.C. 106(g), 40103, 40113, 40120, E.O. 10854, 24 FR 9565, 3 CFR, 1959–1963 Comp., 389.

§ 71.1 [Amended]

2. The incorporation by reference in 14 CFR 71.1 of the Federal Aviation Administration Order 7400.9F, *Airspace Designations and Reporting Points*, dated September 10, 1998, and effective September 16, 1998, is amended as follows:

Paragraph 5000 Class D airspace areas.

* * * * *

ASW TX D Dallas NAS Dallas, TX [Removed]

* * * * *

Issued in Fort Worth, TX on March 24, 1999.

Albert L. Viselli,

Acting Manager, Air Traffic Division, Southwest Region.

[FR Doc. 99–8022 Filed 3–31–99; 8:45 am]

BILLING CODE 4910–13–M

DEPARTMENT OF TRANSPORTATION

Coast Guard

33 CFR Parts 175, 177, 179, 181, and 183

46 CFR Parts 10, 15, 24, 25, 26, 28, 70, 169, and 175

[USCG–1999–5040]

RIN 2115–AF69

Safety of Uninspected Passenger Vessels Under the Passenger Vessel Safety Act of 1993 (PVSA)

AGENCY: Coast Guard, DOT.

ACTION: Advance notice of proposed rulemaking.

SUMMARY: The Coast Guard will propose regulations that implement safety measures for uninspected passenger vessels under the Passenger Vessel Safety Act of 1993 (PVSA). These regulations will implement the new class of uninspected passenger vessel of at least 100 gross tons, address the confusion regarding bareboat charters, provide for the issuance of special permits to certain uninspected passenger vessels, and develop specific manning, structural fire protection, operating, and equipment requirements for a limited fleet of PVSA exempted vessels. To obtain information needed to develop appropriate rules, the Coast Guard asks for comments from the public on the questions listed in this document.

DATES: Comments must reach the Docket Management Facility on or before June 30, 1999.

ADDRESSES: You may mail your comments to the Docket Management Facility, (USCG–1999–5040), U.S. Department of Transportation, room PL–401, 400 Seventh Street SW., Washington DC 20590–0001, or deliver them to room PL–401 on the Plaza level of the Nassif Building at the same address between 9 a.m. and 5 p.m., Monday through Friday, except Federal holidays. The telephone number is 202–366–9329.

The Docket Management Facility maintains the public docket for this rulemaking. Comments and documents, as indicated in this preamble, will become part of this docket and will be available for inspection or copying at room PL–401 on the Plaza level of the Nassif Building at the same address between 9 a.m. and 5 p.m., Monday through Friday, except Federal holidays. You may also access this docket on the Internet at http://www.dms.gov.

FOR FURTHER INFORMATION CONTACT: For questions on this notice, contact Lieutenant Keith B. Janssen, Office of Operating and Environmental Standards, (G–MSO–2), U.S. Coast Guard, telephone 202–267–1055. For questions on viewing, or submitting material to, the docket, contact Dorothy Walker, Chief, Documentary Services Division, Department of Transportation, telephone 202–366–9329.

SUPPLEMENTARY INFORMATION:

Request for Comments

The Coast Guard encourages you to participate in this rulemaking by submitting written data, views, or arguments. Persons submitting comments should include their names and addresses, identify this rulemaking (USCG–1999–5040) and the specific section of this document to which each comment applies, and give the reason for each comment. The Coast Guard will consider all comments received during the comment period. Please submit all comments and attachments in an unbound format, no larger than 8½ by 11 inches, suitable for copying and electronic filing to the Docket Management Facility at the address under **ADDRESSES**. Persons wanting acknowledgment of receipt of comments should enclose stamped self-addressed postcards or envelopes.

The Coast Guard plans no public hearing. You may request a public hearing by writing to the Docket Management Facility at the address under **ADDRESSES**. The request should include the reasons why a hearing would be beneficial. If it determines that the opportunity for oral presentations will aid this rulemaking, the Coast Guard will hold a public hearing at a time and place announced by a later notice in the **Federal Register**.

Background and Purpose

The Passenger Vessel Safety Act of 1993 (PVSA) (Pub. L. 103–206) was signed on December 20, 1993. The PVSA makes several changes to the laws for uninspected passenger vessels. First, the PVSA requires vessels less than 100 gross tons to be inspected as a small passenger vessel if they are:

- Carrying more than 6 passengers, at least one of whom is a passenger for hire, whether chartered or not;
- Carrying more than 6 passengers when chartered with the crew provided or specified; or
- Carrying more than 12 passengers when chartered with no crew provided.

Second, the PVSA establishes a new class of uninspected passenger vessel of at least 100 gross tons. This new class of uninspected passenger vessel is limited to:

- Carrying no more than 12 passengers, at least one of whom is a passenger for hire, whether chartered or not;
- Carrying no more than 12 passengers when chartered with the crew provided or specified; or
- Carrying no more than 12 passengers when chartered with no crew provided.

Uninspected passenger vessels, greater than 100 gross tons, that carry more than 12 passengers for hire are to be inspected as a passenger vessel under 46 CFR Subchapter H.

Third, the PVSA requires the Coast Guard to develop equipment, construction, and operating standards for uninspected passenger vessels greater than 100 gross tons.

Fourth, the PVSA allows the Coast Guard to develop regulations for special permits that allow the operation of uninspected passenger vessels as authorized in section 511 of the PVSA. These special circumstances and conditions were described in Senate Report 103–198 and include among other items that:

- Special permits for uninspected passenger vessels will only be issued for charitable purposes;
- That a certain vessel may only be granted a special permit a maximum of four times per year; and
- That an application for a special permit must be made to and approved by the cognizant Officer in Charge of Marine Inspection prior to the voyage.

Fifth, and finally, the PVSA eliminates confusion regarding the use of bareboat charter agreements for the carriage of passengers for hire. The previous statutory definition of 'passenger' did not limit a vessel from having an unlimited number of charterers (owners). Therefore, vessels that were not certificated by the Coast Guard were able to carry large numbers of people. The PVSA's narrow definition of 'passenger' subjected some formerly chartered vessels to Coast Guard inspection for certification for the first time. The PVSA allowed these vessels to apply for inspection with a phase-in period for compliance. The period for application expired June 21, 1994, and the period for compliance expired on December 21, 1996. With widespread public notification, several hundred charter vessels applied for and met the conditions for certification with the requirements of the PVSA and policy guidance of Navigation and Inspection Circular (NVIC) 7–94. This NVIC is available on the Internet at www.uscg.mil/hq/g-m/nvic/index90.htm. Additionally, the PVSA authorizes the Coast Guard to develop specific operating and equipment requirements for 16 charter vessels greater than 100 gross tons that met exemption criteria contained in the PVSA and NVIC 7–94.

The Coast Guard plans to develop regulations that will implement the new class of uninspected passenger vessel of at least 100 gross tons, address the confusion regarding bareboat charters, provide for the issuance of special permits to certain uninspected passenger vessels, and develop specific operating and equipment requirements for a limited fleet of PVSA exempted vessels.

Assistance for Small Entities

In accordance with section 213(a) of the Small Business Regulatory Enforcement Fairness Act of 1996 (Pub. L. 104–121), the Coast Guard wants to assist small entities in understanding this notice so that they can better evaluate the effects of any future rule on them and participate in the rulemaking process. If your small business or organization is affected by the PVSA and you have questions concerning its provisions or options for compliance, please contact Lieutenant Keith B. Janssen, Office of Operating and Environmental Standards, (G–MSO–2), U.S. Coast Guard, telephone 202–267–1055.

Questions

The Coast Guard asks the public for input on the issues discussed in this document. To help develop a proposed rule, the Coast Guard requests comments on the following questions, although comments on other issues addressed in this document are also welcome. When responding to questions, please explain your reasons for each answer and follow the instructions located under REQUEST FOR COMMENTS.

Questions 1 through 16 refer to uninspected passenger vessels of at least 100 gross tons

(1) The Coast Guard is seeking information regarding the size of the fleet of uninspected passenger vessels of

at least 100 gross tons. Therefore, the Coast Guard requests information regarding the total number of this type of vessel at port, regional, and national levels.

(2) At which ports are these vessels located? Do these vessels operate out of some specific port all year? If not, from which additional port(s) do they operate? Please identify some specific port(s) rather than a region. That helps the Coast Guard identify any port(s) with a large population of this class of vessel. Please indicate what percentage of the year these vessels are in each location.

(3) What type of safety equipment do these vessels ordinarily carry? What type of safety equipment, at a minimum, should the Coast Guard require these vessels to carry? Examples of safety equipment include, but are not limited to: Type I personal flotation devices; ring life buoys; life rafts; auxiliary vessels; emergency position indicating radio beacon (EPIRB); high water alarms; fire and smoke alarms/detectors; and other fire fighting equipment or systems. What standard(s) should the safety equipment meet? Examples of existing standards for safety equipment include, but are not limited to: American Yacht and Boat Council (AYBC); National Fire Protection Association (NFPA); or American Bureau of Shipping (ABS).

(4) What generally accepted construction standard(s) should these vessels meet? Examples of generally accepted construction standards include, but are not limited to: AYBC, NFPA, or ABS. Do any applications or systems on these vessels currently meet generally accepted standards? Which generally accepted standards normally apply to which application or systems? Examples of applications and systems include, but are not limited to: lifesaving equipment, heating/cooling facilities, marine sanitation devices, structural fire-protection devices, and electrical wiring.

(5) Do owners, operators, or charter brokers require a minimum level of licensing and experience for a vessel operator? If so, what are those requirements? What licensing requirements should the Coast Guard require for operators of uninspected passenger vessels of at least 100 gross tons?

(6) How many businesses operate a full-time or part-time charter or passenger-for-hire service operation for this type of vessel? What portion of these businesses employ less than 500 people?

(7) Are these vessels operated in passenger-for-hire service on a full-time or part-time basis? How often are these vessels used in personal or recreational service compared to the time these same vessels are used in passenger-for-hire service? Please indicate the time on an annual basis by days.

(8) What are current, advertised daily or weekly charter rates for this class of vessel? What are current, advertised daily or weekly passenger-for-hire service rates for this class of vessel? How will the implementation of the PVSA impact charter or passenger-for-hire service rates?

(9) How many days per year do these vessels currently operate in charter or passenger-for-hire service? How will the implementation of the PVSA impact the number of days per year that these vessels operate in charter or passenger-for-hire service?

(10) On average, how many hours per day do these vessels spend underway with at least one passenger for hire aboard?

(11) Are these vessels underway in the passenger-for-hire service more than 12 hours during a 24-hour period? If so, is this representative of normal operations or the occasional voyage? If possible, please identify the annual breakdown of passenger-for-hire service voyages less than and more than 12 hours duration in a 24-hour period. Please indicate this information by percentage.

(12) On which route(s) do these vessels operate routinely? On which route(s) do these vessels operate occasionally? Do traditional routes exist? If so, where?

(13) Are the majority of voyage itineraries for these vessels individually (custom) planned or are they regularly scheduled?

(14) What is the percentage breakdown between domestic and international voyages? Please indicate percentages on an annual basis.

(15) What are the major areas of concern regarding the impact that the implementation of the PVSA might have on the vessel fleet? Are there any generally recognized problems within the vessel fleet that should be addressed by regulation?

(16) What are other general areas of concern regarding possible regulatory action to implement the PVSA?

Question 17 refers to any uninspected passenger vessel

The PVSA allows the Coast Guard to develop regulations for special permits that allow the operation of uninspected passenger vessels as authorized in section 511 of the PVSA. These special circumstances and conditions were described in Senate Report 103–198 and include among other items that:

- Special permits for uninspected passenger vessels will only be issued for charitable purposes;
- That a certain vessel may only be granted a special permit a maximum of four times per year; and
- That an application for a special permit must be made to and approved by the cognizant Officer in Charge of Marine Inspection prior to the voyage.

(17) Based on this criteria, should the Coast Guard develop regulations to allow a special permit for uninspected passenger vessels? Please identify the reason(s) for your answer(s).

Dated: March 26, 1999.

R.C. North,

Assistant Commandant for Marine Safety and Environmental Protection.

[FR Doc. 99–8024 Filed 3–31–99; 8:45 am]

BILLING CODE 4910–15–P

ENVIRONMENTAL PROTECTION AGENCY

40 CFR Part 52

[MO 067–1067b; FRL–6315–8]

Approval and Promulgation of Implementation Plans; State of Missouri

AGENCY: Environmental Protection Agency (EPA).

ACTION: Proposed rule.

SUMMARY: The EPA proposes to approve the SIP revision submitted by the state of Missouri related to revisions to Missouri's Open Burning Rule (10 CSR 10–3.030) and Sampling Methods Rule (10 CSR 10–6.030). In the final rules section of this **Federal Register**, the EPA is approving the state's SIP submittal as a direct final rule without prior proposal, because the Agency views this as a noncontroversial submittal and anticipates no adverse comments. A detailed rationale for the approval is set forth in the direct final rule. If no adverse comments are received in response to this action, no further activity is contemplated. If the EPA receives adverse comments, the direct final rule will be withdrawn, and all public comments received will be addressed in a subsequent final rule based on this proposed rule. The EPA will not institute a second comment period. Any parties interested in commenting on this action should do so at this time.

DATES: Written comments must be received on or before May 3, 1999.

ADDRESSES: All comments should be addressed to Joshua A. Tapp at the

Environmental Protection Agency, Air Planning and Development Branch, 726 Minnesota Avenue, Kansas City, Kansas 66101.

Copies of the state submittals are available at the following addresses for inspection during normal business hours: Environmental Protection Agency, Air Planning and Development Branch, 726 Minnesota Avenue, Kansas City, Kansas 66101; and the Environmental Protection Agency, Air and Radiation Docket and Information Center, Air Docket (6102), 401 M Street, SW, Washington, DC 20460.

FOR FURTHER INFORMATION CONTACT: Joshua A. Tapp at (913) 551–7606.

SUPPLEMENTARY INFORMATION: For additional information see the direct final rule which is located in the rules section of this **Federal Register**.

Dated: March 16, 1999.

Dennis Grams,

Regional Administrator, Region VII.

[FR Doc. 99–7907 Filed 3–31–99; 8:45 am]

BILLING CODE 6560–50–P

FEDERAL COMMUNICATIONS COMMISSION

47 CFR Part 73

[MM Docket No. 99–94; RM–9532]

Radio Broadcasting Services; Hinton, IA

AGENCY: Federal Communications Commission.

ACTION: Proposed rule.

SUMMARY: The Commission requests comments on a petition filed by Mountain West Broadcasting proposing the allotment of Channel 267A at Hinton, Iowa, as the community's first local aural transmission service. Channel 267A can be allotted to Hinton in compliance with the Commission's minimum distance separation requirements with a site restriction of 1.8 kilometers (1.1 miles) south to avoid a short-spacing to the licensed site of Station KLQL(FM), Channel 266C2, Luverne, Minnesota. The coordinates for Channel 267A at Hinton are 42–36–43 North Latitude and 96–17–29 West Longitude.

DATES: Comments must be filed on or before May 17, 1999, and reply comments on or before June 1, 1999.

ADDRESSES: Federal Communications Commission, Washington, DC 20554. In addition to filing comments with the FCC, interested parties should serve the petitioner, his counsel, or consultant, as follows: Victor A. Michael, Jr., President, Mountain West Broadcasting, 6807 Foxglove Drive, Cheyenne, Wyoming 82009 (Petitioner).

FOR FURTHER INFORMATION CONTACT: Sharon P. McDonald, Mass Media Bureau, (202) 418–2180.

SUPPLEMENTARY INFORMATION: This is a synopsis of the Commission's Notice of Proposed Rule Making, MM Docket No. 99–94, adopted March 17, 1999, and released March 26, 1999. The full text of this Commission decision is available for inspection and copying during normal business hours in the FCC Reference Center (Room 239), 1919 M Street, NW., Washington, DC. The complete text of this decision may also be purchased from the Commission's copy contractor, International Transcription Service, Inc., (202) 857–3800, 1231 20th Street, NW., Washington, DC 20036.

Provisions of the Regulatory Flexibility Act of 1980 do not apply to this proceeding.

Members of the public should note that from the time a Notice of Proposed Rule Making is issued until the matter is no longer subject to Commission consideration or court review, all *ex parte* contacts are prohibited in Commission proceedings, such as this one, which involve channel allotments. See 47 CFR 1.1204(b) for rules governing permissible *ex parte* contacts.

For information regarding proper filing procedures for comments, see 47 CFR 1.415 and 1.420.

List of Subjects in 47 CFR Part 73

Radio broadcasting.

Federal Communications Commission.

John A. Karousos,

Chief, Allocations Branch, Policy and Rules Division, Mass Media Bureau.

[FR Doc. 99–8048 Filed 3–31–99; 8:45 am]

BILLING CODE 6712–01–P

FEDERAL COMMUNICATIONS COMMISSION

47 CFR Part 73

[MM Docket No. 99–95; RM–9533]

Radio Broadcasting Services; Dunkerton, IA

AGENCY: Federal Communications Commission.

ACTION: Proposed rule.

SUMMARY: The Commission requests comments on a petition filed by Mountain West Broadcasting proposing the allotment of Channel 280A at Dunkerton, Iowa, as the community's first local aural transmission service. Channel 280A can be allotted to Dunkerton in compliance with the Commission's minimum distance separation requirements with a site restriction of 8.9 kilometers (5.6 miles) north to avoid a short-spacing to the licensed site of Station KLTI–FM, Channel 281C, Ames, Iowa. The coordinates for Channel 280A at Dunkerton are 42–38–59 North Latitude and 92–10–32 West Longitude.

DATES: Comments must be filed on or before May 17, 1999, and reply comments on or before June 1, 1999.

ADDRESSES: Federal Communications Commission, Washington, DC 20554. In addition to filing comments with the FCC, interested parties should serve the petitioner, his counsel, or consultant, as follows: Victor A. Michael, Jr., President, Mountain West Broadcasting, 6807 Foxglove Drive, Cheyenne, Wyoming 82009 (Petitioner).

FOR FURTHER INFORMATION CONTACT: Sharon P. McDonald, Mass Media Bureau, (202) 418–2180.

SUPPLEMENTARY INFORMATION: This is a synopsis of the Commission's Notice of Proposed Rule Making, MM Docket No. 99–95, adopted March 17, 1999, and released March 26, 1999. The full text of this Commission decision is available for inspection and copying during normal business hours in the FCC Reference Center (Room 239), 1919 M Street, NW., Washington, DC. The complete text of this decision may also be purchased from the Commission's copy contractor, International Transcription Service, Inc., (202) 857–3800, 1231 20th Street, NW., Washington, DC 20036.

Provisions of the Regulatory Flexibility Act of 1980 do not apply to this proceeding.

Members of the public should note that from the time a Notice of Proposed Rule Making is issued until the matter is no longer subject to Commission consideration or court review, all *ex parte* contacts are prohibited in Commission proceedings, such as this one, which involve channel allotments. See 47 CFR 1.1204(b) for rules governing permissible *ex parte* contacts.

For information regarding proper filing procedures for comments, see 47 CFR 1.415 and 1.420.

List of Subjects in 47 CFR Part 73

Radio broadcasting.

Federal Communications Commission.

John A. Karousos,

Chief, Allocations Branch, Policy and Rules Division, Mass Media Bureau.

[FR Doc. 99–8050 Filed 3–31–99; 8:45 am]

BILLING CODE 6712–01–P

FEDERAL COMMUNICATIONS COMMISSION

47 CFR Part 73

[MM Docket No. 99–96; RM–9534]

Radio Broadcasting Services; Newell, SD

AGENCY: Federal Communications Commission.

ACTION: Proposed rule.

SUMMARY: The Commission requests comments on a petition filed by Mountain West Broadcasting proposing the allotment of Channel 288C2 at Newell, South Dakota, as the community's first local aural transmission service. Channel 288C2 can be allotted to Newell in compliance with the Commission's minimum distance separation requirements at city reference coordinates. The coordinates for Channel 288C2 at Newell are 44–43–00 North Latitude and 103–25–18 West Longitude.

DATES: Comments must be filed on or before May 17, 1999, and reply comments on or before June 1, 1999.

ADDRESSES: Federal Communications Commission, Washington, DC 20554. In addition to filing comments with the FCC, interested parties should serve the petitioner, his counsel, or consultant, as follows: Victor A. Michael, Jr., President, Mountain West Broadcasting, 6807 Foxglove Drive, Cheyenne, Wyoming 82009 (Petitioner).

FOR FURTHER INFORMATION CONTACT: Sharon P. McDonald, Mass Media Bureau, (202) 418–2180.

SUPPLEMENTARY INFORMATION: This is a synopsis of the Commission's Notice of Proposed Rule Making, MM Docket No. 99–96, adopted March 17, 1999, and released March 26, 1999. The full text of this Commission decision is available for inspection and copying during normal business hours in the FCC Reference Center (Room 239), 1919 M Street, NW., Washington, DC. The complete text of this decision may also be purchased from the Commission's copy contractor, International Transcription Service, Inc., (202) 857–3800, 1231 20th Street, NW., Washington, DC 20036.

Provisions of the Regulatory Flexibility Act of 1980 do not apply to this proceeding.

Members of the public should note that from the time a Notice of Proposed Rule Making is issued until the matter is no longer subject to Commission consideration or court review, all *ex parte* contacts are prohibited in Commission proceedings, such as this one, which involve channel allotments. See 47 CFR 1.1204(b) for rules governing permissible *ex parte* contacts.

For information regarding proper filing procedures for comments, see 47 CFR 1.415 and 1.420.

List of Subjects in 47 CFR Part 73

Radio broadcasting.

Federal Communications Commission.

John A. Karousos,

Chief, Allocations Branch, Policy and Rules Division, Mass Media Bureau.

[FR Doc. 99–8051 Filed 3–31–99; 8:45 am]

BILLING CODE 6712–01–P

FEDERAL COMMUNICATIONS COMMISSION

47 CFR Part 73

[MM Docket No. 99–97; RM–9535]

Radio Broadcasting Services; Manville, WY

AGENCY: Federal Communications Commission.

ACTION: Proposed rule.

SUMMARY: The Commission requests comments on a petition filed by Mountain West Broadcasting proposing the allotment of Channel 255C1 at Manville, Wyoming, as the community's first local aural transmission service. Channel 255C1 can be allotted to Manville in compliance with the Commission's minimum distance separation requirements at city reference coordinates. The coordinates for Channel 255C1 at Manville are 42–46–45 North Latitude and 104–37–02 West Longitude.

DATES: Comments must be filed on or before May 17, 1999, and reply comments on or before June 1, 1999.

ADDRESSES: Federal Communications Commission, Washington, DC 20554. In addition to filing comments with the FCC, interested parties should serve the petitioner, his counsel, or consultant, as follows: Victor A. Michael, Jr., President, Mountain West Broadcasting, 6807 Foxglove Drive, Cheyenne, Wyoming 82009 (Petitioner).

FOR FURTHER INFORMATION CONTACT: Sharon P. McDonald, Mass Media Bureau, (202) 418–2180.

SUPPLEMENTARY INFORMATION: This is a synopsis of the Commission's Notice of Proposed Rule Making, MM Docket No. 99–97, adopted March 17, 1999, and released March 26, 1999. The full text of this Commission decision is available for inspection and copying during normal business hours in the FCC Reference Center (Room 239), 1919 M Street, NW., Washington, DC. The complete text of this decision may also be purchased from the Commission's copy contractor, International Transcription Service, Inc., (202) 857–3800, 1231 20th Street, NW., Washington, DC 20036.

Provisions of the Regulatory Flexibility Act of 1980 do not apply to this proceeding.

Members of the public should note that from the time a Notice of Proposed Rule Making is issued until the matter is no longer subject to Commission consideration or court review, all *ex parte* contacts are prohibited in Commission proceedings, such as this one, which involve channel allotments. See 47 CFR 1.1204(b) for rules governing permissible *ex parte* contacts.

For information regarding proper filing procedures for comments, see 47 CFR 1.415 and 1.420.

List of Subjects in 47 CFR Part 73

Radio broadcasting.

Federal Communications Commission.

John A. Karousos,

Chief, Allocations Branch, Policy and Rules Division, Mass Media Bureau.

[FR Doc. 99–8052 Filed 3–31–99; 8:45 am]

BILLING CODE 6712–01–P

FEDERAL COMMUNICATIONS COMMISSION

47 CFR Part 73

[MM Docket No. 99–88, RM–9515]

Radio Broadcasting Services; Wells, NV

AGENCY: Federal Communications Commission.

ACTION: Proposed rule.

SUMMARY: The Commission requests comments on a petition filed by Mountain West Broadcasting seeking the allotment of Channel 280C1 to Wells, NV, as the community's first local aural service. Channel 280C1 can be allotted to Wells in compliance with the Commission's minimum distance separation requirements without the imposition of a site restriction, at coordinates 41–06–42 NL; 114–57–48 WL.

DATES: Comments must be filed on or before May 17, 1999, and reply comments on or before June 1, 1999.

ADDRESSES: Federal Communications Commission, 445 12th Street, S.W., Room TW–A325, Washington, DC 20554. In addition to filing comments with the FCC, interested parties should serve the petitioner, or its counsel or

consultant, as follows: Victor A. Michael, Jr., President, Mountain West Broadcasting, 6807 Foxglove Drive, Cheyenne, WY 82009 (Petitioner).

FOR FURTHER INFORMATION CONTACT: Leslie K. Shapiro, Mass Media Bureau, (202) 418–2180.

SUPPLEMENTARY INFORMATION: This is a synopsis of the Commission's Notice of Proposed Rule Making, MM Docket No. 99–88, adopted March 17, 1999, and released March 26, 1999. The full text of this Commission decision is available for inspection and copying during normal business hours in the FCC Reference Center (Room 239), 1919 M Street, NW., Washington, DC. The complete text of this decision may also be purchased from the Commission's copy contractor, International Transcription Services, Inc., (202) 857–3800, 1231 20th Street, NW, Washington, DC 20036.

Provisions of the Regulatory Flexibility Act of 1980 do not apply to this proceeding.

Members of the public should note that from the time a Notice of Proposed Rule Making is issued until the matter is no longer subject to Commission consideration or court review, all *ex parte* contacts are prohibited in Commission proceedings, such as this one, which involve channel allotments. See 47 CFR 1.1204(b) for rules governing permissible *ex parte* contacts.

For information regarding proper filing procedures for comments, see 47 CFR 1.415 and 1.420.

List of Subjects in 47 CFR Part 73

Radio broadcasting.

Federal Communications Commission.

John A. Karousos,

Chief, Allocations Branch, Policy and Rules Division, Mass Media Bureau.

[FR Doc. 99–8053 Filed 3–31–99; 8:45 am]

BILLING CODE 6712–01–P

FEDERAL COMMUNICATIONS COMMISSION

47 CFR Part 73

[MM Docket No. 99–89, RM–9516]

Radio Broadcasting Services; Caliente, NV

AGENCY: Federal Communications Commission.

SUMMARY: The Commission requests comments on a petition filed by Mountain West Broadcasting seeking the allotment of Channel 233C1 to Caliente, NV, as the community's first local aural service. Channel 233C1 can be allotted to Caliente in compliance with the Commission's minimum distance separation requirements without the imposition of a site restriction, at coordinates 37–36–54 NL; 114–30–48 WL.

DATES: Comments must be filed on or before May 17, 1999, and reply comments on or before June 1, 1999.

ADDRESSES: Federal Communications Commission, 445 12th Street, S.W., Room TW–A325, Washington, DC 20554. In addition to filing comments with the FCC, interested parties should serve the petitioner, or its counsel or consultant, as follows: Victor A. Michael, Jr., President, Mountain West Broadcasting, 6807 Foxglove Drive, Cheyenne, WY 82009 (Petitioner).

FOR FURTHER INFORMATION CONTACT: Leslie K. Shapiro, Mass Media Bureau, (202) 418–2180.

SUPPLEMENTARY INFORMATION: This is a synopsis of the Commission's Notice of Proposed Rule Making, MM Docket No. 99–89, adopted March 17, 1999, and released March 26, 1999. The full text of this Commission decision is available for inspection and copying during normal business hours in the FCC Reference Center (Room 239), 1919 M Street, NW., Washington, DC. The complete text of this decision may also be purchased from the Commission's copy contractor, International Transcription Services, Inc., (202) 857–3800, 1231 20th Street, NW, Washington, DC 20036.

Provisions of the Regulatory Flexibility Act of 1980 do not apply to this proceeding.

Members of the public should note that from the time a Notice of Proposed Rule Making is issued until the matter is no longer subject to Commission consideration or court review, all *ex parte* contacts are prohibited in Commission proceedings, such as this one, which involve channel allotments. See 47 CFR 1.1204(b) for rules governing permissible *ex parte* contacts.

For information regarding proper filing procedures for comments, see 47 CFR 1.415 and 1.420.

List of Subjects in 47 CFR Part 73

Radio broadcasting.

Federal Communications Commission.

John A. Karousos,

Chief, Allocations Branch, Policy and Rules Division, Mass Media Bureau.

[FR Doc. 99–8054 Filed 3–31–99; 8:45 am]

BILLING CODE 6712–01–P

FEDERAL COMMUNICATIONS COMMISSION

47 CFR Part 73

[MM Docket No. 98–22; RM–9183]

Radio Broadcasting Services; DeRuyter and Chittenango, NY

AGENCY: Federal Communications Commission.

ACTION: Proposed rule; dismissal of.

SUMMARY: The Commission, at the request of Cram Communications, LLC, dismisses its request to reallot Channel 286B from DeRuyter to Chittenango, NY, and modify its license for Station WVOA to specify Chittenango as its community of license. *See* 63 FR 11400, March 9, 1998. With this action, this proceeding is terminated.

FOR FURTHER INFORMATION CONTACT: Leslie K. Shapiro, Mass Media Bureau, (202) 418–2180.

SUPPLEMENTARY INFORMATION: This is a synopsis of the Commission's Report and Order, MM Docket No. 98–22, adopted March 17, 1999, and released March 26, 1999. The full text of this Commission decision is available for inspection and copying during normal business hours in the FCC Reference Center (Room 239), 1919 M Street, NW., Washington, DC. The complete text of this decision may also be purchased from the Commission's copy contractor, International Transcription Services, Inc., (202) 857–3800, 1231 20th Street, NW, Washington, DC 20036.

List of Subjects in 47 CFR Part 73

Radio broadcasting.

Federal Communications Commission.

John A. Karousos,

Chief, Allocations Branch, Policy and Rules Division, Mass Media Bureau.

[FR Doc. 99–8044 Filed 3–31–99; 8:45 am]

BILLING CODE 6712–01–P

FEDERAL COMMUNICATIONS COMMISSION

47 CFR Part 73

[MM Docket No. 99–91; RM–9529]

Radio Broadcasting Services; Manson, IA

AGENCY: Federal Communications Commission.

ACTION: Proposed rule.

SUMMARY: The Commission requests comments on a petition filed by Mountain West Broadcasting proposing the allotment of Channel 259A at

Manson, Iowa, as the community's first local aural transmission service. Channel 259A can be allotted to Manson in compliance with the Commission's minimum distance separation requirements at city reference coordinates. The coordinates for Channel 259A at Manson are 42–31–48 North Latitude and 94–32–00 West Longitude.

DATES: Comments must be filed on or before May 17, 1999, and reply comments on or before June 1, 1999.

ADDRESSES: Federal Communications Commission, Washington, DC 20554. In addition to filing comments with the FCC, interested parties should serve the petitioner, his counsel, or consultant, as follows: Victor A. Michael, Jr. President, Mountain West Broadcasting, 6807 Foxglove Drive, Cheyenne, Wyoming 82009 (Petitioner).

FOR FURTHER INFORMATION CONTACT: Sharon P. McDonald, Mass Media Bureau, (202) 418–2180.

SUPPLEMENTARY INFORMATION: This is a synopsis of the Commission's Notice of Proposed Rule Making, MM Docket No. 99–91, adopted March 17, 1999, and released March 26, 1999. The full text of this Commission decision is available for inspection and copying during normal business hours in the FCC Reference Center (Room 239), 1919 M Street, NW., Washington, DC. The complete text of this decision may also be purchased from the Commission's copy contractor, International Transcription Service, Inc., (202) 857–3800, 1231 20th Street, NW., Washington, DC 20036.

Provisions of the Regulatory Flexibility Act of 1980 do not apply to this proceeding.

Members of the public should note that from the time a Notice of Proposed Rule Making is issued until the matter is no longer subject to Commission consideration or court review, all *ex parte* contacts are prohibited in Commission proceedings, such as this one, which involve channel allotments. See 47 CFR 1.1204(b) for rules governing permissible ex parte contacts.

For information regarding proper filing procedures for comments, see 47 CFR 1.415 and 1.420.

List of Subjects in 47 CFR Part 73

Radio broadcasting.

Federal Communications Commission.

John A. Karousos,

Chief, Allocations Branch, Policy and Rules Division, Mass Media Bureau.

[FR Doc. 99–8045 Filed 3–31–99; 8:45 am]

BILLING CODE 6712–01–P

FEDERAL COMMUNICATIONS COMMISSION

47 CFR Part 73

[MM Docket No. 99–92; RM–9530]

Radio Broadcasting Services; Rudd, IA

AGENCY: Federal Communications Commission.

ACTION: Proposed rule.

SUMMARY: The Commission requests comments on a petition filed by Mountain West Broadcasting proposing the allotment of Channel 268A at Rudd, Iowa, as the community's first local aural transmission service. Channel 268A can be allotted to Rudd in compliance with the Commission's minimum distance separation requirements at city reference coordinates. The coordinates for Channel 268A at Rudd are 43–07–34 North Latitude and 92–54–20 West Longitude.

DATES: Comments must be filed on or before May 17, 1999, and reply comments on or before June 1, 1999.

ADDRESSES: Federal Communications Commission, Washington, DC 20554. In addition to filing comments with the FCC, interested parties should serve the petitioner, his counsel, or consultant, as follows: Victor A. Michael, Jr., President, Mountain West Broadcasting, 6807 Foxglove Drive, Cheyenne, Wyoming 82009 (Petitioner).

FOR FURTHER INFORMATION CONTACT: Sharon P. McDonald, Mass Media Bureau, (202) 418–2180.

SUPPLEMENTARY INFORMATION: This is a synopsis of the Commission's Notice of Proposed Rule Making, MM Docket No. 99–92, adopted March 17, 1999, and released March 26, 1999. The full text of this Commission decision is available for inspection and copying during normal business hours in the FCC Reference Center (Room 239), 1919 M Street, NW., Washington, DC. The complete text of this decision may also be purchased from the Commission's copy contractor, International Transcription Service, Inc., (202) 857–3800, 1231 20th Street, NW., Washington, DC 20036.

Provisions of the Regulatory Flexibility Act of 1980 do not apply to this proceeding.

Members of the public should note that from the time a Notice of Proposed Rule Making is issued until the matter is no longer subject to Commission consideration or court review, all *ex parte* contacts are prohibited in Commission proceedings, such as this one, which involve channel allotments. See 47 CFR 1.1204(b) for rules governing permissible *ex parte* contacts.

For information regarding proper filing procedures for comments, see 47 CFR 1.415 and 1.420.

List of Subjects in 47 CFR Part 73

Radio broadcasting.

Federal Communications Commission.

John A. Karousos,

Chief, Allocations Branch, Policy and Rules Division, Mass Media Bureau.

[FR Doc. 99–8046 Filed 3–31–99; 8:45 am]

BILLING CODE 6712–01–P

FEDERAL COMMUNICATIONS COMMISSION

47 CFR Part 73

[MM Docket No. 99–93; RM–9531]

Radio Broadcasting Services; Pleasantville, IA

AGENCY: Federal Communications Commission.

ACTION: Proposed rule.

SUMMARY: The Commission requests comments on a petition filed by Mountain West Broadcasting proposing the allotment of Channel 242A at Pleasantville, Iowa, as the community's first local aural transmission service. Channel 242A can be allotted to Pleasantville in compliance with the Commission's minimum distance separation requirements with a site restriction of 4.9 kilometers (3.0 miles) east to avoid a short-spacing to the licensed site of Station KSOM(FM), Channel 243C1, Audubon, Iowa. The coordinates for Channel 242A at Pleasantville are 41–23–59 North Latitude and 93–14–36 West Longitude.

DATES: Comments must be filed on or before May 17, 1999, and reply comments on or before June 1, 1999.

ADDRESSES: Federal Communications Commission, Washington, DC 20554. In addition to filing comments with the FCC, interested parties should serve the petitioner, his counsel, or consultant, as follows: Victor A. Michael, Jr., President, Mountain West Broadcasting, 6807 Foxglove Drive, Cheyenne, Wyoming 82009 (Petitioner).

FOR FURTHER INFORMATION CONTACT: Sharon P. McDonald, Mass Media Bureau, (202) 418–2180.

SUPPLEMENTARY INFORMATION: This is a synopsis of the Commission's Notice of Proposed Rule Making, MM Docket No. 99–93, adopted March 17, 1999, and released March 26, 1999. The full text of this Commission decision is available for inspection and copying during

normal business hours in the FCC Reference Center (Room 239), 1919 M Street, NW., Washington, DC. The complete text of this decision may also be purchased from the Commission's copy contractor, International Transcription Service, Inc., (202) 857–3800, 1231 20th Street, NW., Washington, DC 20036.

Provisions of the Regulatory Flexibility Act of 1980 do not apply to this proceeding.

Members of the public should note that from the time a Notice of Proposed Rule Making is issued until the matter is no longer subject to Commission consideration or court review, all *ex parte* contacts are prohibited in Commission proceedings, such as this one, which involve channel allotments. See 47 CFR 1.1204(b) for rules governing permissible *ex parte* contacts.

For information regarding proper filing procedures for comments, see 47 CFR 1.415 and 1.420.

List of Subjects in 47 CFR Part 73

Radio broadcasting.

Federal Communications Commission.

John A. Karousos,

Chief, Allocations Branch, Policy and Rules Division, Mass Media Bureau.

[FR Doc. 99–8047 Filed 3–31–99; 8:45 am]

BILLING CODE 6712–01–P

Notices

Federal Register
Vol. 64, No. 62
Thursday, April 1, 1999

This section of the FEDERAL REGISTER contains documents other than rules or proposed rules that are applicable to the public. Notices of hearings and investigations, committee meetings, agency decisions and rulings, delegations of authority, filing of petitions and applications and agency statements of organization and functions are examples of documents appearing in this section.

AGENCY FOR INTERNATIONAL DEVELOPMENT

Establishment of the U.S. Agency for International Development as an Executive Agency

AGENCY: U.S. Agency for International Development.

ACTION: Notice.

SUMMARY: The U.S. Agency for International Development (''USAID'') gives notice of the establishment of USAID as an Executive agency and the abolition of the U.S. International Development Cooperation Agency (''IDCA''). Under the provisions of the Foreign Affairs Reform and Restructuring Act of 1998, as contained in Public Law 105–277, IDCA was abolished and USAID was established as an Executive agency, effective April 1, 1999.

DATES: Effective April 1, 1999.

FOR FURTHER INFORMATION CONTACT: Jan Miller, Office of General Counsel, 202–712–4174; jmiller @usaid.gov.

SUPPLEMENTARY INFORMATION: Under the provisions of the Foreign Affairs Reform and Restructuring Act of 1998, as contained in Public Law 105–277, IDCA was abolished and USAID was established as an Executive agency, effective April 1, 1999.

Elsewhere in this issue of the **Federal Register**, USAID has amended chapter II of title 22 of the Code of Federal Regulations to delete the reference to IDCA. The abolition of IDCA does not affect the status and validity of USAID regulations, directives, rulings, policies; they continue in effect.

Singleton B. McAllister,

General Counsel.

[FR Doc. 99–7969 Filed 3–31–99; 8:45 am]

BILLING CODE 6116–01–M

DEPARTMENT OF AGRICULTURE

Farm Service Agency

Commodity Credit Corporation

Notice of Request for Extension of a Currently Approved Information Collection

AGENCIES: Farm Service Agency and the Commodity Credit Corporation, USDA.

ACTION: Notice and request for comments.

SUMMARY: In accordance with the Paperwork Reduction Act, this notice announces the Farm Service Agency's (FSA) intention to request an extension for a currently approved information collection. This information is used to support payment eligibility determinations for the Conservation Reserve Program, the Price Support Program, and the Production Flexibility Contract Program authorized by the Agricultural Marketing Transition Act.

DATES: Comments on this notice must be received on or before June 1, 1999 to be assured consideration.

Additional Information and Comments: Contact James Baxa, Agricultural Program Specialist, Production, Emergencies, and Compliance Division, Farm Service Agency, United States Department of Agriculture, STOP 0517, 1400 Independence Avenue, SW, Washington, DC 20250–0517, (202) 720–4189, facsimile (202) 720–4941.

SUPPLEMENTARY INFORMATION:

Title: Payment Eligibility and Payment Limitation Determinations for the receipt of program benefits under the Conservation Reserve Program, Price Support Program, and the Production Flexibility Contract Program.

OMB Control Number: 0560–0096.

Expiration Date of Approval: April 30, 1999.

Type of Request: Extension and revision of a currently approved information collection.

Abstract: The collection of this information is necessary to determine the eligibility of individuals and entities for program payments for various programs administered by Farm Service Agency, on behalf of the Commodity Credit Corporation, including the Conservation Reserve Program, Price Support Programs, and the Production Flexibility Contract Program. The regulations at 7 CFR part 1400 provide for an ''actively engaged in farming'' determination be made for individuals or entities, with respect to a particular farming operation, in order to determine their eligibility for payments under covered programs. The regulations at 7 CFR part 1400 also require a determination of ''person'' as defined in the same regulations for the use in limiting payments to an amount specified in each of the covered programs. These programs impact a potential participant universe of 2,000,000 respondents. Forms CCC–502A, CCC–502B, CCC–502C, CCC–502D, CCC–502EZ, CCC–501A, and CCC–501B will continue to be used for making determinations under part 1400, as will ASCS–561, ASCS–561A, and ASCS–561B, which are used for these purposes in connection with the Conservation Reserve Program. The forms are not required to be completed on an annual basis. Once the appropriate forms are submitted and the corresponding determinations made, the producer is not required to provide this information again, unless there is a substantial change in the farming operation or status of the producer requesting program benefits that would affect the payment eligibility and payment limitation determinations previously made.

Estimate of Burden: Public reporting burden for this collection of information is estimated to be 52 minutes per response.

Respondents: Producers who, as owner, landlord, tenant, or sharecropper, are involved in the farming operations and who would seek benefits under the Conservation Reserve Program, Price Support and the Production Flexibility Contract Programs.

Estimated Number of Respondents: 351,960.

Estimated Number of Responses per Respondent: To determine initial eligibility or when a substantial change in operations or status occurs. .

Estimated Total Burden Hours: 305,032.

Proposed topics for comment include, but are not limited to: (1) Whether the collection of information is necessary for the proper performance of the functions of the agency, including whether the information will have practical utility; (2) the accuracy of the

agency's estimate of burden including the validity of the methodology and assumptions used; (3) ways to enhance the quality, utility and clarity of the information to be collected; or (4) ways to minimize the burden of collection on those who are to respond, including the use of appropriate automated, electronic, mechanical, or other technological collection techniques or other forms of informational technology. Comments regarding this information collection requirement should be directed to the Office of Information and Regulatory Affairs, Office of Management and Budget, Attention: Desk Officer for Agriculture, Washington, DC 20503, and to Diane Sharp, Director, Production, Emergencies, and Compliance Division, Farm Service Agency, United States Department of Agriculture, STOP 0517, Room 4754-South Building, 1400 Independence Avenue, SW, Washington, DC 20250–0517.

All responses to this notice will be summarized and included in the request for OMB approval. All comments also will become a matter of public record.

Signed at Washington, D.C., on March 24, 1999.

Parks Shackelford,

Acting Administrator, Farm Service Agency, and Acting Executive Vice President, Commodity Credit Corporation.

[FR Doc. 99–7873 Filed 3–31–99; 8:45 am]

BILLING CODE 3410–05–P

DEPARTMENT OF AGRICULTURE

Forest Service

Significant Amendment of the Land and Resource Management Plan of the Ouachita National Forest for Managing Approximately 111,580 Acres of Acquired Lands in McCurtain County, OK

AGENCY: Forest Service, USDA.

ACTION: Notice of intent to prepare an environmental impact statement.

SUMMARY: Pursuant to 16 U.S.C. 1604(f)(4), the Forest Service will prepare an environmental impact statement (EIS) for the decision to amend the Land and Resource Management Plan (Forest Plan) for the Ouachita National Forest. Comments should focus specifically on the preliminary proposal described below and on possible alternatives.

The current Forest Plan, which provides programmatic guidance for management of the Ouachita National Forest, was implemented in 1986 and subsequently has been amended 30 times (including a significant amendment in 1990 that resulted in the publication of a new Forest Plan.) As many as six primary decisions may be made in the amendment described in this notice: (a) Modification of forest-wide goals, objectives, standards, and/or guidelines (if needed); (b) allocation of lands and waters to management areas; (c) identification of lands suitable for timber production; (d) re-determination of forest-wide allowable sale quantity (ASQ) (if needed); (e) identification of lands suitable and potentially available for cattle grazing; and (f) determination of the eligibility and suitability of the Glover and Mountain Fork Rivers for possible Congressional designation under the National Wild and Scenic River System (NWSRS).

Significant amendments to Forest Plans follow the same procedures required for the development and approval of forest plans (36 CFR part 219.10(f)), including completion of an EIS. The Forest Service determined that the amendment discussed in this notice will be significant because (a) it will establish goals, objectives, management areas, standards, and guidelines for a block of approximately 111,580 acres of acquired lands newly added to the National Forest System (the ''Broken Bow unit'') and (b) as a result of allocating these lands to management areas, this amendment may change the overall desired future condition of the Ouachita National Forest. An EIS is also needed because the analysis conducted during the amendment process may result in a recommendation to Congress concerning possible additions to the NWSRS.

As part of the overall effort to ensure that treaty rights are honored and responsibilities to American Indian Tribes are met, the Forest Service will consult and exchange information routinely with affected and interested Tribes on a government-to-government basis throughout this amendment process. The Forest Service will also work closely with local governments, State and Federal agencies, and elected officials.

The environmental analysis and decision-making process will include the following opportunities for public participation and comment:

Estimated date	Step	Public involvement
Late March 1999	Publish formal Notice of Intent (with preliminary proposal).	30-day formal comment period; Newsletter; press releases, Web site.
Mid-May 1999	Summarize issues in response to the proposal and amendment.	Workshop Newsletter, Web page update.
By mid-June 1999	Develop alternatives	Mailing, Web page update; Workshop and informal meetings, if needed.
July 1999	Issue draft EIS	Invite public comment; 90-day formal review; Workshop and informal meetings; Newsletter, press releases, Web site update.
December 1999	Issue amendment and EIS	Newsletter, press releases, Web site update.

The Forest Service will meet with interested groups, organizations, and individuals to discuss the proposed amendment. The agency will also host at least one workshop in McCurtain County, Oklahoma, to present and clarify the preliminary proposal, describe ways the public can participate in the process, and accept comments from the public on the proposal for amending the Forest Plan. The Forest Service will also consider comments received at any time during the amendment process.

Following the publication of this Notice of Intent (NOI), a draft EIS will be prepared and published. The draft EIS will include a preferred alternative with specific language to amendment the Forest Plan. This preferred alternative will be developed based on issues that are raised in response to the preliminary proposal presented in this NOI. The Forest Service will then again actively seek information, comments, and assistance from Federal, State and local agencies and from individuals and organizations that may be interested in or affected by the preferred alternative in the draft EIS. It is very important that

those interested in this proposal participate at that time.

DATES: Comments responding to this Notice of Intent (NOI) should be received in writing (electronic mail acceptable) by April 30, 1999. The draft EIS should be available for public review in July 1999. The comment period for the draft EIS will commence on the day the Environmental Protection Agency publishes the Notice of Availability in the **Federal Register.** After a comment period of 90 days, the Final EIS and Forest Plan Amendment should be completed by December 1999.

ADDRESSES: Send written comments concerning this Notice to: Plan Amendment, Ouachita National Forest, P.O. Box 1270, Hot Springs, AR 71902, for send electronic mail to: <mcit/r8__ouachita@fs.fed.us>

All comments received about the Forest Plan amendment, including the names and addresses of those who comment, will be considered part of the public record concerning this proposed action and will be available for public inspection. Comments submitted anonymously will be accepted and considered; however, those who submit anonymous comments will not have standing to appeal the subsequent decision under 36 CFR part 217.

FOR FURTHER INFORMATION CONTACT: John Cleeves, Forest Planner, Ouachita National Forest, (501) 321–5251; or Bill Pell, Acting Team Leader for Planning and Recreation, (501) 321–5320; TDD (501) 321–5307.

SUPPLEMENTARY INFORMATION:

Purpose and Need To Amend the Forest Plan (Why Is the Forest Service Proposing To Amend the Ouachita National Forest Plan?

In November 1996, approximately 111,300 acres were added to the Ouachita National Forest in the north-central portion of McCurtain County, Oklahoma, as a result of a major land exchange. Approximately 28,093 acres of land in the southeastern corner of the county were subtracted from the National Forest System at the same time. As part of this land exchange, the Forest Service also acquired lands in Le Flore County, Oklahoma and several Arkansas counties and disposed of additional National Forest System lands in Arkansas. Lands added to the Ouachita National Forest in these counties were addressed in Amendment 30 to the Forest Plan. The amendment described in this NOI deals only with lands acquired in McCurtain County. (In addition to lands acquired through the exchange, the Ouachita National Forest purchased approximately 280 acres that are now included in the Broken Bow unit.)

The Federal legislation that authorized the land exchange (Omnibus Parks and Public Lands Management Act of 1996) specified that the Forest Service would manage these acquired lands and waters (here and in other counties) under the forestwide standards and guidelines in the existing Forest Plan until the acquired lands were incorporated in the Plan through a formal amendment process. The legislation further stipulated that the Forest Service would initiate the process to incorporate these lands and waters in the Forest Plan within 12 months after the exchange was completed. (An interdisciplinary team was formed and work began within the prescribed 12-month period.) The purpose of this amendment, then, is to establish the goals, objectives, management areas, standards, and guidelines under which the acquired lands in question will be managed.

Topics To Be Addressed (What Topics Will Be Addressed in the Forest Plan Amendment and How Were They Determined?)

Forest Plans provide programmatic frameworks for decision-making on each National Forest. Each Plan sets forth goals, objectives, advisable courses of action, and limitations to actions. These advisable courses and limitations to actions are called standards and guidelines. Some standards and guidelines apply forestwide. Others apply only to specific subdivisions of the National Forest called Management Areas. The National Forest Management Act and associated agency regulations (36 CFR part 219.10(f)) provide direction for amendment Forest Plans.

To set the stage for this amendment, the Forest Service developed a preliminary list of topics likely to be relevant to the decision-making process. This list was based on a review of legal requirements; current conditions in the Broken Bow unit, including social, cultural, economic, and environmental factors; and public interest. The interdisciplinary team also considered the results of monitoring and evaluation activities, Forest Plan and project level appeal issues and decisions, lawsuit issues and decisions, new scientific information, changing public demands, and Forest Service direction concerning ecosystem management and the Natural Resource Agenda. This amendment will address the following broad topics, among others: Recreation; Off-Road Vehicles; Threatened, Endangered, and Sensitive Species; Transportation System; Roadless Areas; Timber Suitability and Allowable Sale Quantity; Wild and Scenic Rivers; Range (cattle grazing) and Vegetation Patterns.

The Forest Service has prepared a brief discussion paper for each amendment topic. These papers (available at www.fs.fed.us/oonf/mccurtain/papers2.htm) define topics in the context of related Forest Plan decisions to be made, the existing situation on the Broken bow unit, and current Forest Plan direction. The proposal described later in this Notice is an attempt to integrate the concerns and opportunities presented by each of the broad topics summarized below.

Recreation: Public interest in enhancing recreation and tourism opportunities in southeastern Oklahoma was a strong factor in local and State support for the land exchange. Among the prominent features of the Broken Bow unit are 10 miles of the Mountain Fork River, more than 14 miles of the Glover River, proximity to the 14,000-acre Broken Bow lake, steep forested ridges, large areas of pine plantations, and an extensive road network. Rugged topography, natural stands of oak and pine, and lack of road access on the northwest, north, and east sides of the lake contrast with less severe topography, extensive pine plantations, and many miles of low standard roads on the west. These lands and waters offer a great variety of recreational opportunities.

Places of high visual sensitivity include those within the view of heavily traveled roads and trails, recreation areas, and other scenic vistas in the area. The U.S. Army Corps of Engineers manages Broken Bow Lake and much of its shoreline. The Oklahoma Tourism and Recreation Department and the Oklahoma Department of Wildlife Conservation manage other parts of the shoreline (some under lease arrangement with the Corps) and portions of the uplands around the lake, including McCurtain County Wilderness Area, which is nearly surrounded by National Forest land.

The general area already receives considerable recreation use from local residents and many people who travel from Texas, elsewhere in Oklahoma, and other states. Dallas/Ft. Worth, Tulsa, and Oklahoma City are within a half-day's drive of these lands. People are attracted to the area for its natural settings on both public and timber industry lands and for the various recreation facilities currently available. Beaver's Bend-Hochatown State Park, located on the west shore of the lake, is one of the most popular parks in Oklahoma; a Corps recreation area (managed by the State of Oklahoma) on

the lower Mountain Fork River provides an additional draw. Facilities at these State and Federal recreation areas include 8 campgrounds with nearly 400 campsites, the 40-room Lakeview Lodge, a nature/education center, 47 cabins, picnic and swimming areas, a marina, numerous boat launching ramps, a system of hiking trails, and a golf course.

Broken Bow Lake is a major attraction for fishing and boating enthusiasts. The lower part of the Mountain Fork is a stocked trout fishery, and the Glover River is considered the finest smallmouth bass fishery in Oklahoma. Both the Glover and Mountain Fork Rivers receive considerable use by anglers and floaters.

Off-road Vehicles: ORV use is a popular activity on the acquired lands, which have a high density of low standard roads that provide access to thousands of acres of pine plantations. These roads have traditionally been open to ORV riding (when they were in private ownership). However, current Oklahoma State law prohibits ORV riding on public roads, including National Forest roads. Because of the rugged terrain north and east of the lake and low road density, ORV use there is probably restricted to the road system and lake access points. Little is known about the extent or nature of any resource damage due to ORV use in the area. Some members of the public support allowing continued ORV use in the area; others would like to see some restrictions, such as limiting cross-country travel to that necessary to transport game.

Threatened, Endangered, Sensitive Species: Another selling point for the land exchange was that it would offer enhanced opportunities for conservation of threatened, endangered, and sensitive species on public lands, particularly in McCurtain County, Oklahoma. For starters, the sections of the Mountain Fork and Glover Rivers and their tributaries within the Broken Bow unit contain some of the richest aquatic faunas in Oklahoma, including populations of the threatened leopard darter (*Percina pantherina*), several species the Forest Service lists as ''sensitive'' or as candidates for listing as sensitive, and important sport fishes. The U.S. Fish and Wildlife Service has designated portions of the two rivers as Critical Habitat for the leopard darter.

The red-cockaded woodpecker (*Picoides borealis*) occurs in the McCurtain County Wilderness Area, which is owned by the state of Oklahoma and managed by the Oklahoma Department of Wildlife Conservation. This endangered species has been observed foraging on adjacent National Forest land but is not known to nest there. The Nature Conservancy found four sites showing evidence of occupation or offering prime habitat for red-cockaded woodpeckers during a 1995 ecological assessment of what are now national forest lands: Locust Mountain, Hee Mountain, Little White Oak Mountain, and Five Mile Hollow.

The endangered peregrine falcon (*Falco peregrinus anatum*) has been observed near Brokem Bow Lake as a transient during migration. There is a high probability that this species roosts on National Forest land near the lake. The threatened bald eagle (*Haliaeetus leucocephalus*) uses habitat along the Mountain Fork River in the vicinity of Broken Bow Lake in the winter, roosting on the National Forest. Based on recent summer observations, biologists suspect that bald eagles may also nest in the vicinity.

Another federally listed species that may occur in the Broken Bow unit is the endangered American burying beetle (*Nicrophorus americanus*). Due to the similarity of habitat types present on these lands to occupied habitats elsewhere on the National Forest, there is potential for this species to occur in the Broken Bow unit. Several other sensitive species occur within the unit. See the topic paper concerning Terrestrial Threatened, Endangered, and Sensitive Species for further information.

Transportation System: The acquired lands include an extensive road network that was developed by Weyerhaeuser Company for intensive timber management. The roads and associated drainage structures vary considerably in width, design standards, and general condition. An inventory of the existing roads on the Broken Bow unit identified about 566 miles on National Forest land (a road density of 3.26 miles per square mile).

Roadless Areas: The Forest Service maintains inventories of land areas that have few or no permanent roads. During Forest Plan revision, the agency conducts a public review of options for all ''roadless areas,'' and one or more of these areas could eventually be recommended to Congress for wilderness designation. It is important to note that no wilderness determination will be made during the Forest Plan amendment process.

Areas of National Forest land that appear to fit current Forest Service criteria for roadless character are the 7,356-acre Ashford Peak area on the east side of Broken Bow Lake and the 7,285-acre Bee Mountain area on the west side of the lake. Weyerhaeuser reserved oil and gas rights until the year 2041 on the Ashford Peak area and on a small portion of the Bee Mountain area; all minerals are outstanding on the bulk of Bee Mountain. Reserved or outstanding mineral rights do not necessarily disqualify an area from being ''roadless,'' especially if mineral rights are obtainable and/or there is no surface occupancy or development. Currently no development exists in either area. The State-owned McCurtain County Wilderness Area lies in the northern part of the block of National Forest lands under consideration here.

Vegetation Patterns: Based on analysis of satellite imagery from May 1998, the team estimated that there are about 61,600 acres where pines predominate the forest canopy and at lest 46,000 where hardwoods predominate. Roads and other nonforested conditions occupy about 4,000 acres. More than half of the pine-dominated acreage consists of loblolly pine plantations less than 30 years old; the remainder consists of more natural forest cover in which shortleaf pines predominate. The pine plantations average 110 acres in size, but several exceed 200 acres. As more detailed, ground-based forest inventories are completed, these estimates will be refined. The team recognizes that many members of the public are concerned about conserving hardwood trees and conserving or restoring older forests and woodlands of all kinds.

Timber Suitability and Allowable Sale Quantity (ASQ): Timber management on the Ouachita National Forest is designed to perpetuate native forests, sustain habitat for viable populations of native plants and animals (including sensitive species), protect water quality and aesthetic values, yield valuable timber products, and support local economic activity. National Forest lands ''suitable'' for timber production (as one element of their management) are those that are physically and legally capable of supporting timber harvests and timber regeneration activities on a regulated and sustained basis. The ASQ is the volume of timber that may be sold annually from the ''suitable'' lands covered by the Forest Plan. Prior to the exchange, the suitable land base was approximately 994,000 acres, and the ASQ was 29.2 million cubic feet (144 million board feet).

The Broken Bow unit includes a mix of cutover lands, loblolly pine plantations, and mixed pine-hardwood stands of varying densities and age classes, while the portions of the Tiak tract traded to Weyerhaeuser consisted mainly of well-stocked sawtimber stands on highly productive coastal

plain sites. These changes in the National Forest land base may result in a change of lands suitable for timber harvest and the corresponding ASQ.

Wild and Scenic Rivers: River eligibility studies are carried out in accordance with the Wild and Scenic Rivers Act and the Final Revised Guidelines for Eligibility, Classification, and Management of River Areas (Federal Register 9/7/82) of the U.S. Department of the Interior and the U.S. Department of Agriculture. To be eligible for inclusion in the National Wild and Scenic Rivers System, a river must be free flowing and have one or more outstanding remarkable scenic, recreational, geological, fish and wildlife, archeological/historical, or other features. The planning team has conducted eligibility studies for portions of the Glover and Mountain Fork Rivers.

Range (cattle grazing): Cattle grazing is a traditional use of the acquired lands that developed over many years when the lands were in private ownership. This activity and land use is a source of income for some local cattle owners. Cattle grazing has long been recognized as one of the important multiple uses of National Forest land when managed in a way that ensures protection of ecological values.

Curently 19 individuals have temporary permits to use portions of the acquired lands to graze about 1,000 head of cattle. (These permittees had grazing permits with Weyerhaeuser for these lands prior to the exchange.) Many of these are ''on/off'' permits, with the cattle grazing freely between private lands and National Forest lands. The majority of National Forest lands are included in the permit areas, but most of the grazing occurs on roadsides and in young plantations that have not reached crown closure. There are few fences on the property lines.

While some of the following additional topics will be discussed in the draft EIS, no specific decisions concerning them will be made in this amendment:

1. Location of grazing allotments, identification of individual grazing permittees, or specific conditions for grazing (such as number of animals allowed, permitted use periods, range improvements).
2. Project-level decisions such as construction of recreation facilities (e.g., trails or campgrounds) and identification of individual timber sales or road closures.
3. Level of funding the county will receive in any given year from ''25 percent returns.'' (The Forest Service annually returns 25 percent of all gross revenues to counties with National Forest lands; the EIS will discuss the possible effects of the Forest Plan decisions on 25 percent returns.)
4. Ecological restoration of native forests in loblolly pine plantations. (Restoration will be the subject of another Forest Plan amendment.)
5. Relationships with neighboring landowners (including road easements and property lines).
6. Community development. (The Forest Service supports community development activities and recognizes that Forest Plan decisions may influence development opportunities and quality of life in local communities. The draft EIS will examine possible economic and social impacts to local communities and at a broader regional level.)

Preliminary Proposal

The Forest Service has prepared a preliminary proposal to address the six primary decisions and now seeks comments on this proposal. Comments received will be used to develop alternatives to the preliminary proposal.

(1) Modification of forest-wide goals, objectives, standards, and/or guidelines (if needed): The Forest Service does not believe that such modifications are warranted at this time. In other words, the preliminary proposal is to manage the acquired lands in the Broken Bow unit under the current forest-wide goals and objectives of the Forest Plan.

(2) Allocation of lands and waters to management areas: Allocate the approximately 111,580 acres of the Broken Bow unit as described below. (Unless noted otherwise, Management Area numbers refer to those in the current Forest Plan.). All acreage estimates are subject to change on the basis of future site-specific analysis and planning. Items (a) through (d) describe the Management Area allocations that can be readily displayed at the scale of a Forest map. Items (e) through (j) describe those Management Areas that cannot be displayed on a Forest map scale. A map displaying the four allocations (Management Areas 20, 22, and 23 and ''General Forest'') is available for public review at 100 Reserve Street, Federal Building, Second Floor, Hot Springs, Arkansas and on the Internet at: *www.fs.fed.us/oonf/mccurtain/*.

(a) General Forest (typically a combination of Management Areas 9, 10, 11, 12, 13, 14, and 18, but may also include others): approximately 29,885 acres. Management Area 14 (Lands Suitable for Timber Production, Ouachita Mountains) usually is the most prominent in this mix of Management Areas. This area includes lands of moderate to low productivity (e.g., site indices are at least 50 for shortleaf pine and 60 for hardwoods) that have not been assigned to more restrictive Management Areas. Much of the timber produced on the Ouachita National Forest comes from Management Area 14, but these lands also help meet vital wildlife habitat, watershed protection, and recreation needs.

(b) Management Area 20—Wild and Scenic River Corridors: approximately 6,735 acres (all unsuitable for timber production). Management Area 20 consists of corridors of rivers eligible or potentially eligible for inclusion in the National Wild and Scenic Rivers System. Within the Broken Bow unit, segments of the Mountain Fork and Glover Rivers would be included in this Management Area.

(c) Management Area 22-Shortleaf Pine-Bluestem Renewal and Red-Cockaded Woodpecker Habitat Management Area: approximately 51,110 acres (including lands suitable and unsuitable for timber production). Management Area 22 includes National Forest lands that historically provided or currently provide nesting and/or foraging habitat for the red-cockaded woodpecker and that are dedicated to renewal of the shortleaf pine-bluestem grass ecosystem. Forest management activities include periodic thinning, prescribed fire, and regeneration by the two-aged shelterwood method. No actions would be taken that would diminish the roadless characteristics of inventoried roadless areas within this Management Area.

(d) Management Area 23 (new to the Forest Plan)—Broken Bow Lake (area): approximately 23,850 acres (including lands suitable and unsuitable for timber production). Management Area 23 would include lands that can be seen from the main part of the lake and most other National Forest lands east of Highway 259 and south of the proposed boundary of Management Area 22. The emphasis would be on conserving and enhancing the area's unique combination of recreational,

aesthetic, wildlife habitat, and water quality values and benefits.

The following Management Areas cannot be displayed at the fairly coarse scale of a Forest map. Some of the ones likely to be applied to the Broken Bow Unit by the Forest Plan amendment include:

(e) Management Area 9—Water and Riparian Areas (ponds, lakes, streamside zones, and riparian areas; streamside zones have minimum widths of 100 feet to both sides of perennial streams and 30 feet both sides of all other streams), all considered unsuitable for timber production: approximately 12,600 acres plus approximately 11,550 acres of equivalent streamside management zones in Management Area 22 for a total of approximately 24,150 acres in streamside management zones.

(f) Management Area 10—Nonforest (consists of roads, rights-of-ways, and special uses located within other Management Areas): estimated acres will be supplied in the draft EIS.

(g) Management Area 11—Not Appropriate for Timber Production (lands of low productivity, i.e., 20 to 49 cubic feet of tree growth per acre per year; site index for hardwood generally less than 60 and for pine, less than 50): estimated acres will be supplied in the draft EIS.

(h) Management Area 12—Nonproductive (areas of rock outcrops or shallow soils on which tree growth is less than 20 cubic feet per year): estimated acres will be supplied in the draft EIS.

(i) Management Area 13—Unsuitable Lands Based on Other Resource Coordination (lands unsuitable for timber production that are not included in other Management Areas): estimated acres will be supplied in the draft EIS.

(j) Management Area 18—Visually Sensitive Foreground Areas, Roads and Trails (foreground area along sensitivity level 1 and 2 roads, e.g., major highways and major forest roads, and trails): estimated acres will be supplied in the draft EIS.

(3) Identification of lands suitable for timber production: Based upon an analysis of satellite imagery, slope and soils data, the preliminary assignment of lands and waters to four major Management Areas (described above), and estimates of streamside management zones, the interdisciplinary team estimates that approximately 54,000 acres of the Broken Bow unit may be suitable for timber production. Of these lands, at least 32,000 acres consist of loblolly pine plantations. The disposal of 28,093 acres of coastal plain lands (former portions of the Tiak Ranger District) and the addition of approximately 111,580 acres in the mountainous part of McCurtain County has resulted in an estimated net increase of about 25,750 acres of National Forest land suitable for timber production. Further analysis of timber suitability will be included in the draft EIS.

(4) Re-determination of forest-wide allowable sale quantity (ASQ) (if needed): The land base suitable for timber production for the Ouachita National Forest has increased as a result of the land exchange, but the average timber productivity of the acquired lands in Oklahoma is less than that of the former National Forest lands that are now in private ownership. The interdisciplinary team will conduct analyses to determine the net change, if any, in ASQ.

(5) Identification of lands suitable and potentially available for cattle grazing: Most of the acquired lands appear to be suitable for controlled grazing. The capability of these lands for producing forage for grazing animals will be analyzed and reported in the draft EIS.

(6) Determination of the eligibility and suitability of the Glover and Mountain Fork Rivers for possible congressional designation as Wild and Scenic Rivers: The interdisciplinary team has made a preliminary determination that the portion of the Glover River within National Forest boundaries should be recommended for inclusion in the National Wild and Scenic Rivers System; the team will not recommend the portions of the Mountain Fork River within National Forest boundaries for such inclusion at this time.

Glover River: **Segment I**—19.5 stream miles, beginning at the confluence of East and West Forks, T3S, R23E, Sec. 7, and extending south to the Forest proclamation boundary, T5S, R23E, Sec. 9 (about 0.8 mile downstream from the bridge on road 50000). This segment (and possibly lower portions of Cedar and Carter Creeks) is eligible because the stream is free flowing and has outstandingly remarkable scenic, recreational, fish and wildlife, geological and archaeological/historic values. It qualifies for classification as ''scenic'' because it is free of impoundments, has shorelines or watersheds still largely primitive and shorelines largely undeveloped, and has several access points and road crossings. The Forest Service will complete a report to determine if this segment of the Glover River is suitable for inclusion in the NWSR System. **Segment II**—12.5 stream miles, beginning at the southern limit of the Forest proclamation boundary south to the confluence with Little River. Because this segment of the Glover River is in private ownership and outside the National Forest proclamation boundary, the Forest Service will not conduct an eligibility and suitability study. Such a study would be more appropriately conducted by a State agency.

Mountain Fork River: **Segment I**—15.9 stream miles, including that part of the river from the Oklahoma-Arkansas State line, T1S, R27E, Sec. 3, downstream to the Forest proclamation boundary at the Oklahoma Highway 4 bridge, T1S, R25E, Sec. 24. This segment of the Mountain Fork is entirely in private ownership and outside the National Forest proclamation boundary. The Forest Service will not conduct an eligibility or suitability study of this stretch of river. Such a study would be more appropriately conducted by a State agency. **Segment II**—9.1 miles, including that part of the river from the Forest proclamation boundary at the Oklahoma Highway 4 bridge downstream to the upper end of Broken Bow Lake (600-foot elevation level). This segment is eligible for designation under the Wild and Scenic Rivers Act because it is free flowing and has outstandingly remarkable scenic, recreational, fish and wildlife, geological, and archaeological/historical values. It qualifies as ''scenic'' because it is free of impoundments, has shorelines or watersheds still largely primitive and shorelines largely undeveloped, and has several access points and road crossings. Because of limited National Forest ownership in this segment (2.3 miles), it would be more appropriate for a State agency to complete any further studies. **Segment III**—11.1 stream miles, beginning at the Broken Bow dam and extending downstream to the National Forest proclamation boundary at U.S. Highway 70, T6S,

R26E, Sec. 7. Although containing outstandingly remarkable scenic and recreational values, this segment of river is not considered free flowing and, therefore, is not eligible for inclusion in the NWSRS.

Possible Alternatives

The alternatives briefly summarized below have been discussed by the interdisciplinary team; others will be developed in response to public issues.

(1) Increase extent of Management Area 22. Increase Management Area 22 (renewal of the shortleaf pine-bluestem ecosystem) to encompass more acreage, including most of the land tentatively proposed for allocation to Management Areas 14 and 23.

(2) Establish a single Management Area 23 (Broken Bow Lake Management Area) east of Highway 259, divided into 23a (Habitat Management Area for Red-cockaded Woodpecker) and 23b [lower Lake area] instead of 22 and 23). This alternative would be developed to show a more integrated picture of management direction within the Broken Bow Lake/Mountain Fork River area. Standards and guidelines would change little.

(3) Increase the extent of Management Area 14. Allocate more land to the Management Area that yields most of the wood products from the Ouachita National Forest.

Further Information Concerning Public Comments on the Draft EIS

The Forest Service believes, at this early stage, that it is important to give reviewers notice of several court rulings related to public participation in the environmental review process. First, reviewers of draft environmental impact statements must structure their participation in the environmental review of the proposal so that it is meaningful and alerts an agency to the reviewer's position and contentions. Vermont Yankee *Nuclear Power Corp.* v. *NRDC*, 435 U.S. 519, 553 (1978). Also, environmental objections that could be raised at the draft environmental impact statement stage but that are not raised until after completion of the final environmental impact statement may be waived or dismissed by the courts. *City of Angoon* v. *Hodel*, 803 F.2d 1016, 1022 (9th Cir. 1986) and *Wisconsin Heritages, Inc.* v. *Harris*, 490 F. Supp. 1334, 1338 (E.D. Wis. 1980). Because of these court rulings, it is very important that those interested in this proposed action participate by the close of the comment period so that substantive comments and objections are made available to the Forest Service at a time when it can meaningfully consider them and respond to them in the final environmental impact statement.

To assist the Forest Service in identifying and considering issues and concerns on the proposed action, comments on the draft environmental impact statement should be as specific as possible. It is also helpful if comments refer to specific pages or chapters of the draft statement. Comments may also address the adequacy of the draft environmental impact statement or the merits of the alternatives formulated and discussed in the statement. Reviewers may wish to refer to the Council on Environmental Quality Regulations for implementing the procedural provisions of the National Environmental Policy Act at 40 CFR part 1503.3 in addressing these points.

Responsible Official: The Responsible Official is Elizabeth Estill, Regional Forester, Southern Region of the USDA Forest Service, located at 1720 Peachtree Road, NW, Atlanta, GA 30367.

Dated: March 24, 1999.

George Wayne Kelley,

Deputy Regional Forester.

[FR Doc. 99–8010 Filed 3–31–99; 8:45 am]

BILLING CODE 3410–11–M

DEPARTMENT OF AGRICULTURE

Grain Inspection, Packers and Stockyards Administration

Designation for the Central Illinois (IL) Area

AGENCY: Grain Inspection, Packers and Stockyards Administration (GIPSA).

ACTION: Notice.

SUMMARY: GIPSA announces designation of Central Illinois Grain Inspection, Inc. (Central Illinois) to provide official services under the United States Grain Standards Act, as amended (Act).

EFFECTIVE DATE: June 1, 1999.

ADDRESSES: USDA, GIPSA, Janet M. Hart, Chief, Review Branch, Compliance Division, STOP 3604, Room 1647–S, 1400 Independence Avenue, SW, Washington, DC 20250–3604.

FOR FURTHER INFORMATION CONTACT: Janet M. Hart, at 202–720–8525.

SUPPLEMENTARY INFORMATION: This action has been reviewed and determined not to be a rule or regulation as defined in Executive Order 12866 and Departmental Regulation 1512–1; therefore, the Executive Order and Departmental Regulation do not apply to this action.

In the October 1, 1998, **Federal Register** (63 FR 52678), GIPSA asked persons interested in providing official services in the geographic area assigned to Central Illinois to submit an application for designation. Applications were due by October 30, 1998. There were two applicants: Central Illinois and Turner Grain Services, Inc. (Turner). Central Illinois applied for designation to provide official services in the entire area currently assigned to them. Turner, currently operating an unofficial grain inspection business not designated by GIPSA under the authority of the Act, applied for designation to provide official services in a portion of the Central Illinois area. Turner applied for the area bounded on the North by Interstate 74; bounded on the East by Interstate 155; bounded on the South by Illinois Route 136; and bounded on the West by the western Tazewell County line, and the western Peoria County line north to Interstate 74.

The October 1, 1998, **Federal Register** also asked for comments on the services provided by Central Illinois. GIPSA did not receive any comments.

In the December 1, 1998, **Federal Register** (63 FR 66118), GIPSA asked for comments on the applicants for the Central Illinois area. GIPSA received two comments by the deadline: both were from grain companies that said they were familiar with the services provided by Central Illinois and Turner, and both supported designation of both organizations.

GIPSA evaluated all available information regarding the designation criteria in Section 7(f)(1)(A) of the Act and, according to Section 7(f)(1)(B), determined that Central Illinois is better able to provide official services in the geographic area for which they applied.

Effective June 1, 1999, and ending May 31, 2002, Central Illinois is designated to provide official services in the Central Illinois geographic area specified in the October 1, 1998, **Federal Register**.

Interested persons may obtain official services by contacting Central Illinois at 309–827–7121.

Authority: Pub. L. 94–582, 90 Stat. 2867, as amended (7 U.S.C. 71 *et seq.*).

Dated: March 17, 1999.

Neil E. Porter,

Director, Compliance Division.

[FR Doc. 99–7995 Filed 3–31–99; 8:45 am]

BILLING CODE 3410–EN–P

DEPARTMENT OF AGRICULTURE

Grain Inspection, Packers and Stockyards Administration

Opportunity for Designation in the Hastings (NE), Aberdeen (SD), Missouri, Decatur (IL), Grand Forks (ND), McCrea (IA), and South Carolina Areas and Request for Comments on the Hastings, Aberdeen, Missouri, Decatur, Grand Forks, McCrea, and South Carolina Agencies

AGENCY: Grain Inspection, Packers and Stockyards Administration (GIPSA).

ACTION: Notice.

SUMMARY: The designations of the official agencies listed below will end in October, November, and December 1999. GIPSA is asking persons interested in providing official services in the areas served by these agencies to submit an application for designation. GIPSA is also asking for comments on the services provided by these currently designated agencies:

Hastings Grain Inspection, Inc. (Hastings);
Aberdeen Grain Inspection, Inc. (Aberdeen);
Missouri Department of Agriculture (Missouri);
Decatur Grain Inspection, Inc. (Decatur);
Grand Forks Grain Inspection Department, Inc. (Grand Forks);
John R. McCrea Agency, Inc. (McCrea); and
South Carolina Department of Agriculture (South Carolina).

DATES: Applications must be postmarked or sent by telecopier (FAX) on or before April 30, 1999. Comments must be postmarked or sent by telecopier (FAX) on or before May 31, 1999.

ADDRESSES: Applications and comments must be submitted to USDA, GIPSA, Janet M. Hart, Chief, Review Branch, Compliance Division, STOP 3604, Room 1647–S, 1400 Independence Avenue, SW, Washington, DC 20250–3604. Applications and comments may be submitted by FAX on 202–690–2755. If an application is submitted by FAX, GIPSA reserves the right to request an original application. All applications and comments will be made available for public inspection at this address located at 1400 Independence Avenue, SW, during regular business hours.

FOR FURTHER INFORMATION CONTACT: Janet M. Hart, at 202–720–8525.

SUPPLEMENTARY INFORMATION: This Action has been reviewed and determined not to be a rule or regulation as defined in Executive Order 12866 and Departmental Regulation 1512–1; therefore, the Executive Order and Departmental Regulation do not apply to this Action.

Section 7(f)(1) of the United States Grain Standards Act, as amended (Act), authorizes GIPSA's Administrator to designate a qualified applicant to provide official services in a specified area after determining that the applicant is better able than any other applicant to provide such official services.

Section 7(g)(1) of the Act provides that designations of official agencies shall end not later than triennially and may be renewed according to the criteria and procedures prescribed in section 7(f) of the Act.

1. Current Designations Being Announced for Renewal

Official agency	Main office	Designation start	Designation end
Hastings	Hastings, NE	11/1/1996	10/31/1999
Aberdeen	Aberdeen, SD	12/1/1996	11/30/1999
Missouri	Jefferson City, MO	12/1/1996	11/30/1999
Decatur	Decatur, IL	01/1/1997	12/31/1999
Grand Forks	Grand Forks, ND	01/1/1997	12/31/1999
McCrea	Clinton, IA	01/1/1997	12/31/1999
South Carolina	North Charleston, SC	01/1/1997	12/31/1999

a. Hastings

Pursuant to section 7(f)(2) of the Act, the following geographic area, in the State of Nebraska, is assigned to Hastings.

Bounded on the North by the northern Nebraska State line from the western Sioux County line east to the eastern Knox County line;

Bounded on the East by the eastern and southern Knox County lines; the eastern Antelope County line; the northern Madison County line east to U.S. Route 81; U.S. Route 81 south to the southern Madison County line; the southern Madison County line; the eastern Boone, Nance, and Merrick County lines; the Platte River southwest; the eastern Hamilton County line; the northern and eastern Fillmore County lines; the southern Fillmore County line west to U.S. Route 81; U.S. Route 81 south to State Highway 8; State Highway 8 west to the County Road 1 mile west of U.S. Route 81; the County Road south to southern Nebraska State line;

Bounded on the South by the southern Nebraska State line, from the County Road 1 mile west of U.S. Route 81, west to the western Dundy County line; and

Bounded on the West by the western Dundy, Chase, Perkins, and Keith County lines; the southern and western Garden County lines; the southern Morrill County line west to U.S. Route 385; U.S. Route 385 north to the southern Box Butte County line; the southern and western Sioux County lines north to the northern Nebraska State line.

The following grain elevators, located outside of the above contiguous geographic area, are part of this geographic area assignment: Farmers Coop and Big Springs Elevator, both in Big Springs, Deuel County (located inside Kansas Grain Inpsection Service, Inc.'s, area); and Huskers Cooperative Grain Company, Columbus, Platte County (located inside Fremont Grain Inspection Department, Inc.'s, area).

b. Aberdeen

Pursuant to section 7(f)(2) of the Act, the following geographic area, in the States of North Dakota and South Dakota, is assigned to Aberdeen.

Bounded on the North by U.S. Route 12 east to State Route 22; State Route 22 north to the Burlington-Northern (BN) line; the Burlington-Northern (BN) line east to State Route 21; State Route 21 east to State Route 49; State Route 49 south to the North Dakota-South Dakota State line; the North Dakota-South Dakota State line east to U.S. Route 83; U.S. Route 83 north to State Route 13; State Route 13 east and north to McIntosh County; the northern McIntosh County line east to Dickey County; the northern Dickey County line east to U.S. Route 281; U.S. Route 281 south to the North Dakota-South Dakota State line; the North Dakota-South Dakota State line east;

Bounded on the East by the eastern South Dakota State line (the Big Sioux River) to A54B;

Bounded on the South by A54B west to State Route 11; State Route 11 north to State Route 44 (U.S. 18); State Route 44 west to the Missouri River; the Missouri River south-southeast to the South Dakota State line; the southern South Dakota State line west; and

Bounded on the West by the western South Dakota State line north; the western North Dakota State line north to U.S. Route 12.

c. Missouri

Pursuant to section 7(f)(2) of the Act, the following geographic area, the entire State of Missouri, is assigned to Missouri.

d. Decatur

Pursuant to Section 7(f)(2) of the Act, the following geographic area, in the State of Illinois, is assigned to Decatur.

Bounded on the North by the northern and eastern DeWitt County lines; the eastern Macon County line south to Interstate 72; Interstate 72 northeast to the eastern Piatt County line;

Bounded on the East by the eastern Piatt, Moultrie, and Shelby County lines;

Bounded on the South by the southern Shelby County line; a straight line running along the southern Montgomery County line west to State Route 16 to a point approximately 1 mile northeast of Irving; and

Bounded on the West by a straight line from this point northeast to Stonington on State Route 48; a straight line from Stonington northwest to Elkhart on Interstate 55; a straight line from Elkhart northeast to the west side of Beason on State Route 10; State Route 10 east to DeWitt County; the western DeWitt County line.

Decatur's assigned geographic area does not include the following grain elevators inside Decatur's area which have been and will continue to be serviced by the following official agency: Champaign-Danville Grain Inspection Departments, Inc.: Moultrie Grain Association, Cadwell, Moultrie County; Tabor and Company, Weedman Grain Company, and Pacific Grain Company, all in Farmer City, DeWitt County; and Monticello Grain Company, Monticello, Piatt County.

e. Grand Forks

Pursuant to section 7(f)(2) of the Act, the following geographic area, in the State of North Dakota, is assigned to Grand Forks.

Bounded on the North by the North Dakota State line;

Bounded on the East by the North Dakota State line south to State Route 200;

Bounded on the South by State Route 200 west-northwest to the western Traill County line; the western Traill County line; the southern Grand Forks and Nelson County lines; the southern Eddy County line west to U.S. Route 281; U.S. Route 281 north to State Route 15; State Route 15 west to U.S. Route 52; U.S. Route 52 northeast to State Route 3; and

Bounded on the West by State Route 3 north to State Route 60; State Route 60 west-northwest to State Route 5; State Route 5 west to State Route 14; State Route 14 north to the North Dakota State line.

Grand Fork's assigned geographic area does not include the following grain elevators inside Grand Fork's area which have been and will continue to be serviced by the following official agencies:

1. Grain Inspection, Inc.: Farmers Coop Elevator, Fessenden; Farmers Union Elevator, and Manfred Grain, both in Manfred; all in Wells County; and

2. Minot Grain Inspection, Inc.: Harvey Farmers Elevator, Harvey, Wells County.

f. McCrea

Pursuant to section 7(f)(2) of the Act, the following geographic area, in the States of Illinois and Iowa, is assigned to McCrea.

Carroll and Whiteside Counties, Illinois.

Clinton and Jackson Counties, Iowa.

2. Opportunity for Designation

Interested persons, including Hastings, Aberdeen, Missouri, Decatur, Grand Forks, McCrea, and South Carolina, are hereby given the opportunity to apply for designation to provide official services in the geographic areas specified above under the provisions of section 7(f) of the Act and section 800.196(d) of the regulations issued thereunder.

DESIGNATION TERM

Hastings	11/01/1999 to 9/30/2002.
Aberdeen	12/01/1999 to 9/30/2002.
Missouri	12/01/1999 to 9/30/2002.
Decatur	01/01/2000 to 9/30/2002.
Grand Forks	01/01/2000 to 9/30/2002.
McCrea	01/01/2000 to 9/30/2002.
South Carolina	01/01/2000 to 9/30/2002.

Persons wishing to apply for designation should contact the Compliance Division at the address listed above for forms and information.

3. Request for Comments

GIPSA also is publishing this notice to provide interested persons the opportunity to present comments on the Hastings, Aberdeen, Missouri, Decatur, Grand Forks, McCrea, and South Carolina official agencies. Commenters are encouraged to submit pertinent data concerning the Hastings, Aberdeen, Missouri, Decatur, Grand Forks, McCrea, and South Carolina official agencies including information concerning the timeliness, cost, quality, and scope of services provided. All comments must be submitted to the Compliance Division at the above address.

Applications, comments, and other available information will be considered in determining which applicant will be designated.

Authority: Pub. L. 94–582, 90 Stat. 2867, as amended (7 U.S.C. 71 et seq.).

Dated: March 11, 1999.

Neil E. Porter,

Director, Compliance Division.

[FR Doc. 99–7996 Filed 3–31–99; 8:45 am]

BILLING CODE 3410–EN–P

COMMISSION ON CIVIL RIGHTS

Agenda and Notice of Public Meeting of the New York State Advisory Committee

Notice is hereby given, pursuant to the provisions of the rules and regulations of the U.S. Commission on Civil Rights, that a meeting of the New York State Advisory Committee to the Commission will convene at 1:30 p.m. and adjourn at 5:30 p.m. on April 23, 1999, at the United Way of New York, 2nd Floor Conference Room 2A, Two Park Avenue, New York, New York 10016. The Committee will plan for the release of its report, Equal Housing Opportunities in New York: An Evaluation of Section 8 Housing Programs in Buffalo, Rochester, and Syracuse. The Committee will also discuss plans for a new project.

Persons desiring additional information, or planning a presentation to the Committee, should contact Ki-Taek Chun, Director of the Eastern Regional Office, 202–376–7533 (TDD 202–376–8116). Hearing-impaired persons who will attend the meeting and require the services of a sign language interpreter should contact the Regional Office at least ten (10) working days before the scheduled date of the meeting.

The meeting will be conducted pursuant to the provisions of the rules and regulations of the Commission.

Dated at Washington, DC, March 24, 1999.

Carol-Lee Hurley,

Chief, Regional Programs Coordination Unit.

[FR Doc. 99–7945 Filed 3–31–99; 8:45 am]

BILLING CODE 6335–01–M

COMMISSION ON CIVIL RIGHTS

Agenda and Notice of Public Meeting of the Pennsylvania Advisory Committee

Notice is hereby given, pursuant to the provisions of the rules and regulations of the U.S. Commission on Civil Rights, that a meeting of the Pennsylvania Advisory Committee to the Commission will convene from 1:30 p.m. to 5:00 p.m. on April 23, 1999, at the Philadelphia Convention Center, Administrative Level Board Room, 12th and Arch Streets, Philadelphia, Pennsylvania 19107. The Committee will discuss the January 14, 1999 forum presentations, review staff's progress on the draft report of the event, and receive presentations from those organization representatives unable to attend the forum.

Persons desiring additional information, or planning a presentation to the Committee, should contract Ki-Taek Chun, Director of the Eastern Regional Office, 202–376–7533 (TDD 202–376–8116). Hearing-impaired persons who will attend the meeting and require the services of a sign language interpreter should contact the Regional Office at least ten (10) working days before the scheduled date of the meeting.

The meeting will be conducted pursuant to the provisions of the rules and regulations of the Commission.

Dated at Washington, DC, March 23, 1999.

Carol-Lee Hurley,

Chief, Regional Programs Coordination Unit.

[FR Doc. 99–7946 Filed 3–31–99; 8:45 am]

BILLING CODE 6335–01–M

COMMISSION ON CIVIL RIGHTS

Agenda and Notice of Public Meeting of the Virginia Advisory Committee

Notice is hereby given, pursuant to the provisions of the rules and regulations of the U.S. Commission on Civil Rights, that a meeting of the Virginia Advisory Committee to the Commission will convene at 10:00 a.m. and adjourn at 3:00 p.m. on April 23, 1999, at the National Spa and Pool Institute, 2111 Eisenhower Avenue, Alexandria, Virginia 22314. The Committee will review its draft report on the treatment of African American males in Virginia's justice system, conduct an informational briefing on civil rights developments, and discuss new project proposals.

Persons desiring additional information, or planning a presentation to the Committee, should contact Ki-Taek Chun, Director of the Eastern Regional office, 202–376–7533 (TDD 202–376–8116). Hearing-impaired persons who will attend the meeting and require the services of a sign language interpreter should contact the Regional Office at least ten (10) working days before the scheduled date of the meeting.

The meeting will be conducted pursuant to the provisions of the rules and regulations of the Commission.

Dated at Washington, DC, March 23, 1999.

Carol-Lee Hurley,

Chief, Regional Programs Coordination Unit.

[FR Doc. 99–7947 Filed 3–31–99; 8:45 am]

BILLING CODE 6335–01–M

COMMISSION ON CIVIL RIGHTS

Agenda and Notice of Public Meeting of the Wyoming Advisory Committee

Notice is hereby given, pursuant to the provisions of the rules and regulations of the U.S. Commission on Civil Rights, that a meeting of the Wyoming Advisory Committee to the Commission will convene at 5:30 p.m. and recess at 7:30 p.m. on Wednesday, May 5, 1999. The purpose of the meeting is to hold orientation for new members and a briefing on format and presenters for the community forum. The Committee will reconvene at 9:00 a.m. and adjourn at 9:00 p.m. on Thursday, May 6, 1999, to hold a community forum on education issues affecting minority students in the Wyoming public secondary schools with representatives of the U.S. Department of Education, Wyoming State government and school district officials, and community representatives and citizens. The meeting for both days will be located at the Radisson, 800 N. Poplar, Casper, Wyoming 86201.

Persons desiring additional information, or planning a presentation to the Committee, should contact John Dulles, Director of the Rocky Mountain Regional Office, 303–866–1040 (TDD 303–866–1049). Hearing-impaired persons who will attend the meeting and require the services of a sign language interpreter should contact the Regional Office at least ten (10) working days before the scheduled date of the meeting.

The meeting will be conducted pursuant to the provisions of the rules and regulations of the Commission.

Dated at Washington, DC, March 23, 1999.

Carol-Lee Hurley,

Chief, Regional Programs Coordination Unit.

[FR Doc. 99–7948 Filed 3–31–99; 8:45 am]

BILLING CODE 6335–01–M

DEPARTMENT OF COMMERCE

Foreign-Trade Zones Board

[Order No. 1025]

Grant of Authority for Subzone Status, ESCO Company Limited Partnership Plant, (Colorformer Chemicals), Muskegon, Michigan

Pursuant to its authority under the Foreign-Trade Zones Act of June 18, 1934, as amended (19 U.S.C. 81a-81u), the Foreign-Trade Zones Board (the Board) adopts the following Order:

Whereas, the Foreign-Trade Zones Act provides for ''* * * the establishment * * * of foreign-trade zones in ports of entry of the United States, to expedite and encourage foreign commerce, and for other purposes,'' and authorizes the Foreign-Trade Zones Board to grant to qualified corporations the privilege of establishing foreign-trade zones in or adjacent to U.S. Customs ports of entry;

Whereas, the Board's regulations (15 CFR part 400) provide for the establishment of special-purpose subzones when existing zone facilities cannot serve the specific use involved;

Whereas, the KOM Foreign Trade Zone Authority, grantee of Foreign-Trade Zone 189, has made application to the Board for authority to establish special-purpose subzone status at the colorformer chemical manufacturing facility of ESCO Company Limited Partnership, located in Muskegon, Michigan (FTZ Docket 57–96, filed July 8, 1996 amended on July 28, 1997; amendment withdrawn on March 13, 1997);

Whereas, notice inviting public comment was given in the **Federal Register** (61 FR 38137, July 23, 1996; 61 FR 59401, November 22, 1996 and 62 FR 11813, March 13, 1997); and,

Whereas, the Board adopts the findings and recommendations of the examiner's report, and finds that the requirements of the FTZ Act and the Board's regulations would be satisfied and that approval of the application would be in the public interest if subject to restriction;

Now, therefore, the Board hereby grants authority for subzone status at the colorformer chemical manufacturing

facility of ESCO Company Limited Partnership, located in Muskegon, Michigan (Subzone 189B), at the location described in the application, and subject to the FTZ Act and the Board's regulations, including § 400.28, and further subject to a restriction requiring that any foreign status merchandise admitted to the subzone and manufactured or processed under zone procedures must be exported.

Signed at Washington, DC, this 23rd day of March 1999.

Robert S. LaRussa,

Assistant Secretary of Commerce for Import Administration, Alternate Chairman, Foreign-Trade Zones Board.

Attest: Dennis Puccinelli, Acting Executive Secretary.

[FR Doc. 99–8078 Filed 3–31–99; 8:45 am]

BILLING CODE 3510–DS–P

DEPARTMENT OF COMMERCE

International Trade Administration

AGENCY: Import Administration, International Trade Administration, Department of Commerce.

ACTION: Notice of Initiation of Five-Year (''Sunset'') Reviews.

SUMMARY: In accordance with section 751(c) of the Tariff Act of 1930, as amended (''the Act''), the Department of Commerce (''the Department'') is automatically initiating five-year (''sunset'') reviews of the antidumping and countervailing duty orders or suspended investigations listed below. The International Trade Commission (''the Commission'') is publishing concurrently with this notice its notices of *Institution of Five-Year Reviews* covering these same orders.

FOR FURTHER INFORMATION CONTACT: Melissa G. Skinner, Scott E. Smith, or Martha V. Douthit, Office of Policy, Import Administration, International Trade Administration, U.S. Department of Commerce, at (202) 482–1560, (202) 482–6397 or (202) 482–3207, respectively, or Vera Libeau, Office of Investigations, U.S. International Trade Commission, at (202) 205–3176.

SUPPLEMENTARY INFORMATION:

Initiation of Reviews

In accordance with 19 CFR 351.218 (*see Procedures for Conducting Five-year (''Sunset'') Reviews of Antidumping and Countervailing Duty Orders*, 63 FR 13516 (March 20, 1998)), we are initiating sunset reviews of the following antidumping and countervailing duty orders or suspended investigations:

DOC Case No.	ITC Case No.	Country	Product
A–122–701	A–374	Canada	Potassium Chloride (Potash).
A–588–054	AA–143	Japan	Tapered Roller Bearings, 4 Inches and Under.
A–570–601	A–344	China, PR	Tapered Roller Bearings.
A–437–601	A–341	Hungary	Tapered Roller Bearings.
A–485–602	A–345	Romania	Tapered Roller Bearings.
A–588–604	A–343	Japan	Tapered Roller Bearings, 4 Inches and Over.
A–427–801	A–392	France	Cylindrical Roller Bearings.
A–427–801	A–392	France	Ball Bearings.
A–427–801	A–392	France	Spherical Plain Bearings.
A–428–801	A–391	Germany	Spherical Plain Bearings.
A–428–801	A–391	Germany	Cylindrical Roller Bearings.
A–428–801	A–391	Germany	Ball Bearings.
A–475–801	A–393	Italy	Ball Bearings.
A–475–801	A–393	Italy	Cylindrical Roller Bearings.
A–588–804	A–394	Japan	Cylindrical Roller Bearings.
A–588–804	A–394	Japan	Spherical Plain Bearings.
A–588–804	A–394	Japan	Ball Bearings.
A–485–801	A–395	Romania	Ball Bearings.
A–559–801	A–396	Singapore	Ball Bearings.
A–401–801	A–397	Sweden	Ball Bearings.
A–401–801	A–397	Sweden	Cylindrical Roller Bearings.
A–412–801	A–399	United Kingdom	Cylindrical Roller Bearings.
A–412–801	A–399	United Kingdom	Ball Bearings.
A–588–703	A–377	Japan	Forklift Trucks.
A–588–706	A–384	Japan	Nitrile Rubber.

Statute and Regulations

Pursuant to sections 751(c) and 752 of the Act, an antidumping (''AD'') or countervailing duty (''CVD'') order will be revoked, or the suspended investigation will be terminated, unless revocation or termination would be likely to lead to continuation or recurrence of (1) dumping or a countervailable subsidy, and (2) material injury to the domestic industry.

The Department's procedures for the conduct of sunset reviews are set forth in *Procedures for Conducting Five-year (''Sunset'') Reviews of Antidumping and Countervailing Duty Orders*, 63 FR 13516 (March 20, 1998) (''*Sunset Regulations*''). Guidance on methodological or analytical issues relevant to the Department's conduct of sunset reviews is set forth in the Department's Policy Bulletin 98:3—*Policies Regarding the Conduct of Five-year (''Sunset'') Reviews of Antidumping and Countervailing Duty Orders; Policy Bulletin*, 63 FR 18871 (April 16, 1998) (''*Sunset Policy Bulletin*'').

Filing Information

As a courtesy, we are making information related to sunset proceedings, including copies of the *Sunset Regulations* and *Sunset Policy Bulletin*, the Department's schedule of sunset reviews, case history information (*e.g.*, previous margins, duty absorption determinations, scope language, import volumes), and service lists, available to the public on the Department's sunset internet website at the following address: ''http://www.ita.doc.gov/import__admin/records/sunset/''.

All submissions in the sunset review must be filed in accordance with the Department's regulations regarding format, translation, service, and certification of documents. These rules

can be found at 19 CFR 351.303 (1998). Also, we suggest that parties check the Department's sunset website for any updates to the service list before filing any submissions. We ask that parties notify the Department in writing of any additions or corrections to the list. We also would appreciate written notification if you no longer represent a party on the service list.

Because deadlines in a sunset review are, in many instances, very short, we urge interested parties to apply for access to proprietary information under administrative protective order (''APO'') immediately following publication in the **Federal Register** of the notice of initiation of the sunset review. The Department's regulations on submission of proprietary information and eligibility to receive access to business proprietary information under APO can be found at 19 CFR 351.304–306 (*see Antidumping and Countervailing Duty Proceedings: Administrative Protective Order Procedures; Procedures for Imposing Sanctions for Violation of a Protective Order*, 63 FR 24391 (May 4, 1998)).

Information Required From Interested Parties

Domestic interested parties (defined in 19 CFR 351.102 (1998)) wishing to participate in the sunset review must respond not later than 15 days after the date of publication in the **Federal Register** of the notice of initiation by filing a notice of intent to participate. The required contents of the notice of intent to participate are set forth in the *Sunset Regulations* at 19 CFR 351.218(d)(1)(ii). We note that the Department considers each of the orders listed above as separate and distinct orders and, therefore, requires order-specific submissions. Because the case numbers are the same for many of the orders covering differing classes or kinds of antifriction bearings, we request that all submissions clearly identify the order for which the submission is being made by country and product name as listed above. In accordance with the *Sunset Regulations*, if we do not receive a notice of intent to participate from at least one domestic interested party by the 15-day deadline, the Department will automatically revoke the order without further review.

If we receive an order-specific notice of intent to participate from a domestic interested party, the *Sunset Regulations* provide that *all parties* wishing to participate in the sunset review must file substantive responses not later than 30 days after the date of publication in the **Federal Register** of the notice of initiation. The required contents of a substantive response, on an order-specific basis, are set forth in the *Sunset Regulations* at 19 CFR 351.218(d)(3). Note that certain information requirements differ for foreign and domestic parties. Also, note that the Department's information requirements are distinct from the International Trade Commission's information requirements. Please consult the *Sunset Regulations* for information regarding the Department's conduct of sunset reviews.[1] Please consult the Department's regulations at 19 CFR part 351 (1998) for definitions of terms and for other general information concerning antidumping and countervailing duty proceedings at the Department.

This notice of initiation is being published in accordance with section 751(c) of the Act and 19 CFR 351.218(c).

Dated: March 26, 1999.

Robert S. LaRussa,

Assistant Secretary for Import Administration.

[FR Doc. 99–8070 Filed 3–31–99; 8:45 am]

BILLING CODE 3510–DS–P

DEPARTMENT OF COMMERCE

International Trade Administration

January 1999 Sunset Reviews: Final Results and Revocations

AGENCY: Import Administration, International Trade Administration, Department of Commerce.

ACTION: Notice of Final Results of Sunset Reviews and Revocation of Antidumping Duty Orders: Brazing Copper Wire & Rod from New Zealand (A–614–502), Brazing Copper Wire & Rod from South Africa (A–791–502), and Cellular Mobile Phones from Japan (A–588–405).

SUMMARY: On January 4, 1999, the Department of Commerce (''the Department'') initiated sunset reviews of the antidumping duty orders on brazing copper wire and rod from New Zealand, brazing copper wire and rod from South Africa, and cellular mobile phones from Japan. Because no domestic party responded to the sunset review notice of initiation by the applicable deadline, the Department is revoking these orders.

EFFECTIVE DATE: January 1, 2000.

FOR FURTHER INFORMATION CONTACT: Darla D. Brown or Melissa G. Skinner, Office of Policy, Import Administration, International Trade Administration, U.S. Department of Commerce, 14th Street and Constitution Avenue, NW, Washington, DC 20230; telephone: (202) 482–3207 or (202) 482–1560, respectively.

SUPPLEMENTARY INFORMATION:

Background

The Department issued antidumping duty orders on brazing copper wire and rod from New Zealand (50 FR 49740, December 4, 1985), brazing copper wire and rod from South Africa (51 FR 3640, January 29, 1986), and cellular mobile phones from Japan (50 FR 51724, December 19, 1985). Pursuant to section 751(c) of the Tariff Act of 1930, as amended (''the Act''), the Department initiated sunset reviews of these orders by publishing notice of the initiation in the **Federal Register** (64 FR 364, January 4, 1999). In addition, as a courtesy to interested parties, the Department sent letters, via certified and registered mail, to each party listed on the Department's most current service list for these proceedings to inform them of the automatic initiation of a sunset review on these orders.

No domestic interested parties in the sunset reviews of these orders responded to the notice of initiation by the January 19, 1999, deadline (*see* section 351.218(d)(1)(i) of *Procedures for Conducting Five-year (''Sunset'') Reviews of Antidumping and Countervailing Duty Orders*, 63 FR 13520 (March 20, 1998) (''*Sunset Regulations*'')).

Determination To Revoke

Pursuant to section 751(c)(3)(A) of the Act and section 351.218(d)(1)(iii)(B)(*3*) of the *Sunset Regulations*, if no interested party responds to the notice of initiation, the Department shall issue a final determination, within 90 days after the initiation of the review, revoking the finding or order or terminating the suspended investigation. Because no domestic interested party responded to the notice of initiation by the applicable deadline, January 19, 1999, we are revoking these antidumping duty orders.

Effective Date of Revocation and Termination

Pursuant to section 751(c)(6)(A)(iv) of the Act, the Department will instruct the United States Customs Service to terminate the suspension of liquidation of the merchandise subject to these orders entered, or withdrawn from warehouse, on or after January 1, 2000.

---

[1] A number of parties commented that these interim-final regulations provided insufficient time for rebuttals to substantive responses to a notice of initiation (*Sunset Regulations*, 19 CFR 351.218(d)(4)). As provided in 19 CFR 351.302(b) (1998), the Department will consider individual requests for extension of that five-day deadline based upon a showing of good cause.

Entries of subject merchandise prior to the effective date of revocation will continue to be subject to suspension of liquidation and antidumping duty deposit requirements. The Department will complete any pending administrative reviews of these orders and will conduct administrative reviews of all entries prior to the effective date of revocation in response to appropriately filed requests for review.

Dated: March 26, 1999.

Robert S. LaRussa,

Assistant Secretary for Import Administration.

[FR Doc. 99–8075 Filed 3–31–99; 8:45 am]

BILLING CODE 3510–DS–P

DEPARTMENT OF COMMERCE

International Trade Administration

[A–588–054]

Tapered Roller Bearings, Four Inches or Less in Outside Diameter, and Components Thereof, From Japan: Final Court Decisions and Amended Final Results of Antidumping Duty Administrative Reviews

AGENCY: Import Administration, International Trade Administration, Department of Commerce.

ACTION: Notice of Final Court Decisions and Amended Final Results of Antidumping Duty Administrative Reviews.

SUMMARY: On December 16, 1991, the Department of Commerce (the Department) published the final results of its administrative review of the antidumping finding on tapered roller bearings (TRBs), finished and unfinished, and parts thereof, from Japan during the period August 1, 1988 through July 31, 1989. *See Tapered Roller Bearings, Four Inches or Less in Outside Diameter, and Certain Components Thereof, from Japan; Final Results of Antidumping Duty Administrative Review* 56 FR 65228. Subsequent to our publication of these final results, parties to the proceeding challenged certain aspects of our final results determinations before the Court of International Trade (CIT) (the Court) and, in certain instances, before the United States Court of Appeals for the Federal Circuit (CAFC).

The Court recently affirmed final remand results with respect to the 1988–89 final results. As there are now final and conclusive court decisions with respect to litigation for these final results, where applicable, we are amending our final results of review and will subsequently instruct customs to liquidate entries subject to these reviews.

EFFECTIVE DATE: April 1, 1999.

FOR FURTHER INFORMATION CONTACT: Ilissa Kabak or John Kugelman, Import Administration, International Trade Administration, U.S. Department of Commerce, 14th Street and Constitution Avenue, NW., Washington, DC 20230; telephone (202) 482–1395 or (202) 482–0649, respectively.

SUPPLEMENTARY INFORMATION:

Background

Below is a summary of the litigation for the 1998–1989 final results for which the Court has issued final and conclusive decisions. It is important to note that, due to the fact that litigation for each TRBs final results was unconsolidated, the Court issued two or more orders throughout the course of litigation which required us to recalculate a respondent's final results margin several times. To ensure the accurate calculation of amended final results, any recalculation we performed for a given respondent pursuant to a specific order reflected all recalculations we performed for that respondent pursuant to earlier orders. As a result, the last Court order requiring a recalculation of a respondent's margin reflects the final amended margin for the respondent, provided that final and conclusive decisions have been made by the Court with respect to litigation which affected the respondent's final results.

On December 16, 1991, we published in the **Federal Register** our notice of the final results of administrative reviews for the 1988–89 period of review (POR). This notice covered the administrative reviews for (1) Koyo Seiko Co., Ltd. (Koyo), (2) NSK Ltd. (INSK), (3) Isuzu Motors, Ltd., (4) Toyota Motors Corporation, and (5) Nachi-Fujikoshi Corporation. Subsequent to the publication of these final results, Koyo, NSK, and The Timken Company (Timken), the petitioners in this case, challenged certain issues before the CIT (Court Nos. 92–01–00047, 92–01–00028, and 92–01–00031, respectively). The CIT has issued final and conclusive decisions with respect to each of these proceedings.

The decisions issued by the Court with respect to the Department's final results for Koyo were:

- *Koyo v. U.S.,* Slip Op. 93–87 (June 1, 1993) (The CIT ruled in favor of the Department on all issues and dismissed the case).
- *Timken v. U.S.,* Slip Op,. 94–107 (July 1, 1994) (The CIT ordered the Department to recalculate the foreign market value without a circumstance-of-sale adjustment and reconsider its treatment of commissions and home market pre-sale freight expenses where foreign market value was calculated using purchase price).
- *Timken v. U.S.,* Slip Op. 96–126 (August 7, 1996) (On December 28, 1994, the CIT granted a stay in the Timken proceedings pending a decision by the CAFC with respect to the Japanese value added tax (VAT) issue in *Koyo v. U.S.,* CAFC Nos. 94–1097, –1044. Based on a motion by plaintiff (Timken), in Slip Op. 96–126 the CIT lifted the stay in these proceedings and remanded the case to the Department to apply the tax-neutral VAT adjustment methodology approved by the CAFC in *Koyo v. U.S.,* 63 F.3d 1572 (Fed. Cir. 1995). The CIT affirmed these results and dismissed the 92–01–00031 litigation in Slip Op. 98–79 on June 17, 1998).

The decisions issued by the Court with respect to the Department's final results for NSK were:

- *NSK v. U.S.,* Slip OP. 93–211 (November 5, 1993) (The CIT ruled in favor of the Department on all issues and dismissed the case.
- *Timken v. U.S.,* Slip Op,. 94–107 (July 1, 1994) (The CIT ordered the Department to recalculate the foreign market value without a circumstance-of-sale adjustment and reconsider its treatment of commissions and home market pre-sale freight expenses where foreign market value was calculated using purchase price).
- *Timken v. U.S.,* Slip Op. 96–126 (August 7, 1996) (On December 28, 1994, the CIT granted a stay in the Timken proceedings pending a decision by the CAFC with respect to the Japanese value added tax (VAT) issue in *Koyo v. U.S.,* CAFC Nos. 94–1097, –1044. Based on a motion by plaintiff (Timken), in Slip Op. 96–126 the CIT lifted the stay in these proceedings and remanded the case to the Department to apply the tax-neutral VAT adjustment methodology approved by the CAFC in *Koyo v. U.S.,* 63 F.3d 1572 (Fed. Cir. 1995). The CIT affirmed these results and dismissed the 92–01–00031 litigation in Slip Op. 98–79 on June 17, 1998).

Status

All Other Firms: No firms except Koyo and NSK pursued litigation and the existing litigation had no impact on their final results. Because the Department has not yet issued instructions to Customs to liquidate entries made by these firms during the applicable period, where appropriate, we will issue instructions to Customs to liquidate entries of merchandise subject to the antidumping funding made by these firms pursuant to our December 16, 1991, 1998–89 final results.

Koyo: As there are now final and conclusive court decisions with respect to both the 92–01–00031 (Timken) and 92–01–00047 (Koyo) litigation, we are amending our final results of review for Koyo based on the last court order

which required a recalculation of Koyo's rate (*Timken v. U.S.*, Sip Op. 96–126). The amended final results margin for Koyo is 16.09%. We will issue instructions to Customs to liquidate entries of subject merchandise made by Koyo during this period pursuant to these amended final results.

NSK: As there are now final and conclusive court decisions with respect to both the 92–01–00031 (Timken) and 92–01–00028 (NSK) litigation, we are amending our final results of review for NSK based on the last court order which required a recalculation of NSK's rate (*Timken v. U.S.*, Slip Op. 96–126). The amended final results margin for NSK is 6.01%. We will issue instructions to Customs to liquidate entries of subject merchandise made by NSK during this period pursuant to these amended final results.

Amendment to Final Determinations

Pursuant to 19 U.S.C. 1516a(e), we are now amending the final results of the 1988–89 administrative review of the antidumping finding on TRBs from Japan. The weighted-average margins are:

Manufacturer/exporter	Margin (percent)
Koyo Seiko Company, Ltd	[1] 16.09
NSK Ltd	[1] 6.01
Isuzu Motors, Ltd	[2] 15.89
Toyota Motors Corporation	[2] 15.89
Nachi-Fujikoshi Corporation	[3] 18.07

[1] Pursuant to these amended final results.
[2] BIA rate-highest rate for any other reviewed firm.
[3] No shipments, margin from last review in which there were shipments.

The above rates will become the antidumping duty deposit rates for those firms that have not had a deposit rate established for them in subsequent reviews.

Accordingly, the Department will determine and Customs will assess appropriate antidumping duties on entries of the subject merchandise made by firms covered by the review of the period listed above. Individual differences between United States price and foreign market value may vary from the percentages listed above. The Department will issue appraisement instructions directly to Customs.

Dated: March 18, 1999.

Robert S. LaRussa,

Assistant Secretary for Import Administration.

[FR Doc. 99–8039 Filed 3–31–99; 8:45 am]

BILLING CODE 3510–DS–M

DEPARTMENT OF COMMERCE

International Trade Administration

Quarterly Update to Annual Listing of Foreign Government Subsidies on Articles of Cheese Subject to an In-Quota Rate of Duty

AGENCY: Import Administration, International Trade Administration, Department of Commerce.

ACTION: Publication of Quarterly Update to Annual Listing of Foreign Government Subsidies on Articles of Cheese Subject to an In-Quota Rate of Duty.

SUMMARY: The Department of Commerce, in consultation with the Secretary of Agriculture, has prepared its quarterly update to the annual list of foreign government subsidies on articles of cheese subject to an in-quota rate of duty during the period October 1, 1998 through December 31, 1998. We are publishing the current listing of those subsidies that we have determined exist.

EFFECTIVE DATE: April 1, 1999.

FOR FURTHER INFORMATION CONTACT: Russell Morris or Tipten Troidl, Office of AD/CVD Enforcement VI, Import Administration, International Trade Administration, U.S. Department of Commerce, 14th Street and Constitution Ave., NW, Washington, DC 20230, telephone: (202) 482–2786.

SUPPLEMENTARY INFORMATION: Section 702(a) of the Trade Agreements Act of 1979 (as amended) (the Act) requires the Department of Commerce (the Department) to determine, in consultation with the Secretary of Agriculture, whether any foreign government is providing a subsidy with respect to any article of cheese subject to an in-quota rate of duty, as defined in section 702(g)(b)(4) of the Act, and to publish an annual list and quarterly updates of the type and amount of those subsidies. We hereby provide the Department's quarterly update of subsidies on cheeses that were imported during the period October 1, 1998 through December 31, 1998.

The Department has developed, in consultation with the Secretary of Agriculture, information on subsidies (as defined in section 702 (g)(b)(2) of the Act) being provided either directly or indirectly by foreign governments on articles of cheese subject to an in-quota rate of duty. The appendix to this notice lists the country, the subsidy program or programs, and the gross and net amounts of each subsidy for which information is currently available.

The Department will incorporate additional programs which are found to constitute subsidies, and additional information on the subsidy programs listed, as the information is developed.

The Department encourages any person having information on foreign government subsidy programs which benefit articles of cheese subject to an in-quota rate of duty to submit such information in writing to the Assistant Secretary for Import Administration, U.S. Department of Commerce, 14th Street and Constitution Avenue, NW, Washington, DC 20230.

This determination and notice are in accordance with section 702(a) of the Act.

Dated: March 26, 1999.

Robert S. LaRussa,

Assistant Secretary for Import Administration.

APPENDIX—SUBSIDY PROGRAMS ON CHEESE SUBJECT TO AN IN-QUOTA RATE OF DUTY

Country	Program(s)	Gross [1] Subsidy	Net [2] Subsidy
Austria	European Union Restitution Payments	$0.25	$0.25
Belgium	EU Restitution Payments	0.10	0.10
Canada	Export Assistance on Certain Types of Cheese	0.22	0.22
Denmark	EU Restitution Payments	0.18	0.18
Finland	EU Restitution Payments	0.28	0.28
France	EU Restitution Payments	0.20	0.20
Germany	EU Restitution Payments	0.20	0.20
Greece	EU Restitution Payments	0.00	0.00
Ireland	EU Restitution Payments	0.18	0.18
Italy	EU Restitution Payments	0.03	0.03
Luxembourg	EU Restitution Payments	0.10	0.10
Netherlands	EU Restitution Payments	0.10	0.10

APPENDIX—SUBSIDY PROGRAMS ON CHEESE SUBJECT TO AN IN-QUOTA RATE OF DUTY—Continued

Country	Program(s)	Gross [1] Subsidy	Net [2] Subsidy
Norway	Indirect (Milk) Subsidy	0.33	0.33
	Consumer Subsidy	0.15	0.15
Total		0.48	0.48
Portugal	EU Restitution Payments	0.14	0.14
Spain	EU Restitution Payments	0.14	0.14
Switzerland	Deficiency Payments	0.24	0.24
U.K.	EU Restitution Payments	0.14	0.14

[1] Defined in 19 U.S.C. 1677(5).
[2] Defined in 19 U.S.C. 1677(6).

[FR Doc. 99–8077 Filed 3–31–99; 8:45 am]

BILLING CODE 3510–DS–P

DEPARTMENT OF COMMERCE

International Trade Administration

December 1998 Sunset Reviews: Corrected Final Results and Revocations

AGENCY: Import Administration, International Trade Administration, Department of Commerce.

ACTION: Notice of Correction to Final Results and Revocations of December 1998 Sunset Reviews: Agricultural Tillage Tools from Brazil (C–351–406).

SUMMARY: On March 8, 1999, the Department of Commerce (''the Department'') published in the **Federal Register** (64 FR 10993) the final results of the December 1998 sunset review of the countervailing duty order on tillage tools from Brazil and its revocation. Subsequent to the publication of the final results, we identified an inadvertent error in the action line of the notice. Specifically, the action was identified as concerning agricultural tillage tools from Argentina, not Brazil. Therefore, we are correcting this inadvertent error. As noted in the body of the original notice, the review addresses the countervailing duty order on agricultural tillage tools from Brazil.

FOR FURTHER INFORMATION CONTACT: Scott E. Smith or Melissa G. Skinner, Office of Policy for Import Administration, International Trade Administration, U.S. Department of Commerce, 14th St. & Constitution Ave., NW, Washington, DC 20230: telephone (202) 482–6397 or (202) 482–1560, respectively.

This amendment is issued and published in accordance with sections 751(h) and 777(i) of the Act.

Dated: March 26, 1999.

Robert S. LaRussa,

Assistant Secretary for Import Administration.

[FR Doc. 99–8076 Filed 3–31–99; 8:45 am]

BILLING CODE 3510–DS–P

CORPORATION FOR NATIONAL AND COMMUNITY SERVICE

Proposed Information Collection; Comment Request

AGENCY: Corporation for National and Community Service.

ACTION: Notice and request for comments.

SUMMARY: The Corporation for National and Community Service (hereinafter the ''Corporation''), as part of its continuing effort to reduce paperwork and respondent burden, conducts a pre-clearance consultation program to provide the general public and Federal agencies with an opportunity to comment on proposed and/or continuing collections of information in accordance with the Paperwork Reduction Act of 1995 (PRA95) (44 U.S.C. 3506(c)(2)(A)). This program helps to ensure that requested data can be provided in the desired format, reporting burden (time and financial resources) is minimized, collection instruments are clearly understood, and the impact of collection requirement on respondents can be properly assessed. Currently, the Corporation is soliciting comments concerning its request for approval of a new information collection from organizations that conduct literacy and tutoring activities under the sponsorship of Corporation grants. This information will be used by the Corporation to evaluate the nature and effectiveness of the programs. Copies of the proposed information collection request may be obtained by contacting the office listed below in the **ADDRESSES** section of this notice.

The Corporation is particularly interested in comments which:

- Evaluate whether the proposed collection of information is necessary for the proper performance of the functions of the Corporation, including whether the information will have practical utility;
- Evaluate the accuracy of the agency's estimate of the burden of the proposed collection of information, including the validity of the methodology and assumptions used;
- Propose ways to enhance the quality, utility and clarity of the information to be collected; and
- Propose ways to minimize the burden of the collection of information on those who are to respond, including through the use of appropriate automated, electronic, mechanical, or other technological collection techniques or other forms of information technology, e.g., permitting electronic submissions of responses.

DATES: Written comments must be submitted to the office listed in the **ADDRESSES** section by June 1, 1999.

ADDRESSES: Send comments to the Corporation for National and Community Service, Attn: Susan Labin, Office of Evaluation, 1201 New York Avenue, N.W., 9th floor, Washington, D.C. 20525.

FOR FURTHER INFORMATION CONTACT: Susan Labin, (202) 606–5000, ext. 160.

SUPPLEMENTARY INFORMATION:

Background

One of the six major legislative ''findings'' of the Corporation for National Service is that ''Americans * * * become better citizens through service to the United States.'' Of the eight legislative purposes of the agency, educational development and civic responsibility are benefits that are intended to accrue to those who serve (42 U.S.C. 12501.(a)(b)). These purposes are reflected in the Corporation's vision statement which is expanding the sense of community and creating an active

citizenship where Americans feel greater responsibility toward others. Similarly the mission statement of the agency speaks directly to the benefits of service:

> ''In doing so [engaging in service], the Corporation will foster civic responsibility, strengthen the ties that bind us together as a people, and provide educational opportunity for those who make a substantial commitment to service.''

Thus, a central purpose of the agency and its programs is to foster citizenship and development for those who serve. This study will look at the effects of service on the members who serve in the three Americorps programs: State/National, Volunteers in Service to America (VISTA), and National Civilian Community Corps (NCCC). Approximately 40,000 citizens serve in Americorps each year.

Current Action

The objectives of this study are to: describe the outcomes that are associated with serving and document changes in those outcomes over time; identify factors explaining variation in outcomes at different stages of time; and, to the degree possible, specify the causal influences of national service on its members. Outcome domains will include attitudes and behaviors for civic engagement, education, employment, and life skills.

To meet these objectives, the study will select a nationally representative sample of incoming AmeriCorps members from a sufficient number of programs to generalize overall population. It will collect data from a self-report survey measuring the above life outcomes for AmeriCorps members, as well as individual background characteristics. This will require baseline data at entry to the program as well as repeated measurements over a several years time period. In order to address the issue of causality, or the direct influence that service had on the outcomes, the study will include a comparison group for each of the three programs. The program's populations and service activities are very diverse and require separate sampling plans and separate comparison groups. In addition, the study will incorporate a smaller retrospective study of former AmeriCorps members carried out in combination with the main longitudinal study. In this way, information from previous members on outcomes over the past several years will be available sooner than the larger longitudinal study of new members.

The Corporation seeks approval of the survey that will be filled be responded to by the AmeriCorps members.

Type of Review: New approval.

Agency: Corporation for National and Community Service.

Title: Longitudinal Study of Member Outcomes.

OMB Number: None.

Agency Number: None.

Affected Public: Current and former Americorps members.

Total Respondents: Approximately 6,950.

Frequency: One time.

Average Time Per Response: 45 minutes.

Estimated Total Burden Hours: 5,213 hours.

Total Burden Cost (capital/startup): None.

Total Burden Cost (operating/maintenance): None.

Comments submitted in response to this notice will be summarized and/or included in the request for Office of Management and Budget approval of the information collection request; they will also become a matter of public record.

Dated: March 29, 1999.

Thomas L. Bryant,

Acting General Counsel.

[FR Doc. 99–8080 Filed 3–31–99; 8:45 am]

BILLING CODE 6050–28–U

DEPARTMENT OF DEFENSE

Office of the Secretary

Meeting of the Senior Advisory Board on National Security

AGENCY: Department of Defense, Office of the Under Secretary of Defense (Policy).

ACTION: Notice of partially closed meeting.

SUMMARY: This notice has been revised to reflect a new meeting location. Current world events necessitated moving the meeting site to accommodate key participants.

The Senior Advisory Board on National Security will meet in open and closed sessions on April 5–6, 1999. The Board was chartered by the Secretary of Defense to conduct a comprehensive review of the early twenty-first century global security environment; develop appropriate national security objectives and a strategy to attain these objectives; and recommend concomitant changes to the national security apparatus as necessary.

The Senior Advisory Board will meet in open session on the afternoon of 5 April with American business executives to discuss corporation forecasting methods and variables that corporations use in strategic planning. The closed session will occur on 6 April. At this session the Senior Advisory Board will review and discuss inputs for the Phase 1 report that the Study Group has prepared and that are based on classified material concerning global regional trends and possible conflict situations.

In accordance with section 10(d) of the Federal Advisory Committee Act, Public Law 92–463, as amended [5 U.S.C., Appendix II], it is anticipated that matters affecting national security, as covered by 5 U.S.C. 552b(c)(1)(1988), will be presented throughout the meeting on 6 April, and that, accordingly, the meeting will be closed to the public.

DATES: Monday, 5 April 1:30–5:00 p.m. (open); Tuesday, 6 April 8:30 a.m.–4:30 p.m. (Closed).

ADDRESSES: Crystal City Marriott Hotel, Salon E, 1999 Jefferson Davis Highway, Arlington, VA 22202; phone 703–413–5500.

FOR FURTHER INFORMATION CONTACT: Dr. Keith A. Dunn, National Security Study Group, Suite 532, Crystal Mall 3, 1931 Jefferson Davis Highway, Arlington, VA 22203–3805. Telephone 703–602–4175.

Dated: March 25, 1999.

L.M. Bynum,

Alternate OSD Federal Register Liaison Officer, Department of Defense.

[FR Doc. 99–7845 Filed 3–31–99; 8:45 am]

BILLING CODE 5001–10–M

DEPARTMENT OF DEFENSE

Department of the Air Force

Notice of Intent To Grant an Exclusive Patent License

Pursuant to the provisions of Part 404 of Title 37, Code of Federal Regulations, which implements Public Law 96–517, the Department of the Air Force announces its intention to grant Laser Photonics Technology, Inc. (hereafter Laser Photonics), a private company doing business in Amherst, NY, an exclusive license in any right, title and interest the Air Force has in: United States Patent No. 5,770,737 issued June 23, 1998 and filed in the name of Air Force employee Bruce A. Reinhardt and non-Air Force inventors Jayprakash C. Bhatt, Lawrence L. Brott, and Stephen J. Clarson for ''An Asymmetrical Dye With Large Two-Photon Absorption Cross-Sections;'' United States Patent No. 5,859,251 issued January 12, 1999 and filed in the name of Air Force employee Bruce A. Reinhardt and non-Air Force inventors Ramamurthi Kannan, Lawrence L. Brott, and Stephen J.

Clarson for ''Symmetrical Dyes With Large Two-Photon Absorption Cross-Section;'' and for Air Force Disclosure 332 filed in the United States Patent and Trademark Office on March 8, 1999 in the name of Air Force employee Bruce A. Reinhardt and non-Air Force inventor Ramamurthi Kannan for ''Benzothiazole-Containing Two-Photon Chromophores Exhibiting Strong Frequency Up Conversion.''

An exclusive license to the two patents and patent application described above will be granted unless an objection thereto, together with a request for an opportunity to be heard, if desired, is received in writing by the addressee set forth below within 60 days from the date of publication of this Notice. Information concerning the application may be obtained, on request, from the same addressee.

All communications concerning this Notice should be sent to Mr. Randy Heald, Patent Attorney, SAF/GCQ, 1740 Air Force Pentagon, Washington, DC 20330–1740, Telephone No. (703) 588–5091.

Carolyn A. Lunsford,

Air Force Federal Register Liaison Officer.

[FR Doc. 99–8037 Filed 3–31–99; 8:45 am]

BILLING CODE 5001–05–P

DEPARTMENT OF DEFENSE

Department of the Navy

Notice of Intent To Grant Exclusive Patent License; Madison Technology International, Ltd

AGENCY: Department of the Navy, DOD.

ACTION: Notice.

SUMMARY: The Department of the Navy hereby gives notice of its intent to grant Madison Technology International, Ltd., a revocable, nonassignable, exclusive license in the United States, to practice the Government-owned inventions described in U.S. Patent No. 5,379,270 entitled ''Acoustic-optic Sound Velocity Profiler'' and U.S. Patent No. 5,339,285 entitled ''Monolithic Low Noise Preamplifier for Piezoelectric Sensors'' in the field of underwater acoustic systems.

DATES: Anyone wishing to object to the grant of this license must file written objections along with supporting evidence, if any, not later than June 1, 1999.

ADDRESSES: Written objections are to be filed with the Naval Undersea Warfare Center Division, Newport, 1176 Howell St., Bldg 112T, Code OOOC, Newport, Rhode Island 02841.

FOR FURTHER INFORMATION CONTACT: Mr. M.J. McGowan, Deputy Counsel-Patents, Naval Undersea Warfare Center Division, Newport, 1176 Howell St., Bldg 112T, Code OOOC, Newport, Rhode Island 02841, telephone (401) 832–4736.

(Authority: 35 U.S.C. 207, 37 CFR Part 404)

Dated: March 25, 1999.

Pamela A. Holden,

Lieutenant Commander, Judge Advocate General's Corps, United States Navy, Federal Register Liaison Officer.

[FR Doc. 99–8034 Filed 3–31–99; 8:45 am]

BILLING CODE 3810–FF–P

DEPARTMENT OF EDUCATION

Notice of Proposed Information Collection Requests

AGENCY: Department of Education.

SUMMARY: The Acting Leader, Information Management Group, Office of the Chief Information Officer, invites comments on the proposed information collection requests as required by the Paperwork Reduction Act of 1995.

DATES: Interested persons are invited to submit comments on or before June 1, 1999.

ADDRESSES: Written comments and requests for copies of the proposed information collection requests should be addressed to Patrick J. Sherrill, Department of Education, 400 Maryland Avenue, S.W., Room 5624, Regional Office Building 3, Washington, D.C. 20202–4651, or should be electronically mailed to the internet address *Pat__Sherrill*@ed.gov, or should be faxed to 202–708–9346.

FOR FURTHER INFORMATION CONTACT: Patrick J. Sherrill (202) 708–8196. Individuals who use a telecommunications device for the deaf (TDD) may call the Federal Information Relay Service (FIRS) at 1-800–877–8339 between 8 a.m. and 8 p.m., Eastern time, Monday through Friday.

SUPPLEMENTARY INFORMATION: Section 3506 of the Paperwork Reduction Act of 1995 (44 U.S.C. Chapter 35) requires that the Office of Management and Budget (OMB) provide interested Federal agencies and the public an early opportunity to comment on information collection requests. OMB may amend or waive the requirement for public consultation to the extent that public participation in the approval process would defeat the purpose of the information collection, violate State or Federal law, or substantially interfere with any agency's ability to perform its statutory obligations. The Acting Leader, Information Management Group, Office of the Chief Information Officer, publishes that notice containing proposed information collection requests prior to submission of these requests to OMB. Each proposed information collection, grouped by office, contains the following: (1) Type of review requested, e.g. new, revision, extension, existing or reinstatement; (2) Title; (3) Summary of the collection; (4) Description of the need for, and proposed use of, the information; (5) Respondents and frequency of collection; and (6) Reporting and/or Recordkeeping burden. OMB invites public comment at the address specified above. Copies of the requests are available from Patrick J. Sherrill at the address specified above. The Department of Education is especially interested in public comment addressing the following issues: (1) is this collection necessary to the proper functions of the Department; (2) will this information be processed and used in a timely manner; (3) is the estimate of burden accurate; (4) how might the Department enhance the quality, utility, and clarity of the information to be collected; and (5) how might the Department minimize the burden of this collection on the respondents, including through the use of information technology.

Dated: March 26, 1999.

William E. Burrow,

Acting Leader, Information Management Group, Office of the Chief Information Officer.

Office of Postsecondary Education

Type of Review: New.

Title: Distance Education Demonstration Program Annual Evaluation.

Frequency: Annually.

Affected Public: Not-for-profit institutions; individuals or households; businesses or other for-profit.

Reporting and Recordkeeping Hour Burden:

Responses: 13,515.

Burden Hours: 1,485.

Abstract: The Distance Education Demonstration Program is a new program designed to test the quality and viability of expanded distance education programs that are currently restricted by provisions of the Higher Education Act (HEA). The HEA requires the Department to report to Congress annually on the results and specifies the areas which must be addressed.

Office of the Under Secretary

Type of Review: New.

Title: Evaluation of the Eisenhower Professional Development Program: State and Local Activities.

Frequency: One time.

Affected Public: State, local or Tribal Government; SEAs or LEAs.

Reporting and Recordkeeping Hour Burden:

Responses: 800

Burden Hours: 600.

Abstract: Professional Development Program and to report on the progress of professional development activities supported by the program, the effects of the program participation on classroom teaching, and the quality of program planning and coordination. Clearance is sought for the National Profile, Teacher Activity Survey, to be conducted in the Spring of the 1998–99 school year. Respondents will be teachers.

[FR Doc. 99–8003 Filed 3–31–99; 8:45 am]

BILLING CODE 4000–01–P

DEPARTMENT OF EDUCATION

National Assessment Governing Board; Submission for OMB Review; Comment Request

AGENCY: National Assessment Governing Board, Education.

ACTION: Submission for OMB review; comment request.

SUMMARY: The Executive Director, National Assessment Governing Board invites comments on the submission for OMB review as required by the Paperwork Reduction Act of 1995.

DATES: Interested persons are invited to submit comments on or before May 1, 1999.

ADDRESSES: Written comments should be addressed to the Office of Information and Regulatory Affairs, Attention: Danny Werfel, Desk Officer, Department of Education, Office of Management and Budget, 725 17th Street, NW., Room 10235, New Executive Office Building, Washington, DC 20503 or should be electronically mailed to the internet address Werfeld@a1.eop.gov. Requests for copies of the proposed information collection requests should be addressed to Steven Gorman, National Assessment Governing Board, 800 North Capitol Street, NW., Suite 825, Washington, DC 20002–4233 or should be electronically mailed to *Steven Gorman@ed.gov* or should be faxed to 202–275–6063.

FOR FURTHER INFORMATION CONTACT: Steven Gorman at 202–357–7502 by telephone, Steven__Gorman@ED.GOV by electronic mail, or Steven Gorman, National Assessment Governing Board, 800 North Capitol Street, NW., Suite 825, Washington, DC 20002–4233 by regular mail.

SUPPLEMENTARY INFORMATION: Section 3506 of the Paperwork Reduction Act of 1995 (44 U.S.C. Chapter 35) requires that the Office of Management and Budget (OMB) provide interested Federal agencies and the public an early opportunity to comment on information collection requests. OMB may amend or waive the requirement for public consultation to the extent that public participation in the approval process would defeat the purpose of the information collection, violate State or Federal law, or substantially interfere with any agency's ability to perform its statutory obligations. The Executive Director, National Assessment Governing Board, publishes this notice containing proposed information collection requests prior to submission of this request to OMB. The proposed information collection contains the following: (1) Type of review requested, e.g., new, revision, extension, existing or reinstatement; (2) Title; (3) Summary of the collection; (4) Description of the need for, and proposed use of, the information; (5) Respondents and frequency of collection; and (6) Reporting and/or Recordkeeping burden. OMB invites public comment at the address specified above. Copies of the requests are available from Steven Gorman at the address specified above.

Roy Truby,

Executive Director, National Assessment Governing Board.

Type of Review: New.

Title: Similarities Classification Validation Research Study for 1998 Civics National Assessment of Educational Progress.

Frequency: Once.

Affected Public: Individuals or households.

Reporting and Recordkeeping Hour Burden:

Responses: 1,500.

Burden Hours: 2,899.

Abstract: The student classification study involves teachers' estimates of the academic ability of their students and of their students' performance on the NAEP relative to each achievement level. Teachers will also classify performance of ''anonymous'' students represented in assessment booklets. These estimates are made with respect to the assessment framework and achievement levels descriptions. Teachers will not know how individual students performed on the assessment. The correspondence between classifications by teachers and classifications based on student performances will be measured.

[FR Doc. 99–8082 Filed 3–31–99; 8:45 am]

BILLING CODE 4000–01–M

DEPARTMENT OF ENERGY

Department of Energy Implementation Plan for Recommendation 98–1 of the Defense Nuclear Facilities Safety Board; Plan To Address and Resolve Safety Issues Identified by Internal Independent Oversight

AGENCY: Department of Energy.

ACTION: Notice.

SUMMARY: The Defense Nuclear Facilities Safety Board (DNFSB) published Recommendation 98–1, concerning the effectiveness of the Department of Energy (DOE) process to address and resolve the environment, safety and health issues identified by internal independent oversight, on October 6, 1998 (63 FR 53646). Under section 315(e) of the Atomic Energy Act of 1954, 42 U.S.C. 2286d(e), the DOE must transmit an implementation plan for Recommendation 98–1 to the DNFSB after acceptance of the Recommendation by the Secretary. The DOE's implementation plan was transmitted to the DNFSB on March 10, 1999, and is available for review in the DOE Public Reading Rooms.

ADDRESSES: Send comments, data, views, or arguments concerning the implementation plan to: U. S. Department of Energy, 1000 Independence Avenue, SW, Washington, DC, 20585.

FOR FURTHER INFORMATION CONTACT: Mr. Richard C. Crowe, Director, Safety Management Implementation Team, U.S. Department of Energy, 1000 Independence Avenue, SW, Washington, D.C., 20585.

Issued in Washington, DC, on March 25, 1999.

Mark B. Whitaker, Jr.,

Departmental Representative to the Defense Nuclear Facilities Safety Board.

The Secretary of Energy,

Washington, DC 20585

March 10, 1999.

Hon. **John T. Conway,**

Chairman, Defense Nuclear Facilities Safety Board, Washington, DC 20004.

Dear Mr. Chairman: We are pleased to forward the enclosed Implementation Plan (Plan) for Defense Nuclear Facilities Safety Board's (Board) Recommendation 98–1, *Department of Energy Plan to Address and Resolve Safety Issues Identified by Internal Independent Oversight.*

This Plan addresses the Department's need for a clearly defined, systematic, and comprehensive process to address and resolve safety issues identified by internal independent oversight. Specifically, the Department is taking the following actions to address its needs:

- We are establishing a disciplined process and clarifying roles and responsibilities for the identification of, and response to, safety issues.
- We are establishing clearer direction on elevating any disputed issues for resolution to the Office of the Secretary, if necessary.
- We are establishing a tracking and reporting system to manage completion of corrective actions effectively.

The Plan directly supports implementation of Integrated Safety Management and was prepared by a cross-organizational team reporting directly to me. I have assigned Mr. Richard Crowe, Director of the Safety Management Implementation Team, as my Responsible Manager for executing this Plan. Mr. Crowe can be reached at (202) 586–1418.

We appreciate the advice and support provided by the Board and its staff during the development of this Plan.

Yours sincerely,

Bill Richardson.

Enclosure.

[FR Doc. 99–8059 Filed 3–31–99; 8:45 am]

BILLING CODE 6450–01–P

DEPARTMENT OF ENERGY

[Docket No. FE C&E 99–3, C&E 99–4, C&E 99–5 and C&E 99–6, Certification Notice—170]

Office of Fossil Energy; Notice of Filings of Coal Capability of Panda Guadalupe Power, L.P., Lake Road Generating Co., Sabine Cogen, L.P. and Rathdrum Power, LLC, Powerplant and Industrial Fuel Use Act

AGENCY: Office of Fossil Energy, Department of Energy.

ACTION: Notice of Filing.

SUMMARY: Panda Guadalupe Power, L.P., Lake Road Generating Company, L.P., Sabine Cogen, L.P. and Rathdrum Power, LLC have submitted coal capability self-certifications pursuant to section 201 of the Powerplant and Industrial Fuel Use Act of 1978, as amended.

ADDRESSES: Copies of self-certification filings are available for public inspection, upon request, in the Office of Coal & Power Im/Ex, Fossil Energy, Room 4G–039, FE–27, Forrestal Building, 1000 Independence Avenue, SW, Washington, DC 20585.

FOR FURTHER INFORMATION CONTACT: Ellen Russell at (202) 586–9624.

SUPPLEMENTARY INFORMATION: Title II of the Powerplant and Industrial Fuel Use Act of 1978 (FUA), as amended (42 U.S.C. 8301 *et seq.*), provides that no new baseload electric powerplant may be constructed or operated without the capability to use coal or another alternate fuel as a primary energy source. In order to meet the requirement of coal capability, the owner or operator of such facilities proposing to use natural gas or petroleum as its primary energy source shall certify, pursuant to FUA section 201(d), to the Secretary of Energy prior to construction, or prior to operation as a base load powerplant, that such powerplant has the capability to use coal or another alternate fuel. Such certification establishes compliance with section 201(a) as of the date filed with the Department of Energy. The Secretary is required to publish a notice in the **Federal Register** that a certification has been filed. The following owners/operators of the proposed new baseload powerplants have filed a self-certification in acccordance with section 201(d).

Owner: Panda Guadalupe Power, L.P. (C&E 99–3).
Operator: Panda Guadalupe Power, L.P.
Location: Guadalupe County, TX.
Plant Configuration: Combined cycle.
Capacity: 1,000 megawatts.
Fuel: Natural gas.
Purchasing Entities: Unspecified wholesale power purchasers.
In-Service Date: December, 2000.

Owner: Lake Road Generating Company, L.P. (C&E 99–4).
Operator: Lake Road Generating Company, L.P.
Location: the Town of Killingly, CT.
Plant Configuration: Combined cycle.
Capacity: 792 megawatts.
Fuel: Natural gas.
Purchasing Entities: Unspecified wholesale power purchasers in New England.
In-Service Date: June, 2001.

Owner: Sabine Cogen, L.P. (C&E 99–5).
Operator: Air Liquide America Corporation (or an affiliate thereof).
Location: Orange County, TX.
Plant Configuration: Combined cycle.
Capacity: 100 megawatts.
Fuel: Natural gas.
Purchasing Entities: Bayer Chemical Company, Entergy Gulf States, Inc. and to wholesale power purchasers.
In-Service Date: November, 1999.

Owner: Rathdrum Power, LLC (C&E 99–6).
Operator: Rathdrum Operating Services, Inc.
Location: Rathdrum, Idaho.
Plant Configuration: Combined cycle.
Capacity: 270 megawatts.
Fuel: Natural gas.
Purchasing Entities: Avista Energy, Inc.
In-Service Date: October 1, 2001.

Issued in Washington, DC, March 26, 1999.

Anthony J. Como,

Manager, Electric Power Regulation, Office of Coal & Power Im/Ex, Office of Coal & Power Systems, Office of Fossil Energy.

[FR Doc. 99–8060 Filed 3–31–99; 8:45 am]

BILLING CODE 6450–01–P

DEPARTMENT OF ENERGY

Energy Information Administration

Agency Information Collection Activities: Proposed Collection; Comment Request

AGENCY: Energy Information Administration, DOE.

ACTION: Agency information collection activities: Proposed collection; comment request.

SUMMARY: The Energy Information Administration (EIA) is soliciting comments on the proposed extension to the forms listed below:

EIA–14, ''Refiners' Monthly Cost Report;''
EIA–182, ''Domestic Crude Oil First Purchase Report;''
EIA–782A, ''Refiners'/Gas Plant Operators' Monthly Petroleum Product Sales Report;''
EIA–782B, ''Resellers'/Retailers' Monthly Petroleum Product Sales Report;''
EIA–782C, ''Monthly Report of Petroleum Products Sold Into States for Consumption;''
EIA–821, ''Annual Fuel Oil and Kerosene Sales Report;''
EIA–856, ''Monthly Foreign Crude Oil Acquisition Report;''
EIA–863, ''Petroleum Product Sales Identification Survey;''
EIA–877, ''Winter Heating Fuels Telephone Survey;''
EIA–878, ''Motor Gasoline Price Survey,'' and
EIA–888, ''On-Highway Diesel Fuel Price Survey;''

DATES: Written comments must be submitted on or before June 1, 1999. If you anticipate difficulty in submitting comments within the 60 days, contact the person identified below as soon as possible.

ADDRESSES: Send comments to Jacob Bournazian, Energy Information Administration, EI-42, Forrestal Building, U.S. Department of Energy, Washington, DC 20585. Alternatively, Jacob Bournazian may be reached by phone at (202) 586–1256, by e-mail

Jacob.Bournazian@eia.doe.gov, or by FAX (202) 586–4913.

FOR FURTHER INFORMATION CONTACT: Requests for additional information or copies of the forms and instructions should be directed to Jacob Bournazian at the addresses listed above.

SUPPLEMENTARY INFORMATION:

I. Background
II. Current Actions
III. Request for Comments

I. Background

The Federal Energy Administration Act of 1974 (Pub. L. 93–275, 15 U.S.C. 761 *et seq.*) and the Department of Energy Organization Act (Pub. L. 95–91, 42 U.S.C. 7101 *et seq.*) requires the Energy Information Administration (EIA) to carry out a centralized, comprehensive, and unified energy information program. This program collects, evaluates, assembles, analyzes, and disseminates information on energy resource reserves, production, demand, technology, and related economic and statistical information. This information is used to assess the adequacy of energy resources to meet near and longer term domestic demands.

The EIA, as part of its effort to comply with the Paperwork Reduction Act of 1995 (Pub. L. 104–13, 44 U.S.C. Chapter 35), provides the general public and other Federal agencies with opportunities to comment on collections of energy information conducted by or in conjunction with the EIA. Any comments received help the EIA to prepare data requests that maximize the utility of the information collected, and to assess the impact of collection requirements on the public. Also, the EIA will later seek approval by the Office of Management and Budget (OMB) for the collections under section 3507(h) of the Paperwork Reduction Act of 1995.

The petroleum marketing survey forms collect information needed for determining the supply and demand of crude oil and refined petroleum products. These surveys provide a basic set of data pertaining to the structure, efficiency, and behavior of petroleum markets. These data are published by the Energy Information Administration in the *Monthly Energy Review, Annual Energy Review, Petroleum Marketing Monthly, Petroleum Marketing Annual, Weekly Petroleum Status Report,* and the *International Energy Outlook.*

II. Current Actions

EIA requests a one-year extension to the existing survey forms to collect data in calendar year 2000. EIA is requesting a one-year extension to minimize the cost and burden to survey respondents who are devoting significant resources during 1999 to make computer changes to their reporting systems for year 2000. In addition, EIA is also incurring computer system changes to prepare for year 2000.

III. Request for Comments

Prospective respondents and other interested persons are invited to comment on the actions discussed in item II. The following guidelines are provided to assist in the preparation of comments. Please indicate to which form(s) your comments apply.

General Issues

A. Is the proposed collection of information necessary for the proper performance of the functions of the agency and does the information have practical utility? Practical utility is defined as the actual usefulness of information to or for an agency, taking into account its accuracy, adequacy, reliability, timeliness, and the agency's ability to process the information it collects.

B. What enhancements can be made to the quality, utility, and clarity of the information to be collected?

As a Potential Respondent

A. Are the instructions and definitions clear and sufficient? If not, which instructions require clarification?

B. Can information be submitted by the due date?

C. Public reporting burdens for these collections are estimated to average per respondent:

EIA–14 = 1.6 hour; EIA–182 = 4.3 hours; EIA–782A = 15.0 hours; EIA–782B = 2.5 hours; EIA–782C = 2.1 hours; EIA–821 = 3.2 hours; EIA–856 = 6.1 hours; EIA–863 = 1.0; EIA–877 = 0.1 hour; EIA–878 = 0.05 hour; and EIA–888 = 0.05. The estimated burden includes the total time, effort, or financial resources expended to generate, maintain, retain, disclose and provide the information. Please comment on (1) the accuracy of the agency's estimate and (2) how the agency could minimize the burden of the collecting this information, including the use of information technology.

D. The agency estimates respondents will incur no additional costs for reporting other than the hours required to complete the collection. What is the estimated: (1) Total dollar amount annualized for capital and start-up costs; and (2) recurring annual costs of operation and maintenance, and purchase of services associated with this data collection?

E. Does any other Federal, State, or local agency collect similar information? If so, specify the agency, the data element(s), and the methods of collection.

As a Potential User

A. Is the information useful at the levels of detail indicated on the form?

B. For what purpose(s) would the information be used? Be specific.

C. Are there alternate sources for the information and are they useful? If so, what are their deficiencies and/or strengths?

Comments submitted in response to this notice will be summarized and/or included in the request for OMB approval of the form. They also will become a matter of public record.

Statutory Authority: Section 3506 (c)(2)(A) of the Paperwork Reduction Act of 1995 (Pub. L. No. 104–13, 44 U.S.C. Chapter 35).

Issued in Washington, DC, March 26, 1999.

Renee H. Miller,

Acting Director, Statistics and Methods Group, Energy Information Administration.

[FR Doc. 99–8058 Filed 3–31–99; 8:45 am]

BILLING CODE 6450–01–P

DEPARTMENT OF ENERGY

Federal Energy Regulatory Commission

[Docket No. EG99–102–000]

AEE 2, L.L.C.; Notice of Filing

March 26, 1999.

On March 22, 1999, AEE 2, L.L.C. (AEE 2), c/o Mr. Henry Aszklar, Vice President, AES NY, L.L.C., 1001 North 19th Street, Arlington, VA 22209, filed with the Federal Energy Regulatory Commission an application for determination of exempt wholesale generator status pursuant to Part 365 of the Commission's regulations. AEE 2 respectfully requests expedited action on this application by April 6, 1999.

AEE 2 is a Delaware limited liability company. AEE 2 intends to own, operate, and maintain the generating stations currently known as the Greenidge and Goudey stations, which are now owned by New York State Electric & Gas Corporation (''NYSEG'') and its affiliate NGE Generation, Inc. (NGE). Electricity generated by the facilities will be sold at wholesale to one or more power marketers, utilities, cooperatives, or other wholesalers.

Any person desiring to be heard concerning the application for exempt wholesale generator status should file a motion to intervene or comments with the Federal Energy Regulatory Commission, 888 First Street, NE,

Washington, DC 20426, in accordance with Rules 211 and 214 of the Commission's Rules of Practice and Procedure (18 CFR 385.211 and 385.214). The Commission will limit its consideration of comments to those that concern the adequacy or accuracy of the application. All such motions and comments should be filed on or before April 2, 1999, and must be served on the applicant. Any person wishing to become a party must file a motion to intervene. Copies of this filing are on file with the Commission and are available for public inspection or on the Internet at http://www.ferc.fed.us/online/rims.htm (please call (202) 208–2222 for assistance).

Linwood A. Watson, Jr.,

Acting Secretary.

[FR Doc. 99–7980 Filed 3–31–99; 8:45 am]

BILLING CODE 6717–01–M

DEPARTMENT OF ENERGY

Federal Energy Regulatory Commission

[Docket No. TM99–1–22–005]

CNG Transmission Corporation; Notice of Compliance Tariff Filing

March 26, 1999.

Take notice that on March 22, 1999, CNG Transmission Corporation (CNG), tendered for filing as part of its FERC Gas Tariff, Second Revised Volume No. 1, the following tariff sheet, with an effective date of February 26, 1999:

Fifth Revised Sheet No. 354

CNG states that the purpose of this filing is to comply with directives of the Commission's February 26, 1999 Order on CNG's October 1, 1998 Transportation Cost Rate Adjustment (TCRA) filing. Specifically, CNG has modified language on its enclosed tariff sheet to reflect the Commission's directive to reinstate language requiring usage charge recovery of fuel costs in Section 16.5 of noted tariff sheet.

CNG states that copies of its letter of transmittal and enclosures are being mailed to parties of record in the captioned proceedings.

Any person desiring to protest said filing should file a protest with the Federal Energy Regulatory Commission, 888 First Street, NE, Washington, DC 20426, in accordance with Section 385.211 of the Commission's Rules and Regulations. All such protests must be filed as provided in Section 154.210 of the Commission's Regulations. Protests will be considered by the Commission in determining the appropriate action to be taken, but will not serve to make protestants parties to the proceedings. Copies of this filing are on file with the Commission and are available for public inspection in the Public Reference Room. This filing may be viewed on the web at http://www.ferc.fed.us/online/rims.htm (call (202) 208–2222 for assistance).

Linwood A. Watson, Jr.,

Acting Secretary.

[FR Doc. 99–7981 Filed 3–31–99; 8:45 am]

BILLING CODE 6717–01–M

DEPARTMENT OF ENERGY

Federal Energy Regulatory Commission

[Docket No. CP85–221–108]

Frontier Gas Storage Company; Notice of Sale Pursuant to Settlement Agreement

March 26, 1999.

Take notice that on March 11, 1999, Frontier Gas Storage Company (Frontier), c/o Reid & Priest, Market Square, 701 Pennsylvania Ave., NW, Suite 800, Washington, DC 20004, in compliance with provisions of the Commission's February 13, 1985, Order in Docket No. CP82–487–000, *et al.*, submitted and executed Service Agreement, dated March 11, 1999, under Rate Schedule LVS–1 providing for the sale of all of Frontier's remaining storage gas inventory, not to exceed 6,850,000 MMBtu to WBI Production, Inc. on an ''in place'' basis. The sales price of the gas was not disclosed.

Under Subpart (b) of Ordering Paragraph (G) of the Commission's February 13, 1985, Order, Frontier is ''authorized to consummate the proposed sale in place unless the Commission issues an order within 20 days after expiration of such notice period either directing that the sale not take place and setting it for hearing or permitting the sale to go forward and establishing other procedures for resolving the matter. Deliveries of gas sold in place shall be made pursuant to a schedule to be set forth in an exhibit to the executed service agreement.''

Any person desiring to be heard or to make a protest with reference to said filing should, within 10 days of the publication of such notice in the **Federal Register**, file with the Federal Energy Regulatory Commission, 888 1st Street NE, Washington, DC 20426, a motion to intervene or protest in accordance with the requirements of the Commission's Rules of Practice and Procedures, 18 CFR 385.214 or 385.211. Protests will be considered by the Commission in determining the appropriate action to be taken, but will not serve to make protestants parties to the proceeding. Copies of this filing are on file with the Commission and are available for public inspection. This filing may also be viewed on the web at http://www.ferc.fed.us/online/rims.htm (please call (202) 208–2222 for assistance).

Linwood A. Watson, Jr.,

Acting Secretary.

[FR Doc. 99–7983 Filed 3–31–99; 8:45 am]

BILLING CODE 6717–01–M

DEPARTMENT OF ENERGY

Federal Energy Regulatory Commission

[Docket No. RP99–258–001]

Midwestern Gas Transportation Company; Notice of Revised Cashout Report Refund Allocation Schedule

March 26, 1999.

Take notice that on March 12, 1999, Midwestern Gas Transmission Company (Midwestern) tendered for filing a revised Appendix C detailing the allocation of refunds associated with its annual report of cashout activity for the September 1995 through August 1996 period.

The 1995–1996 Cashout Report filed March 3, 1999, in Docket No. RP99–258–000 reflects that Midwestern's cashout operations for the 1995–1996 period experienced a net gain of $33,741. Midwestern will refund this gain to its firm shippers within 30 days of the Commission's acceptance of the cashout report through a demand surcharge. Midwestern has submitted a revised Appendix C to the 1995–1996 Cashout Report, which details the allocation of refunds associated with the cashout gain. The revisions to Appendix C to the cashout report affect the allocation of refunds to Midwestern's firm shippers but do not impact the total level of refunds to be credited.

Midwestern states that a copy of the report has been served upon affected customers, interested state commission, and all parties designated on the official service list.

Any person desiring to protest said filing should file a protest with the Federal Energy Regulatory Commission, 888 First Street, N.E., Washington, D.C. 20426, in accordance with Section 358.211 of the Commission's Rules and Regulations. All such protests must be filed on or before April 2, 1999. Protests will be considered by the Commission in determining the appropriate action to be taken, but will not serve to make protestants parties to the proceedings.

Copies of this filing are on file with the Commission and are available for public inspection in the Public Reference Room. This filing may be viewed on the web at http://www.ferc.fed.us/online/rims.htm (call 202–208–2222 for assistance).

Linwood A. Watson, Jr.,

Acting Secretary.

[FR Doc. 99–7993 Filed 3–31–99; 8:45 am]

BILLING CODE 6717–01–M

DEPARTMENT OF ENERGY

Federal Energy Regulatory Commission

[Docket No. RP98–310–003]

Natural Gas Pipeline Company of America; Notice of Compliance Filing

March 26, 1999.

Take notice that on February 26, 1999, Natural Gas Pipeline Company of America (Natural) tendered for filing certain tariff sheets to be part of its FERC Gas Tariff, Sixth Revised Volume No. 1, to be effective August 1, 1998 and January 1, 1999.

Natural states that the filing is submitted pursuant to the Commission's order issued February 11, 1999 in Docket Nos. RP98–310–001 and 002, which approved tariff sheets that Natural filed on August 13, 1998 in Docket No. RP98–310–001 (August 13th Filing) subject to Natural filing revised tariff sheets that clarify that Natural may not enter into transactions like Natural described in its August 13th Filing under Natural's discount rate authority. Additionally, Natural States that it has also flowed through these changes to several corresponding tariff sheets filed and approved in Docket Nos. RP98–145–000, RP99–176–000 and 001 to be effective August 1, 1998 and January 1, 1999.

Natural requested any waivers which may be required to permit the tendered tariff sheets to become effective August 1, 1998 and January 1, 1999, consistent with the Commission's orders issued July 30, 1998 and December 30, 1998 in Docket Nos. RP98–310–000 and RP99–176–000, respectively.

Natural states that copies of the filing have been mailed to its customers, interested state regulatory agencies and all parties set out on the Commission's official service list in Docket No. RP98–310.

Any person desiring to protest this filing should file a protest with the Federal Energy Regulatory Commission, 888 First Street, N.W., Washington, D.C. 20426, in accordance with Section 385.211 of the Commission's Rules and Regulations. All such protests must be filed as provided in Section 154.210 of the Commission's Regulations. Protests will be considered by the Commission in determining the appropriate action to be taken, but will not serve to make protestants parties to the proceedings. Copies of this filing are on file with the Commission and are available for public inspection in the Public Reference Room. This filing may be viewed on the web at http://www.ferc.fed.us/online/rims.htm (call 202–208–2222 for assistance).

Linwood A. Watson, Jr.,

Acting Secretary.

[FR Doc. 99–7992 Filed 3–31–99; 8:45 am]

BILLING CODE 6717–01–M

DEPARTMENT OF ENERGY

Federal Energy Regulatory Commission

[Docket No. CP99–262–000]

Tennessee Gas Pipeline Company; Notice of Application

March 26, 1999.

Take notice that on March 17, 1999, Tennessee Gas Pipeline Company (Tennessee), 1001 Louisiana, Houston, Texas 77002, filed in Docket No. CP99–262–000 an application pursuant to Section 7(c) of the Natural Gas Act (NGA) and Part 157 of the Federal Energy Regulatory Commission's (Commission) Regulations, for a certificate of public convenience and necessity authorizing Tennessee to construct, install and operate compression and certain minor facilities in order to provide additional firm transportation service to customers in Zone 6 of its pipeline system (referred to as Eastern Express Project 2000—Zone 6 Receipts), all as more fully set forth in the application which is on file with the Commission and open to public inspection. This filing may be viewed on the web at http://www.ferc.fed.us/online/rims.htm (call 202–208–222 for assistance).

Specifically, Tennessee proposes to: (1) install an additional 6150 horsepower compressor at its Compressor Station No. 261 in Hampden County, Massachusetts; (2) install an additional 7,170 horsepower compressor at its Compressor Station No. 266–A in Worcester County, Massachusetts; and (3) add an 8–inch delivery tap to its existing Southern Connecticut-Milford delivery point on Tennessee's 300 Line in New Haven County, Connecticut. Tennessee also proposes to construct and install certain facilities, in Worcester and Middlesex Counties, Massachusetts and in Hartford County, Connecticut, pursuant to Section 2.55(a) of the Commission's Regulations. The estimated total cost of the proposed facilities is $28,143,423.

Tennessee states that the proposed facilities will increase capacity on its Blackstone Lateral downstream of Compressor Station No. 266–A by 292,000 Dth/d, and will increase capacity on its 300 Line downstream of Compressor Station No. 261 by 83,000 Dth/d. Tennessee further states that, as the result of an open-season held from February 12, 1998 through March 24, 1998, Tennessee has entered into binding precedent agreements for firm transportation service to be rendered pursuant to Tennessee's Rate Schedule FT–A for 90,000 Dth/d of capacity associated with deliveries on its Blackstone Lateral and for 83,000 Dth/d of capacity associated with deliveries on its 300 Line. Tennessee requests approval of the service agreements for the project which contain certain provisions which are different from those contained in Tennessee's *pro forma* FT–A Agreement.

Shippers were given the option of selecting negotiated rates of recourse rates. Tennessee states that the negotiated rates provide for fixed reservation and commodity charges, for the primary term of the shipper's transportation agreement, in the amounts of $3.22 per Dth/month for the reservation charge, and, for the commodity charge, $0.0643 for the first five years and $0.0543 for the second five years. The recourse rates are the applicable maximum reservation and commodity rates for transportation service within Zone 6 under Tennessee's Rate Schedule FT–A. Tennessee states that all shippers selected negotiated rates, and that revenues collected during the primary terms of the contracts will exceed the incremental cost-of-service for the project over a 10-year period.

Tennessee states that the proposed project will enable gas supplies accessed by Portland Natural Gas Transmission System and Maritimes & Northeast Pipeline L.L.C. pipelines to be delivered to existing and new markets in New England. Tennessee requests that the Commission grant the requested authorizations by December 31, 1999, so that Tennessee can place the project in service by November 1, 2000.

Any person desiring to be heard or making any protest with reference to said application should on or before April 16, 1999, file with the Federal Energy Regulatory Commission, 888 First Street, NE, Washington, DC 20426, a motion to intervene or a protest in

accordance with the requirements of the Commission's Rules of Practice and Procedure (18 CFR 385.214 or 385.211) and the Regulations under the Natural Gas Act (18 CFR 157.10). All protests filed with the Commission will be considered by it in determining the appropriate action to be taken but will not serve to make the protestants parties to the proceeding. The Commission's rules require that protestors provide copies of their protests to the party or person to whom the protests are directed. Any person wishing to become a party to a proceeding or to participate as a party in any hearing therein must file a motion to intervene in accordance with the Commission's Rules.

A person obtaining intervenor status will be placed on the service list maintained by the Secretary of the Commission and will receive copies of all documents issued by the Commission, filed by the applicant, or filed by all other intervenors. An intervenor can file for rehearing of any Commission order and can petition for court review of any such order. However, an intervenor must serve copies of comments or any other filing it makes with the Commission to every other intervenor in the proceeding, as well as filing an original and 14 copies with the Commission.

A person does not have to intervene, however, in order to have comments considered. A person, instead, may submit two copies of such comments to the Secretary of the Commission. Commenters will be placed on the Commission's environmental mailing list, will receive copies of environmental documents, and will be able to participate in meetings associated with the Commission's environmental review process. Commenters will not be required to serve copies of filed documents on all other parties. However, commenters will not receive copies of all documents filed by other parties or issued by the Commission, and will not have the right to seek rehearing or appeal the Commission's final order to a Federal court.

The Commission will consider all comments and concerns equally, whether filed by commenters or those requesting intervenor status.

Take further notice that, pursuant to the authority contained in and subject to the jurisdiction conferred upon the Federal Energy Regulatory Commission by Sections 7 and 15 of the NGA and the Commission's Rules of Practice and Procedure, a hearing will be held without further notice before the Commission or its designee on these applications if no motion to intervene is filed within the time required herein, if the Commission on its own review of the matter finds that a grant of the certificate is required by the public convenience and necessity. If a motion for leave to intervene is timely filed, or if the Commission on its own motion believes that a formal hearing is required, further notice of such hearing will be duly given.

Under the procedure herein provided for, unless otherwise advised, it will be unnecessary for Tennessee to appear or be represented at the hearing.

Linwood A. Watson, Jr.

Acing Secretary.

[FR Doc. 99–7985 Filed 3–31–99; 8:45 am]

BILLING CODE 6717–01–M

DEPARTMENT OF ENERGY

Federal Energy Regulatory Commission

[Docket No. CP99–270–000]

Texas Eastern Transmission Corporation; Notice of Request Under Blanket Authorization

March 26, 1999.

Take notice that on March 23, 1999, Texas Eastern Transmission Corporation (Texas Eastern), 5400 Westheimer Court, Houston, Texas 77056–5310, filed in Docket No. CP99–270–000 a request pursuant to Section 157.205 and 157.211 of the Commission's regulations under the Natural Gas Act (18 CFR 157.205 and 157.211). Texas Eastern requests authorization to construct a delivery point on Texas Eastern's existing 30-inch Line Nos. 10 and 25 in Choctaw County, Mississippi, to make natural gas deliveries to the Town of Weir (Town of Weir), a Mississippi corporation and municipality. Texas Eastern makes such request under its blanket certificate issued in Docket No. CP82–535–000 pursuant to Section 7 of the Natural Gas Act, all as more fully set forth in the request on file with the Commission and open to public inspection. The filing may be viewed on the web at http://www.ferc.fed.us/online/rims.htm (call 202–208–2222 for assistance).

Texas Eastern proposes to construct and install a 10-inch tap valve, a 10-inch check valve and a 10-inch insulating flange (Tap), and electronic gas measurement equipment (EGM), at approximate Mile Post 32.04 in Choctow County, Mississippi.

It is stated that the Town of Weir will install, or cause to be installed a dual 10-inch meter run plus associated piping (Meter Station), and approximately 50 feet of 10-inch pipeline which will extend from the Meter Station to the Tap (Connecting Pipe).

It is indicated that the proposed facilities will be used to deliver up to 135,000 Mcf of natural gas per day to the Town of Weir. Texas Eastern estimates it's construction cost to be approximately $263,631.00 and states that the Town of Weir will reimburse it's cost.

Texas Eastern indicates that the transportation service will be rendered pursuant to Texas Eastern's open access Rate Schedules included in Texas Eastern's F.E.R.C. Ga Tariff, Sixth Revised Volume No. 1. It is averred that the transportation service to be rendered through the delivery point proposed herein will be performed utilizing existing capacity on Texas Eastern's system, and will have no effect on Texas Eastern's peak day or annual deliveries. Texas Eastern submits that its proposals will be accomplished without detriment or disadvantages to Texas Eastern's other customers.

Any person or the Commission's staff may, within 45 days after issuance of the instant notice by the Commission, file pursuant to Rule 214 of the Commission's Procedural Rules (18 CFR 385.214) a motion to intervene or notice of intervention and pursuant to Section 157.205 of the Regulations under the Natural Gas Act (18 CFR 157.205), a protest to the request. If no protest is filed within the time allowed therefore, the proposed activity shall be deemed to be authorized effective the day after the time allowed for filing a protest. If a protest is filed and not withdrawn within 30 days after the time allowed for filing a protest, the instant request shall be treated as an application for authorization pursuant to Section 7 of the Natural Gas Act.

Linwood A. Watson, Jr.,

Acting Secretary.

[FR Doc 99–7986 Filed 3–31–99; 8:45 am]

BILLING CODE 6717–01–M

DEPARTMENT OF ENERGY

Federal Energy Regulatory Commission

[Docket Nos. CP99–61–000 and CP99–64–000]

Tristate Pipeline, L.L.C.; Notice of Site Visit

March 26, 1999.

From April 19 to 22, 1999, the Office of Pipeline Regulation (OPR) staff will conduct an inspection of the route proposed by TriState Pipeline, L.L.C. (TriState) for its pipeline project. The

proposed route and route alternatives, crossing portions of Illinois, Indiana, and Michigan, will be inspected by helicopter and automobile.

The current itinerary is to conduct a ground and aerial inspection between Joliet, Illinois, and Valparaiso, Indiana on April 19; a ground and aerial inspection between Valparaiso, Indiana and White Pigeon, Michigan and April 20; a ground and aerial inspection in Oakland County and Macomb County, Michigan on April 21, and a ground inspection in Macomb County, Michigan on April 22. If weather conditions preclude an overflight, the inspection will be conducted by automobile only from a location to be determined. Representatives of TriState will accompany the OPR staff.

All parties may attend, although those planing to attend must provide their own transportation.

For further information, please contact Paul McKee of the Commission's Office of External Affairs at (202) 208–1088.

Linwood A. Watson, Jr.,

Acting Secretary.

[FR Doc. 99–7984 Filed 3–31–99; 8:45 am]

BILLING CODE 6717–01–M

DEPARTMENT OF ENERGY

Federal Energy Regulatory Commission

[Project No. 2146–083 Alabama]

Alabama Power Company; Notice of Availability of Draft Environmental Assessment

March 26, 1999.

In accordance with the National Environmental Policy act of 1969 and the Federal Energy Regulatory Commission's (Commission's) regulations, the Office of Hydropower Licensing has reviewed the application for the proposed Amendment of License for the Coosa River Project, located in Talladega County, Alabama, and has prepared a Draft Environmental Assessment (DEA) for the proposed action.

In the DEA, the Commission's staff has analyzed the potential environmental impacts of The Utilities Board of the City of Sylacauga, Alabama (Board) constructing and operating a raw water intake and pumping station on Lay Reservoir. The staff has concluded that, given the mitigative measures proposed by the Board, approval of the action would not constitute a major federal action significantly affecting the quality of the human environment.

The EA was written by staff in the office of Hydropower Licensing, Federal Energy Regulatory Commission. Copies of the EA can be viewed at the Commission's Reference and Information Center, Room 2A, 888 First Street, N.E., Washington, D.C. 20426, or by calling (202) 208–1371. The DEA may be viewed on the Web at www.ferc.fed.us/online/rims.htm. Call (202) 208–2222 for assistance.

Any comments should be filed within 30 days from the date of this notice and should be addressed to Dave Boergers, Secretary, Federal Energy Regulatory Commission, 888 First Street, N.E., Washington, D.C. 20426. Please Affix ''Coosa River Project Amendment of License, Project No. 2146–083'' to all comments. For further information, please contact Jim Haimes at (202) 219 2780

Linwood A. Watson, Jr.,

Acting Secretary.

[FR Doc. 99–7987 Fild 3–31–99; 8:45 am]

BILLING CODE 6717–01–M

DEPARTMENT OF ENERGY

Federal Energy Regulatory Commission

Notice of Extension of Time To File Comments, Recommendations, Terms and Conditions, and Prescriptions for License Application

March 26, 1999.

Take notice that the time limit for filing comments, recommendations, terms and conditions, and prescriptions for the following hydroelectric license applicaiton has been extended from March 26, 1999 to May 26, 1999. The extension was requested by the Vermont Department of Environmental Conservation to continue pursuing consensus of all the parties on measures needed to protect the environment, and no party has objected to a 60-day extension:

a. *Type of Application:* New Major License.

b. *Project No.:* 2731–020.

c. *Date Filed:* May 27, 1998.

d. *Applicant:* Central Vermont Public Service Corporation.

e. *Name of Project:* Weybridge Project.

f. *Location:* On Otter Creek, at river mile 19.5 from the confluence with Lake Champlain, in Addison County, Vermont. There are no federal lands located within the project area.

g. *Filed Pursuant to:* Fedral Power Act 16 U.S.C. 791(a)–825(r).

h. *Applicant Contact:* Mr. John C. Greenan, P.E., Central Vermont Public Service Corporation, 77 Grove Street, Rutland, Vermont 05701, (802) 747–5707.

i. *FERC Contact:* Any questions on this notice should be addressed to Jack Duckworth, E-mail address, jack.duckworth@ferc.fed.us, or telephone (202) 219–2818.

j. *Deadline for comments, recommendations, terms and conditions, and prescriptions:* May 26, 1999.

All documents (original and eight copies) should be filed with: David P. Boergers, Secretary, Federal Energy Regulatory Commission, 888 First Street, NE, Washington, DC 20426.

The Commission's Rules of Practice and Procedure require all intervenors filing documents with the Commission to serve a copy of that document on each person whose name appears on the official service list for the project. Further, if an intervenor files comments or documents with the Commission relating to the merits of an issue that may affect the responsibilities of a particular resource agency, they must also serve a copy of the document on that resource agency.

k. *Status of environmental analysis:* This application has been accepted for filing and is ready for environmental analysis at this time.

l. *Description of the Project:* The project consists of the following existing facilities: (1) a 30-foot-high, 302.6-foot-long concrete gravity dam consisting of two spillway sections, a 150-ft-long west spillway section, topped with a 6-foot-high hinged steel flashboard, and abutted by a 20-foot-wide and 10-foot-high Taintor gate, and a 116-foot-long east spillway section topped with an automatically inflated rubber weir; (2) a 1.5-mile-long, 62-acre impoundment with a normal water surface elevation of 174.3 feet above mean sea level (msl); (3) a powerhouse integral with the dam containing a single turbine generator with an installed capacity of 3,000 kilowatts (kW); (4) transmission facilities; and (5) appurtenant facilities.

m. *Locations of the Application:* A copy of the application is available for inspection and reproduction at the Commission's Public Reference Room, located at 888 First Street, NE, Room 2A, Washington, DC 20426, or by calling (202) 208–1371. The application may be viewed on the web at www.ferc.fed.us. Call (202) 208–2222 for assistance. A copy is also available for inspection and reproduction at the address shown in item h.

n. *This notice also consists of the following standard paragraph:* D10.

D10. Filing and Service of Responsive Documents—The application is ready for environmental analysis at this time,

and the Commission is requesting comments, reply comments, recommendations, terms and conditions, and prescriptions.

The Commission directs, pursuant to section 4.34(b) of the Regulations (see Order No. 533 issued May 8, 1991, 56 FR 23108, May 20, 1991) that all comments, recommendations, terms and conditions and prescriptions concerning the application be filed with the Commisison within 60 days from the issuance date of this notice. All reply comments must be filed with the Commisison within 105 days from the date of this notice.

Anyone may obtain an extension of time for these deadlines from the Commission only upon a showing of good cause or extraordinary circumstances in accordance with 18 CFR 385.2008.

All filings must (1) bear in all capital letters the title ''COMMENTS'', ''REPLY COMMENTS'', RECOMMENDATIONS,'' ''TERMS AND CONDITIONS,'' or ''PRESCRIPTIONS;'' (2) set forth in the heading the name of the applicant and the project number of the application to which the filing responds; (3) furnish the name, address, and telephone number of the person submitting the filing; and (4) otherwise comply with the requirements of 18 CFR 385.2001 through 385.2005. All comments, recommendations, terms and conditions or prescriptions must set forth their evidentiary basis and otherwise comply with the requirements of 18 CFR 4.34(b). Agencies may obtain copies of the application directly from the applicant. Any of these documents must be filed by providing the original and the number of copies required by the Commission's regulations to: The Secretary, Federal Energy Regulatory Commission, 888 First Street, NE, Washington, DC 20426. An additional copy must be sent to Director, Division of Project Review, Office of Hydropower Licensing, Federal Energy Regulatory Commisison, at the above address. Each filing must be accompanied by proof of service on all persons listed on the service list prepared by the Commisison in this proceeding, in accordance with 18 CFR 4.34(b), and 385.2010.

Linwood A. Watson, Jr.,

Acting Secretary.

[FR Doc. 99–7982 Filed 3–31–99; 8:45 am]

BILLING CODE 6717–01–M

DEPARTMENT OF ENERGY

Federal Energy Regulatory Commission

Notice of Surrender of License and Soliciting Comments, Motions To Intervene, and Protests

March 26, 1999.

Take notice that the following hydroelectric application has been filed with the Commission and is available for public inspection:

a. *Application Type:* Surrender of License.

b. *Project No:* 2585–002.

c. *Date Filed:* January 4, 1999.

d. *Applicant:* Northbrook Carolina Hydro, LLC.

e. *Name of Project:* Idols.

f. *Location:* On the Yadkin River, in Forsyth County, North Carolina near the City of Winston-Salem. The project does not utilize federal or tribal lands.

g. *Filed Pursuant to:* 18 CFR § 4.200.

h. *Applicant Contact:* Mr. Mark Sunquist, Northbrook Carolina Hydro, LLC, 225 W. Wacker Drive, Suite 2330, Chicago, IL 60606, (312) 553–2136.

i. *FERC Contact:* Any questions on this notice should be addressed to Tom Papsidero at (202) 291–2715, or e-mail address: Thomas.Papsidero@ferc.fed.us.

j. *Deadline for filing comments and/or motions:* May 6, 1999.

All documents (original and eight copies) should be filed with: David P. Boergers, Secretary, Federal Energy Regulatory Commission, Mail Code: DLC, HL–11.1, 888 First Street, NE., Washington, DC 20426.

Please include the project number (2585–002) on any comments or motions filed.

k. *Description of Surrender:* Northbrook Carolina Hydro, LLC, a corporation, requests to surrender the license for this constructed project for economic reasons following a fire in the project powerhouse on February 8, 1998.

1. *Location of the application:* A copy of the application is available for inspection and reproduction at the Commission's Public Reference Room, located at 888 First Street, NE, Room 2A, Washington, DC. 20426, or by calling (202) 208–1371. This filing may be viewed on http:www.ferc.fed.us/online/rims.htm (call (202) 208–2222 for assistance). A copy is also available for inspection and reproduction at the address in item h above.

m. *Individuals desiring to be included on the Commission's mailing list should so indicate by writing to the Secretary of the Commission.*

n. *This notice also consists of the following standard paragraphs:* B, C1, D2.

B. Comments, Protests, or Motions to Intervene—Anyone may submit comments, a protest, or a motion to intervene in accordance with the requirements of Rules of Practice and Procedure, 18 CFR 385.210, .211, .214. In determining the appropriate action to take, the Commission will consider all protests or other comments filed, but only those who file a motion to intervene in accordance with the Commission's Rules may become a party to the proceeding. Any comments, protests, or motions to intervene must be received on or before the specified comment date for the particular application.

C1. Filing and Service of Responsive Documents—Any filings must bear in all capital letters the title ''COMMENTS'', ''RECOMMENDATIONS FOR TERMS AND CONDITIONS'', ''PROTESTS'', or ''MOTION TO INTERVENE'', as applicable, and the Project Number of the particular application to which the filing refers. Any of the above-named documents must be filed by providing the original and the number of copies provided by the Commission's regulations to: The Secretary, Federal Energy Regulatory Commission, 888 First Street, NE., Washington, DC. 20426. A copy of any motion to intervene must also be served upon each representative of the Applicant specified in the particular application.

D2. Agency Comments—Federal, state, and local agencies are invited to file comments on the described application. A copy of the application may be obtained by agencies directly from the Applicant. If an agency does not file comments within the time specified for filing comments, it will be presumed to have no comments. One copy of an agency's comments must also be sent to the Applicant's representatives.

Linwood A. Watson, Jr.,

Acting Secretary.

[FR Doc. 99–7988 Filed 3–31–99; 8:45 am]

BILLING CODE 6717–01–M

DEPARTMENT OF ENERGY

Federal Energy Regulatory Commission

Notice of Application for Transfer of License and Soliciting Comments, Motions to Intervene, and Protest

March 26, 1999.

Take notice that the following hydroelectric application has been filed with the Commission and is available for public inspection:

a. *Application Type:* Transfer of License.

b. *Project No.:* 9690–044.

c. *Date Filed:* March 17, 1999.

d. *Applicant:* Orange and Rockland Utilities, Inc. and Southern Energy NY-Gen, L.L.C.

e. *Name of Project:* Rio Project.

f. *Location:* The project is located on the Mongaup River in Orange County, New York. The project does not utilize federal or tribal lands.

g. *Filed Pursuant to:* Federal Power Act, 16 U.S.C. §§ 791(a)–825(r).

h. *Applicant Contact:* Jane J. Quin, Orange and Rockland Utilities, Inc., One Blue Hill Plaza, Pearl River, NY 10965, (914)–577–2439 and Craig S. Lesser, Southern Energy New York G.P., Inc., 900 Ashwood Drive, Suite 500, Atlanta, GA 20228, (770) 821–7838.

i. *FERC Contact:* Any questions on this notice should be addressed to Regina Saizan at (202) 219–2673, or e-mail address regina.saizan@ferc.fed.us.

j. *Deadline for filing comments, motions to intervene, or protests:* April 20, 1999.

All documents (original and eight copies) should be filed with: David P. Boergers, Secretary, Federal Energy Regulatory Commission, Mail Code: DLC, HL–11.1, 888 First Street, N.E., Washington, DC. 20426.

Please include the Project Number (9690–044) on any comments, protests, or motions filed.

k. *Description of Transfer:* The transfer will facilitate the implementation of a series of asset sales agreements pursuant to which Orange and Rockland Utilities, Inc. (ORU) intends to sell its electric generation assets to various subsidiaries of Southern Energy, Inc. (including Southern Energy NY-Gen). ORU has entered into these agreements in order to comply with the policies of the New York Public Service Commission mandating, in part, ORU's divestiture of these assets in order to implement the State of New York's desire to foster a competitive, regional electric generation market through retail competition.

l. *Locations of the Application:* A copy of the application is available for inspection and reproduction at the Commission's Public Reference Room, located at 888 First Street NE, Room 2A, Washington, DC, 20426, or by calling (202) 208–1371. This filing may be viewed on http://www.ferc.fed.us/online/rims.htm (call (202) 208–2222 for assistance). A copy is also available for inspection and reproduction at the addresses in item h above.

m. Individuals desiring to be included on the Commission's mailing list should so indicate by writing to the Secretary of the Commission.

n. *This notice also consists of the following standard paragraphs:* B, C1, and D2.

B. Comments, Protests, or Motions to Intervene—Anyone may submit comments, a protest, or a motion to intervene in accordance with the requirements of Rules of Practice and Procedure, 18 CFR 385.210, .211, .214. In determining the appropriate action to take, the Commission will consider all protests or other comments filed, but only those who file a motion to intervene in accordance with the Commission's Rules may become a party to the proceeding. Any comments, protests, or motions to intervene must be received on or before the specified comment date for the particular application.

C1. Filing and Service of Responsive Documents—Any filings must bear in all capital letters the title ''COMMENTS'', ''RECOMMENDATIONS FOR TERMS AND CONDITIONS'', ''PROTEST'', or ''MOTION TO INTERVENE'', as applicable, and the Project Number of the particular application to which the filing refers. Any of the above-named documents must be filed by providing the original and the number of copies provided by the Commission's regulations to: The Secretary, Federal Energy Regulatory Commission, 888 First Street, N.E., Washington, D.C. 20426. A copy of any motion to intervene must also be served upon each representative of the Applicant specified in the particular application.

D2. Agency Comments—Federal, state, and local agencies are invited to file comments on the described application. A copy of the application may be obtained by agencies directly from the Applicant. If an agency does not file comments within the time specified for filing comments, it will be presumed to have no comments. One copy of an agency's comments must also be sent to the Applicant's representatives.

Linwood A. Watson, Jr.,

Acting Secretary.

[FR Doc. 99–7989 Filed 3–31–99; 8:45 am]

BILLING CODE 6717–01–M

DEPARTMENT OF ENERGY

Federal Energy Regulatory Commission

Notice of Application for Transfer of License and Soliciting Comments, Motions to Intervene, and Protests

March 26, 1999.

a. *Application Type*: Transfer of License.

b. *Project No.:* 10481–022.

c. *Date Filed:* March 17, 1999.

d. *Applicant:* Orange and Rockland Utilities, Inc. and Southern Energy NY-Gen, L.L.C.

e. *Name of Project:* Mongaup Falls Project.

f. *Location:* The project is located on the Mongaup River in Sullivan County, New York. The project does not utilize federal or tribal lands.

g. *Filed Pursuant to:* Federal Power Act, 16 U.S.C. § § 791 (a)-825(r).

h. *Applicant Contact:* Jane J. Quin, Orange and Rockland Utilities, Inc., One Blue Hill Plaza, Pearl River, NY 10965, (914)–577–2439 and Craig S. Lesser, Southern Energy New York G.P., Inc., 900 Ashwood Drive, Suite 500, Atlanta, GA 30338, (770) 821–7838.

i. *FERC Contact:* Any questions on this notice should be addressed to Regina Saizan at (202) 219–2673, or e-mail address regina.saizan@ferc.fed.us.

j. *Deadline for filing comments, motions to intervene, or protests:* April 20, 1999

All documents (original and eight copies) should be filed with: David P. Boergers, Secretary, Federal Energy Regulatory Commission, Mail Code: DLC, HL–11.1, 888 First Street, N.E., Washington, DC 20426.

Please include the Project Number (10481–022) on any comments, protests, or motions filed.

k. *Description of Transfer:* The transfer will facilitiate the implementation of a series of asset sales agreements pursuant to which Orange and Rockland Utilities, Inc. (ORU) intends to sell its electronic generation asserts to various subsidiaries of Southern Energy, Inc. (includng Southern Energy NY-Gen). ORU has entered into these agreements in order to comply with the policies of the New York Public Service Commission mandating, in part, ORU's divestiture of

these assets in order to implement the State of New York's desire to foster a competitive, regional electric generation market through retail competition.

l. *Locations of the Application:* A copy of the application is available for inspection and reproduction at the Commission's Public Reference Room, located at 888 First Street NE, Room 2A, Washington, DC, 20426, or by calling (202) 208–1371. This filing may be viewed on http://www.ferc.fed.us/online/rims.htm (call (202) 208–2222 for assistance). A copy is also available for inspection and reproduction at the addresses in item h above.

m. Individuals desiring to be included on the Commission's mailing list should so indicate by writing to the Secretary of the Commission.

n. *This notice also consists of the following standard paragraphs: B, C1, and D2.*

B. Comments, Protests, or Motions to Intervene—Anyone may submit comments, a protest, or a motion to intervene in accordance with the requirements of Rules of Practice and Procedure, 18 CFR 385.210, .211, .214. In determining the appropriate action to take, the Commission will consider all protests or other comments filed, but only those who file a motion to intervene in accordance with the Commission's Rules may become a party to the proceeding. Any comments, protests, or motions to intervene must be received on or before the specified comment date for the particular application.

C1. Filing and Service of Responsive Documents—Any filings must bear in all capital letters the title ''COMMENTS'', ''RECOMMENDATIONS FOR TERMS AND CONDITIONS'', ''PROTEST'', or ''MOTIONS TO INTERVENE'', as applicable, and the Project Number of the particular application to which the filing refers. Any of the above-named documents must be filed by providing the original and the number of copies provided by the Commission's regulations to: The Secretary, Federal Energy Regulatory Commission, 888 First Street, N.E., Washington, D.C. 20426. A copy of any motion to intervene must also be served upon each representative of the Applicant specified in the particular application.

D2. Agency Comments—Federal, state, and local agencies are invited to file comments on the described application. A copy of the application may be obtained by agencies directly from the Applicant. If an agency does not file comments within the time specified for filing comments, it will be presumed to have no comments. One copy of an agency's comments must also be sent to the Applicant's representatives.

Linwood A. Watson, Jr.,

Acting Secretary.

[FR Doc. 99–7990 Filed 3–31–99; 8:45 am]

BILLING CODE 6717–01–M

DEPARTMENT OF ENERGY

Federal Energy Regulatory Commission

Notice of Application for Transfer of License and Soliciting Comments, Motions To Intervene, and Protests

March 26, 1999.

Take notice that the following hydroelectric application has been filed with the Commission and is available for public inspection:

a. *Applicaton Type:* Transfer of License.

b. *Project No.:* 10482–035.

c. *Date Filed:* March 17, 1999.

d. *Applicant:* Orange and Rockland Utilities, Inc. and Southern Energy NY-Gen, L.L.C.

e. *Name of Project:* Swinging Bridge Project.

f. *Location:* The project is located on the Mongaup River in Sullivan County, New York. The project does not utilize federal or tribal lands.

g. *Filed Pursuant to:* Federal Power Act, 16 U.S.C. 791(a)–825(r).

h. *Applicant Contact:* Jane J. Quin, Orange and Rockland Utilities, Inc., One Blue Hill Plaza, Pearl River, NY 10965, (914) 577–2439, and Craig S. Lesser, Southern Energy New York G.P., Inc., 900 Ashwood Drive, Suite 500, Atlanta, GA 30338, (770) 821–7838.

i. *FERC Contact:* Any questions on this notice should be addressed to Regina Saizan at (202) 219–2673, or e-mail address regina.saizan@ferc.fed.us.

j. *Deadline for filing comments, motions to intervene, or protests:* April 20, 1999.

All documents (original and eight copies) should be filed with: David P. Boergers, Secretary, Federal Energy Regulatory Commission, Mail Code: DLC, HL–11.1, 888 First Street, N.E., Washington, DC 20426.

Please include the Project Number (10482–035) on any comments, protests, or motions filed.

k. *Description of Transfer:* The transfer will facilitate the implementation of a series of asset sales agreements pursuant to which Orange and Rockland Utilities, Inc. (ORU) intends to sell its electric generation assets to various subsidiaries of Southern Energy, Inc. (including Southern Energy NY-Gen). ORU has entered into these agreements in order to comply with the polices of the New York Public Service Commission mandating, in part, ORU's divestiture of these assets in order to implement the State of New York's desire to foster a competitive, regional electric generation market through retail competition.

l. *Locations of the Application:* A copy of the application is available for inspection and reproduction at the Commission's Public Reference Room, located at 888 First Street NE, Room 2A, Washington, DC 20426, or by calling (202) 208–1371. This filing may be viewed on http://www.ferc.fed.us/online/rims.htm (call (202) 208–2222 for assistance). A copy is also available for inspection and reproduction at the addresses in item h above.

m. Individuals desiring to be included on the Commission's mailing list should so indicate by writing to the Secretary of the Commission.

n. *This notice also consists of the following standard paragraphs:* B, C1, and D2.

B. Comments, Protests, or Motions to Intervene—Anyone may submit comments, a protest, or a motion to intervene in accordance with the requirements of Rules of Practice and Procedure, 18 CFR 385.210, .211, and .214. In determining the appropriate action to take, the Commission will consider all protests or other comments filed, but only those who file a motion to intervene in accordance with the Commission's Rules may become a party to the proceeding. Any comments, protests, or motions to intervene must be received on or before the specified comment date for the particular application.

C1. Filing and Service of Responsive Documents—Any filings must bear in all capital letters the title ''COMMENTS'', ''RECOMMENDATIONS FOR TERMS AND CONDITIONS'', ''PROTEST'', or ''MOTION TO INTERVENE'', as applicable, and the Project Number of the particular application to which the filing refers. Any of the above-named documents must be filed by providing the original and the number of copies provided by the Commission's regulations to: The Secretary, Federal Energy Regulatory Commission, 888 First Street, N.E., Washington, D.C. 20526. A copy of any motion to intervene must also be served upon each representative of the Applicant specified in the particular application.

D2. Agency Comments—Federal, state, an local agencies are invited to file comments on the described application. A copy of the application may be

obtained by agencies directly from the Applicant. If an agency does not file comments within the time specified or filing comments, it will be presumed to have no comments. One copy of an agency's comments must also be sent to the Applicant's representatives.

Linwood A. Watson, Jr.,

Acting Secretary,

[FR Doc. 99–7991 Filed 3–31–99; 8:45 am]

BILLING CODE 6717–01–M

DEPARTMENT OF ENERGY

Federal Energy Regulatory Commission

Notice of Surrender of Exemption and Soliciting Comments, Motions To Intervene, and Protests

March 26, 1999.

Take notice that the following hydroelectric application has been filed with the Commission and is available for public inspection:

a. *Application Type:* Surrender of Exemption.

b. *Project No.:* 7108–001.

c. *Date Filed:* November 18, 1998.

d. *Applicant:* Virginia Hydro, Inc.

e. *Name of Project:* Grove Mill.

f. *Location:* On the Middle River, in Augusta County, Virginia. The project does not utilize federal or tribal lands.

g. *Filed Pursuant to:* 18 CFR 4.200.

h. *Applicant Contact:* Mr. John Pollack, P.O. Box 265, Batesville, VA 22924, (804) 823–7330.

i. *FERC Contact:* Any questions on this notice should be addressed to Tom Papsidero at (202) 219–2715, or e-mail address: Thomas.Papsidero@ferc.fed.us.

j. *Deadline for filing comments and/or motions:* May 3, 1999.

All documents (original and eight copies) should be filed with: David P. Boergers, Secretary, Federal Energy Regulatory Commission, Mail Code: DLC, HL–11.1, 888 First Street, NE., Washington, DC 20426.

Please include the project number (7108–001) on any comments or motions filed.

k. *Description of Surrender:* Virginia Hydro, Inc., a corporation, requests to surrender the exemption for economic reasons as a result of hurricane damage at the project.

l. *Locations of the application:* A copy of the application is available for inspection and reproduction at the Commission's Public Reference Room, located at 888 First Street, NE., Room 2A, Washington, DC 20426, or by calling (202) 208–1371. This filing may be viewed on http://www.ferc.fed.us/online/rims.htm (call (202) 208–2222 for assistance). A copy is also available for inspection and reproduction at the address in item h above.

m. Individuals desiring to be included on the Commission's mailing list should so indicate by writing to the Secretary of the Commission.

n. *This notice also consists of the following standard paragraphs:* B, C1, D2.

B. Comments, Protests, or Motions to Intervene—Anyone may submit comments, a protest, or a motion to intervene in accordance with the requirements of Rules of Practice and Procedure, 18 CFR 385.210, .211, .214. In determining the appropriate action to take, the Commission will consider all protests or other comments filed, but only those who file a motion to intervene in accordance with the Commission's Rules may become a party to the proceeding. Any comments, protests, or motions to intervene must be received on or before the specified comment date for the particular application.

C1. Filing and Service of Responsive Documents—Any filings must bear in all capital letters the title ''COMMENTS'', ''RECOMMENDATIONS FOR TERMS AND CONDITIONS'', ''PROTEST'', or ''MOTION TO INTERVENE'', as applicable, and the Project Number of the particular application to which the filing refers. Any of the above-named documents must be filed by providing the original and the number of copies provided by the Commission's regulations to: The Secretary, Federal Energy Regulatory Commission, 888 First Street, NE., Washington, DC 20426. A copy of any motion to intervene must also be served upon each representative of the Applicant specified in the particular application.

D2. Agency Comments—Federal, state, and local agencies are invited to file comments on the described application. A copy of the application may be obtained by agencies directly from the Applicant. If an agency does not file comments within the time specified for filing comments, it will be presumed to have no comments. One copy of an agency's comments must also be sent to the Applicant's representatives.

Linwood A. Watson, Jr.

Acting Secretary.

[FR Doc. 99–7994 Filed 3–31–99; 8:45 am]

BILLING CODE 6712–01–M

DEPARTMENT OF ENERGY

Western Area Power Administration

Record of Decision and Floodplain Statement for the Interconnection of the Southpoint Power Plant With the Western Area Power Administration's Parker-Davis No. 1 and No. 2, 230-kilovolt Transmission Lines (DOE/EIS–0308)

AGENCY: Western Area Power Administration, DOE.

ACTION: Record of Decision.

SUMMARY: Calpine Corporation (Calpine) applied for transmission service from the Western Area Power Administration (Western) for the Southpoint Power Plant Project. To accommodate the request, Western proposed to upgrade its transmission system in order to accommodate the incorporation of new generation into the system. This Record of Decision (ROD) and Statement of Findings has been prepared in accordance with Council on Environmental Quality regulations for implementing the National Environmental Policy Act (NEPA) (40 CFR parts 1500–1508) and Department of Energy (DOE) Procedures for Implementing NEPA (10 CFR part 1021), and DOE's Floodplain/Wetland Review Requirements (10 CFR 1022). Western's decision for its action considered the environmental ramifications of the Southpoint Power Plant Project. Western has determined that no significant environmental impacts will result from construction, operation and maintenance of Calpine Corporation's Southpoint Power Plant, the two natural gas pipelines, or the approximately 7 miles of high voltage transmission lines, or from the upgrade of the Parker-Davis No. 1 230-kilovolt (kV) transmission line. Therefore, Western has decided to provide an interconnection with the plant and Western's transmission system in west central Arizona. However, Calpine has yet to obtain a permit from the Bureau of Land Management (BLM) for the construction of the two natural gas pipelines. Western will reconsider this decision if Calpine fails to obtain the permit from the BLM.

FOR FURTHER INFORMATION CONTACT: Mr. John Holt, Environment Manager, Desert Southwest Customer Service Region, Western Area Power Administration, P.O. Box 6457, Phoenix, AZ 85005, telephone (602) 352–2592, email holt@wapa.gov. Copies of the Environmental Impact Statement (EIS) and the Bureau of Indian Affairs ROD are available from Ms. Amy Heuslein,

Area Environmental Protection Officer, Bureau of Indian Affairs, P.O. Box 10, Phoenix, AZ 85001.

SUPPLEMENTARY INFORMATION: Western based its decision on the information contained in the Bureau of Indian Affairs (BIA) Southpoint Power Plant Project EIS (BIA EIS 98–25; Final dated November 1998), the BLM's Topock Substation Environmental Assessment (EA) 1997 and South Point Natural Gas Pipeline draft EA. The Phoenix Area Office of the BIA prepared the Southpoint Power Plant Project EIS in considering the approval of a lease between Calpine and the Fort Mojave Indian Tribe (Tribe) for the project site. Western was designated a cooperating agency for the Southpoint Power Plant Project EIS by the BIA on November 24, 1998. After an independent review of the Final EIS, Western concluded that its comments and suggestions have been satisfied and adopted the BIA EIS for its participation in the Southpoint Power Plant Project. However, following the preparation of the Final EIS and based on system studies conducted for the proposed interconnection, Western identified a need to upgrade its existing Parker-Davis No. 1 230-kV transmission line between the Topock Substation and the Parker Substation. To determine whether a Supplemental EIS was required for the proposed upgrade, Western prepared a Supplement Analysis (DOE/EIS–0308–SA–1) pursuant to 10 CFR part 1021. Based on the Supplement Analysis, Western determined that no further NEPA documentation is required for the proposed upgrade. Therefore, Western has decided to provide an interconnection for the power plant with Western's Parker-Davis transmission system in west-central Arizona and enter into construction agreements with Calpine Corporation for new transmission lines described in the EIS.

The Southpoint Power Plant Project EIS addresses the effects of constructing and operating a 540-megawatt, natural gas-fired, combined cycle, electrical generation station on the Fort Mojave Indian Reservation in Mojave County, Arizona. Calpine proposes to lease the site from the Fort Mojave Indian Tribe (Tribe) to build the project. The project will include the construction of a natural gas transmission system for supplying fuel to the plant site, a water transmission system for cooling and on-site use, and an electric transmission system for delivering the power. The BIA ROD (March 1999) for the Southpoint Power Plant Project indicated that the environmentally preferred alternative was selected, and concluded that no significant, unmitigated impacts will occur.

The gas transmission system will include two pipelines, one connected to an El Paso Natural Gas pipeline and one to a Transwestern Gas Company pipeline. The second pipeline will ensure reliability. The BLM, Lake Havasu Field Office, is the lead Federal agency for the gas pipeline. A draft EA has been prepared for the grant of right-of-way for the gas pipeline. A review of the draft EA has shown that the pipeline will have no significant impacts. BLM's visual resource management requirements will be met, and impacts to soils and geology will be moderate due to the erosion potential. There will be no long-term impacts to air quality. Biological resources are rare to nonexistent in the project area, and the pipeline will not affect significant cultural properties. The project will impact floodplains but impacts will be minor. Only one Federally protected species, the southwestern willow flycatcher, has been documented in the area; however, there is no habitat for that species in the vicinity of the pipeline route.

The water transmission system will consist of a pipeline, which will carry water from the Tribe's existing pumping platform on the Colorado River to the power plant site. The system will be part of the Tribe's central irrigation pumping complex. A backup system consisting of two wells on site will be used only if river water becomes temporarily unavailable. Process wastewater will be handled separately from domestic wastewater. Domestic wastewater will be collected and trucked to the Tribe's wastewater treatment plant. Process wastewater, the waste stream created by operation of the power plant, will be discharged into a 30-acre evaporation pond located on the bluffs above the proposed plant.

The electric transmission system includes the Topock Substation, which is being built by the Arizona Electric Power Cooperative. The Topock facility includes the substation, two 69-kV transmission lines for local service, and two 230-kV transmission lines to tie into Western's Parker-Davis No. 1 and No. 2, 230-kV Transmission Lines. The Kingman Field Office of the BLM was the lead Federal agency for the EA. The BLM issued a finding of no significant impact for the substation project in 1997. Western will construct two 230-kV transmission lines to bring power from the Southpoint Power Plant to the Topock Substation.

Western will also be required to upgrade the existing Parker-Davis No. 1 Transmission Line in order to carry the additional load from the Southpoint Power Plant. The upgrade will require the replacement of the existing conductor and the addition of up to 15 new structures for that portion of the line from the Topock Substation to the Parker Dam Substation. These structures will add support to the line where additional ground clearance is required. The design of the new lines and the upgraded facilities is such that electrocutions of birds of prey will be minimized.

Description of Alternatives

The BIA evaluated three alternative power plant sites. The environmentally preferred location was selected. The No Action Alternative for the power plant was evaluated and found that it will not meet the needs of the Tribe. The natural gas pipeline draft EA evaluated two different routing locations and identified the environmentally preferred route. The gas pipeline No Action Alternative will not meet the need of providing natural gas to fuel the power plant. The Topock Substation EA, which is incorporated into the Southpoint Power Plant Project EIS by reference, evaluated two alternative substation locations, two system configurations, three routing alternatives, and two access alternatives. In each case, Western selected the environmentally preferred alternative. The No Action Alternative was not selected because it will not meet the needs defined in the Southpoint Power Plant Project EIS and the Supplement Analysis. Nor will the No Action Alternative allow Western to meet its obligations defined by its own Open Access Transmission Tariff which was implemented to meet the intent of the Federal Energy Regulatory Commission (FERC) order to open transmission line access (FERC Order Nos. 888 and 888–A).

Mitigation Measures

The BIA identified mitigation measures needed to reduce the impacts of Southpoint Power Plant to less than significant levels. The specific measures are discussed in the EIS on pages 229 to 231. In addition, mitigative measures associated with the Topock Substation EA are discussed on pages 3–3; 3–10; 3–14; 3–18; and Appendix A. Mitigative measures are suggested in the draft EA for the natural gas pipeline in Appendix A. Each agency will be required to monitor the project for compliance with its own mitigation measures. Table 3.1–4 of Western's Supplement Analysis lists the standard mitigative measures that are part of every Western

construction contract that will apply to this project. Some of the measures include restricting vehicular traffic to existing access roads or public roads, re-contouring and reseeding disturbed areas, environmental awareness training for all construction and supervisory personnel, and mitigation of radio and television interference generated by transmission lines. Mitigation for the desert tortoise is in Table 3.1–5 of the Supplement Analysis.

Specific mitigation that applies to the construction of the new lines and the upgrading of the existing lines is identified in the Supplement Analysis. These measures include the following provisions:

1. A desert tortoise mitigation plan which will include compensation for unmitigated impacts;
2. Restriction of construction and routine maintenance activities along the transmission lines in bighorn sheep lambing areas between January 1 and June 30;
3. When existing conductors are replaced, non-specular conductors will be used; and
4. High-pressure sodium lights will be turned on only when maintenance personnel are present.

Floodplain/Wetlands Statement of Findings

Construction of the Southpoint Power Plant will result in substantial alteration to the natural drainage patterns onsite. However, no significant impacts to off-site drainage patterns or stormwater volumes will result from the construction of the plant or the associated facilities. The existing volume of stormwater flows, prior to construction of the plant, will be retained on site in constructed basins to minimize sheet flows.

Only minor impacts from constructing the gas pipeline are anticipated to the floodplain of the unnamed wash in the southwest corner of Section 9, Township 17 North, Range 21 West. The ground surface will remain relatively unchanged from pre-development conditions.

The electric transmission system avoids floodplains to the extent practical. The Topock Substation and associated lines are not located in designated floodplains. The existing Parker-Davis No. 1 230-kV transmission line crosses some ephemeral washes, but few transmission structures were placed in the floodplains.

No wetlands or waters of the United States will be affected by the proposed action. The proposed facilities will conform to all Tribal, State, and local floodplain protection standards.

Dated: March 19, 1999.

Michael S. Hacskaylo,

Administrator.

[FR Doc. 99–8057 Filed 3–31–99; 8:45 am]

BILLING CODE 6450–01–P

ENVIRONMENTAL PROTECTION AGENCY

[FRL–6318–4]

Proposed Settlement Pursuant to Section 122(g) of the Comprehensive Environmental Response, Compensation, and Liability Act, Regarding the Friedrichsohn's Cooperage, Inc. Superfund Site, Waterford, Saratoga County, NY

AGENCY: Environmental Protection Agency.

ACTION: Notice of proposed administrative settlement and opportunity for public comment.

SUMMARY: In accordance with Section 122(i) of the Comprehensive Environmental Response, Compensation, and Liability Act of 1980, as amended (''CERCLA''), 42 U.S.C. 9622(i), the U.S. Environmental Protection Agency (''EPA''), Region II, announces a proposed administrative *de minimis* settlement pursuant to Section 122(g)(4) of CERCLA, 42 U.S.C. 9622(g)(4), relating to the Friedrichsohn's Cooperage, Inc. Superfund Site (''Site''), located at 153–155 Saratoga Avenue in the Town of Waterford, Saratoga County, New York. This notice is being published pursuant to Section 122(i) of CERCLA to inform the public of the proposed settlement and give the public the opportunity to comment.

The proposed settlement, between EPA and Mohawk Paper Mills, Inc., Reliable Motor Parts Co., Monsey Products Co., and American Chemical and Equipment Co., Inc. (''Respondents''), has been memorialized in an Administrative Order on Consent (Index Number II–CERCLA–98–0210). This Agreement will become effective after the close of the public comment period, unless comments received disclose facts or considerations which indicate the Agreement is inappropriate, improper, or inadequate, and EPA, in accordance with Section 122(i)(3) of CERCLA, modifies or withdraws its consent to the Agreement. Under the settlement, Respondents will be obligated to make payment of $37,259.43 to the Hazardous Substance Superfund in reimbursement of EPA response costs relating to the Site. This payment is based on documentation indicating each company contributed minimal volumes of hazardous substances to the Site. In exchange, the settling companies will receive a covenant not to sue from EPA relating to liability for the Site under Sections 106 and 107(a) of CERCLA, 42 U.S.C. 9606 and 9607(a).

DATES: Comments must be provided on or before May 3, 1999.

ADDRESSES: Comments should be addressed to the U.S. Environmental Protection Agency, Office of Regional Counsel, New York/Caribbean Superfund Branch, 17th Floor, 290 Broadway, New York, New York 10007–1866, and should refer to: ''Friedrichsohn's Cooperage, Inc. Superfund Site, U.S. EPA Index No. II–CERCLA–98–0210''. For a copy of the settlement document, contact the individual listed below.

FOR FURTHER INFORMATION CONTACT: Elizabeth Leilani Davis, Assistant Regional Counsel, New York/Caribbean Superfund Branch, Office of Regional Counsel, U.S. Environmental Protection Agency, 17th Floor, 290 Broadway, New York, New York 10007. Telephone: (212) 637–3249.

Dated: March 9, 1999.

William J. Muszynski,

Acting Regional Administrator, Region II.

[FR Doc. 99–8085 Filed 3–31–99; 8:45 am]

BILLING CODE 6560–50–P

ENVIRONMENTAL PROTECTION AGENCY

[PB–402404–WV; FRL–6066–6]

Lead-Based Paint Activities in Target Housing and Child-Occupied Facilities; The State of West Virginia's Authorization Application

AGENCY: Environmental Protection Agency (EPA).

ACTION: Notice; request for comments and opportunity for public hearing.

SUMMARY: On December 17, 1998, the State of West Virginia submitted an application for EPA approval to administer and enforce training and certification requirements, training program accreditation requirements, and work practice standards for lead-based paint activities in target housing and child-occupied facilities under section 402 of the Toxic Substances Control Act (TSCA). This notice announces the receipt of West Virginia's application, provides a 45–day public comment period, and provides an opportunity to request a public hearing on the application.

DATES: Comments on the authorization application must be received on or before May 17, 1999. Public hearing requests must be received on or before May 3, 1999.

ADDRESSES: Submit all written comments and/or requests for a public hearing identified by docket control number ''PB–402404–WV'' (in duplicate) to: Environmental Protection Agency, Region III, Waste and Chemicals Management Division, Toxics Programs and Enforcement Branch (3WC33), 1650 Arch St., Philadelphia, PA 19103–2029. Comments, data, and requests for a public hearing may also be submitted electronically to: johnson.artencia@epa.gov. Follow the instructions under Unit IV. of this document. No information claimed to be Confidential Business Information (CBI) should be submitted through e-mail.

FOR FURTHER INFORMATION CONTACT: Artencia R. Johnson (3WC33), Waste and Chemicals Management Division, Environmental Protection Agency, Region III, 1650 Arch St., Philadelphia, PA 19103–2029, telephone: (215) 814–5754; e-mail address: johnson.artencia@epa.gov.

SUPPLEMENTARY INFORMATION:

I. Background

On October 28, 1992, the Housing and Community Development Act of 1992, Pub. L. 102–550, became law. Title X of that statute was the Residential Lead-Based Paint Hazard Reduction Act of 1992. That Act amended TSCA (15 U.S.C. 2601 *et seq.*) by adding Title IV (15 U.S.C. 2681–2692), entitled ''Lead Exposure Reduction.''

Section 402 of TSCA authorizes and directs EPA to promulgate final regulations governing lead-based paint activities in target housing, public and commercial buildings, bridges, and other structures. Those regulations are to ensure that individuals engaged in such activities are properly trained, that training programs are accredited, and that individuals engaged in these activities are certified and follow documented work practice standards. Under section 404 of TSCA, a State may seek authorization from EPA to administer and enforce its own lead-based paint activities program.

On August 29, 1996 (61 FR 45777) (FRL–5389–9), EPA promulgated final TSCA section 402/404 regulations governing lead-based paint activities in target housing and child-occupied facilities (a subset of public buildings). Those regulations are codified at 40 CFR part 745, and allow both States and Indian Tribes to apply for program authorization. Pursuant to section 404(h) of TSCA, EPA is to establish the Federal program in any State or Tribal Nation without its own authorized program in place by August 31, 1998.

States and Tribes that choose to apply for program authorization must submit a complete application to the appropriate Regional EPA Office for review. Those applications will be reviewed by EPA within 180 days of receipt of the complete application. To receive EPA approval, a State or Tribe must demonstrate that its program is at least as protective of human health and the environment as the Federal program, and provides for adequate enforcement (section 404(b) of TSCA, 15 U.S.C. 2684(b)). EPA's regulations (40 CFR part 745, subpart Q) provide the detailed requirements a State or Tribal program must meet in order to obtain EPA approval.

A State may choose to certify that its lead-based paint activities program meets the requirements for EPA approval by submitting a letter signed by the Governor or Attorney General stating that the program meets the requirements of section 404(b) of TSCA. Upon submission of such certification letter, the program is deemed authorized. This authorization becomes ineffective, however, if EPA disapproves the application.

Pursuant to section 404(b) of TSCA, EPA provides notice and an opportunity for a public hearing on a State or Tribal program application before authorizing the program. Therefore, by this notice EPA is soliciting public comment on whether West Virginia's application meets the requirements for EPA approval. This notice also provides an opportunity to request a public hearing on the application. If a hearing is requested and granted, EPA will issue a **Federal Register** notice announcing the date, time, and place of the hearing. EPA's final decision on the application will be published in the **Federal Register**.

II. State Program Description Summary

The following summary of the State of West Virginia's proposed program has been provided by the applicant:

In September 1994, the Radiation, Toxics and Indoor Air Division created a Lead Program to provide environmental lead assessments in childhood lead poisoning cases, to: prepare grant submittals for Federal monies to support the program; promulgate legislation and regulations to meet Federal mandates; provide technical assistance to local and State agencies; and conduct lead hazard awareness and education outreach activities to inform the public of the dangers of lead poisoning.

The Lead Program has received Federal funding for the past 4 years. During this time, the program has conducted or coordinated over 230 environmental lead assessments in childhood lead poisoning cases. The Program sponsored creation of a Lead Advisory Committee to assist in drafting proposed legislation to meet Federal mandates. The Program continues to provide lead hazard awareness materials and technical assistance to local and State agencies and the public.

Beginning in January 1996, and also in January 1997, the Bureau for Public Health submitted proposed lead legislation for consideration by the Legislature. The proposed legislation would amend West Virginia's Health Code Chapter 16 by adding a new statute, Article 35, ''Lead Abatement Act.'' It was not until January 1998, that the Legislature acted upon the proposed legislation. The bill passed on March 14, 1998, and became effective June 15, 1998. Subsequent emergency-filed rules were filed with the West Virginia Secretary of State on June 16, 1998.

West Virginia Code 16-35 requires lead abatement professionals conducting lead abatement in child-occupied buildings and target housing to be properly trained by an accredited training provider, certified by a State accredited examiner and licensed by the Bureau for Public Health. The licensing categories consist of lead abatement contractor, worker, supervisor, inspector, risk assessor and project designer.

Lead abatement projects are restricted to target housing (pre-1978) or residences that have known lead hazards. Notification of abatement projects and elevated blood lead levels are required. Home owners removing and handling lead on their own premises are exempt from notification and licensing requirements.

The Commissioner of the Bureau for Public Health will administer and enforce WV Code 16-35 and WV Title 64 Series 45, which includes: issuing licenses; assessing fees and fines; approving training providers; approving third party examiners; work practices; project clearance levels; and ordering reduction or abatement of lead hazards. In addition to the detailing of acceptable and non-acceptable abatement project work practices, the rules also incorporate by reference HUD and OSHA work practices and clearance levels.

The proposed statute establishes a special revenue account for implementing the article, allows for

reciprocity with other States with similar programs as stringent as West Virginia's, and provides for enforcement with civil penalties from $250 to $5,000. The statute also creates a misdemeanor offense for violations, and upon conviction, a fine of not less than $250 nor more than $50,000 and/or confinement in the county or regional jail for not more than 1 year may be imposed. Fines imposed must be paid by violators within 30 days of receipt of notification, failure to do so constitutes a separate violation. When non-compliance with this article or promulgated rules occurs at abatement projects, a Notice of Violation will be issued directing compliance with the law. When warranted, Cease and Desist Orders may be issued on lead abatement projects, which if violated could result in civil penalties of not less than $10,000 nor more than $25,000 for initial violations and not less than $25,000 nor more than $50,000 for subsequent violations.

The Bureau for Public Health is committed to assuring that the Federal mandates are met through effective implementation of WV Code 16-35 and Title 64 Series 45, and through implementation of a mandated public awareness and education program. The necessary infrastructure is in place at the local and State level to implement an EPA-approved program for the licensing and certification of lead abatement professionals. The Bureau for Public Health has contracted with local health agencies to provide environmental lead assessments, public outreach and education at the local level for the past 2 years. Also, it is felt that the successful operation of the asbestos certification and licensure program, since 1989, has prepared the Bureau to assume the responsibility of operating another environmental certification and licensure program.

III. Federal Overfiling

TSCA section 404(b) makes it unlawful for any person to violate, or fail, or refuse to comply with, any requirement of an approved State or Tribal program. Therefore, EPA reserves the right to exercise its enforcement authority under TSCA against a violation of, or a failure or refusal to comply with, any requirement of an authorized State or Tribal program.

IV. Public Record and Electronic Submissions

The official record for this action, as well as the public version, has been established under docket control number ''PB–402404–WV.'' Copies of this notice, the State of West Virginia's authorization application, and all comments received on the application are available for inspection in the Region III office, from 8 a.m. to 4:30 p.m., Monday through Friday, excluding legal holidays. The docket is located at the Environmental Protection Agency, Region III, Waste and Chemicals Management Division, Toxics Programs and Enforcement Branch (3WC33), 1650 Arch St., Philadelphia, PA.

Electronic comments can be sent directly to EPA at:

johnson.artencia@epa.gov

Electronic comments must be submitted as an ASCII file avoiding the use of special characters and any form of encryption. Comments and data will also be accepted on disks in WordPerfect 5.1/6.1 or ASCII file format. All comments and data in electronic form must be identified by the docket control number ''PB–402404–WV.'' Electronic comments on this document may be filed online at many Federal Depository Libraries. Information claimed as CBI should not be submitted electronically.

Commenters are encouraged to structure their comments so as not to contain information for which CBI claims would be made. However, any information claimed as CBI must be marked ''confidential,'' ''CBI,'' or with some other appropriate designation, and a commenter submitting such information must also prepare a nonconfidential version (in duplicate) that can be placed in the public record. Any information so marked will be handled in accordance with the procedures contained in 40 CFR part 2. Comments and information not claimed as CBI at the time of submission will be placed in the public record.

V. Regulatory Assessment Requirements

A. Certain Acts and Executive Orders

EPA's actions on State or Tribal lead-based paint activities program applications are informal adjudications, not rules. Therefore, the requirements of the Regulatory Flexibility Act (RFA, 5 U.S.C. 601 *et seq.*), Executive Order 12866 (Regulatory Planning and Review, 58 FR 51735, October 4, 1993), and Executive Order 13045 (Protection of Children from Environmental Health Risks and Safety Risks, 62 FR 1985, April 23, 1997), do not apply to this action. This action does not contain any Federal mandates, and therefore is not subject to the requirements of the Unfunded Mandates Reform Act (2 U.S.C.1531–1538). In addition, this action does not contain any information collection requirements and therefore does not require review or approval by the Office of Management and Budget (OMB) under the Paperwork Reduction Act (44 U.S.C. 3501 *et seq.*).

B. Executive Order 12875

Under Executive Order 12875, entitled, *Enhancing Intergovernmental Partnerships* (58 FR 58093, October 28, 1993), EPA may not issue a regulation that is not required by statute and that creates a mandate upon a State, local or Tribal government, unless the Federal government provides the funds necessary to pay the direct compliance costs incurred by those governments. If the mandate is unfunded, EPA must provide to OMB a description of the extent of EPA's prior consultation with representatives of affected State, local, and Tribal governments, the nature of their concerns, copies of any written communications from the governments, and a statement supporting the need to issue the regulation. In addition, Executive Order 12875 requires EPA to develop an effective process permitting elected officials and other representatives of State, local, and Tribal governments ''to provide meaningful and timely input in the development of regulatory proposals containing significant mandates.''

Today's action does not create an unfunded Federal mandate on State, local, or Tribal governments. This action does not impose any enforceable duties on these entities. Accordingly, the requirements of section 1(a) of Executive Order 12875 do not apply to this action.

C. Executive Order 13084

Under Executive Order 13084, entitled, *Consultation and Coordination with Indian Tribal Governments* (63 FR 27655, May 19, 1998), EPA may not issue a regulation that is not required by statute and that significantly or uniquely effects the communities of Indian tribal governments, and that imposes substantial direct compliance costs on those communities, unless the Federal government provides the funds necessary to pay the direct compliance costs incurred by the Tribal governments. If the mandate is unfunded, EPA must provide OMB, in a separately identified section of the preamble to the rule, a description of the extent of EPA's prior consultation with representatives of affected Tribal governments, a summary of the nature of their concerns, and a statement supporting the need to issue the regulation. In addition, Executive Order 13084 requires EPA to develop an effective process permitting elected and other representatives of Indian tribal

governments ''to provide meaningful and timely input in the development of regulatory policies on matters that significantly or uniquely affect their communities.''

Today's action does not significantly or uniquely affect the communities of Indian tribal governments. This action does not involve or impose requirements that affect Indian Tribes. Accordingly, the requirements of section 3(b) of Executive Order 13084 do not apply to this action.

Authority: 15 U.S.C. 2682, 2684.

List of Subjects

Environmental protection, Hazardous substances, Lead, Reporting and recordkeeping requirements.

Dated: March 23, 1999.

W. Michael McCabe,

Regional Administrator, Region III.

[FR Doc. 99–8087 Filed 3–31–99; 8:45 am]

BILLING CODE 6560–50–F

ENVIRONMENTAL PROTECTION AGENCY

[FRL–6313–6]

Proposed National Pollutant Discharge Elimination System (NPDES) General Permit for Reverse Osmosis Desalinization Facilities in Saipan, NPDES # MPG450000

AGENCY: Environmental Protection Agency (EPA).

ACTION: Notice of proposed NPDES General Permit for Reverse Osmosis Desalinization Facilities in Saipan.

SUMMARY: The Reverse Osmosis units are designed to remove dissolved solids from the water in order to provide potable water to the hotels. The source water may be brackish groundwater or seawater. The waste stream contains concentrated levels of total dissolved solids (TDS). Periodically, the filters are cleaned by backwashing or by adding chemicals to raise and lower the pH (from 2 to 12).

Due to the similarities between the discharges, a general permit is being proposed to cover all current and future discharges from hotel RO units meeting certain criteria (see permit).

PUBLIC COMMENT: If you need additional information, you may contact Mike Lee between the hours of 9:00 a.m. until 4:00 p.m. by calling (415) 744–1484 or by writing to: CWA Standards and Permits Office, Attn: Mike Lee (CMD–1), 75 Hawthorne Street, San Francisco, CA 94105–3901.

All comments upon or objections to the PROPOSED PERMIT and requests for a PUBLIC HEARING, pursuant to 40 CFR 124.12, must be transmitted or delivered in writing to Mike Lee, at the address shown above, within 30 days of the date of this notice. An extension of the 30 day comment period may be granted if the request for an extension adequately explains why more time is required to prepare comments.

A final decision to set the conditions and to issue the permit, or to deny the permit, shall be made after all comments have been considered: Notice of the final decisions shall be sent to each person who has transmitted or delivered written comments or requested notice of the final permit decisions. The decisions will become effective 30 days from the date of issuance unless:

1. A later effective date is specified in the decisions; or

2. An evidentiary hearing is requested pursuant to 40 CFR 124.74; or

3. There are no comments requesting a change to the PROPOSED PERMIT, in which case the final decisions shall become effective immediately upon issuance.

SUPPLEMENTARY INFORMATION:

I. Description of Facilities

There are approximately eight hotels in Saipan at this time that discharge or intend to discharge wastewater from a reverse osmosis water treatment unit(s) into waters of the U.S. Each discharges less than 0.5 MGD and into receiving water named Saipan Lagoon, either directly, or through a storm water conveyance channel.

II. Applicable Water Quality Standards

Water Quality Standards for the Commonwealth of the Northern Mariana Islands were adopted on January 20, 1997. The standards classify Garapan lagoon as a Class AA marine water. Under the CNMI Water Quality Standards, ''It is the objective of this class that these waters remain in their natural pristine state as nearly as possible with an absolute minimum of pollution or alteration of water quality from any human-caused source or actions. To the extent practicable, the wilderness character of such areas shall be protected. No zone of mixing will be permitted.''

Discharge in compliance with this NPDES permit should ensure achievement of all applicable Water Quality Standards. These Standards are designed to prevent degradation of water quality. Therefore, compliance with this NPDES permit should prevent any ''unreasonable degradation'' of the marine environment, and in accordance with section 403(c) of the Clean Water Act an NPDES permit may be issued.

III. Effluent limitations

Discharges from desalination processes are not subject to any effective EPA effluent limitations guidelines. Therefore, permit requirements were established using Best Professional Judgment (BPJ) and specific water quality standards in order to ensure protection of the beneficial uses of the receiving waters.

A. pH

The pH is limited in the permit between 6.5 and 8.6 standard units, based on water quality standards for Class AA waters. According to literature submitted by an applicant, the RO units are routinely cleaned by the addition of certain chemicals in order to raise and lower the pH from 2 to 12.

B. Formaldehyde

Some permit applications indicates that formalin (formaldehyde 37%) will be used for cleaning the R/O unit. Formaldehyde is a carcinogen, and its discharge into waters of the U.S. is prohibited.

C. Sodium Hexametaphosphate

Some permit applications indicate that Sodium Hexametaphosphate will also be used in the process. Data searches for toxicity of Sodium Hexametaphosphate performed on the Hazardous Substances Data Base suggest that ''metaphosphates are toxic probably because of their excess alkalinity rather than from simple NA excess.'' (Venugopal, B. and T.D. Luckey, Metal Toxicity in Mammals, New York, Plenum Press, 1978, pg. 11). Wastewater with high alkalinity should have no adverse effect once mixed with seawater unless the pH is very high. For this reason, monitoring for pH is required and a limit for pH is in the permit. Furthermore, a limit for total phosphorous is included, based on the Saipan Water Quality Standards.

D. TDS

TDS testing is required in order to insure that the water quality standard of ''no permanent change in isohaline patterns of the receiving water'' is met. This data may be used for future modeling studies. There is no limit set at this time. Typically, discharges are around 50,000 mg/l.

F. Total Nitrogen, Sulfide (Undissociated), Ammonia (Un-ionized)

Data from existing reverse osmosis desalinization plants in Saipan indicate exceedances of the water quality

standards for these three pollutants. Limits will therefore be included in the permit.

G. Turbidity

The limit for turbidity, <2 NTU, is derived from CNMI water quality standards.

H. Ammonia

The limit for un-ionized ammonia, .02 mg/l, is derived from CNMI water quality standards.

I. Priority Pollutant Scan

If the source water is contaminated, the concentrated waste water will likely be even more so. For this reason, a priority pollutant scan of the wastewater is required within the first six months of obtaining general permit coverage and once every time the location of the source water changes.

J. Whole Effluent Toxicity Testing

At this time, no bioassays are required. However, the permit may be modified in the future to require WET testing.

IV. Monitoring Frequency

The permittee is required to monitor at the frequency specified in the permit. In addition, the permittee is required to monitor everytime the units are cleaned due to the possibility of increased pollutant loading during such periods.

V. Application Requirements

Permittees meeting the requirements specified in the permit may submit a notice of intent (NOI) which includes the required information. A NOI must be submitted at least 60 days prior to intended discharge and again at least 90 days prior to the expiration of this permit. EPA, upon reviewing the information submitted, will decide either to include the applicant under the general permit or to issue the applicant an individual permit. The applicant may assume coverage by the general permit if EPA does not respond within 60 days.

VII. Effects on Endangered Species

EPA believes that discharge in compliance with this permit will have no effect on endangered species. Endangered species in Saipan which could be impacted would be the green and hawksbill sea turtles. At the present time there has been no critical habitat designated for these species in Saipan Lagoon. Furthermore, discharges allowed under this permit may not be placed so that effluent directly impacts seagrass beds or live coral reef habitat, as these habitats are important to these species of sea turtles.

VIII. Economic Impact (Executive Order 12866)

Under Executive Order 12866 (58 FR 51735 (October 4, 1993)), the Agency must determine whether the regulatory action is ''significant'' and therefore subject to OMB review and the requirements of the Executive Order. The Order defines ''significant regulatory action'' as one that is likely to result in a rule that may have an annual effect on the economy of $100 million or more or adversely affect in a material way the economy, a sector of the economy, productivity, competition, jobs, the environment, public health or safety, or State, local, or tribal governments or communities; create a serious inconsistency or otherwise interfere with an action taken or planned by another agency; materially alter the budgetary impact of entitlements, grants, user fees, or loan programs or the rights and obligations of recipients thereof; or raise novel legal or policy issues arising out of legal mandates, the President's priorities, or the principles set forth in the Executive Order.

EPA has determined that this proposed general permit is not a ''significant regulatory action'' under the terms of Executive Order 12866 and is therefore not subject to formal OMB review prior to proposal.

IX. Unfunded Mandates Reform Act

Section 201 of the Unfunded Mandates Reform Act (UMRA), Pub. L. 104–4, generally requires Federal agencies to assess the effects of their ''regulatory actions'' on State, local, and tribal governments and the private sector. UMRA uses the term ''regulatory actions'' to refer to regulations. (*See*, e.g., UMRA section 201, ''Each agency shall * * * assess the effects of Federal regulatory actions * * * (other than to the extent that such regulations incorporate requirements specifically set forth in law)''). UMRA section 102 defines ''regulation'' by reference to section 658 of Title 2 of the U.S. Code, which in turn defines ''regulation'' and ''rule'' by reference to section 601(2) of the Regulatory Flexibility Act (RFA). That section of the RFA defines ''rule'' as ''any rule for which the agency publishes a notice of proposed rulemaking pursuant to section 553(b) of [the Administrative Procedure Act (APA)], or any other law * * *''

As discussed in the RFA section of this notice, NPDES general permits are not ''rules'' under the APA and thus not subject to the APA requirement to publish a notice of proposed rulemaking. NPDES general permits are also not subject to such a requirement under the Clean Water Act (CWA). While EPA publishes a notice to solicit public comment on draft general permits, it does so pursuant to the CWA section 402(a) requirement to provide ''an opportunity for a hearing.'' Thus, NPDES general permits are not ''rules'' for RFA or UMRA purposes.

EPA has determined that the proposed general permit for Saipan does not contain a Federal requirement that may result in expenditures of $100 million or more for State, local and tribal governments, in the aggregate, or the private sector in any one year.

The Agency also believes that the proposed general permit will not significantly nor uniquely affect small governments. For UMRA purposes, ''small governments'' is defined by reference to the definition of ''small governmental jurisdiction'' under the RFA. (*See* UMRA section 102(1), referencing 2 U.S.C. 658, which references section 601(5) of the RFA.) ''Small governmental jurisdiction'' means governments of cities, counties, towns, etc., with a population of less than 50,000, unless the agency establishes an alternative definition.

The proposed general permit also will not uniquely affect small governments because compliance with the permit conditions affects small governments in the same manner as any other entities seeking coverage under the proposed general permit.

X. Paperwork Reduction Act

EPA has reviewed the requirements imposed on regulated facilities resulting from the proposed general permit under the Paperwork Reduction Act of 1980, 44 U.S.C. 3501 *et seq.* The information collection requirements of the proposed general permit have already been approved in previous submissions made for the NPDES permit program under the provisions of the CWA.

XI. Regulatory Flexibility Act

Under the Regulatory Flexibility Act, 5 U.S.C. 601 *et seq.*, EPA is required to prepare a Regulatory Flexibility Analysis to assess the impact of rules on small entities. Under 5 U.S.C. 605(b), no Regulatory Flexibility Analysis is required where the head of the Agency certifies that the rule will not have a significant economic impact on a substantial number of small entities.

The Agency takes the position that NPDES general permits are not subject to rulemaking requirements under APA section 553 or any other law. The requirements of APA section 553 apply only to the issuance of ''rules,'' which the APA defines in a manner that

excludes permits. *See* APA section 551(4), (6) and (8). The CWA also does not require publication of a general notice of proposed rulemaking for general permits. EPA publishes draft general NPDES permits for public comment in the **Federal Register** in order to meet the applicable CWA procedural requirement to provide ''an opportunity for a hearing.'' *See* CWA section 402(a), 33 U.S.C. 1342(a).

Nevertheless, the Agency has considered the potential impact of the proposed general permit on small entities in a manner that meets the requirements of the RFA. Specifically, EPA has analyzed the potential impact of the proposed general permit on small entities and determined that the permit will not have a significant economic impact on a substantial number of small entities. The permit requirements have been designed to minimize significant administrative and economic impacts on small entities and should not have a significant impact on regulated sources in general. Moreover, the proposed general permit reduces a significant burden on regulated sources of applying for individual permits.

XII. Signature

Accordingly, I hereby find consistent with the provisions of the Regulatory Flexibility Act, that this proposed general permit will not have a significant impact on a substantial number of small entities. Authority: Clean Water Act, 33 U.S.C. 1251 *et seq.*

For the Regional Administrator.

Dated: February 22, 1999.

Michael G. Schulz,

Acting Director, Water Division, Region 9.

Authorization To Discharge Under the National Pollutant Discharge Elimination System General Permit for the Discharge of Reverse Osmosis Waste Water Into Marine Waters of the CNMI, NPDES #MPG450000

In compliance with the provisions of the Clean Water Act, as amended, (33 U.S.C. 1251 et seq., the ''Act''), and with the Federal Regulations at 40 CFR 122.28, EPA issues a general permit to cover discharge of reverse osmosis wastewater from facilities located in the CNMI meeting the following criteria:

1. Facility operates a reverse osmosis (RO) unit or units designed specifically for the production of potable water; and
2. Discharge from individual RO unit is less than 0.5 million gallons per day (MGD); and
3. Discharge reaches marine surface waters (i.e. directly, through a stormwater conveyance channel, or through an injection well that may mix with marine surface waters); and
4. An individual 401 Water Quality Certification has been obtained from The Division of Environmental Quality, Commonwealth of the Northern Mariana Islands, which certifies that the discharge will not cause or contribute to violations of water quality standards, or impact seagrass beds or coral reef habitat.

If facility meets the above criteria, the facility may apply for coverage under the general permit by submitting a complete Notice of Intent (NOI) at least 90 days prior to the planned date of discharge. The NOI must include the following:

1. Completed NPDES application Forms 1 and Form 2C. If previously applied, please send any updated information/changes to application;
2. A cover letter indicating that the permittee is seeking coverage under this general permit, has read this general permit and will comply with all its conditions;
3. Individual Water Quality Certification from Division of Environmental Quality under Section 401 of the Act;
4. A list of all chemicals used (both generic name and chemical names) both during typical water treatment and during cleaning of units;
5. Name(s), location(s) and average Total Dissolved Solids of source waters; and
6. Description and location of monitoring stations(s).

The NOI must be submitted to USEPA and Commonwealth of Northern Marianas Islands at the addresses listed under section 3 of this permit.

Sixty (60) days after receipt of NOI by EPA, the applicant may discharge in accordance with conditions of this general permit and the individual 401 certification unless otherwise notified by EPA or CNMI DEQ. EPA reserves the right to deny the general permit to anyone at anytime and require coverage under an individual permit. Furthermore, in accordance with 122.28(b), this permit may be modified, revoked and reissued, or terminated in accordance with applicable requirements of part 124.

Permittees must submit another NOI 90 days prior to the expiration date of this general permit if the permittee intends to continue discharging beyond that date.

The discharge must be in accordance with effluent limitations, monitoring requirements and other conditions set forth herein, in the 401 certification, and in the attached EPA Region 9 ''Standard Federal NPDES Permit Conditions.''

This permit and the authorization to discharge shall expire at midnight five years after effective date.

1. Effluent Limits and Monitoring Requirements

a. Effluent shall be sampled at the point of discharge, prior to mixing with the receiving water. If discharge occurs into a stormwater conveyance channel or pipe, monitoring shall be performed before discharge into the channel or pipe. Monitoring shall be performed during the regular discharge of brine water and during the intermittent discharge of cleaning waste water. [1] During the discharge of brine water, monitoring will be performed at the frequency specified below. During the discharge of cleaning waste water, monitoring shall be performed every time cleaning waste water is discharged. Samples of cleaning waste water should be identical in characteristics to that which is discharged to the surface water. For example, if cleaning waste water is stored or mixed with brine waste water prior to discharge in order to reduce toxicity, samples should be taken of the stored or mixed effluent.

Such discharges shall be limited and monitored by the permittee as specified below:

Effluent characteristics	Limitations	Monitoring requirements	
	Daily max.	Measurement frequency [1]	Sample type
Flow		Continuous	N/A
Total Dissolved Solids		Once/Quarter	Discrete.
Total Nitrogen	0.4 mg/l	Once/Month	Discrete.

[1] Cleaning waste water includes backwash water or any other waste water with different chemical characteristics than the normal brackish reject water.

Effluent characteristics	Limitations	Monitoring requirements	
	Daily max.	Measurement frequency [1]	Sample type
Total Phosphorous	0.025 mg/l	Once/Month	Discrete.
Sulfide (undissociated)	0.002 mg/l	Once/Month	Discrete.
Ammonia (unionized)	0.02 mg/l	Once/Month	Discrete.
Turbidity	Not > 2 NTU	Once/Month	Discrete.
Total Residual Chlorine [2]	.01 mg/l	Once/Day	Discrete.
Priority Pollutant Scan		([3])	Discrete.
pH	([4])	Once/Day	Discrete.

[1] The frequency specified below applies only to the discharge of brine water. Monitoring shall be performed once/discharge during the discharge of cleaning waste water.
[2] Monitoring required only if products containing chlorine are used. Non-detects shall be considered compliance.
[3] Permittee shall conduct priority pollutant scans on the effluent (both the cleaning waste water and the brine water discharge) once within the first 6 months of general permit and again every time location of source water changes.
[4] (4) The pH of the effluent is limited between 6.5 and 8.6 standard units at all times.

b. The discharge shall be free of substances attributable to domestic, industrial, or other controllable sources of pollutants and shall be capable of supporting desirable aquatic life and be suitable for recreation in and on the water.

c. The discharge shall not cause floating debris, oils, grease, scum, or other floating materials.

d. The discharge shall be free from substances in amounts sufficient to produce taste or odor in the water or detectable off flavor in the flesh of fish, or in amounts sufficient to produce objectionable odor, turbidity, or other conditions in the receiving waters.

e. There shall be no discharge of cleaning wastes, biocides, pathogenic organisms, toxic, radioactive, corrosive, or other deleterious substances at levels or in combinations sufficient to be toxic or harmful to human, animal, plant or aquatic life, or in amounts sufficient to interfere with any beneficial use of the water.

f. There shall be no discharge of substances or conditions or combinations thereof in concentrations which produce undesirable aquatic life.

g. The discharge shall not cause the temperature of the receiving water to vary by more than 1.5°F (0.9°C) from ambient conditions.

h. The discharge shall not cause the dissolved oxygen level in the receiving water to drop below 6.0 mg/l.

i. The discharge shall not cause a change in channels, basic geometry or fresh water influx which would cause permanent changes in isohaline patterns of more than 10% from the natural conditions or which would otherwise adversely affect the indigenous biota and natural sedimentary patterns.

j. The use of products containing formaldehyde is prohibited.

2. Additional Conditions

a. The permittee shall also comply with all requirements included under their individual 401 certification.

b. If CNMI or USEPA believes, based on monitoring data, facility inspections, or receiving water quality that a permittee's discharge is, or may be causing or contributing to exceedances of water quality criteria, or in any way impacting seagrass beds or live coral reef habitat, USEPA may require the facility to obtain an individual permit. An individual permit may include additional, or more stringent effluent limitations, additional effluent and/or receiving water monitoring, including whole effluent toxicity testing and/or dye/tracer studies to determine the extent (if any) of the impacts.

3. Reporting and Monitoring

a. Reporting of Monitoring Results

Monitoring results obtained during the previous 3 months shall be summarized for each month and submitted on forms to be supplied by the Regional Administrator, to the extent that the information reported may be entered on the forms. The results of all monitoring required by this permit shall be submitted in such a format as to allow direct comparison with the limitations and requirements of this permit. Unless otherwise specified, discharge flows and pH shall be reported in terms of the average value over each 30-day period and the maximum recorded value over that 30-day period. Monitoring reports shall submitted on a quarterly basis and be postmarked no later than the 28th day of the month following the completed reporting period. The first report is due thirty days after the effective date of this permit. Duplicate signed copies of these, and all other reports required herein, shall be submitted to the Regional Administrator and the Commonwealth at the following addresses:

Regional Administrator, Environmental Protection Agency, Attention: CMD–1, 75 Hawthorne Street, San Francisco, CA 94105

Director, Div. of Environmental Quality, P.O. Box 1304, Saipan, MP 96950.

b. Twenty-Four Hour Reporting of Noncompliance

The permittee shall report any noncompliance which may endanger health or the environment. Any information shall be provided orally within 24 hours from the time the permittee becomes aware of the circumstances to the following person or their office: Director, Div. of Environmental Quality 670/664–8500 or 664–8501.

If the permittee is unsuccessful in contacting the person above, he/she shall report by 9 a.m. on the first business day following the noncompliance. A written submission shall also be provided within 5 days of the time the permittee becomes aware of the circumstances. The written submission shall contain a description of the noncompliance and its cause; the period of noncompliance, including dates and times, and, if the noncompliance has not been corrected, the anticipated time it is expected to continue; and steps taken or planned to reduce, eliminate, and prevent reoccurrence of the noncompliance.

c. Definitions

1. A ''discrete'' sample means any individual sample collected in less than 15 minutes. A ''discrete'' sample for enteric virus means any individual sample collected in less than 3 hours.

2. The ''daily maximum'' concentration means the measurement made on any single discrete sample or composite sample.

d. Monitoring Modification

Monitoring, analytical, and reporting requirements may be modified by the

Regional Administrator upon due notice.

4. EPA Region 9 Standard Conditions (Not Included)

[FR Doc. 99–7770 Filed 3–31–99; 8:45 am]

BILLING CODE 6560–50–P

EXPORT-IMPORT BANK OF THE UNITED STATES

Notice of Open Special Meeting of the Sub-Saharan African Advisory Committee of the Export-Import Bank of the United States (Export-Import Bank)

SUMMARY: The Sub-Saharan African Advisory Committee was established by Pub. L. 105–121, November 26, 1997, to advise the Board of Directors on the development and implementation of policies and programs designed to support the expansion of the Bank's financial commitments in Sub-Saharan Africa under the loan, guarantee and insurance programs of the Bank. Further, the committee shall make recommendations on how the Bank can facilitate greater support by U.S. commercial banks for trade with Sub-Saharan Africa.

TIME AND PLACE: Wednesday, April 21, 1999, at 9:30 a.m. to 12:00 noon. The meeting will be held at the Export-Import Bank in Room 1143, 811 Vermont Avenue, NW, Washington, DC 20571.

AGENDA: This meeting will include a discussion of the development and implementation of policies and programs designated to support the expansion of Ex-Im Bank's Financial commitments in Sub-Saharan Africa. The discussion will focus on analysis of competitive barriers to increased trade in Sub-Saharan Africa based on information gathered from other ECA's, exporters and banks.

PUBLIC PARTICIPATION: The meeting will be open to public participation, and the last 10 minutes will be set aside for oral questions or comments. Members of the public may also file written statement(s) before or after the meeting. If any person wishes auxiliary aids (such as a sign language interpreter) or other special accommodations, please contact, prior to April 14, 1999, Teri Stumpf, Room 1203, Vermont Avenue, NW, Washington, DC 20571, Voice: (202) 565–3502 or TDD (202) 565–3377.

FOR FURTHER INFORMATION CONTACT: Teri Stumpf, Room 1203, 811 Vermont Ave., NW, Washington, DC 20571, (202) 565–3502.

Elaine Stangland,

Acting General Counsel.

[FR Doc. 99–7867 Filed 3–31–99; 8:45 am]

BILLING CODE 6690–01–M

FEDERAL COMMUNICATIONS COMMISSION

Notice of Public Information Collections Being Reviewed by the Federal Communications Commission

March 25, 1999.

SUMMARY: The Federal Communications Commissions, as part of its continuing effort to reduce paperwork burden invites the general public and other Federal agencies to take this opportunity to comment on the following information collection, as required by the Paperwork Reduction Act of 1995, Public Law 104–13. An agency may not conduct or sponsor a collection of information unless it displays a currently valid control number. No person shall be subject to any penalty for failing to comply with a collection of information subject to the Paperwork Reduction Act (PRA) that does not display a valid control number. Comments are requested concerning (a) whether the proposed collection of information is necessary for the proper performance of the functions of the Commission, including whether the information shall have practical utility; (b) the accuracy of the Commission's burden estimate; (c) ways to enhance the quality, utility, and clarity of the information collected; and (d) ways to minimize the burden of the collection of information on the respondents, including the use of automated collection techniques or other forms of information technology.

DATES: Written comments should be submitted on or before June 1, 1999. If you anticipate that you will be submitting comments, but find it difficult to do so within the period of time allowed by this notice, you should advise the contact listed below as soon as possible.

ADDRESSES: Direct all comments to Les Smith, Federal Communications Commission, 445 12th Street, SW, Room 1–A804, Washington, DC 20554 or via the Internet to lesmith@fcc.gov.

FOR FURTHER INFORMATION CONTACT: For additional information or copies of the information collections contact Les Smith at (202) 418–0217 or via the Internet at lesmith@fcc.gov.

SUPPLEMENTARY INFORMATION:

OMB Control Number: 3060–0236.

Title: Section 74.703, Interference.

Form Number: N/A.

Type of Review: Extension of currently approved collection.

Respondents: Business or other for-profit entities.

Number of Respondents: 10.

Estimated Time per Response: 2 hours.

Frequency of Response: On occasion reporting requirements.

Total Annual Burden: 20.

Total Annual Costs: $12,000.

Needs and Uses: Section 74.703(f) requires licensees of low power TV or TV translator stations causing interference to other stations to submit a report to the FCC detailing the nature of interference, source of interfering signals, and remedial steps taken to eliminate the interference. This report is to be submitted after operation of the station has resumed. The data are used by FCC staff to determine that the licensee has eliminated all interference caused by operation of their station.

OMB Control Number: 3060–0248.

Title: Section 74.751, Modification of Transmission Systems.

Form Number: N/A.

Type of Review: Extension of currently approved collection.

Respondents: Business or other for-profit entities.

Number of Respondents: 400.

Estimated Time Per Response: 0.5 hours.

Frequency of Response: Recordkeeping; on occasion reporting requirement.

Total annual burden: 200 hours.

Total annual costs: None.

Needs and Uses: Section 74.751(c) requires licensees of low power TV or TV translator stations to send written notification to the FCC of equipment changes which may be made at licensee's discretion without the use of a formal application. Section 74.751(d) requires that licensees of low power TV or TV translator stations place in the station records a certification that the installation of new or replacement transmitting equipment complies in all respects with the technical requirements of this section and the station authorization. The notifications and certifications of equipment changes are used by FCC staff to assure that the equipment changes made are in full compliance with the technical requirements of this section and the station authorizations and will not cause interference to other authorized stations.

Federal Communications Commission.

Magalie Roman Salas,

Secretary.

[FR Doc. 99–8042 Filed 3–31–99; 8:45 am]

BILLING CODE 6712–01–P

FEDERAL COMMUNICATIONS COMMISSION

Notice of Public Information Collection(s) being Reviewed by the Federal Communications Commission.

March 24, 1999.

SUMMARY: The Federal Communications Commissions, as part of its continuing effort to reduce paperwork burden invites the general public and other Federal agencies to take this opportunity to comment on the following information collection, as required by the Paperwork Reduction Act of 1995, Public Law 104–13. An agency may not conduct or sponsor a collection of information unless it displays a currently valid control number. No person shall be subject to any penalty for failing to comply with a collection of information subject to the Paperwork Reduction Act (PRA) that does not display a valid control number. Comments are requested concerning (a) whether the proposed collection of information is necessary for the proper performance of the functions of the Commission, including whether the information shall have practical utility; (b) the accuracy of the Commission's burden estimate; (c) ways to enhance the quality, utility, and clarity of the information collected; and (d) ways to minimize the burden of the collection of information on the respondents, including the use of automated collection techniques or other forms of information technology.

DATES: Written comments should be submitted on or before June 1, 1999. If you anticipate that you will be submitting comments, but find it difficult to do so within the period of time allowed by this notice, you should advise the contact listed below as soon as possible.

ADDRESSES: Direct all comments to Les Smith, Federal Communications Commission, Room 1–A804, 445 12th Street, S.W., Washington, DC 20554 or via the Internet to lesmith@fcc.gov.

FOR FURTHER INFORMATION CONTACT: For additional information or copies of the information collections contact Les Smith at (202) 418–0217 or via the Internet at lesmith@fcc.gov.

SUPPLEMENTARY INFORMATION:

OMB Control Number: 3060–0878.

Title: Wireless Telecommunications Bureau Outlines Guidelines For Wireless E911 Rule Waivers For Handset-Based Approaches To Phase II Automatic Location Identification (ALI) Requirements, Public Notice, CC Docket No. 94–102.

Form Number: N/A.

Type of Review: New collection.

Respondents: Business or other for-profit entities.

Number of Respondents: 50.

Estimated Time per Response: 4 hours.

Frequency of Response: One time filing requirement.

Total Annual Burden: 200 hours.

Total Annual Costs: None.

Needs and Uses: The information filed as part of a petition for waiver will be used to ensure timely compliance with the Commission's E911 regulations, provide the Commission with current information on the status of ALI technology, and thus ensure the dependability and responsiveness of critical E911 services.

Federal Communications Commission.

Magalie Roman Salas,

Secretary.

[FR Doc. 99–8043 Filed 3–31–99; 8:45 am]

BILLING CODE 6717–01–P

FEDERAL COMMUNICATIONS COMMISSION

Public Information Collections Approved by Office of Management and Budget

March 26, 1999.

The Federal Communications Commission (FCC) has received Office of Management and Budget (OMB) approval for the following public information collections pursuant to the Paperwork Reduction Act of 1995, Public Law 104–13. An agency may not conduct or sponsor and a person is not required to respond to a collection of information unless it displays a currently valid control number. For further information contact Shoko B. Hair, Federal Communications Commission, (202) 418–1379.

The Commission has received OMB approval for the following ARMIS reports. ARMIS was implemented to facilitate the timely and efficient analysis of the carriers' operating costs and the appropriate revenue requirements, rates of return and price caps; to provide an improved basis for audits and other oversight functions; and to enhance the Commission's ability to quantify the effects of alternative policy. The following reports were revised to implement recent Commission orders, to clarify definitions and descriptions and to improve understanding of existing requirements. For copies of the procedures and formats for the ARMIS reports, please call Barbara Van Hagen at 202–418–0849. Copies of the procedures and formats may also be obtained via the internet at: http://www.fcc.gov/ccb/armis.

Federal Communications Commission

OMB Control No.: 3060–0395.

Expiration Date: 03/31/2002.

Title: The ARMIS USOA Report; The ARMIS Service Quality Report; and The ARMIS Infrastructure Report.

Form No.: FCC Report Nos. 43–02, 43–05, 43–07.

Respondents: Business or other for profit.

Estimated Annual Burden: 50 respondents; 1252.7 hours per response (avg.); 62,637 total annual burden hours.

Estimated Annual Reporting and Recordkeeping Cost Burden: $0.

Frequency of Response: Annual.

Description: FCC Report 43–02 contains company-wide data for each account specified in the Uniform System of Accounts (''USOA''). It provides the annual operating results of the carriers' activities for every account in the USOA. (FCC Report 43–02 has 50 respondents, 960 hours per response (avg), 48,000 total annual hours). FCC Report 43–05 collects data at the study area and holding company levels and is designed to capture trends in service quality under price cap regulation. It provides service quality information in the areas of interexchange access service installation and repair intervals, local service installation and repair intervals, trunk blockage and total switch downtime for price cap companies. (FCC Report 43–05 has 12 respondents, 849 hours per response (avg), 10,197.4 total annual hours). FCC Report 43–07 is designed to capture trends in telephone industry infrastructure development under price cap regulation. It provides switch deployment and capabilities data. (FCC Report 43–07 has 8 respondents, 555 hours per response (avg), 4,400 total annual hours). Obligation to respond: Mandatory.

OMB Control No.: 3060–0496.

Expiration Date: 03/31/2002.

Title: The ARMIS Operating Data Report.

Form No.: FCC Report 43–08.

Respondents: Business or other for profit.

Estimated Annual Burden: 50. respondents; 160 hours per response (avg.); 8,000 total annual burden hours.

Estimated Annual Reporting and Recordkeeping Cost Burden: $0.

Frequency of Response: Annual.

Description: The ARMIS Operating Data Report consists of statistical schedules which are needed by the Commission to monitor network growth, usage, and reliability. Obligation to respond: Mandatory.

OMB Control No.: 3060–0511.

Expiration Date: 03/31/2002.

Title: ARMIS Access Report

Form No.: FCC Report 43–04.

Respondents: Business or other for profit.

Estimated Annual Burden: 150. respondents; 1,150 hours per response (avg.); 172,500 total annual burden hours.

Estimated Annual Reporting and Recordkeeping Cost Burden: $0.

Frequency of Response: Annual.

Description: The Access Report is needed to administer the results of the FCC's jurisdictional separations and access charge procedures in order to analyze revenue requirements, joint cost allocations, jurisdictional separations and access charges. Obligation to respond: Mandatory.

OMB Control No.: 3060–0512.

Expiration Date: 03/31/2002.

Title: The ARMIS Annual Summary Report.

Form No.: FCC Report No. 43–01.

Respondents: Business or other for profit.

Estimated Annual Burden: 150. respondents; 220 hours per response (avg.); 33,000 total annual burden hours.

Estimated Annual Reporting and Recordkeeping Cost Burden: $0.

Frequency of Response: Annual.

Description: The ARMIS Annual Summary Report contains financial and operating data and is used to monitor the incumbent local exchange carriers and to perform routine analyses of costs and revenues on behalf of the Commission. Obligation to respond: Mandatory.

OMB Control No.: 3060–0513.

Expiration Date: 03/31/2002.

Title: ARMIS Joint Cost Report.

Form No.: FCC Report 43–03.

Respondents: Business or other for profit.

Estimated Annual Burden: 150. respondents; 200 hours per response (avg.); 30,000 total annual burden hours.

Estimated Annual Reporting and Recordkeeping Cost Burden: $0.

Frequency of Response: Annual.

Description: The Joint Cost Report is needed to administer our Part 64 joint cost rules and to analyze the regulated and nonregulated cost and revenue allocations by study area in order to prevent cross-subsidization of non-regulated operations by the regulated operations. Obligation to respond: Mandatory.

OMB Control No.: 3060–0763

Expiration Date: 03/31/2002

Title: The ARMIS Customer Satisfaction Report

Form No.: FCC Report 43–06

Respondents: Business or other for profit.

Estimated Annual Burden: 8 respondents; 720 hours per response (avg.); 5,760 total annual burden hours.

Estimated Annual Reporting and Recordkeeping Cost Burden: $0.

Frequency of Response: Annual.

Description: The Customer Satisfaction Report collects data from carrier surveys designed to capture trends in service quality. Obligation to respond: Mandatory.

Public reporting burden for the collections of information is as noted above. Send comments regarding the burden estimate or any other aspect of the collections of information, including suggestions for reducing the burden to Performance Evaluation and Records Management, Washington, DC 20554.

Federal Communications Commission.

Magalie Roman Salas,

Secretary.

[FR Doc. 99–8088 Filed 3–31–99; 8:45 am]

BILLING CODE 6712–01–P

FEDERAL COMMUNICATIONS COMMISSION

[WTB Docket No. 98–181; FCC 98–252]

License Revocation, Monetary Forfeiture, and License Application Proceedings

AGENCY: Federal Communications Commission.

ACTION: Notice.

SUMMARY: This order initiates license revocation and monetary forfeiture proceedings against the Norcom Communications Corporation (''Norcom''), the Association for East End Land Mobile Coverage (''East End''); the LMR 900 Association of Suffolk (''LMR 900''); the Metro NY LMR Association (''Metro'') the NY LMR Association (''NY''); and the Wireless Communications Association of Suffolk (''Suffolk''). In addition, the action designates three license applications filed by Norcom for hearing. The order sets forth the following issues: to determine whether Norcom, East End, LMR 900, Metro, NY and/or Suffolk violated Section 310(d) of the Communications Act, 47 U.S.C. 310(b), by engaging in unauthorized transfers of control of Stations WPAT918, WNXT323, WPAZ643, WPAP734, and/or WPAT910; to determine whether Norcom, East End, LMR 900, Metro, NY and/or Suffolk violated section 90.179(f) of the Commission's rules, 47 CFR 90.179(f), by operating Stations WPAT918, WNXT323, WPAZ643, WPAP734, and/or WPAT910 on a for-profit basis; to determine whether Norcom has abused the Commission's processes in connection with the creation and/or control of the Associations and/or with the control and/or operation of the Associations' stations; to determine, in light of the evidence adduced pursuant to the foregoing issues, whether Norcom, East End, LMR 900, Metro, NY and/or Suffolk are basically qualified to be Commission licensees; to determine, in light of the evidence adduced pursuant to the preceding issues, whether the captioned licenses should be revoked; and to determine, in light of the evidence adduced pursuant to the preceding issues, whether the captioned applications should be granted. The actions taken by the order are authorized by sections 309(e), 312(a)(2), 312(a)(4), 312(c) and 503(b)(3)(A) of the Communications Act, 47 U.S.C. 309(e), 312(a)(2), 312(a)(4), 312(c), and 503(b)(3)(A), and section 1.227 of the Commission's rules, 47 CFR 1.227.

FOR FURTHER INFORMATION CONTACT: Thomas D. Fitz-Gibbon, Federal Communications Commission, Wireless Telecommunications Bureau, Enforcement and Consumer Information Division, 445 12th Street, SW, Room 3–C431, Washington, DC, 20554, (202) 418–0693.

Federal Communications Commission.

Magalie Roman Salas,

Secretary.

[FR Doc. 99–8040 Filed 3–31–99; 8:45 am]

BILLING CODE 6712–01–P

FEDERAL COMMUNICATIONS COMMISSION

[Report No. 2323]

Petitions for Reconsideration and Clarification of Action in Rulemaking Proceedings

March 25, 1999.

Petitions for Reconsideration have been filed in the Commission's rulemaking proceedings listed in this Public Notice and published pursuant to 47 CFR Section 1.429(e). The full text of these documents are available for viewing and copying in Room 239, 1919 M Street, N.W., Washington, D.C. or may be purchased from the Commission's copy contractor, ITS, Inc. (202) 857–3800. Oppositions to these petitions must be filed by April 16,

1999. See Section 1.4(b)(1) of the Commission's rules (47 CFR 1.4(b)(1). Replies to an opposition must be filed within 10 days after the time for filing oppositions has expired.

Subject: Provision of Aeronautical Services via the Inmarsat System via the Inmarsat System;

Provision of Aeronautical Services via the Inmarsat System Order on Reconsideration and Further Notice of Proposed Rulemaking (CC Docket No. 87–75);

Provision of Aeronautical Services via the Inmarsat System Notice of Proposed Rulemaking.

Number of Petitions Filed: 1.

Subject: 1998 Biennial Regulatory Review—Amendment of Part 2, 25 and 68 of the Commission's Rules to Further Streamline the Equipment Authorization Process for Radio Frequency Equipment, Modify the Equipment Authorization Process for Telephone Terminal Equipment, Implement Mutual Recognition Agreements and Begin Implementation of the Global Mobile Personal Communications by Satellite (GMPCS) Arrangements (GEN Docket No. 98–68).

Number of Petitions Filed: 1.

Subject: Satellite Delivery of Network Signals to Unserved Households for Purposes of the Satellite Home Viewer Act (CS Docket No. 98–201, RM No. 9335, 9345);

Part 73 Definition and Measurement of Signals of Grade B Intensity.

Number of Petitions Filed: 2.

Subject: Policy and Rules Concerning the Interstate Interexchange Marketplace (CC Docket No. 96–61);

Implementation of Section 254(g) of the Communications Act of 1934, as Amended.

Number of Petitions Filed: 1.

Subject: 1998 Biennial Regulatory Review—part 76 Cable Television Service Pleading and Complaint Rules (CS Docket No. 98–54);

Number of Petitions Filed: 1.

Subject: Allocation of Spectrum Below 5 GHz Transferred from Federal Government Use (ET Docket No. 94–32).

Number of Petitions Filed: 1.

Federal Communications Commission.

Magalie Roman Salas,

Secretary.

[FR Doc. 99–8041 Filed 3–31–99; 8:45 am]

BILLING CODE 6712–01–M

FEDERAL DEPOSIT INSURANCE CORPORATION

Agency Information Collection Activities: Proposed Collection; Comment Request

AGENCY: Federal Deposit Insurance Corporation (FDIC).

ACTION: Notice and request for comment.

SUMMARY: The FDIC, as part of its continuing effort to reduce paperwork and respondent burden, invites the general public and other Federal agencies to take this opportunity to comment on proposed and/or continuing information collections, as required by the Paperwork Reduction Act of 1995 (44 U.S.C. chapter 35). Currently, the FDIC is soliciting comments concerning an information collection titled ''Uniform Application/Uniform Termination for Municipal Securities Principal or Representative.''

DATES: Comments must be submitted on or before June 1, 1999.

ADDRESSES: Interested parties are invited to submit written comments to Tamara R. Manly, Management Analyst (Regulatory Analysis), (202) 898–7453, Office of the Executive Secretary, Room 4058, Attention: Comments/OES, Federal Deposit Insurance Corporation, 550 17th Street NW, Washington, DC 20429. All comments should refer to ''Uniform Application/Uniform Termination for Municipal Securities Principal or Representative.'' Comments may be hand-delivered to the guard station at the rear of the 17th Street Building (located on F Street), on business days between 7:00 a.m. and 5:00 p.m. [FAX number (202) 898–3838; Internet address: comments@fdic.gov].

A copy of the comments may also be submitted to the OMB desk officer for the FDIC: Alexander Hunt, Office of Information and Regulatory Affairs, Office of Management and Budget, New Executive Office Building, Room 3208, Washington, DC 20503.

FOR FURTHER INFORMATION CONTACT: Tamara R. Manly, at the address identified above.

SUPPLEMENTARY INFORMATION:

Proposal to Renew the Following Currently Approved Collection of Information

Title: Uniform Application/Uniform Termination for Municipal Securities Principal or Representative.

OMB Number: 3064–0022.

Frequency of Response: Occasional.

Affected Public: Insured state nonmember banks serving as municipal securities dealers.

Estimated Number of Respondents: 75.

Estimated Time per Response: 1 hour.

Estimated Total Annual Burden: 75 hours.

General Description of Collection: An insured state nonmember bank which serves as a municipal securities dealer must file Form MSD–4 or Form MSD–5, as applicable, to permit an employee to become associated or to terminate the association with the municipal securities dealer. FDIC uses the form to ensure compliance with the professional requirements for municipal securities dealers in accordance with the rules of the Municipal Securities Rulemaking Board.

Request for Comment

Comments are invited on: (a) Whether the collection of information is necessary for the proper performance of the FDIC's functions, including whether the information has practical utility; (b) the accuracy of the estimates of the burden of the information collection, including the validity of the methodology and assumptions used; (c) ways to enhance the quality, utility, and clarity of the information to be collected; and (d) ways to minimize the burden of the information collection on respondents, including through the use of automated collection techniques or other forms of information technology.

At the end of the comment period, the comments and recommendations received will be analyzed to determine the extent to which the collection should be modified prior to submission to OMB for review and approval. Comments submitted in response to this notice also will be summarized or included in the FDIC's requests to OMB for renewal of this collection. All comments will become a matter of public record.

Dated at Washington, D.C., this 26th day of March, 1999.

Federal Deposit Insurance Corporation.

Robert E. Feldman,

Executive Secretary,

[FR Doc. 99–7952 Filed 3–31–99; 8:45 am]

BILLING CODE 6714–01–P

FEDERAL DEPOSIT INSURANCE CORPORATION

Agency Information Collection Activities: Proposed Collection; Comment Request

AGENCY: Federal Deposit Insurance Corporation (FDIC).

ACTION: Notice and request for comment.

SUMMARY: The FDIC, as part of its continuing effort to reduce paperwork and respondent burden, invites the general public and other Federal agencies to take this opportunity to comment on proposed and/or continuing information collections, as required by the Paperwork Reduction Act of 1995 (44 U.S.C. chapter 35). Currently, the FDIC is soliciting comments concerning an information collection titled ''Deregistration from Registered Transfer Agents.''

DATES: Comments must be submitted on or before June 1, 1999.

ADDRESSES: Interested parties are invited to submit written comments to Tamara R. Manly, Management Analyst (Regulatory Analysis), (202) 898–7453, Office of the Executive Secretary, Room 4058, Attention: Comments/OES, Federal Deposit Insurance Corporation, 550 17th Street NW., Washington, DC 20429. All comments should refer to ''Deregistration from Registered Transfer Agents.'' Comments may be hand-delivered to the guard station at the rear of the 17th Street Building (located on F Street), on business days between 7:00 a.m. and 5:00 p.m. [FAX number (202) 898–3838; Internet address: comments@fdic.gov].

A copy of the comments may also be submitted to the OMB desk officer for the FDIC: Alexander Hunt, Office of Information and Regulatory Affairs, Office of Management and Budget, New Executive Office Building, Room 3208, Washington, DC 20503.

FOR FURTHER INFORMATION CONTACT: Tamara R. Manly, at the address identified above.

SUPPLEMENTARY INFORMATION:

Proposal To Renew the Following Currently Approved Collection of Information

Title: Deregistration from Registered Transfer Agents.

OMB Number: 3064–0027.

Frequency of Response: Occasional.

Affected Public: Registered transfer agents who wish to withdraw from registration.

Estimated Number of Respondents: 29.

Estimated Time per Response: 0.42 hours.

Estimated Total Annual Burden: 12 hours.

General Description of Collection: An insured nonmember bank that functions as a transfer agent may withdraw from registration as a transfer agent by filing a written notice of withdrawal with the FDIC as provided by 12 CFR 341.5.

Request for Comment

Comments are invited on: (a) Whether the collection of information is necessary for the proper performance of the FDIC's functions, including whether the information has practical utility; (b) the accuracy of the estimates of the burden of the information collection, including the validity of the methodology and assumptions used; (c) ways to enhance the quality, utility, and clarity of the information to be collected; and (d) ways to minimize the burden of the information collection on respondents, including through the use of automated collection techniques or other forms of information technology.

At the end of the comment period, the comments and recommendations received will be analyzed to determine the extent to which the collection should be modified prior to submission to OMB for review and approval. Comments submitted in response to this notice also will be summarized or included in the FDIC's requests to OMB for renewal of this collection. All comments will become a matter of public record.

Dated at Washington, D.C., this 26th day of March, 1999.

Federal Deposit Insurance Corporation.

Robert E. Feldman,

Executive Secretary.

[FR Doc. 99–7953 Filed 3–31–99; 8:45 am]

BILLING CODE 6714–01–P

FEDERAL DEPOSIT INSURANCE CORPORATION

Agency Information Collection Activities: Proposed Collection; Comment Request

AGENCY: Federal Deposit Insurance Corporation (FDIC).

ACTION: Notice and request for comment.

SUMMARY: The FDIC, as part of its continuing effort to reduce paperwork and respondent burden, invites the general public and other Federal agencies to take this opportunity to comment on proposed and/or continuing information collections, as required by the Paperwork Reduction Act of 1995 (44 U.S.C. chapter 35). Currently, the FDIC is soliciting comments concerning an information collection titled ''Prompt Corrective Action.''

DATES: Comments must be submitted on or before June 1, 1999.

ADDRESSES: Interested parties are invited to submit written comments to Tamara R. Manly, Management Analyst (Regulatory Analysis), (202) 898–7453, Office of the Executive Secretary, Room 4058, Attention: Comments/OES, Federal Deposit Insurance Corporation, 550 17th Street NW, Washington, DC 20429. All comments should refer to ''Prompt Corrective Action.'' Comments may be hand-delivered to the guard station at the rear of the 17th Street Building (located on F Street), on business days between 7:00 a.m. and 5:00 p.m. [FAX number (202) 898–3838; Internet address: comments@fdic.gov].

A copy of the comments may also be submitted to the OMB desk officer for the FDIC: Alexander Hunt, Office of Information and Regulatory Affairs, Office of Management and Budget, New Executive Office Building, Room 3208, Washington, DC 20503.

FOR FURTHER INFORMATION CONTACT: Tamara R. Manly, at the address identified above.

SUPPLEMENTARY INFORMATION:

Proposal to Renew the Following Currently Approved Collection of Information

Title: Prompt Corrective Action.

OMB Number: 3064–0115.

Frequency of Response: Occasional.

Affected Public: Insured institutions requiring federal banking agency supervisory actions.

Estimated Number of Respondents: 10.

Estimated Time per Response: 4 hours.

Estimated Total Annual Burden: 40 hours.

General Description of Collection: The prompt corrective action provisions of FDICIA require or permit the FDIC and other federal financial regulators to take certain supervisory actions when FDIC-insured institutions fall within one of five categories. The collection consists of applications required to obtain FDIC exceptions to otherwise restricted activities.

Request for Comment

Comments are invited on: (a) Whether the collection of information is necessary for the proper performance of the FDIC's functions, including whether the information has practical utility; (b) the accuracy of the estimates of the burden of the information collection, including the validity of the methodology and assumptions used; (c) ways to enhance the quality, utility, and clarity of the information to be collected; and (d) ways to minimize the burden of the information collection on respondents, including through the use of automated collection techniques or other forms of information technology.

At the end of the comment period, the comments and recommendations

received will be analyzed to determine the extent to which the collection should be modified prior to submission to OMB for review and approval. Comments submitted in response to this notice also will be summarized or included in the FDIC's requests to OMB for renewal of this collection. All comments will become a matter of public record.

Dated at Washington, D.C., this 26th day of March, 1999.

Federal Deposit Insurance Corporation

Robert E. Feldman,

Executive Secretary.

[FR Doc. 99–7954 Filed 3–31–99; 8:45 am]

BILLING CODE 6714–01–M

FEDERAL MARITIME COMMISSION

Notice of Agreements, Filed, etc.

The Commission gives notice that it has requested that the parties to the below listed agreement provide additional information pursuant to section 6(d) of the Shipping Act of 1984, 46 U.S.C. app. §§ 1701 *et seq.* The Commission has determined that further information is necessary to evaluate the impact of the proposed agreement. This action prevents the agreement from becoming effective as originally scheduled.

Agreement No.: 202–011650.
Title: North Atlantic Agreement.
Parties:

A.P. Moller-Maersk Line
APL Limited
Atlantic Cargo Services
Atlantic Container Line AB
China Ocean Shipping (Group) Co.
DSR-Senator Lines
Hanjin Shipping Co., Ltd.
Hapag-Lloyd Container Line GmbH
Hyundai Merchant Marine Co., Ltd.
Independent Container Line Europe NV
Kawasaki Kisen Kaisha, Ltd.
Lykes Lines Limited
Mediterranean Shipping Co., S.A.
Mexican Line Limited
Nippon Yusen Kaisha
Orient Overseas Container Line, Inc.
POL-Atlantic
P&O Nedlloyd Limited
Sea-Land Service, Inc.
Yangming Marine Transport Corp.

Dated: March 26, 1999.

By Order of the Federal Maritime Commission.

Bryant L. VanBrakle,

Secretary.

[FR Doc. 99–7951 Filed 3–31–99; 8:45 am]

BILLING CODE 6730–01–M

DEPARTMENT OF HEALTH AND HUMAN SERVICES

Office of the Secretary, Assistant Secretary for Planning and Evaluation

Notice Inviting Applications for New Award for Fiscal Year 1999

AGENCY: The Office of the Assistant Secretary for Planning and Evaluation (ASPE), DHHS.

ACTION: Announcement of the availability of funds and request for applications from States and large counties to determine the status of applicants and potential applicants to the Temporary Assistance to Needy Families (TANF) program, individuals and families entering the TANF caseload, and individuals and families who leave TANF.

SUMMARY: The Office of the Assistant Secretary for Planning and Evaluation (ASPE) announces the availability of funds and invites applications for research into the status of applicants and potential applicants to the Temporary Assistance to Needy Families (TANF) program, individuals and families entering the TANF caseload, and individuals and families who leave TANF. Approximately four to six States or large counties will receive funding that will enable them to monitor and conduct research into the progress of individuals who apply for TANF benefits and their families. ASPE is particularly interested in targeting those applicants who apply for cash assistance but are never enrolled because of non-financial eligibility requirements, participation in up-front job search or other diversion programs, or failure to complete the application process. Proposed studies of new entrants onto the TANF program and of individuals leaving welfare also will be given consideration. Research topics could fall into the broad categories of employment and earnings, participation in government assistance programs, and child and family well-being. Grant applicants may choose any method for their proposed studies, including the linking of administrative data, surveys, or other methods as appropriate. The funds could either support a newly designed project or could be used to add new data sources and analyses to an existing project.

CLOSING DATE: The deadline for submission of applications under this announcement is May 17, 1999.

MAILING ADDRESS: Application instructions and forms should be requested from and submitted to: Adrienne Little, Grants Officer, Office of the Assistant Secretary for Planning and Evaluation, Department of Health and Human Services, Room 405F, Hubert H. Humphrey Building, 200 Independence Avenue, SW, Washington, DC 20201. Telephone: (202) 690–8794. Requests for forms and administrative questions will be accepted and responded to up to ten (10) working days prior to the closing date.

Copies of this program announcement and many of the required forms may also be obtained electronically at the ASPE World Wide Web Page: *http://aspe.hhs.gov*. You may fax your request to the attention of the Grants Officer at (202) 690–6518. Applications may not be faxed or submitted electronically.

The printed **Federal Register** notice is the only official program announcement. Although reasonable efforts are taken to assure that the files on the ASPE World Wide Web Page containing electronic copies of this program announcement are accurate and complete, they are provided for information only. The applicant bears sole responsibility to assure that the copy downloaded and/or printed from any other source is accurate and complete.

FOR FURTHER INFORMATION CONTACT: Administrative questions should be directed to the Grants Officer at the address or phone number listed above. Technical questions should be directed to Matthew Lyon, Office of the Assistant Secretary for Planning and Evaluation, Department of Health and Human Services, Room 404E, Hubert H. Humphrey Building, 200 Independence Avenue, SW, Washington, DC 20201. Telephone: (202) 401–3953. Questions may be faxed to (202) 690–6562 or e-mailed to *mlyon@osaspe.dhhs.gov*.

Part I. Supplemental Information

Legislative Authority

This grant is authorized by section 1110 of the Social Security Act (42 U.S.C. 1310) and awards will be made from funds appropriated under Pub.L. 105–277, Department of Health and Human Services Appropriations Act, 1999.

Eligible Applicants

Given the nature of the research involved, competition is open only to State agencies that administer TANF programs and to counties with total populations greater than 500,000 that administer TANF programs. Consortia of States and counties are also encouraged to apply, as long as their combined total populations exceed 500,000 and a single agency is identified as the lead to handle grant funds and

sub-granting. Public or private nonprofit organizations, including universities and other institutions of higher education, may collaborate with States in submitting an application, but the principal Grantee will be the State. Private for-profit organizations may also apply jointly with States, with the recognition that grant funds may not be paid as profit to any recipient of a grant or subgrant.

The Code of Federal Regulations, Title 45, Part 92 defines a State as: ''Any of the several States of the United States, the District of Columbia, the Commonwealth of Puerto Rico, any territory or possession of the United States, or any agency or instrumentality of a State exclusive of local governments. The term does not include any public and Indian housing agency under United States Housing Act of 1937.''

Available Funds

Approximately $1,200,000 is available from ASPE, in funds appropriated for fiscal year 1999. ASPE anticipates providing approximately four to six awards of between $200,000 and $250,000 each. If additional funding becomes available in fiscal years 1999 or 2000, further projects may be funded or some projects may receive second year funding. However, applications for funding under this announcement should describe projects that can be completely carried out with one year of funding at the above anticipated level.

Background

Welfare caseloads have declined precipitously in recent years. Since January 1993, the number of people receiving federally funded assistance under Title IV–A of the Social Security Act has fallen from 14.1 million to just under 8 million recipients, a reduction of 44 percent. This decline has occurred in response to the Administration's grants of Federal waivers to 43 States, the provisions of the Personal Responsibility and Work Opportunity Reconciliation Act of 1996 (Pub.L. 104–193), and the strong economy. In response to the demand from the public and policymakers, many studies have been and are currently being carried out to study the circumstances of the large numbers of people who have left welfare. There has been less attention, however, to applicants and potential applicants to TANF, some of whom are formally or informally diverted from receiving cash assistance.

ASPE is interested in focusing on applicants and potential applicants to TANF for a number of reasons. First, some of the reduction in the welfare rolls has likely been caused by the reduced number of individuals and families applying for and enrolling in TANF. Little is known about the economic and employment status of applicants who are diverted from receiving assistance by new policies or procedures, or the well-being of their children and families. Moreover, the Department of Health and Human Services has a particular policy interest in learning about the degree to which TANF applicants are aware of their potential eligibility for Medicaid and other programs and services that are important in helping families make a successful transition to work. The extent to which low-income families diverted from or leaving cash welfare programs are receiving health insurance from private or public sources should also inform efforts to reduce the number of uninsured families.

The studies funded under this announcement build on previous ASPE-sponsored data-linkage and research projects to study the outcomes of welfare reform. These include projects involving linking of administrative data, research on state diversion programs, and an earlier round of grants to States and large counties to study the outcomes of welfare reform.

In FY 1996 and 1997, ASPE awarded grants to five States and one county for the purpose of linking administrative databases from multiple programs in order to study the interactions between programs and the use of multiple sources of assistance by recipients. As a result of this funding, the Grantees have significantly increased their ability to conduct research using administrative data.

In FY 1997, ASPE and the Administration for Children and Families (ACF) sponsored a study by the Center for Health Policy Research at The George Washington University to examine State diversion policies and practices and the potential effects of formal and informal TANF diversion programs on recipients and on participation in other government programs, particularly Medicaid. The study found that States are using three major methods to formally divert applicants from entering cash assistance: lump sum payment programs, mandatory applicant job search, and policies encouraging the use of alternative resources. In addition, some potential applicants are informally diverted, or discouraged from applying for TANF at all by strict expectations placed on recipients. Both the interim report, released in August 1998, and the final report, to be released in March 1999, raise questions about whether TANF diversion policies may reduce access to Medicaid for many low-income individuals who may be unaware of their eligibility for Medicaid under Section 1931 of the Social Security Act. The final report also stresses the need to gather more information about the population diverted from TANF and other public assistance programs.

Finally, the projects funded on this announcement will build closely on the ongoing ASPE-funded grants to study welfare outcomes. In FY 1998, ASPE awarded approximately $2.9 million in grants to study the outcomes of welfare reform on individuals and families who leave the TANF program, who apply for cash welfare but are never enrolled because of non-financial eligibility requirements or diversion programs, and/or who appear to be eligible but are not enrolled. These grants were funded by money earmarked by Congress for crosscutting research on the outcomes of welfare reform and interagency transfers from the Department of Agriculture, the Department of Labor, and the Administration for Children and Families.

Grants were awarded to ten States (including the District of Columbia), two counties, and one consortium of counties under the FY 1998 announcement. In addition, a grant was made to South Carolina under a different program announcement to conduct a similar study tracking welfare families. Families leaving welfare are being studied by all fourteen of the FY 1998 welfare outcome Grantees—Arizona, District of Columbia, Florida, Georgia, Illinois, Massachusetts, Missouri, New York, South Carolina, Washington, Wisconsin, Los Angeles County in California, Cuyahoga County in Ohio, and a consortium of three contiguous counties in the Bay Area of California (San Mateo, Santa Cruz, and Santa Clara). Research topics vary among Grantees, but include: employment and earnings, other income supports, health insurance, child care, child well-being, barriers to self-sufficiency, insecurity/deprivation, and other topics. In addition, five of the fourteen Grantees (Florida, South Carolina, Washington, Wisconsin, and the San Mateo County consortia) are including analysis of individuals who have been formally or informally diverted from receiving welfare.

The Wisconsin study, for example, includes an applicant diversion study undertaken by the Institute for Research on Poverty (IRP) at the University of Wisconsin-Madison. HHS funding has allowed IRP to expand a study of individuals applying for Wisconsin

Works (W–2) assistance in Milwaukee. The project focuses on three subgroups of applicants: (1) Those who request assistance and subsequently participate in the W–2 program; (2) those who request assistance but are determined to be ineligible for program participation; and, (3) those who request assistance, appear to be eligible, but do not participate in W–2. A six-month cohort of applicants is being tracked through a combination of linked administrative data (e..g, public assistance, quarterly earnings, child support, foster care, and mental health data) and two waves of surveys. In order to address the difficult issue of identifying and surveying individuals who never enroll in the program and thus may not be regularly entered in the state public assistance administrative database, IRP researchers are approaching individuals on the day that they apply for cash assistance, immediately after they have been screened for potential welfare eligibility and before they meet with employment specialists. By conducting in-person interviews with applicants while they are still in the welfare office, IRP hopes to achieve a response rate of 90 percent for the first wave of interviews and gather sufficient information to be able to locate respondents for a follow-up interview twelve months later. Analysis of the applicants will take place across a variety of sub-topics, including the local welfare office, respondent demographics, welfare status over the twelve months, prior welfare receipt, and receipt of any support services.

The study of applicants in San Mateo County, California, differs somewhat from the IRP study. San Mateo County is able to take advantage of California's Case Data System (CDS), which includes every TANF application that is initiated in the state. Researchers in San Mateo County and at the SPHERE Institute in Palo Alto are using this system both to link all applicants with other administrative databases and to draw their survey sample. Because the Case Data System includes all applications, and not just those individuals who received TANF, San Mateo County can study individuals who began the application process but were diverted, as well as individuals who leave TANF. The work plan calls for administrative data linkage and a two-wave survey, administered at six and twelve months after ''case closure'' (when either the applicant withdraws from the application process or the TANF recipient leaves the program).

Another approach to studying diversion is being taken in Florida, South Carolina, and Washington. In addition to studying individuals who complete their applications for welfare but do not enroll in the program, each of these states is using Food Stamps and/or Medicaid enrollment data to identify those individuals and their families that appear to be eligible for cash assistance but are not enrolled in TANF. These individuals will be tracked through administrative databases or, in some cases, studied through a combination of administrative data and surveys.

As stated above, all fourteen welfare outcomes Grantees receiving FY 1998 funding are analyzing families that leave the TANF program. Each of the ''leavers'' studies includes at least two cohorts: one for which administrative data is retrieved and the other for which the Grantee compiles both administrative and survey data. The most common administrative data sets being used are public assistance data (TANF, Medicaid, Food Stamps, etc.) and wage data (usually Unemployment Insurance). Several of the Grantees also are using child welfare, child support, child care, JOBS or JOBS successor, and other human services data sets.

To supplement the information gathered through data linking, all 1998 Grantees are surveying at least one cohort of leavers. Most surveys are mixed mode (telephone interviews with an in-person follow-up when necessary), and most of the Grantees have acknowledged that a response rate of at least 70 to 80 percent is needed to avoid potential biases of their studies' results. Grantees are each developing their own survey instruments, generally drawing items from national surveys developed by the Census Bureau (e.g., the Survey of Income and Program Participation (SIPP), the Survey of Program Dynamics (SPD), the Food Insecurity Module used on the Current Population Survey (CPS)), other national surveys, existing state instruments (e.g., a survey used in an early South Carolina study of welfare leavers), and items developed by their own researchers. Variation across the Grantees exists in terms of the timing of cohorts, administrative data sets, and survey instruments. However, the Grantees have come to agreement on certain issues, including a common definition of ''leavers'' as individuals who leave cash assistance for a period of two months or longer.

Part II. Purpose and Responsibilities

Purpose

The purpose of this announcement is to support the efforts of States and large counties to research the circumstances of applicants and potential applicants to the Temporary Assistance to Needy Families (TANF) program, individuals and families entering the TANF caseload, and individuals and families who leave TANF. ASPE is committed to using the research funds appropriated by Congress to help build state and local capacity to conduct studies of the outcomes of welfare reform. Through these grants, ASPE hopes to support State efforts to gather a variety of information about the above individuals and their families, including their economic and non-economic well-being and participation in government programs.

More specifically, ASPE hopes to learn what happens to families who apply for welfare but are formally or informally diverted before enrollment. How are such families faring economically and in other measures of well-being? To what extent are such families still participating in Medicaid, Food Stamp, and child support programs (and if not, why not)? Similar questions can be asked about individuals and families who have left TANF. Finally, a study of TANF entrants provides still another perspective from which to analyze the outcomes of welfare reform.

A proposed study should include at least one cohort of applicants/potential applicants (with an emphasis on those formally or informally diverted from receiving cash assistance), entrants, or leavers. The Grantee has the option of studying just one of these types of populations, or of studying two or more. However, preference will be given to those Grantees that include a study of applicants and potential applicants to TANF, including diverted individuals and families.

The Grantee should clearly identify how the study population is defined. For example, applicants and potential applicants could include one or more of the following groups, as defined by the Grantee:

- individuals participating in a State or county's formal diversion program (lump-sum payment, mandatory applicant job search, and/or alternative resources),
- individuals that begin the application process but fail to complete it,
- individuals that complete the process and are determined to be eligible for cash assistance, but who withdraw from the program before receiving any benefits, and
- individuals who apply for cash assistance but are determined to be ineligible based on non-financial requirements.

Grantees studying individuals and families that leave TANF are encouraged to use the ''leaving cash assistance for two months or longer'' definition being used by the fourteen grantees funded in 1998. Grantees studying families that enter TANF should clearly define that population, and should explain how they will study the experiences of welfare entrants while they are enrolled in the TANF program.

Each Grantee will be expected to use administrative records from multiple programs and/or other data-gathering techniques to identify and conduct research into the experiences of the study population (as defined by the Grantee) over time. For example, applicants and potential applicants could be tracked through the application process, after eligibility is determined, and in subsequent months; former recipients and their families could be monitored after the point of closure; and entrants onto TANF could be studied throughout their participation in the program. An administrative data analysis could be enhanced through the use of retrospective data (i.e., prior welfare receipt, employment history), as well as data on characteristics at the time of cohort identification (point of application, case entry, or case closure) and over subsequent months.

Applicants for the ASPE grants may propose to augment their administrative data by linking individual records with survey data or other data sources. For example, surveys of applicants and those that have been diverted from applying can determine the individual's perceptions of the application process and reasoning for participating or not participating in different benefit programs. The combination of linked administrative data sets and surveys provide researchers with the answers to a wide range of research questions. Another possible enrichment of the data might involve providing contextual information by briefly documenting or describing the application process facing TANF applicants in the county or State studied (or the case closure procedures, if appropriate). This might include the role of the TANF agency in ensuring that applicants for cash assistance are enrolled into the Medicaid, Food Stamps, and Child Support Enforcement programs, where appropriate. The richness of the data the Grantee is able to provide will be an important criterion under which proposals are evaluated.

Studies of applicants, entrants, and leavers will benefit from tracking individuals and families over time. To this end, applicants may submit proposals for studies lasting up to seventeen months from the date the grant is awarded. While ASPE will obligate funds for studies as lengthy as seventeen months, proposals that allot this maximum time period will receive no preference over shorter studies, including those that last the conventional twelve months. If additional funding becomes available in fiscal year 2000, some projects may be considered for second year funding, allowing for an even longer time frame.

ASPE understands that there is a great degree of variation in State programs, and in the amount and scope of data available to states. Grantees also will vary in their identification of a study population and in the types of subgroup analyses that can be conducted. Subgroup analyses contrasting different types of diverted cases (e.g., participants in formal diversion programs, nonparticipating eligible individuals and families, and those that are non-financially ineligible), different types of closed cases (e.g., because of earnings, sanctions, time limits), and special populations (e.g., the disabled, substance abusers) are of interest. ASPE also has a strong interest in studying urban and rural subgroups. Comparisons across other demographic characteristics, including race and age and number of children, would also be helpful.

Topical areas that applicants may wish to address, with examples of potential policy questions, are listed below, grouped in three general categories for ease of presentation. Given the diversity of expected proposals, it is highly unlikely that every applicant would be able to address all of the issues and policy questions. Further, while the list represents the topics that are most important to ASPE researchers and policymakers, the suggested questions are in no way meant to be exhaustive. However, we would expect that applicants for funding will cover each of these three broad areas in their applications. If prospective applicants have additional questions which they feel are relevant within the context of welfare reform, they are encouraged to raise them in their proposal. Please note that though many of the questions focus on TANF applicants and potential applicants, they may be suggestive of similar issues that could be investigated in studies that focus on TANF entrants or individuals and families that leave the TANF program. Again, richness of data is strongly encouraged and will be an important criterion under which proposals are evaluated.

1. Employment and Economic Well-being

- Employment and earnings: What is the employment status of individuals at time of application for welfare? At time of case closure? Six to twelve months later? What types of jobs are held? What level of wages do they receive and how much do they receive in total earnings? What sort of work schedules do they have? What, if any, employer-provided fringe benefits and training are available to them, including health insurance? What fringe benefits do they and their family members actually receive? If applicants/entrants/leavers are not employed, why not? What was the cause of the most recent job loss? How long between job loss and application for welfare?
- Household income: What is total household income? Does this income fall below the poverty threshold? Are there earnings or other income from other members of the applicant's household? What are the sources of this income? Do they include disability payments? What financial support do they receive from extended family members or friends that live outside of the household?
- Child support: Do families have child support orders? Do they receive regular child support payments? If so, what proportion of family income does child support income represent? Is there evidence that the non-custodial parent provides some financial support, including in-kind goods and services, even if there is no ''formal'' child support?
- Barriers to self-sufficiency: Do applicants appear to face any barriers to employment, including disability, illiteracy, limited English proficiency, domestic violence, mental illness, or substance abuse? Are barriers to employment identified at time of application and do they influence the applicants' placement or ability to participate in an up-front job search or other component to a work-based approach to welfare (see also Child care section below)?

2. Participation in Government Programs

- TANF: What types of families are placed in formal diversion programs and for what reason? What types of families are eligible but do not enroll? What families are enrolled? Are there differences in the experiences of single and two-parent families? What are patterns of prior receipt for TANF applicants? For individuals leaving TANF, what are the reasons for closure (as identified in case records and

reported by recipient)? How many families return to welfare, when, and why? For individuals entering TANF, what is their experience while receiving cash assistance? What services are they receiving, and how has their participation in the TANF program affected their ability to become self-sufficient?

- Medicaid and other health insurance: Are individuals and/or their children enrolled in Medicaid? To what extent are individuals aware of the eligibility guidelines and application procedures for Medicaid for themselves and/or their children? What information or guidance have they received from the State or local TANF or Medicaid agency? From other agencies or from health providers? Are applications for Medicaid routinely accepted and processed, even as applicants cooperate with work-search requirements to become eligible for TANF? Do adults and children in families have access to other health insurance, and if so, from what source? Are premiums or co-payments required? Are respondents aware of their children's potential eligibility for health coverage under the Children's Health Insurance Plan (CHIP)? Are those that are working aware of how to qualify for potential Transitional Medicaid benefits?
- Food Stamps: Do some or all family members participate in the Food Stamp program? To what extent are individuals aware of their potential eligibility for Food Stamps and of the application procedures? What information or guidance have they received from State or local agencies? Are Food Stamp applications processed, even as applicants cooperate with work-search requirements to become eligible for TANF?
- Child care: What child care arrangements are being used by families when parents are working, seeking work, or in employment and training programs? Does the family make any payments? Does the government or anyone else help pay for the child care? To what extent are families aware of their potential eligibility for child care subsidies and/or transitional child care, and of the application procedures? Did individuals lose any work because of child care problems, or conversely, lose child care due to work requirements? Do individuals require care for their children during non-traditional hours, such as weekends and after-school?
- Child Support Enforcement: Are all families, including those that are diverted from cash assistance, referred to Child Support Enforcement services? How are families that do not receive cash assistance treated by the Child Support Enforcement agency, as compared with TANF families (e.g., application fees, longer processing period, receipt of awards)? Are non-custodial parents being made aware of services that may be available to them?
- SSI and other government programs: Are TANF applicants referred to Supplemental Security Income (SSI)? What happens to applicants during the waiting period between referral and determination of SSI eligibility? To what extent are TANF applicants referred to and/or relying on other government programs, such as Unemployment Insurance, housing subsidies, free or reduced price school meals, WIC, and Head Start? Are applicants also referred to programs run by state and local governments or not-for-profit agencies?
- Attitudes: What are the attitudes of applicants, recipients, and former recipients toward the TANF application process, applicant job search and other diversion programs, TANF, work, and their current situation?

3. Family Well-being

- Food insecurity: Does the family have enough food to eat? Does the family run out of money to buy food? Were any family members forced to turn to food pantries for meals? Did any adults in the family skip meals? Did any children?
- Health insecurity: What is the health status of each family member? Do they have difficulties accessing health care? Did family members not get care or postpone getting care when they needed it for financial reasons? Has the family been forced to access emergency services, and if so, have they been able to obtain the needed assistance?
- Housing insecurity: Have families been forced to double-up or move in with relatives? Does the family run out of money to pay the rent? Have they been evicted or recently experienced periods of homelessness? Have families stayed in homeless shelters for any period of time?
- Family support: To what extent do individuals turn to extended family members, friends, and informal resource networks for support (including, but not limited to, the financial support discussed in the section relating to economic well-being)? During the application process, are applicants encouraged to seek the support of family members and friends as a potential alternative to welfare?
- Household composition and child living arrangements: How does household composition change over time, and how is this related to entry onto and exit from welfare? Are there changes in marital status? Changes in the number of adults living in the household? Pregnancies and births? Do any children enter or exit from foster care programs? Do children move to and from care between parents, or by relatives other than parents (e.g., informal arrangements, formal kinship care programs, child-only TANF cases)? How often have families moved?
- Child well-being: What are child health status and access to health care (see also Medicaid section above)? How are children faring in school? In child care? To what extent are there signs of positive behaviors/activities or behavior problems? What is the incidence of child abuse or neglect (see also Barriers to self-sufficiency section above)? Are there signs of maternal depression? Is there non-resident parent involvement with the child/children? If so, what types of involvement exist (e.g. amount of contact, participation in school, church, or other community events)?

Grantee Responsibilities

1. Prior to completion of the final work plan, the Grantee shall meet with relevant federal personnel, other Grantees, and invited experts in Washington, D.C., to discuss the preliminary methodology and design of the research project. As part of this process, the Grantees will take part in a joint discussion of their proposed study designs and research questions, and receive technical assistance from ASPE staff. This will allow for knowledge sharing across the various projects, as well as encourage peer-to-peer contacts among each of the Grantees.

2. No later than ninety (90) days after the date of award, the Grantee shall submit an outline of progress to date, if any, and a final work plan that is based on and updates the work plan submitted in the original application.

3. A second meeting may be planned later in the grant period in Washington, D.C., to discuss preliminary findings and the format for the final report (for Grantees outside the Washington, D.C. area, this may take place by telephone).

4. After completing the analysis, the Grantee shall prepare a final report describing the results of the study, including the procedures and methodology used to conduct the analysis, the research questions answered, the knowledge and information gained from the project, and any barriers encountered in completing the project. A draft of this report shall be delivered to the Federal Project Officer no later than thirty (30) days before the completion of the project. After receiving comments on the draft report from the Federal Project Officer,

the Grantee shall deliver at least three (3) copies of a final report to the Grants Officer before the completion of the project. One of these copies must be unbound, suitable for photocopying; if only one is the original (has the original signature, is attached to a cover letter, etc.), it should not be this copy.

5. To encourage wider analysis, the Grantee shall make all data available to the research community. ASPE prefers that this result in a public-use data file. In preparing the public-use data file, data shall be edited as appropriate to ensure confidentiality of individuals. If the applicant feels that provision of a public-use data file is impossible, the application should explain why and should fully articulate how the applicant will make the data available to qualified researchers and to ASPE. In either case, the plan for data dissemination will be evaluated and scored during the evaluation of proposals.

ASPE Responsibilities

1. ASPE shall convene one to two meetings of Grantees, federal personnel, and relevant experts in the areas the Grantees choose to address. The first meeting will allow for technical assistance and peer-to-peer contacts before final research design decisions have been made, and will assure that data constructs meet some standard of validity. A second meeting may be held approximately eight to ten months into the grant period to allow Grantees to meet, discuss and assess their progress to date, and receive assistance with any problems that have arisen.

2. ASPE shall provide consultation and technical assistance in the planning and operation of grant activities.

3. ASPE shall assist in information exchange and the dissemination of reports to appropriate Federal, State, and local entities.

Part III. Application Preparation and Evaluation Criteria

This section contains information on the preparation of applications for submission under this announcement, the forms necessary for submission, and the evaluation criteria under which the applications will be reviewed. Potential grant applicants should read this section carefully in conjunction with the information provided above. The application must contain the required Federal forms, title page, table of contents, and sections listed below. All pages of the narrative should be numbered.

The application should include the following elements:

1. *Abstract:* A one page summary of the proposed project.

2. *Goals and objective of the project:* An overview that describes (1) the project; (2) the specific research questions to be investigated; (3) proposed accomplishments; and (4) knowledge and information to be gained from the project by the applicant, the government, and the research community. If the proposal builds on any current project, the application should describe how funding under this announcement will enhance, not substitute for, current State or local efforts. Applications from States and counties that received funding from ASPE under the FY 1998 welfare outcomes grants are not precluded from submitting proposals under this announcement, provided they are proposing a new line of research, and not simply a continuation or extension of their current project. However, such proposals will be graded only on the Evaluation Criteria listed below and will receive no preferential treatment during the award process.

3. *Methodology and Design:* Provide a description and justification of how the proposed research project will be implemented, including methodologies, chosen approach, definition of study populations, data sources, and a research plan consistent with a descriptive, tabular analysis. The proposed research plan should:

(a) describe in detail how the applicant plans to define the study population, which should include one or more of the following: applicants and potential applicants to the TANF program (with an emphasis on those diverted from receiving cash assistance), individuals and families entering the TANF caseload, and individuals and families who leave TANF. Applications that propose studies of TANF applicants should include a description of the TANF application process in the State or large county to be sampled. This will assist reviewers in understanding when and how the sample population will be chosen.

(b) identify how the proposed data sets and variables will be used by the Grantee to answer each of the research questions described in the proposal.

(c) identify important issues for which data currently are not available, and strategies for dealing with this lack of data when it pertains to the research questions in the proposal.

(d) describe in detail the methodology the applicant will use to extract samples of TANF applicants and potential applicants, individuals and families entering the TANF caseload, and recipients who leave TANF. Grant applicants are encouraged to use a full population sample, but at a minimum, a successful applicant will use a scientifically acceptable probability sampling method in which every sampling unit in the population has a known, non-zero chance to be included in the sample and a sample size large enough to make statistically reliable comparisons between planned subgroups. If, however, the grant applicant proposes to sample applicants and potential applicants that live in certain geographic regions or are subject to a particular set of diversion programs, they may propose a sampling plan that covers only those regions in question.

(e) if administrative data-linking is planned, describe the criteria for the selection of existing data sets, as well as the methods used to clean, standardize and link the case-level data from the different sources. Applicants should discuss thoroughly how they intend to match case records from different data sources, and the internal validity checks that will be used to ensure the accuracy of the matches. The architecture for the resulting data set should also be discussed in detail.

(f) if survey data collection is planned, identify and describe the methodology used to gather survey data. In particular, identify the sampling plan, the survey mode (e.g., telephone, in-person, mail), and the steps that will be taken to address any biases inherent in each. These should include steps planned to ensure a high response rate, such as a mixed mode design, multiple attempts to contact sample members, or incentive payments to respondents, and steps taken to analyze differences between respondents and non-respondents, such as comparisons through linked administrative data. Because of the importance of a high response rate in ensuring reliability, these procedures will be an important part of the evaluation of proposals. In addition, grant applicants are encouraged, but not required, to include a draft of their proposed survey instrument as a supplement to their application.

(g) if qualitative research such as focus groups or a qualitative description of the TANF application, enrollment, and closure policies and procedures are planned, the application should include a complete plan for data collection procedures and analysis. This plan should include an approach for reviewing written documents, identification of key informants, the composition of any proposed focus groups, planned discussion topics, a plan for summarizing and organizing the results, and the value that this part

of the project will add to the final report. The application should demonstrate a familiarity with the difficulties and potential biases of qualitative research, and include plans to avoid or resolve them.

(h) identify the methodology the Grantee will use to analyze the data and organize the final report. Complex data analysis is neither expected nor preferred. Simple tabular analysis and descriptive statistics are appropriate. The description should include subgroup analyses planned, report organization and proposed tabulations, including table shells illustrating how the results will be presented. The application should explain how different data sources (e.g., data from administrative sources, survey data collection, other research) will be synthesized to enhance the proposed analyses.

To the extent that the analysis uses data on individuals from multiple, separate sources, such as administrative databases from several State agencies, the proposal should discuss measures taken to maintain confidentiality, as well as demonstrate that the Grantee has obtained authorized access to those data sources. The preferred form of proof is a signed interagency agreement with each of the relevant agencies/departments. Though not preferable, letters of support from the appropriate agencies are acceptable, provided that the letter clearly states that the proposing agency has the authorization to access and link all necessary data. Grant applicants must assure that the collected data will only be used for management and research purposes, and that all identifying information will be kept completely confidential, and should present the methods that will be used to ensure confidentiality of records and information once data are made available for research purposes.

4. *Experience, capacity, qualifications, and use of staff:* Briefly describe the grant applicant's organizational capabilities and experience in conducting pertinent research projects. If the proposal involves linking administrative databases from multiple programs, the proposal should detail the applicant's experience in conducting projects using linked administrative program data or identify key subcontractors with such experience. If the proposal involves survey work, the proposal should describe the applicant's experience in conducting relevant surveys or identify key subcontractors with such experience. Similarly, if the proposal involves qualitative data collection or analysis, the experience of the applicant or key subcontractors with this type of research and with these populations must be described in detail.

If the grant applicant plans to contract for any of the work (e.g., data-linking, survey design or administration, qualitative analysis), and the contractors have not been retained, the applicant should describe the process by which they will be selected. Identify the key staff who are expected to carry out the project and provide a résumé or curriculum vitae for each person. Provide a discussion of how key staff will contribute to the success of the project, including the percentage of each staff member's time that will be devoted to the project. Finally, applicants should demonstrate access to computer hardware and software for storing and analyzing the data necessary to complete this project.

5. *Work plan:* A work plan should be included which lists the start and end dates of the project, a time line which indicates the sequence of tasks necessary for the completion of the project, and the responsibilities of each of the key staff. The plan should identify the time commitments of key staff members in both absolute and percentage terms, including other projects and teaching or managerial responsibilities. Due to the complicated nature of the study of applicants and potential applicants for welfare, work plans with time lines of twelve to seventeen months will be accepted.

The work plan also should include plans for dissemination of the results of the study (e.g., articles in journals, presentations to State legislatures or at conferences). As noted above, ASPE prefers that the data be edited as appropriate for confidentiality and issued as a public-use data file. The work plan should detail how resulting data and analysis will be made available to qualified researchers and to ASPE. If the grant applicant believes that provision of a public-use file would be impossible, the application should explain why and should fully articulate how the applicant will make the data available to qualified researchers and to ASPE.

6. *Budget:* Grant applicants must submit a request for federal funds using Standard Form 424A and include a detailed breakdown of all Federal line items. A narrative explanation of the budget should be included that states clearly how the funds associated with this announcement will be used and describes the extent to which funds will be used for purposes that would not otherwise be incorporated within the project. The applicant should also document the level of funding from other sources and describe how these funds will be expended.

As noted above, all applicants must budget for two trips to the Washington, D.C., area, for at least two members of the research team. At the first meeting, Grantees will have the opportunity to meet, discuss their projects, and receive feedback from both the other Grantees and from ASPE staff and invited experts. The second meeting will be approximately eight to ten months into the grant period, and will provide Grantees with the ability to meet and discuss their progress to date, and assess and receive technical assistance with any problems that have arisen.

Review Process and Funding Information

Applications will initially be screened for compliance with the timeliness and completeness requirements. Three (3) copies of each application are required. One of these copies must be in an unbound format, suitable for copying. If only one of the copies is the original (i.e., carries the original signature and is accompanied by a cover letter) it should not be this copy. Applicants are encouraged to send an additional two (2) copies to ease processing, but the application will not be penalized if these extra copies are not included. The grant applicant's Standard Form 424 must be signed by a representative of the applicant who is authorized to act with full authority on behalf of the applicant.

A Federal review panel will review and score all applications submitted by the deadline date that meet the screening criteria (all information and documents as required by this announcement). The panel will use the evaluation criteria listed below to score each application. The panel results will be the primary element used by the ASPE when making funding decisions. The Department reserves the option to discuss applications with other Federal or State staff, specialists, experts and the general public. Comments from these sources, along with those of the reviewers, will be kept from inappropriate disclosure and may be considered in making an award decision.

As a result of this competition, between four and six grants of $200,000 to $250,000 each are expected to be made from funds appropriated for fiscal year 1999. Additional awards may be made depending on the policy relevance of proposals received and the available funding, including funds that may become available in fiscal years 1999 or 2000.

Reports

As noted in the Grantee Responsibilities, two substantive reports are required under the grant: a final work plan (due no later than ninety (90) days after the date of award), and a final report containing all results and analysis (draft version due no later than thirty (30) days before the end of the project and final version due at the conclusion of the project).

In addition, Grantees shall provide concise quarterly progress reports. The specific format and content for these reports will be provided by the Federal Project Officer.

State Single Point of Contact (E.O. No. 12372)

DHHS has determined that this program is not subject to Executive Order 12372, ''Intergovernmental Review of Federal Programs.'' Applicants are not required to seek intergovernmental review of their applications within the constraints of E.O. 12372.

Deadline for Submission of Applications

The closing date for submission of applications under this announcement is May 17, 1999. Hand-delivered applications will be accepted Monday through Friday, excluding Federal holidays, during the working hours of 9:00 a.m. to 4:30 p.m. in the lobby of the Hubert H. Humphrey building, located at 200 Independence Avenue, SW in Washington, D.C. When hand-delivering an application, call (202) 690–8794 from the lobby for pick up. A staff person will be available to receive applications.

An application will be considered as having met the deadline if it is either received at, or hand-delivered to, the mailing address on or before May 17, 1999, or postmarked before midnight three days prior to May 17, 1999 and received in time to be considered during the competitive review process (within two weeks of the deadline).

When mailing applications, applicants are strongly advised to obtain a legibly dated receipt from the U.S. Postal Service or from a commercial carrier (such as UPS, Federal Express, etc.) as proof of mailing by the deadline date. If there is a question as to when an application was mailed, applicants will be asked to provide proof of mailing by the deadline date. If proof cannot be provided, the application will not be considered for funding. Private metered postmarks will not be accepted as proof of timely mailing. Applications which do not meet the deadline will be considered late applications and will not be considered or reviewed in the current competition. DHHS will send a letter to this effect to each late applicant.

DHHS reserves the right to extend the deadline for all proposals due to: (1) Natural disasters, such as floods, hurricanes, or earthquakes; (2) a widespread disruption of the mail; or, (3) if DHHS determines a deadline extension to be in the best interest of the Federal government. The Department will not waive or extend the deadline for any applicant unless the deadline is waived or extended for all applicants.

Application forms

Application instructions and forms should be requested from and submitted to: Adrienne Little, Grants Officer, Office of the Assistant Secretary for Planning and Evaluation, Department of Health and Human Services, Room 405F, Hubert H. Humphrey Building, 200 Independence Avenue, SW, Washington, DC 20201. Telephone: (202) 690–8794. Requests for forms and questions (administrative and technical) will be accepted and responded to up to ten (10) working days prior to closing date of receipt of applications.

Copies of this program announcement and many of the required forms may also be obtained electronically at the ASPE World Wide Web Page: *http://aspe.hhs.gov*. You may fax your request to the attention of the Grants Officer at (202) 690–6518. Grant applications may not be faxed or submitted electronically.

The printed **Federal Register** notice is the only official program announcement. Although reasonable efforts are taken to assure that the files on the ASPE World Wide Web Page containing electronic copies of this program announcement are accurate and complete, they are provided for information only. The applicant bears sole responsibility to assure that the copy downloaded and/or printed from any other source is accurate and complete.

Also see section entitled ''Components of a Complete Application.'' All of these documents must accompany the application package.

Length of application

In no case shall an application for the ASPE grant (excluding the résumés, appendices and other appropriate attachments) be longer than thirty (30) single-spaced pages. Applications should not be unduly elaborate, but should fully communicate the applicant's proposal to the reviewers.

Selection process and evaluation criteria

Selection of successful applicants will be based on the technical and financial criteria described in this announcement. Reviewers will determine the strengths and weaknesses of each application in terms of the evaluation criteria listed below, provide comments, and assign numerical scores. The review panel will prepare a summary of all applicant scores, strengths and weaknesses, and recommendations and submit it to the ASPE for final decisions on the award.

The point value following each criterion heading indicates the maximum numerical weight that each section will be given in the review process. An unacceptable rating on any individual criterion may render the application unacceptable. Consequently, grant applicants should take care to ensure that all criteria are fully addressed in the applications. Applicants are reminded that preference will be given to those proposals that include a study of TANF applicants and/or potential TANF applicants. Grant applications will be reviewed as follows:

1. *Goals, Objectives, and Potential Usefulness of the Analyses* (25 points). The potential usefulness of the objectives and how the anticipated results of the proposed project will advance policy knowledge and development. If the proposed project builds on previous work, the application should explain how. Applications will be judged on the quality and policy relevance of the proposed research questions, study populations, and analyses (including subgroup analyses).

2. *Quality and Soundness of Methodology and Design* (30 points). The appropriateness, soundness, and cost-effectiveness of the methodology, including the research design, selection of existing data sets, data gathering procedures, statistical techniques, and analytical strategies. Richness of policy-relevant data will be an important scoring factor in this criterion.

If analysis of linked administrative data is planned, a critical scoring element will be the proposal's discussion of the methods used to clean, standardize, and link the individual-level or case-level data from different sources, including any proposed links between administrative data and surveys. Applicants should thoroughly discuss how they intend to match case records from different data sources, what internal validity checks will ensure the accuracy of the matches, and the architecture for the resulting data

set. Other design considerations include whether the applicant has already obtained authorization to obtain and use the data to be linked from State or local agencies, and how confidentiality of the records and information will be ensured. If applicants are unable to ensure the privacy and confidentiality of information included in the project, then it is highly unlikely that they will receive funding.

If surveys are planned, reviewers will also evaluate the methodology proposed to gather survey data. In particular, reviewers will evaluate the sampling plan, the survey mode (e.g., telephone, in-person, mail), and the steps that will be taken to address any biases inherent in each. This will include evaluating steps planned to ensure a high response rate, such as a mixed mode design, multiple attempts to contact sample members, or respondent payments, and steps planned to analyze differences between respondents and non-respondents, such as comparisons of linked administrative data. Because of the importance of a high response rate in ensuring reliability, these procedures will be an important part of the evaluation of proposals containing surveys.

If qualitative research such as focus groups or a qualitative description of the TANF application, enrollment and closure policies and procedures are planned, reviewers will evaluate the plan for data collection procedures and analysis, including the planned approach for reviewing written documents, identification of key informants, the composition of any proposed focus groups, planned discussion topics, a plan for summarizing and organizing the results, and the value that this part of the project is expected to add to the final report. The extent to which the application demonstrates a familiarity with the difficulties and potential biases of this approach, and plans to avoid or resolve them, will also be a scoring factor.

Reviewers also will evaluate the proposed data analysis, including the proposed tabulations and table shells, the planned organization of the final report, and the proposal's discussion of how different data sources (e.g., data from administrative sources, survey data collection, other research) will be synthesized to enhance the proposed analyses.

3. *Qualifications of Personnel and Organizational Capability.* (20 points). The qualifications of the project personnel for conducting the proposed research as evidenced by professional training and experience, and the capacity of the organization to provide the infrastructure and support necessary for the project. Reviewers will evaluate the principal investigator and staff on research experience and demonstrated research skills.

Proposals that involve linking of administrative data and assembling of large databases will be scored on the applicant's or subcontractor's experience with such linking efforts. Proposals that involve survey work will be evaluated in terms of the applicant's or subcontractor's experience in conducting relevant surveys, including experience in securing high response rates from welfare recipients or other low-income populations. Similarly, if the proposal involves qualitative data collection or analysis, it will be evaluated in terms of the experience of the applicant or key subcontractors with this type of research and with these populations. If the applicant plans to contract for any of the work (e.g., data-linking, survey design or administration, qualitative analysis), and the contractors have not been retained, reviewers will consider the process by which they will be selected.

Reviewers may consider references for work completed on prior research projects. Principal investigator and staff time commitments also will be a factor in the evaluation. Reviewers will rate the applicant's pledge and ability to work in collaboration with other scholars or organizations in search of similar goals. Reviewers also will evaluate the applicant's demonstrated capacity to work with a range of government agencies.

4. *Ability of the Work Plan and Budget to Successfully Achieve the Project's Objectives.* (20 points). Reviewers will examine if the work plan and budget are reasonable and sufficient to ensure timely implementation and completion of the study and whether the application demonstrates an adequate level of understanding by the applicant of the practical problems of conducting such a project. Adherence to the work plan is necessary in order to produce results in the time frame desired; demonstration of an applicant's ability to meet the schedule will therefore be an important part of this criterion. Reviewers will also examine the use of any additional funding and the role that funds provided under this announcement will play in the overall project.

The proposal should also discuss in detail how resulting data will be made available to qualified researchers and to ASPE. As noted above, ASPE prefers that the data be edited as appropriate for confidentiality and issued as a public-use data file. If the applicant believes that provision of a public-use file would be impossible, the application should explain why and should fully articulate how the applicant will make the data available to qualified researchers and to ASPE.

5. *Ability To Sustain Project After Funding* (5 points). One of the ASPE's goals is to help States and large counties build their capacity to study the outcomes of welfare reform. For projects requiring significant follow-up studies, especially those tracking applicants, potential applicants, and entrants, grant applicants should identify an ability to continue their studies after the funding period closes. To this end, reviewers will consider whether the proposal adequately addresses questions such as the following: What will happen to the linked administrative data sets after the project period expires? What agency(ies) will have responsibility for and jurisdiction over linked administrative data sets after they are created? Are there any sources of financial and staff support for maintaining the database? To what extent could the administrative data linkages performed on the cohort under study be duplicated for later cohorts? To what extent could additional data linkages be performed to follow the initial cohort for additional years?

Disposition of Applications

1. *Approval, disapproval, or deferral.* On the basis of the review of the application, the Assistant Secretary will either (a) approve the application as a whole or in part; (b) disapprove the application; or (c) defer action on the application for such reasons as lack of funds or a need for further review.

2. *Notification of disposition.* The Assistant Secretary for Planning and Evaluation will notify the applicants of the disposition of their applications. If approved, a signed notification of the award will be sent to the business office named in the ASPE checklist.

3. *The Assistant Secretary's Discretion.* Nothing in this announcement should be construed as to obligate the Assistant Secretary for Planning and Evaluation to make any awards whatsoever. Awards and the distribution of awards among the priority areas are contingent on the needs of the Department at any point in time and the quality of the applications that are received.

The Catalog of Federal Domestic Assistance number is 93–239.

Components of a Complete Application

A complete application consists of the following items in this order:

1. Application for Federal Assistance (Standard Form 424);
2. Budget Information—Non-construction Programs (Standard Form 424A);
3. Assurances—Non-construction Programs (Standard From 424B);
4. Table of Contents;
5. Budget Justification for Section B Budget Categories;
6. Proof of Non-profit Status, if appropriate;
7. Copy of the applicant's Approved Indirect Cost Rate Agreement, if necessary;
8. Project Narrative Statement, organized in five sections, addressing the following topics (limited to thirty (30) single-spaced pages):
   (a) Abstract,
   (b) Goals, Objectives and Usefulness of the Project,
   (c) Methodology and design,
   (d) Background of the Personnel and Organizational Capabilities and
   (e) Work plan (timetable);
9. Any appendices or attachments;
10. Certification Regarding Drug-Free Workplace;
11. Certification Regarding Debarment, Suspension, or other Responsibility Matters;
12. Certification and, if necessary, Disclosure Regarding Lobbying;
13. Supplement to Section II—Key Personnel;
14. Application for Federal Assistance Checklist.

Dated: March 26, 1999.

Margaret A. Hamburg,

Assistant Secretary for Planning and Evaluation.

[FR Doc. 99–8069 Filed 3–31–99; 8:45 am]

BILLING CODE 4150–04–P

DEPARTMENT OF HEALTH AND HUMAN SERVICES

Office of the Secretary

The Office of Disease Prevention and Health Promotion, Office of Public Health and Science, Is Seeking a Partnership With a Not-for-Profit Organization To Coordinate Efforts in the Private Sector Related to the National Conference Launching Healthy People 2010

AGENCY: Office of Public Health and Science, Office of Disease Prevention and Health Promotion, DHHS.

ACTION: Notice of partnership initiative.

SUMMARY: Pursuant to Title XVII of the Public Health Service Act, notice is hereby given that the Office of Disease Prevention and Health Promotion, Office of Public Health and Science, is seeking a partnership with a not-for-profit organization to coordinate efforts in the private sector related to the national conference launching Healthy People 2010. Healthy People is a national initiative that sets decade-long targets for health improvement. It has been a major activity in ODPHP's mission since 1979, when the first Surgeon General's Report on Health Promotion and Disease Prevention was published. Healthy People 2000 has been adopted by 47 States and 70 percent of local health departments; it is used as a model by other countries. Healthy People 2010 will be official introduced through a national conference in January 2000. The goal of this partnership is to stimulate the engagement of private sector organizations in the conference and enlist their support for specific events related to the conference, such as satellite and Internet broadcasts, and for scholarships to permit community representatives to participate in the conference. Not-for-profit organizations with missions explicitly related to health but not associated with any single issue or activity and with experience mobilizing the private sector would be well positioned to lead this private-sector effort on behalf of the Healthy People 2010 conference.

Note: The partnership between ODPHP and the outside organization will be formalized through a Memorandum of Agreement that will be effective from the date of signing to March 31, 2000 and will not involve a grant or contract.

DATES: Effective date to receive consideration is the close of business April 30, 1999. Requests will meet the deadline if they are either (1) received on or before the deadline date; or (2) postmarked on or before the deadline date. Private metered postmarks will not be acceptable as proof of timely mailing. Hand delivered requests must be received by 5:00 pm on April 30, 1999. Requests that are received after the deadline date will be returned to the sender.

ADDRESSES: Department of Health and Human Services, Office of Disease Prevention and Health Promotion, 200 Independence Avenue, SW, Suite 738G, Washington, DC 20201.

FOR FURTHER INFORMATION CONTACT: Matthew Guidry, Ph.D., Senior Prevention Program Advisor, Office of Disease Prevention and Health Promotion, Hubert H. Humphrey Building, Suite 738G, 200 Independence Avenue, SW, Washington, DC 20201, 202–401–7780. The electronic mail address is: mguidry@osophs.dhhs.gov.

Dated: March 24, 1999.

Mary Jo Deering,

Acting Director, Office of Disease Prevention and Health Promotion.

[FR Doc. 99–7950 Filed 3–31–99; 8:45 am]

BILLING CODE 4160–17–M

DEPARTMENT OF HEALTH AND HUMAN SERVICES

National Committee on Vital and Health Statistics: Meetings

Pursuant to the Federal Advisory Committee Act, the Department of Health and Human Services announces the following advisory committee meeting.

Name: National Committee on Vital and Health Statistics (NCVHS), Executive Subcommittee.

Times and Dates: 10:00 a.m.–5:30 p.m., April 21, 1999.

Place: Conference Room 405A, Hubert H. Humphrey Building, 200 Independence Ave. S.W., Washington, D.C. 20201.

Status: Open.

Purpose: The Executive Subcommittee of the National Committee on Vital and Health Statistic (NCVHS) is scheduled to hold a meeting on Wednesday, April 21, 1999 in the Hubert H. Humphrey Building, Washington, DC. The NCVHS is the Department's statutory federal advisory committee on health data, privacy and health information policy. At the meeting, the Subcommittee plans to discuss NCVHS subcommittee and work group plans for 1999, review the status of committee projects, priorities and initiatives, and plan for the June 1999 meeting of the full committee. In addition, the Subcommittee is expected to review and finalize the NCVHS 1998 Annual Report to Congress on the Implementation of the Administrative Simplification Provisions of HIPAA, as well as the report to the Secretary on NCVHS activities and accomplishments during 1996–1998.

All topics are tentative and subject to change. Please check the NCVHS website for a detailed agenda prior to the meeting.

Contact Person for More Information: Substantive information as well as a roster of committee members may be obtained by visiting the NCVHS website (http://aspe.os.dhhs.gov/ncvhs), where an agenda will be posted prior to the meeting. You may also contact James Scanlon, NCVHS Executive Staff Director, Office of the Assistant Secretary for Planning and Evaluation, DHHS, Room 440–D, Humphrey Building, 200 Independence Avenue SW, Washington, DC 20201, telephone (202) 690–7100, or Marjorie S. Greenberg, Executive Secretary, NCVHS, NCHS, CDC, Room 1100, Presidential Building, 6525 Belcrest Road, Hyattsville, Maryland 20782, telephone (301) 436–4253.

Note: In the interest of security, the Department has instituted stringent procedures for entrance to the Hubert H. Humphrey Building by non-government employees. Thus, individuals without a

government identification card may need to have the guard call for an escort to the meeting room.

Date: March 25, 1999.

James Scanlon,

Director, Division of Data Policy, Office of Program Systems, Office of the Assistant Secretary for Planning and Evaluation.

[FR Doc. 99–7949 Filed 3–31–99; 8:45 am]

BILLING CODE 4151–04–M

DEPARTMENT OF HEALTH AND HUMAN SERVICES

Agency for Toxic Substances and Disease Registry

[Program Announcement 99069]

Program to Build Environmental Public Health Capacity Within Tribal Colleges and Universities; Notice of Availability of Funds

A. Purpose

The Agency for Toxic Substances and Disease Registry (ATSDR) announces the availability of fiscal year (FY) 1999 funds for a cooperative agreement program to build environmental public health capacity within Tribal Colleges and Universities (TCU). This program addresses the ''Healthy People 2000'' priority areas of Educational and Community-Based Programs and Environmental Health. The purpose of the program is to undertake capacity building activities that will assist TCU programs, and TCU graduates, in addressing human health issues related to exposures to hazardous substances released into the environment which may affect American Indian and Alaska Native peoples. This five-year cooperative agreement program is designed to assist TCUs in the development of environmental health curriculum through the provisions of technical assistance in environmental health science, including toxicology, assistance with materials development, and internships in environmental health nursing, education, and science. The implementation of the program will assist American Indian and Alaska Native nations in: (1) Determining the public health implications from past, present, and potential future human health effects related to exposures from National Priorities List (NPL) sites and other hazardous substance environmental waste sites and releases on tribal lands and (2) determining and evaluating the technical and culturally-appropriate response to such exposures.

B. Eligible Applicants

This program is directed only to Federally recognized Tribal Colleges and Universities as defined in the Executive Order 13201. Thirty TCUs within the United States are thus qualified (see Attachment II in the application kit).

C. Availability of Funds

Approximately $200,000 is available in FY 1999 to fund approximately four awards. It is expected that the average award will be $50,000, ranging from $35,000 to $70,000. It is expected that the awards will begin on or about August 1, 1999, and will be made for a 12-month budget period within a project period of up to five years. Funding estimates may change.

Continuation awards within the approved project period will be made on the basis of satisfactory progress as evidenced by required reports and the availability of funds.

Use of Funds

The funds awarded may be expended for reasonable program purposes, such as personnel, travel, supplies and services. Funds are not to be used for the purchase of furniture or equipment.

The TCU, as the direct and primary recipient of the cooperative agreement program, must perform a substantive role in the project activities and not merely serve as a conduit for an award to another party or provide funds to an ineligible party. Indirect costs are limited as described in an approved indirect rate agreement or other evidence showing indirect rate; documentation on indirect rate must be included in the application.

D. Program Requirements

In conducting activities to achieve the purpose of the program, the recipient shall be responsible for conducting activities under 1., below, and ATSDR will be responsible for conducting activities under 2., below:

1. Recipient Activities

a. Define and develop environmental health curriculum to include, as appropriate for the recipient, environmental health science, health education, and nursing. Prepare project period and budget period work plans.

b. Develop internship programs within the scope of this project.

c. Determine potential collaborative relationships with tribal nations and their environmental health needs to optimize the outcomes of this program.

d. Define appropriate educational materials needed by tribal constituency (i.e., materials translated into native language, and incorporation of traditional cultural information into the curriculum).

e. Develop an evaluation plan to ascertain the effectiveness and impact of the environmental health curriculum and its utilization within the tribal community.

2. ATSDR Activities

a. Assist in the development of the assessment process, and the work plans.

b. Provide technical assistance in the development of the environmental health curriculum

c. Assist in the development of internship programs for TCU students in environmental health science, health education and nursing.

d. Provide technical assistance in the area of evaluation plans.

E. Application Content

Applicants should use the information in the Program Requirements, Other Requirements, and Evaluation Criteria sections to develop the application content. In a narrative form, the application should include a discussion of items listed under ''Evaluation Criteria'' as they relate to the proposed program. Because these criteria serve as the basis for evaluating the application, omissions or incomplete information may affect the rating of the application. The narrative should be no more than 20 double-spaced pages, printed on one side, with one inch margins, and unreduced font.

Although this program does not require in-kind or matching funds, the applicant should include any in-kind support in the formal application. For example, if the in-kind support includes personnel, the applicant should provide the qualifying experience of the personnel, and clearly state the type of activity to be performed and the amount of time to be contributed.

F. Submission and Deadline

Submit the original and two copies of PHS 5161–1 (OMB Number 0937–0189) with your application. On or before June 1, 1999, submit the application to: Nelda Godfrey, Grants Management Specialist, Grants Management Branch, Procurement and Grants Office, Announcement 99069, Centers for Disease Control and Prevention (CDC), 2920 Brandywine Road, Suite 3000, Atlanta, GA 30341–4146.

Deadline: Applications shall be considered as meeting the deadline if they are either:

(a) Received on or before the deadline date; or

(b) Sent on or before the deadline date and received in time for orderly processing. (Applicants must request a legibly dated U.S. Postal Service postmark or obtain a legibly dated receipt from a commercial carrier or

U.S. Postal Service. Private metered postmarks shall not be acceptable as proof of timely mailing.)

Late Applications: Applications which do not meet the criteria in (a) or (b) above are considered late applications, will not be considered, and will be returned to the applicant.

G. Evaluation Criteria

Each application will be evaluated individually against the following criteria by an independent review group appointed by ATSDR.

Proposed Program—40 Percent

a. Clearly stated understanding of environmental health capacity building needs within the TCU, and needs of the affiliated tribal community (where applicable). (10 percent)

b. Clear and reasonable project goals. (10 percent)

c. Extent to which stated project objectives are realistic, measurable, and related to program requirements. (5 percent)

d. Identification of specific target audiences who may benefit from this program. (10 percent)

e. Specificity and feasibility of the proposed time line for implementing project activities. (5 percent)

Proposed Personnel—25 Percent

a. Ability of the applicant to provide adequate program staff and support staff, including any proposed consultants or contractors. (10 percent)

b. Experience of proposed staff in developing materials, implementing activities, and conducting program evaluation related to environmental health curriculum. (7 percent)

c. Experience of staff in conducting culturally appropriate programs to benefit tribal communities, (8 percent)

Capability—35 Percent

a. Cultural appropriateness of the environmental health programs developed for the proposed target groups. (10 percent)

b. Thoroughness of the developed program in addressing environmental health needs of tribal peoples. (8 percent)

c. Extent to which the program may be evaluated to include measures of program outcome and effectiveness, such as changes in participants' technical knowledge, attitudes, and behaviors. (7 percent)

d. Plans for collaborative efforts, to include (where applicable) coordination with tribal staff working on hazardous waste sites and other environmental concerns. (10 percent)

Proposed Budget—(not Scored)

The extent to which the proposed budget is reasonable, clearly justified with a budget narrative, and consistent with the intended use of cooperative agreement funds.

H. Other Requirements

Technical Reporting Requirements

Provide ATSDR with original plus two copies of

1. Semi-annual program progress reports, due 30 days after the end of each six-month time period;

2. Annual progress report and financial status report, no more than 90 days after the end of the budget period; and;

3. Final financial status and performance reports, no more than 90 days after the end of the project period.

Send all reports to: Nelda Godfrey, Grants Management Specialist, Grants Management Branch, Procurement and Grants Office, Centers for Disease Control and Prevention (CDC), 2920 Brandywine Road, Suite 3000, Atlanta, GA 30341–4146.

The following additional requirements are applicable to this program. For a complete description of each, see Attachment I in the application kit.

AR–7	Executive Order 12372 Review.
AR–10	Smoke-Free Workplace Requirements.
AR–11	Healthy People 2000.
AR–12	Lobbying Restrictions.
AR–16	Security Clearance Requirement.
AR–19	Third Party Agreements—ATSDR.

I. Authority and Catalog of Federal Domestic Assistance Number

This program is authorized under sections 104(i)(14), and (15), and 126 of the Comprehensive Environmental Response, Compensation, and Liability Act of 1980 (CERCLA), as amended by the Superfund Amendments and Reauthorization Act of 1986 (SARA) (42 U.S.C.9604 (i) (14), (15) and 9626). The Catalog of Federal Domestic Assistance number is 93.161

J. Where to Obtain Additional Information

Please refer to Program Announcement 99069 when you request information. For a complete program description, information on application procedures, an application package, and business management technical assistance, contact Nelda Godfrey, Grants Management Specialist, Grants Management Branch, Procurement and Grants Office, Announcement 99069, Centers for Disease Control and Prevention (CDC), 2920 Brandywine Road, Suite 3000, Atlanta, GA 30341–4146, telephone (770) 488–2722, Email address: nag9@cdc.gov. See also the CDC home page on the Internet: http://www.cdc.gov.

For program technical assistance, contact Leslie Campbell, M.S., Acting Tribal Coordinator, Division of Health Assessment and Consultation, ATSDR, 1600 Clifton Road, Atlanta, GA 30333, telephone (404) 639–6337 or 1–888–42ATSDR.

Dated: March 26, 1999.

Georgi Jones,

Director, Office of Policy and External Affairs, Agency for Toxic Substances and Disease Registry.

Attachment II—Federally Recognized Tribal Colleges and Universities

1. Bay Mills Community College, Brimley, Michigan
2. Blackfeet Community College, Browning, Montana
3. Cheyenne River Community College, Eagle Butte, South Dakota
4. College of the Menominee Nation, Keshena, Wisconsin
5. Crownpoint Institute of Technology, Crownpoint, New Mexico
6. D-Q University, Davis, California
7. Dineh College/Navajo Community College, Tsaile, Arizona
8. Dull Knife Memorial College, Lame Deer, Montana
9. Fond du Lac Tribal and Community College, Cloquet, Minnesota
10. Fort Belknap Community College, Harlem, Montana
11. Fort Berthold Community College, New Town, North Dakota
12. Fort Peck Community College, Poplar, Montana
13. Haskell Indian Nations University, Lawrence, Kansas
14. Institute of American Indian Arts, Santa Fe, New Mexico
15. Lac Courte Oreilles Ojibwa Community College, Hayward, Wisconsin
16. Leech Lake Tribal College, Cass Lake, Minnesota
17. Little Big Horn College, Crow Agency, Montana
18. Little Hoop Community College, North Dakota
19. Little Priest Tribal College, Winnebago, Nebraska
20. Nebraska Indian Community College
21. Northwest Indian College, Bellingham, Washington
22. Oglala Lakota College, Kyle, South Dakota
23. Salish Kootenai College, Pablo, Montana
24. Sinte Gleska University, Rosebud, South Dakota
25. Sisseton Wahpeton Community College, Sisseton, South Dakota
26. Sitting Bull College, Fort Yates, South Dakota
27. Southwest Indian Polytechnic Institute, Albuquerque, New Mexico
28. Stone Child Community College, Box Elder, Montana

29. Turtle Mountain Community College, Belcourt, North Dakota
30. United Tribes Technical College Bismarck, North Dakota

[FR Doc. 99–8005 Filed 3–31–99; 8:45 am]

BILLING CODE 4163–70–P

DEPARTMENT OF HEALTH AND HUMAN SERVICES

Agency for Toxic Substances and Disease Registry

[Program Announcement 99076]

Human Health Studies—Applied Research and Development; Notice of Availability of Funds

A. Purpose

The Agency for Toxic Substances and Disease Registry (ATSDR) announces the availability of fiscal year (FY) 1999 funds for a grant program entitled Human Health Studies—Applied Research and Development. This program addresses the ''Healthy People 2000'' priority area of Environmental Health.

The purpose of this program is to fill gaps in knowledge regarding human health effects of hazardous substances focusing on those health conditions prioritized by ATSDR. The ATSDR Priority Health Conditions are (in alphabetical order): (1) Birth defects and reproductive disorders; (2) cancers (selected anatomic sites); (3) immune function disorders; (4) kidney dysfunction; (5) liver dysfunction; (6) lung and respiratory diseases; and (7) neurotoxic disorders. The program will focus upon sensitive human populations (women, children and elderly), the use of innovative methodologies to fill data gaps identified through ATSDR's public health assessments and consultations at hazardous waste sites, ecologic studies using data from multiple sites to assess the health status of several communities, and analytical studies, including meta-analysis of existing sets of human data.

Research activities may include, but not be limited to the following: (1) Epidemiological studies, (2) health outcomes studies, (3) further analysis of existing human data sets, (4) identification, validation, and development of biomarkers of exposure, susceptibility, and effect, and (5) further evaluating the link or lack of linkage between specific hazardous substances and specific health effects.

B. Eligible Applicants

Assistance will be provided only to official public health agencies of states or their bona fide agents or instrumentalities. This includes the District of Columbia, American Samoa, the Commonwealth of Puerto Rico, the Virgin Islands, the Federated States of Micronesia, Guam, the Northern Mariana Islands, the Republic of the Marshall Islands, the Republic of Palau, and federally recognized Indian tribal governments. State organizations, including state universities, state colleges, and state research institutions, must establish that they meet their respective state's definition of a state entity or political subdivision to be considered an eligible applicant.

C. Availability of Funds

Approximately $350,000 is available in FY 1999 to fund one or two awards. The award(s) is expected to begin on or about September 30, 1999, and will be made for a 12-month budget period within a project period of up to three years. Funding estimates are subject to change.

Continuation awards within an approved project period will be made on the basis of satisfactory progress as evidenced by required reports and the availability of funds.

Use of Funds

Funds may be expended for reasonable program purposes, such as personnel, travel, supplies, and services. Funds for contractual services may be requested; however, the grantee, as the direct and primary recipient of grant funds, must perform a substantive role in carrying out project activities and not merely serve as a conduit for an award to another party or provide funds to an ineligible party. Equipment may be purchased with grant funds, however, justification must be provided which should include a cost comparison of purchase versus lease, and title will be retained by ATSDR.

This program does not require in-kind support or matching funds, however, the applicant should describe any in-kind support in the application.

Funding Priorities

Priority will be given for studies which address one or more of the following areas of investigation:

1. Evaluate the occurrence of adverse health effects in sensitive populations. This will include the evaluation of the incidence or prevalence of a disease, disease symptoms, self-reported health concerns, or biological markers of disease, susceptibility, or exposure. Sensitive populations are persons who are more susceptible to developing adverse health effects resulting from exposures to hazardous substances [e.g., extremes in age (children and the elderly), other medical conditions, genetic factors, dietary or nutritional deficiencies, poverty, or racial injustice].

2. Identify risk factors for adverse health effects in populations. This will include hypothesis generating cohort or case-control studies on potentially impacted populations to identify linkages between exposure to hazardous substances and adverse health effects and those risk factors which may be impacted by prevention actions.

D. Application Content

Use the information in the Other Requirements and Evaluation Criteria sections to develop the application content. Your application will be evaluated on the criteria listed, so it is important to follow them in laying out your program plan.

The application should be presented in a manner that demonstrates the applicant's ability to address environmental health problems.

The applicant's protocol should contain (when applicable) consent forms and questionnaires, baseline morbidity and mortality information, procedures for collecting biological and environmental specimens and for conducting laboratory analysis and evaluation of the test results of biological specimens, statistical and epidemiological analysis of study information, and a description of the safeguards for protecting the confidentiality of individuals on whom data are collected.

The application pages must be clearly numbered, and a complete index to the application and its appendices must be included. A less than 200 word abstract of the proposed project should be supplied with the application. The original and two copies of the application must be submitted unstapled and unbound. All material must be typed single-spaced, with unreduced font on 8½″ by 11″ paper, printed on one side, and with one inch margins.

E. Submission and Deadline

Application

Submit the original and two copies of PHS 5161–1 (OMB Number 0937–0189). Forms are in the application kit. On or before June 18, 1999, submit the application to:

Nelda Godfrey, Grants Management Specialist, Grants Management Branch, Procurement and Grants Office, Announcement 99076, Centers for Disease Control and Prevention (CDC), 2920 Brandywine Road, Suite 3000, Atlanta, GA 30341–4146.

Deadline: Applications shall be considered as meeting the deadline if they are either:

(a) Received on or before the deadline date; or

(b) Sent on or before the deadline date and received in time for orderly processing. (Applicants must request a legibly dated U.S. Postal Service postmark or obtain a legibly dated receipt from a commercial carrier or U.S. Postal Service. Private metered postmarks shall not be acceptable as proof of timely mailing.)

Late Applications: Applications which do not meet the criteria in (a) or (b) above are considered late applications, will not be considered, and will be returned to the applicant.

F. Evaluation Criteria

Each application will be evaluated individually against the following criteria by an independent review group appointed by ATSDR.

Review Criteria

1. Appropriateness and Knowledge of Study Design (25 percent)

Extent to which the applicant's proposal addresses: (a) The scientific merit of the proposed project, including the novelty, originality and feasibility of the approach and the adequacy of the design; (b) the technical merit of the proposed project, including the degree to which the project can be expected to yield or demonstrate results that will be useful and desirable in furthering the program objectives; and (c) the proposed project schedule, including clearly established and obtainable project objectives for which progress toward attainment can and will be measured.

2. Proposed Study (25 percent)

Adequacy of the proposal relevant to: (a) The study purpose, objectives, and rationale; (b) the quality of program objectives in terms of specificity, measurability, and feasibility; (c) the specificity and feasibility of the applicant's timetable for implementing program activities and timely completion of the study; (d) the likelihood of the applicant agency completing proposed program activities and attaining proposed objectives based on the thoroughness and clarity of the overall program; and (e) the degree to which the applicant has met the CDC Policy requirements regarding the inclusion of women, ethnic, and racial groups in the proposed research. This includes:

1. The proposed plan for the inclusion of both sexes and racial and ethnic minority populations for appropriate representation.

2. The proposed justification when representation is limited or absent.

3. A statement as to whether the design of the study is adequate to measure differences when warranted.

4. A statement as to whether the plans for recruitment and outreach for study participants include the process of establishing partnerships with community(ies) and recognition of mutual benefits.

3. Relationship to Initiative (15 percent)

Extent to which the application addresses the areas of investigation outlined.

4. Quality of Data Collection (15 percent)

Extent to which: (a) The study ascertains the information necessary to meet the objectives, including (but not limited to) information on pathways of exposure, confounding factors, and biomedical testing; (b) the quality control and quality assurance of questionnaire data are provided, including (but not limited to) interviewer training and consistency checks of data; (c) the laboratory tests (if applicable) are sensitive and specific for the analyte or disease outcome of interest; and (d) the quality control, quality assurance, precision and accuracy of information for the proposed tests are provided and acceptable.

5. Capability and Coordination Efforts (10 percent)

Extent to which the proposal has described: (a) The capability of the applicant's administrative structure to foster successful scientific and administrative management of a study; (b) the capability of the applicant to demonstrate an appropriate plan for interaction with the community; and (c) the suitability of facilities and equipment available or to be purchased for the project.

6. Program Personnel (10 percent)

Extent to which the proposed program staff is qualified and appropriate, and the time allocated for them to accomplish program activities is adequate.

7. Budget (Not scored)

Extent to which the budget is reasonable, clearly justified, and consistent with intended use of funds.

8. Human Subjects (Not scored)

Does the application adequately address the requirements of 45 CFR part 46 for the protection of human subjects? Are procedures adequate for the protection of human subjects? Recommendations on the adequacy of protections include: (1) Protections appear adequate and there are no comments to make or concerns to raise, or (2) protections appear adequate, but there are comments regarding the protocol, or (3) protections appear inadequate and the Objective Review Group (ORG) has concerns related to human subjects; or (4) disapproval of the application is recommended because the research risks are sufficiently serious and protection against the risks are inadequate as to make the entire application unacceptable.

G. Other Requirements

Technical Reporting Requirements

Provide CDC with original plus two copies of:

1. Progress reports (annual);
2. Financial status report, no more than 90 days after the end of the budget period; and
3. Final financial status and performance reports, no more than 90 days after the end of the project period.

Send all reports to: Nelda Y. Godfrey, Grants Management Specialist Grants Management Branch Procurement and Grants, Office, Grant Number: __, Centers for Disease Control and Prevention (CDC), 2920 Brandywine Road, Suite 3000, Atlanta, GA 30341–4146.

The following additional requirements are applicable to this program. For a complete description of each, see Attachment I in the application kit.

AR–1—Human Subjects Requirements
AR–2—Requirements for Inclusion of Women and Racial and Ethnic Minorities in Research
AR–7—Executive Order 12372 Review
AR–9—Paperwork Reduction Act
AR–10—Smoke-Free Workplace Requirements
AR–11—Healthy People 2000
AR–12—Lobbying Restrictions
AR–17—Peer and Technical Reviews of Final Reports of Health Studies—ATSDR
AR–18—Cost Recovery—ATSDR
AR–19—Third Party Agreements—ATSDR

H. Authority and Catalog of Federal Domestic Assistance Number

This program is authorized under section 104(i)(1)(E), (7), and (15) of the Comprehensive Environmental Response, Compensation, and Liability Act of 1980 (CERCLA) as amended by the Superfund Amendments and Reauthorization Act of 1986 (SARA) (42 U.S.C. 9604 (i)(1)(E), (7), and (15)). The

Catalog of Federal Domestic Assistance number is 93.161.

I. Where To Obtain Additional Information

To receive additional written information and to request an application kit, call 1–888–GRANTS4 (1–888–472–6874). You will be asked to leave your name and address and will be instructed to identify the announcement number of interest.

See also the CDC home page on the Internet for a complete copy of the announcement: http://www.cdc.gov.

If you have questions after reviewing the contents of all the documents, business management technical assistance may be obtained from: Nelda Y. Godfrey, Grants Management Specialist, Grants Management Branch, Procurement and Grants Office, Announcement 99076, Centers for Disease Control and Prevention (CDC), 2920 Brandywine Road, Suite 3000, Atlanta, GA 30341–4146, telephone (770) 488–2722, E-mail address NAG9@cdc.gov.

For program technical assistance, contact: Jeffrey A. Lybarger, M.D., Director, Division of Health Studies, Agency for Toxic Substances and Disease Registry, Executive Park, Building 4 Suite 2300, Atlanta, GA 30305, telephone (404) 639–6200, E-mail address JAL2@cdc.gov.

Dated: March 26, 1999.

Georgi Jones,

Director, Office of Policy and External Affairs, Agency for Toxic Substances and Disease Registry.

Background

Since 1993, ATSDR has applied this paradigm to the evaluation of seven priority health conditions. This purpose of these evaluations was to support the development of a body of knowledge about the interrelationships of the model parameters and thus the relationship between exposures to hazardous substances and adverse health effects. Health studies were conducted and supported predominantly evaluating a coss-section of the general public living near waste sites. It is possible, however, that the occurrence of adverse health effects and subclinical toxic effects are more common among a small number of sensitive people. People may be more likely to experience adverse health effects resulting from exposures to hazardous substances if they have underlying illnesses, suffer effects of poverty such as poor diet or education about health seeking behaviors, have limited physiological reserve of organ function due to being very young or very old, or are limited by environmental injustices. The application of this paradigm to selected groups of persons with hypothesized sensitivities would assist in identifying affected people and evaluating risk modifying factors.

[FR Doc. 99–8004 Filed 3–31–99; 8:45 am]

BILLING CODE 4163–70–P

DEPARTMENT OF HEALTH AND HUMAN SERVICES

Agency for Toxic Substance and Disease Registry

Inter-Tribal Council on Hanford Health Projects; Notice of Meeting

Public meeting of the Inter-tribal Council on Hanford Health Projects (ICHHP) in association with the Citizens Advisory Committee on Public Health Service (PHS) Activities and Research at Department of Energy (DOE) Sites: Hanford Health Effects Subcommittee (HHES).

The Agency for Toxic Substances and Disease Registry (ATSDR) and the Centers for Disease Control and Prevention (CDC) announce the following meeting.

Name: Public meeting of the ICHHP in association with the Citizens Advisory Committee on PHS Activities and Research at DOE Sites: HHES.

Time and Date: 9 a.m.–4 p.m., May 12, 1999.

Place: Tamastslikt Cultural Institute, Umatilla Indian Reservation, 72777 Highway 331, Pendleton, Oregon 97801.

Status: Open to the public, limited only by the space available. The meeting room accommodates approximately 35 people.

Background: Under a Memorandum of Understanding (MOU) signed in October 1990 and renewed in November 1992 between ATSDR and DOE. The MOU delineates the responsibilities and procedures for ATSDR's public health activities at DOE sites required under sections 104, 105, 107, and 120 of the Comprehensive Environmental Response, Compensation, and Liability Act (CERCLA or ''Superfund''). These activities include health consultations and public health assessments at DOE sites listed on, or proposed for, the Superfund National Priorities List and at sites that are the subject of petitions from the public; and other health-related activities such as epidemiologic studies, health surveillance, exposure and disease registries, health education, substance-specific applied research, emergency response, and preparation of toxicological profiles.

In addition, under an MOU signed in December 1990 with DOE and replaced by an MOU signed in 1996, the Department of Health and Human Services (HHS) has been given the responsibility and resources for conducting analytic epidemiologic investigations of residents of communities in the vicinity of DOE facilities, workers at DOE facilities, and other persons potentially exposed to radiation or to potential hazards from non-nuclear energy production and use. HHS has delegated program responsibility to CDC.

Community Involvement is a critical part of ATSDR's and CDC's energy-related research and activities and input from members of the ICHHP is part of these efforts. The ICHHP will work with the HHES to provide input on American Indian health effects at the Hanford, Washington site.

Purpose: The purpose of this meeting is to address issues that are unique to tribal involvement with the HHES, including discussion on Hanford Thyroid Disease Study results, update on tribal cooperative agreements, and development of a National Research Agenda with tribal input.

Matters to Be Discussed: Agenda items will include a dialogue on issues that are unique to tribal involvement with the HHES. This will include updating tribal members of the cooperative agreement activities in environmental health capacity building and providing support for tribal involvement in and representation on the HHES.

Agenda items are subject to change as priorities dictate.

Contact Persons for More Information: Leslie C. Campbell, Executive Secretary HHES, or Marilyn Palmer, Committee Management Specialist, Division of Health Assessment and Consultation, ATSDR, 1600 Clifton Road, NE, M/S E–56, Atlanta, Georgia 30333, telephone 1–888/42-ATSDR (28737), fax 404/639–6075.

The Director, Management Analysis and Services office has been delegated the authority to sign **Federal Register** notices pertaining to announcements of meetings and other committee management activities, for both the Centers for Disease Control and Prevention and the Agency for Toxic Substances and Disease Registry.

Dated: March 25, 1999.

Carolyn J. Russell,

Director, Management Analysis and Services Office, Centers for Disease Control and Prevention (CDC).

[FR Doc. 99–8007 Filed 3–31–99; 8:45 am]

BILLING CODE 4163–18–P

DEPARTMENT OF HEALTH AND HUMAN SERVICES

Agency for Toxic Substances and Disease Registry

Citizens Advisory Committee on Public Health Service (PHS) Activities and Research at Department of Energy (DOE) Sites: Hanford Health Effects Subcommittee

In accordance with section 10(a)(2) of the Federal Advisory Committee Act (Pub. L. 92–463), the Agency for Toxic Substances and Disease Registry (ATSDR) and the Centers for Disease Control and Prevention (CDC) announce the following meeting.

Name: Citizens Advisory Committee on PHS Activities and Research at DOE Sites: Hanford Health Effects Subcommittee (HHES).

Times and Dates: 8:30 a.m.–5 p.m., May 13, 1999; 8:30 a.m.–4 p.m., May 14, 1999.

Place: Tamastslikt Cultural Institute, Umatilla Indian Reservation, 72777 Highway 331, Pendleton, Oregon 97801.

Status: Open to the public, limited only by the space available. The meeting room accommodates approximately 100 people.

Background: Under a Memorandum of Understanding (MOU) signed in October 1990 and renewed in November 1992 between ATSDR and DOE. The MOU delineates the responsibilities and procedures for ATSDR's public health activities at DOE sites required under sections 104, 105, 107, and 120 of the Comprehensive Environmental Response, Compensation, and Liability Act (CERCLA or ''Superfund''). These activities include health consultations and public health assessments at DOE sites listed on, or proposed for, the Superfund National Priorities List and at sites that are the subject of petitions from the public; and other health-related activities such as epidemiologic studies, health surveillance, exposure and disease registries, health education, substance-specific applied research, emergency response, and preparation of toxicological profiles.

In addition, under an MOU signed in December 1990 with DOE and replaced by an MOU signed in 1996, the Department of Health and Human Services (HHS) has been given the responsibility and resources for conducting analytic epidemiologic investigations of residents of communities in the vicinity of DOE facilities, workers at DOE facilities, and other persons potentially exposed to radiation or to potential hazards from non-nuclear energy production and use. HHS has delegated program responsibility to CDC.

Purpose: This subcommittee is charged with providing advice and recommendations to the Director, CDC, and the Administrator, ATSDR, regarding community, American Indian Tribes, and labor concerns pertaining to CDC's and ATSDR's public health activities and research at this DOE site. The purpose of this meeting is to receive an update from the Inter-tribal Council on Hanford Health Projects; to review and approve the Minutes of the previous meeting; to receive updates from ATSDR/NCEH and NIOSH; to receive reports from the Outreach, Public Health Assessment, Public Health Activities, and the Studies Workgroups; and to address other issues and topics, as necessary.

Matters to be Discussed: Agenda items include a presentation and discussion on Native American Risk Scenario, question and answer session with Hanford Thyroid Disease Study researchers, and agency updates.

Agenda items are subject to change as priorities dictate.

Contact Persons for More Information: Leslie C. Campbell, Executive Secretary HHES, or Marilyn Palmer, Committee Management Specialist, Division of Health Assessment and Consultation, ATSDR, 1600 Clifton Road, NE, M/S E–56, Atlanta, Georgia 30333, telephone 1–888/42–ATSDR(28737), fax 404/639–6075.

The Director, Management Analysis and Services office has been delegated the authority to sign **Federal Register** notices pertaining to announcements of meetings and other committee management activities, for both the Centers for Disease Control and Prevention and the Agency for Toxic Substances and Disease Registry.

Dated: March 25, 1999.

Carolyn J. Russell,

Director, Management Analysis and Services Office, Centers for Disease Control and Prevention (CDC).

[FR Doc. 99–8008 Filed 3–31–99; 8:45 am]

BILLING CODE 4163–18–P

DEPARTMENT OF HEALTH AND HUMAN SERVICES

Centers for Disease Control and Prevention

[30DAY–10–99]

Agency Forms Undergoing Paperwork Reduction Act Review

The Centers for Disease Control and Prevention (CDC) publishes a list of information collection requests under review by the Office of Management and Budget (OMB) in compliance with the Paperwork Reduction Act (44 U.S.C. Chapter 35). To request a copy of these requests, call the CDC Reports Clearance Officer at (404) 639–7090. Send written comments to CDC, Desk Officer; Human Resources and Housing Branch, New Executive Office Building, Room 10235; Washington, DC 20503. Written comments should be received within 30 days of this notice.

Proposed Project:

1. Mammography Rescreening Rates and Risk Factor Assessment—New—The National Center for Chronic Disease Prevention and Health Promotion, Division of Cancer Control and Prevention proposes to conduct mammography research to reduce breast cancer deaths by detecting tumors while they are still small and easier to treat. Because new tumors can develop in women previously free of breast cancer, older women who face higher risks of developing breast cancer should complete mammography screening every one to two years. To provide cancer screening for low income women, Congress passed the Breast and Cervical Cancer Mortality Prevention Act (Pub. L. 101–354) in 1990. The Division of Cancer Prevention and Control (DCPC) in the National Center for Chronic Disease Prevention and Health Promotion (NCCDPHP), Centers for Disease Control and Prevention (CDC) was given funding to establish the National Breast and Cervical Cancer Early Detection Program (NBCCEDP). The NBCCEDP now provides mammography and cervical cancer screening services to low income and medically under-served women in all 50 states, the District of Columbia, 4 territories, and 13 tribes. To assist state, territorial, and tribal programs with efficient service delivery, new data are needed to (1) estimate scientifically valid, statistically precise estimates of mammography rescreening rates and (2) identify the factors associated with timely rescreening among NBCCEDP-enrollees.

To obtain data on mammography rescreening rates and risk factors, DCPC plans to conduct telephone interviews with a random sample of 2,250 NBCCEDP-enrollees from four states. Consenting women will complete a 35 minute telephone interview about their knowledge, attitudes, and experiences with mammography screening. Those who report having received a mammogram during the study period (April 1, 1997 through September 30, 2000) will be asked to sign a release of information form so a copy of the mammography report can be obtained to verify the date the procedure was completed. All women invited to participate in the survey will be 50–73 years of age. Each telephone interview will be scheduled for a time (day, evening, or weekend) and place that is convenient to the participant. The total annual burden hours are 2,223.

Respondents (forms)	No. of respondents	No. of responses/ respondent	Average burden/response (in hrs.)	Total burden (in hrs.)
Telephone Script for Project Coordination	2,500	1	0.167	417
Telephone Interview	2,250	1	0.50	1,125
Consent Form to Release Mammography Reports	1,350	1	0.167	225
Mammography Reports	1,215	1.5	0.25	456

2. Multistate Case-Control Study of Childhood Brain Cancers—New—The Agency for Toxic Substances and Disease Registry (ATSDR) is mandated pursuant to the 1980 Comprehensive Environmental Response Compensation and Liability Act (CERCLA), and its 1986 Amendments, The Superfund Amendments and Reauthorization Act (SARA), to prevent or mitigate adverse human health effects and diminished quality of life resulting from exposure to hazardous substances in the environment. Scientific knowledge is lacking concerning the reasons for the apparent rise in childhood brain cancer incidence during the last two decades in the U.S. and for explanations of childhood brain cancer in general. To date, most epidemiologic studies exploring the causes of childhood brain cancer have suffered from lack of statistical power due to the small numbers of cases available for the study. By combining recent childhood brain cancer data from multiple states, this study will help to better understand what environmental factors may be associated with childhood brain cancer, and therefore, to possibly develop well-focused prevention measures.

This study will examine the association between environmental exposures and risk of childhood brain cancers by employing a population based case-control study of childhood brain cancer. Information to be collected includes proximity of parental residence to hazardous waste sites and other known or suspected risk factors. Other known or purported risk factors identified from the literature, will include both environmental and host factors during the prenatal as well as postnatal periods: parental occupation, parents' and child's dietary habits, parental history of smoking and drinking, mother's and child's exposure to radiation through medical care, residential use of pesticides or herbicides, mother's and child's history of viral infection, and family history of cancer and neurological disorders. This request is for a three-year OMB approval. Total annual burden hours are 603.

Respondents	No. of respondents	No. of responses/ respondent	Avg. burden/ response (in hrs.)	Total burden (in hrs.)*
Screener for controls	16,000	1	0.05	800
Mothers of children with childhood brain cancers and controls (interview)	1,200	1	0.75	900
Mothers of children with early childhood brain cancers and controls (biological testing)	100	1	1.083	108

*1,808 ÷ 3 years = 603 annualized burden hours.

Nancy Cheal,

Acting Associate Director for Policy, Planning and Evaluation, Centers for Disease Control and Prevention (CDC).

[FR Doc. 99–8006 Filed 3–31–99; 8:45 am]

BILLING CODE 4163–18–P

DEPARTMENT OF HEALTH AND HUMAN SERVICES

Food and Drug Administration

[Docket No. 99D–0463]

Foods—Adulteration Involving Hard or Sharp Foreign Objects; Compliance Policy Guide; Availability

AGENCY: Food and Drug Administration, HHS.

ACTION: Notice.

SUMMARY: The Food and Drug Administration (FDA) is announcing the availability of a compliance policy guide (CPG) entitled ''Foods—Adulteration Involving Hard or Sharp Foreign Objects.'' This CPG is intended to help FDA components and industry comply with FDA's internal enforcement process concerning foods that contain hard or sharp foreign objects.

DATES: Written comments on this CPG may be submitted at any time.

ADDRESSES: Submit written requests for single copies of Compliance Policy Guide (CPG) Sec. 555.425 ''Foods—Adulteration Involving Hard or Sharp Foreign Objects'' to the Director, Division of Compliance Policy (HFC–230), Office of Enforcement, Food and Drug Administration, 5600 Fishers Lane, Rockville, MD 20857. Send two self-addressed adhesive labels to assist that office in processing your request, or fax your request to 301–827–0482. Copies of the CPG may also be downloaded to a personal computer with access to the World Wide Web (WWW). The Office of Regulatory Affairs (ORA) home page includes the CPG and may be accessed at ''http://www.fda.gov/ora''. The CPG will be available on the Compliance References page for ORA.

Submit comments to MaryLynn A. Datoc, the second contact person listed in this document in the ''**FOR FURTHER INFORMATION CONTACT**'' section.

FOR FURTHER INFORMATION CONTACT:

Technical Questions Concerning Foreign Objects in Foods: Alan R. Olsen, Microanalytical Branch (HFS–315), Office of Plant, Dairy Foods, and Beverages, Center for Food Safety and Applied Nutrition, Food and Drug Administration, 200 C St. SW., Washington, DC 20204, 202–205–4438, FAX 202–205–4091.

Questions Concerning Regulatory Actions and All Comments: MaryLynn A. Datoc, Division of Compliance Policy (HFC–230), Office of Enforcement, Office of Regulatory Affairs, Food and Drug Administration, 5600 Fishers Lane, Rockville, MD 20857, 301–827–0413, FAX 301–827–0482.

SUPPLEMENTARY INFORMATION: FDA has developed a CPG to provide guidance on FDA's internal enforcement process concerning foods that contain hard or sharp foreign objects. This guidance synthesizes FDA's case-by-case responses to the problem of hard or sharp foreign objects in food. The CPG is intended to provide clear policy and regulatory guidelines to FDA's field and headquarters staff with regard to such foods. It also contains information that may be useful to the regulated industry and to the public.

Therefore, FDA has prepared a CPG to describe its internal enforcement process. The CPG is being issued as a guidance document and represents the agency's current thinking on the subject. It does not create or confer any rights for or on any person and does not operate to bind FDA or the public.

The agency has adopted good guidance practices (GGP's) that set forth the agency's policies and procedures for the development, issuance, and use of guidance documents (62 FR 8961, February 27, 1997). This CPG is being issued as a level 2 guidance consistent with GGP's.

Interested persons may submit to the second contact person listed in this document written comments regarding the CPG entitled ''Foods—Adulteration Involving Hard or Sharp Foreign Objects.'' Two copies of any comments

are to be submitted, except that individuals may submit one copy. Comments are to be identified with the docket number found in brackets in the heading of this document. A copy of the CPG and received comments may be seen in the office above between 9 a.m. and 4 p.m., Monday through Friday.

Dated: March 23, 1999.

Gary Dykstra,

Acting Associate Commissioner for Regulatory Affairs.

[FR Doc. 99–7923 Filed 3–31–99; 8:45 am]

BILLING CODE 4160–01–F

DEPARTMENT OF HEALTH AND HUMAN SERVICES

Health Care Financing Administration

[Document Identifier: HCFA–R–0021]

Agency Information Collection Activities: Proposed Collection; Comment Request

AGENCY: Health Care Financing Administration.

In compliance with the requirement of section 3506(c)(2)(A) of the Paperwork Reduction Act of 1995, the Health Care Financing Administration (HCFA), Department of Health and Human Services, is publishing the following summary of proposed collections for public comment. Interested persons are invited to send comments regarding this burden estimate or any other aspect of this collection of information, including any of the following subjects: (1) The necessity and utility of the proposed information collection for the proper performance of the agency's functions; (2) the accuracy of the estimated burden; (3) ways to enhance the quality, utility, and clarity of the information to be collected; and (4) the use of automated collection techniques or other forms of information technology to minimize the information collection burden.

Type of Information Collection Request: New collection; *Title of Information Collection:* Withholding Medicare Payments to Recover Medicaid Overpayments and Supporting Regulations in 42 CFR 447.31; *Form No.:* HCFA–R–0021 (OMB# 0938–0287); *Use:* Overpayments may occur in either the Medicare and Medicaid program, at times resulting in a situation where an institution or person that provides services owes a repayment to one program while still receiving reimbursement from the other. Certain Medicaid providers which are subject to offsets for the collection of Medicaid overpayments may terminate or substantially reduce their participation in Medicaid, leaving the State Medicaid Agency unable to recover the amounts due. These information collection requirements give HCFA the authority to recover Medicaid overpayments by offsetting payments due to a provider under the program; *Frequency:* On occasion; *Affected Public:* State, Local, or Tribal Government; *Number of Respondents:* 54; *Total Annual Responses:* 27; *Total Annual Hours:* 81.

To obtain copies of the supporting statement and any related forms for the proposed paperwork collections referenced above, access HCFA's Web Site address at http://www.hcfa.gov/regs/prdact95.htm, or E-mail your request, including your address, phone number, OMB number, and HCFA document identifier, to Paperwork@hcfa.gov, or call the Reports Clearance Office on (410) 786–1326. Written comments and recommendations for the proposed information collections must be mailed within 60 days of this notice directly to the HCFA Paperwork Clearance Officer designated at the following address: HCFA, Office of Information Services, Security and Standards Group, Division of HCFA Enterprise Standards, Attention: Louis Blank, Room N2–14–26, 7500 Security Boulevard, Baltimore, Maryland 21244–1850.

Dated: March 25, 1999.

John P. Burke III,

HCFA Reports Clearance Officer, HCFA Office of Information Services, Security and Standards Group, Division of HCFA Enterprise Standards.

[FR Doc. 99–8035 Filed 3–31–99; 8:45 am]

BILLING CODE 4120–03–P

DEPARTMENT OF HEALTH AND HUMAN SERVICES

Health Resources and Services Administration

Advisory Council; Notice of Meeting

Pursuant to section 10(d) of the Federal Advisory Committee Act, as amended (5 U.S.C. Appendix 2), Correction to the **Federal Register** Notice dated August 31, 1998, are listed below for the Health Professions and Nurse Education Special Emphasis Panel (SEP) Meetings.

Name: Physician Assistants Program Review Group.

Date and Time: May 3–5, 1999, 8:00 a.m. to 6:00 p.m., New Session.

Place: Holiday Inn Silver Spring, 8777 Georgia Avenue, Silver Spring, Maryland 20910.

Open on: May 3, 1999, 8:00 a.m. to 10:00 a.m.

Closed on: May 3, 1999, 10:00 a.m. to 6:00 p.m.; May 4–5, 1999, 8:00 a.m. to 6:00 p.m.

Name: Health Careers Opportunity Program Review Group.

Date and Time: June 21–15, 1999, 8:00 a.m. to 6:00 p.m. Change from May 10–13, 1999.

Place: Holiday Inn Silver Spring, 8777 Georgia Avenue, Silver Spring, Maryland 20910.

Open on: June 21, 1999, 8:00 a.m. to 10:00 a.m.

Closed on: June 21, 1999, 10:00 a.m. to 6:00 p.m., June 22–25, 1999, 8:00 a.m. to 6:00 p.m.

Name: Health Careers Opportunity Program Review Group.

Date and Time: June 28–July 2, 1999, 8:00 a.m. to 6:00 p.m. Change from May 24–27, 1999.

Place: Holiday Inn Silver Spring, 8777 Georgia Avenue, Silver Spring, Maryland 20910.

Open on: June 28, 1999, 8:00 a.m. to 10:00 a.m.

Closed on: June 28, 1999, 10:00 a.m. to 6:00 p.m., June 29–July 2, 1999, 8:00 a.m. to 6:00 p.m.

Dated: March 19, 1999.

Jane M.Harrison,

Director, Division of Policy, Review and Coordination.

[FR Doc. 99–7927 Filed 3–31–99; 8:45 am]

BILLING CODE 4160–15–P

DEPARTMENT OF HEALTH AND HUMAN SERVICES

Health Resources and Services Administration

Advisory Council; Notice of Meeting

In accordance with section 10(a)(2) of the Federal Advisory Committee Act (Public Law 92–463), announcement is made of the following national advisory body scheduled to meet during the month of April 1999.

Name: Advisory Committee on Infant Mortality.

Date and Time: April 12, 1999, 9:00 a.m.–5:00 p.m., April 13, 1999, 8:30 a.m.–3:00 p.m.

Place: Holiday Inn at Silver Spring, 8777 Georgia Avenue, Silver Spring, MD 20910, (301) 589–0800.

The meeting is open to the public.

Agenda: Topics that will be discussed include: Early Postpartum Discharge; Low-Birth Weight; Discrepancies in Infant Mortality; and the Healthy Start Program.

Anyone requiring information regarding the Committee should contact Dr. Peter C. van Dyck, Executive Secretary, Advisory Committee on Infant Mortality, Health Resources and Services Administration, Room 18–05, Parklawn Building, 5600 Fishers Lane, Rockville, MD 20857, Telephone (301) 443–2170.

Persons interested in attending any portion of the meeting or having questions regarding the meeting should contact Ms. Kerry P.

Nesseler, Health Resources and Services Administration, Maternal and Child Health Bureau, Telephone (301) 443–2170.

Agenda items are subject to change as priorities dictate.

Dated: March 19, 1999.

Jane M. Harrison,

Director, Division of Policy Review and Coordination.

[FR Doc. 99–7926 Filed 3–31–99; 8:45 am]

BILLING CODE 4160–15–P

DEPARTMENT OF HEALTH AND HUMAN SERVICES

National Institutes of Health

National Institute of Mental Health; Notice of Closed Meetings

Pursuant to section 10(d) of the Federal Advisory Committee Act, as amended (5 U.S.C. Appendix 2), notice is hereby given of the following meetings.

The meetings will be closed to the public in accordance with the provisions set forth in sections 552b(c)(4) and 552b(c)(6), Title 5 U.S.C., as amended. The grant applications and the discussions could disclose confidential trade secrets or commercial property such as patentable material, and personal information concerning individuals associated with the grant applications, the disclosure of which would constitute a clearly unwarranted invasion of personal privacy.

Name of Committee: National Institute of Mental Health Special Emphasis Panel.

Date: March 30, 1999.

Time: 1:30 p.m. to 2:30 p.m.

Agenda: To review and evaluate grant applications.

Place: Neuroscience Center, National Institutes of Health, 6001 Executive Blvd., Bethesda, MD 20892, (Telephone Conference Call).

Contact Person: Robert H. Stretch, Phd, Scientific Review Administrator, Division of Extramural Activities, National Institute of Mental Health, NIH, Neuroscience Center, 6001 Executive Blvd., Room 6150, MSC 9608, Bethesda, MD 20892–9608, 301–443–4728.

This notice is being published less than 15 days prior to the meeting due to the timing limitations imposed by the review and funding cycle.

Name of Committee: National Institute of Mental Health Special Emphasis Panel.

Date: April 6, 1999.

Time: 11:30 a.m. to 2:00 p.m.

Agenda: To review and evaluate grant applications.

Place: St. James Hotel, 950 24th Street, N.W., Washington, DC 20037.

Contact Person: Jean G. Noronha, Phd, Scientific Review Administrator, Division of Extramural Activities, National Institute of Mental Health, NIH, Neuroscience Center, 6001 Executive Blvd., Room 6154, MSC 9609, Bethesda, MD 20892–9609, 301–443–6470.

This notice is being published less than 15 days prior to the meeting due to the timing limitations imposed by the review and funding cycle.

Name of Committee: National Institute of Mental Health Special Emphasis Panel.

Date: April 9, 1999.

Time: 8:30 a.m. to 5:00 p.m.

Agenda: To review and evaluate grant applications.

Place: River Inn, 924 25th Street, NW, Washington, DC 20037.

Contact Person: David Chananie, Phd, Scientific Review Administrator, Division of Extramural Activities, National Institute of Mental Health, NIH, Neuroscience Center, 6001 Executive Blvd., Rm. 6150, MSC 9608, Bethesda, MD 20892–9608, 301–443–1340.

This notice is being published less than 15 days prior to the meeting due to the timing limitations imposed by the review and funding cycle.

Name of Committee: National Institute of Mental Health Special Emphasis Panel.

Date: April 12, 1999.

Time: 3:30 p.m. to 4:30 p.m.

Agenda: To review and evaluate grant applications.

Place: Neuroscience Center, National Institutes of Health, 6001 Executive Blvd., Bethesda, MD 20892, (Telephone Conference Call).

Contact Person: Jack D. Maser, PhD, Scientific Review Administrator, Division of Extramural Activities, National Institute of Mental Health, NIH, Neuroscience Center, 6001 Executive Blvd., Room 6150, MSC 9608, Bethesda, MD 20892–9608, 301–443–1340.

This notice is being published less than 15 days prior to the meeting due to the timing limitations imposed by the review and funding cycle.

Name of Committee: National Institute of Mental Health Special Emphasis Panel.

Date: April 14, 1999.

Time: 12:30 p.m. to 2:30 p.m.

Agenda: To review and evaluate grant applications.

Place: River Inn, 924 25th Street, NW, Washington, DC 20037.

Contact Person: Jean G. Noronha, PhD, Scientific Review Administrator, Division of Extramural Activities, National Institute of Mental Health, NIH, Neuroscience Center, 6001 Executive Blvd., Room 6154, MSC 9609, Bethesda, MD 20892–9609, 301–443–6470.

This notice is being published less than 15 days prior to the meeting due to the timing limitations imposed by the review and funding cycle.

Name of Committee: National Institute of Mental Health Special Emphasis Panel.

Date: April 21, 1999.

Time: 8:30 a.m. to 5:00 p.m.

Agenda: To review and evaluate grant applications.

Place: Sheraton Crystal City Hotel, 1800 Jefferson Davis Highway, Arlington, VA 22202.

Contact Person: Jack D. Maser, PhD, Scientific Review Administrator, Division of Extramural Activities, National Institute of Mental Health, NIH, Neuroscience Center, 6001 Executive Blvd., Room 6150, MSC 9608, Bethesda, MD 20892–9608, 301–443–1340.

Name of Committee: National Institute of Mental Health Special Emphasis Panel.

Date: April 26, 1999.

Time: 12:00 p.m. to 1:00 p.m.

Agenda: To review and evaluate grant applications.

Place: Neuroscience Center, National Institutes of Health, 6001 Executive Blvd., Bethesda, MD 20892, (Telephone Conference Call).

Contact Person: Jack D. Maser, PhD, Scientific Review Administrator, Division of Extramural Activities, National Institute of Mental Health, NIH, Neuroscience Center, 6001 Executive Blvd., Room 6150, MSC 9608, Bethesda, MD 20892–9608, 301–443–1340.

(Catalogue of Federal Domestic Assistance Program Nos. 93.242, Mental Health Research Grants; 93.281, Scientist Development Award, Scientist Development Award for Clinicians, and Research Scientist Award; 93.282, Mental Health National Research Service Awards for Research Training, National Institutes of Health, HHS)

Dated: March 25, 1999.

LaVerne Y. Stringfield,

Committee Management Officer, NIH.

[FR Doc. 99–7998 Filed 3–31–99; 8:45 am]

BILLING CODE 4140–01–M

DEPARTMENT OF HEALTH AND HUMAN SERVICES

National Institutes of Health

National Library of Medicine; Notice of Closed Meeting

Pursuant to section 10(d) of the Federal Advisory Committee Act, as amended (5 U.S.C. Appendix 2), notice is hereby given of a meeting of the Board of Scientific Counselors, National Center for Biotechnology Information, National Library of Medicine.

The meeting will be closed to the public as indicated below in accordance with the provisions set forth in section 552b(c)(6), Title 5 U.S.C., as amended for the review, discussion, and evaluation of individual intramural programs and projects conducted by the NATIONAL LIBRARY OF MEDICINE, including consideration of personnel qualifications and performance, and the competence of individual investigators, the disclosure of which would constitute a clearly unwarranted invasion of personal privacy.

Name of Committee: Board of Scientific Counselors, National Center for Biotechnology Information, National Library of Medicine.

Date: May 17–18, 1999.

Time: May 17, 1999, 7:00 p.m. to 10:00 p.m.

Agenda: To review and evaluate personal qualifications and performance, and competence of individual investigators.

Place: The Hyatt Regency Hotel, 100 Bethesda Metro Center, Bethesda, MD 20814.

Time: May 18, 1999, 8:30 a.m. to 2:00 p.m.

Agenda: To review and evaluate personal qualifications and performance, and competence of individual investigators.

Place: National Library of Medicine, 8600 Rockville Pike, Board Room, Bethesda, MD 20894.

Contact Person: David J. Lipman, MD, Director, Natl Ctr for Biotechnology Information, National Library of Medicine, Department of Health and Human Services, Bethesda, MD 20894.

(Catalogue of Federal Domestic Assistance Program Nos. 93.879, Medical Library Assistance, National Institutes of Health, HHS)

Dated: March 25, 1999.

LaVerne Y. Stringfield,

Committee Management Officer, NIH.

[FR Doc. 99–7997 Filed 3–31–99; 8:45 am]

BILLING CODE 4140–01–M

DEPARTMENT OF HEALTH AND HUMAN SERVICES

Substance Abuse and Mental Health Services Administration

Agency Information Collection Activities: Submission for OMB Review; Comment Request

Periodically, the Substance Abuse and Mental Health Services Administration (SAMHSA) will publish a list of information collection requests under OMB review, in compliance with the Paperwork Reduction Act (44 U.S.C. Chapter 35). To request a copy of these documents, call the SAMHSA Reports Clearance Officer on (301)443–7978.

GPRA Client Outcomes for the Substance Abuse and Mental Health Services Administration (SAMHSA)

NEW—The mission of the Substance Abuse and Mental Health Services Administration (SAMHSA) is to improve the effectiveness and efficiency of substance abuse and mental health treatment and prevention services across the United States. All of SAMHSA's activities are designed to ultimately reduce the gap in the availability of substance abuse and mental health services and to improve their effectiveness and efficiency.

Data will be collected from all grantees under four Fiscal Year 1998 grant programs of the Center for Substance Abuse Treatment and from all SAMHSA knowledge development and application and targeted capacity expansion grants and contracts where client outcomes are to be assessed at intake and post-treatment beginning in Fiscal Year 1999. SAMHSA-funded projects will be required to submit this data as a contingency for their award. The analysis of the data will also help determine whether the goal of reducing health and social costs of drug use to the public is being achieved.

The primary purpose of the proposed data collection activity is to meet the reporting requirements of the Government Performance Review Act (GPRA) (Public Law 103–62) by allowing SAMHSA to quantify the effects and accomplishments of SAMHSA programs. In addition, the data will be useful in addressing goals and objectives outlined in ONDCP's *Performance Measures of Effectiveness*. Following is the estimated annual response burden for this effort.

Center	Number of clients	Responses/ client	Hours/ response	Annual burden hours
Center for Substance Abuse Treatment	3,750	3	.70	2,625
Center for Substance Abuse Prevention	12,150	3	.63	7,654
Center for Mental Health Services	13,837	3	.25	3,459
TOTAL				13,738

Written comments and recommendations concerning the proposed information collection should be sent within 30 days of this notice to: Daniel Chenok, Human Resources and Housing Branch, Office of Management and Budget, New Executive Office Building, Room 10235, Washington, DC 20503.

Dated: March 25, 1999.

Richard Kopanda,

Executive Officer, SAMHSA.

[FR Doc. 99–8009 Filed 3–31–99; 8:45 am]

BILLING CODE 4162–20–P

DEPARTMENT OF HOUSING AND URBAN DEVELOPMENT

[Docket No. FR–4491–N–01]

Draft Environmental Impact Statement: City of Hartford, CT; Section 108 Loan Guarantee/BEDI Grant

AGENCY: Office of the Assistant Secretary for Community Planning and Development, HUD.

ACTION: Notice.

SUMMARY: The Department of Housing and Urban Development gives this notice to the public that the City of Hartford, Connecticut intends to prepare an Environmental Impact Statement (EIS) for the Adriaen's Landing Project, which, among other components, includes a 68,000 person open-air stadium in the city of Hartford, Connecticut.

This Notice is in accordance with regulations of the Council on Environmental Quality as described in 40 CFR parts 1500–1508. Federal agencies having jurisdiction by law, special expertise, or other special interest should report their interests and indicate their readiness to aid in the EIS effort as a ''Cooperating Agency.''

A Draft Environmental Impact Statement will be completed for the proposed action described herein. Comments relating to the Draft EIS are requested and will be accepted by the contact person listed below. When the Draft EIS is completed, a notice will be sent to individuals and groups known to have an interest on the Draft EIS and particularly on the environmental impact issues identified therein. Any person or agency interested in receiving a notice and making comment on the Draft EIS should contact the person listed below.

ADDRESSES: All interested agencies, groups and persons are invited to submit written comments on the within-named project and the Draft Environment Impact Statement to the

following contact person. Such comments should be received by the office of the contact person and all comments so received will be considered prior to the preparation and distribution of the Draft Environmental Impact Statement.

Particularly solicited is information on reports or other environmental studies planned or completed in the project area, major issues and date which the EIS should consider and recommended mitigating measures and alternatives associated with the proposed project. Federal agencies having jurisdiction by law, special expertise or other special interest should report their interests and indicate their readiness to aid the EIS effort as a ''cooperating agency''.

FOR FURTHER INFORMATION CONTACT: Dennis J. Johnson, Contract Manager, City of Hartford, Division of Management & Budget, Office of Grants Management, Room 108, 550 Main Street, Hartford, Connecticut, 06103. Telephone: (860) 543–8650.

SUPPLEMENTARY INFORMATION: The City of Hartford, acting on behalf of the U.S. Department of Housing and Urban Development, in cooperation with the Capital City Economic Development Authority, the Federal Highway Administration, and other interested agencies will prepare an Environmental Impact Statement (EIS) to analyze potential impacts of constructing a 40-acre mixed use development complex including: (1) An entertainment/retail venue of approximately 426,000 square feet, (2) an approximately 68,000 person capacity open air stadium, (3) an approximately 200,000 square feet convention center, (4) an approximately 700-room convention center hotel, (5) an NFL pavilion for theme dining, interactive entertainment and other non-football business, (6) an interactive Connecticut River Discovery Center (aquarium/history museum, (7) approximately 350 residential apartments with some retail frontage, (8) an approximately 350-room business hotel, (9) parking facilities representing approximately 7,500 spaces, (10) relocation and modification of sewer, water, and other utility infrastructure and vehicular and pedestrian traffic access modifications. Adriaen's Landing will be located in downtown Hartford along the Connecticut River. The estimated cost for this project is 1.3 billion dollars.

The City of Hartford has been awarded a Brownfield Economic Development Initiative (BEDI) grant from the DHUD which will help with the costs associated with site preparation activities. The grant funds will be combined with up to $13 million in the Section 108 loan authority, $5 million of which will be specifically used in conjunction with the BEDI funds on the entertainment/retail component of the project.

The remaining $8 million will be used for eligible activities associated with the project. DHUD funds will not be used to support the stadium. Seven acres of the 40-acre development are air rights over Interstate 91 and the Whitehead Highway. The Federal Highway Administration would need to approve the use of this air space and will, therefore, be a cooperating agency.

To ensure that a full range of issues related to this proposed action are addressed and all significant issues identified, comments and suggestions are invited from all interested parties.

An information open house followed by a scoping meeting will be held on Thursday, April 15, 1999 at Betances School, 42 Charter Oak Avenue, Hartford, CT 06103. The open house will be held from 5–7 p.m. followed by the scoping meeting from 7–9 p.m. The scoping is for determining the scope of issues to be addressed in the EIS and for identifying the significant issues related to the proposed Adriaen's Landing project.

Need For the EIS

It has been determined that the project may constitute an action significantly effecting the quality of the human environment, and an Environmental Impact Statement will be prepared by the City of Hartford in cooperation with the Capital City Economic Development Authority in accordance with the National Environmental Policy Act of 1969 (Pub. L. 91–190) on such project.

Responses to this notice will be used to:

1. Determine significant environmental issues;
2. Identify data which the EIS should address; and
3. Identify agencies and other parties which will participate in the EIS process and the basis for their involvement.

This notice is in accordance with the regulations of the Council on Environmental Quality under its rule (40 CFR part 1500).

The Draft Environmental Impact Statement will be published and distributed about August 9, 1999 and a copy will be on file at the City of Hartford, Division of Management and Budget, Room 108, 550 Main Street, Hartford, CT 06103 and available for public inspection, or copies may be attained at the same address, upon request.

Scoping

This notice is part of the process used for scoping the EIS. Responses will help determine significant environmental issues, identify data which the EIS should address, and help identify cooperating agencies.

The Draft Environmental Impact Statement will be published upon completion and will be on file, and available for public inspection at the address listed above. Copies may also be obtained upon request, at the same address.

This Notice shall be in effect for one year. If one year after the publication of the Notice in the **Federal Register** a draft EIS has not been filed on the project, then the Notice for that project shall be cancelled. If a draft EIS is expected more than one year after the publication of this Notice, a new and updated Notice must be published.

Dated: March 26, 1999.

Richard H. Broun,

Director, Office of Community Viability.

[FR Doc. 99–8056 Filed 3–31–99; 8:45 am]

BILLING CODE 4210–29–P

DEPARTMENT OF HOUSING AND URBAN DEVELOPMENT

[Docket No. FR–4170–N–19]

RIN 2577–AB74

Indian Housing Block Grant Program: Notice of Revision to Transition Requirements—Proceeds of Sales of Former 1937 Act Homeownership Units

AGENCY: Office of the Assistant Secretary for Public and Indian Housing, HUD.

ACTION: Notice of revised transition requirements—proceeds of sales of former 1937 Act homeownership units.

SUMMARY: This notice provides additional and updated guidance relating to the sale of homeownership units and to cash management and investment policies and procedures. The purpose of this guidance is to facilitate the smooth transition from procedures and resources under the United States Housing Act of 1937 (1937 Act) to those under the Indian Housing Block Grant (IHBG) Program.

DATES: These transition requirements are effective upon publication.

FOR FURTHER INFORMATION CONTACT: Deborah M. Lalancette, National Office of Native American Programs, Department of Housing and Urban

Development, 1999 Broadway, Suite 3390, Denver, CO; telephone (303) 675–1600 (this is not a toll-free number). Hearing or speech-impaired individuals may access this number via TTY by calling the toll-free Federal Information Relay Service at 1–800–877–8339.

SUPPLEMENTARY INFORMATION:

I. Background

The Native American Housing Assistance and Self-Determination Act of 1996 (25 U.S.C. 4101 *et seq.*) (NAHASDA) was enacted on October 26, 1996, and took effect on October 1, 1997. NAHASDA requires HUD to make grants on behalf of Indian tribes to carry out affordable housing activities. A final rule to implement NAHASDA and establish the IHBG Program was published on March 12, 1998, (63 FR 12334), with an effective date of April 13, 1998.

NAHASDA also required the publication of a notice in the **Federal Register** to establish any requirements necessary for the transition from the provision of assistance for Indian tribes and Indian housing authorities under the 1937 Act and other related provisions of law to the provision of assistance in accordance with NAHASDA. An initial transition notice was published on January 27, 1997 (62 FR 3972), with revisions published on February 24, 1997 (62 FR 8258), January 27, 1998 (63 FR 4076), April 15, 1998 (63 FR 18804), and October 2, 1998 (63 FR 53084).

This revision to the transition notice requirements addresses the treatment of proceeds from the sale of homeownership units. Question 42 in the transition notice revision published on January 27, 1998 treated proceeds from the sale of homeownership units the same as rental and homeownership operating reserves, mutual help equity accounts under the Mutual Help Homeownership Opportunity Program, and earned home payment accounts under the Turnkey III programs for purposes of section 210 of NAHASDA. Section 210 states that any funds for programs for low-income housing under the United States Housing Act of 1937 that, on the date of the applicability of NAHASDA, are owned by, or in the possession or under the control of, the IHA for the tribe, including all reserves not otherwise obligated, shall be considered assistance under NAHASDA and subject to the NAHASDA provisions relating to use of such assistance.

In response to inquiries, HUD has reconsidered Question 42 and determined that section 210 of NAHASDA does not apply to the proceeds from the sale of homeownership units. The purpose of the statutory requirement for the transition notice is to facilitate the transition from the 1937 Act programs to the IHBG program. Proceeds of sale of homeownership units under the 1937 Act are not characterized as program income under the IHBG regulation. By providing that the proceeds can be used for any housing activity, community facility, or economic development activity and are not subject to other Federal requirements, HUD is seeking to expedite the smooth transition to the IHBG program. Accordingly, Question 42 is amended by this notice to remove the reference to homeownership unit sales proceeds, and Questions 42A and 42B are added to provide guidance on the treatment of these proceeds.

In addition to addressing homeownership unit sales proceeds, this notice also revises Question 46 to extend and clarify the applicability of PIH Notice 96–33 to cash management and investment policies and procedures.

II. Revisions to the January 27, 1998 Transition Notice

Accordingly, FR Doc. 98–1939, the Indian Housing Block Grant Program—Revised Notice of Transition Requirements, published in the **Federal Register** January 27, 1998, 63 FR 4076, is amended as follows:

1. On page 4085, in column 3, Question 42 and Answer 42 are revised to read as follows:

Question 42. What happens to rental and homeownership operating reserves, mutual help equity accounts under the Mutual Help Homeownership Opportunity Program, and earned home payment accounts under the Turnkey III program?

Answer 42. Section 210 of NAHASDA states that any funds for programs for low-income housing under the United States Housing Act of 1937 that, on the date of the applicability of the Act, are owned by, or in the possession or under the control of, the IHA for the tribe, including all reserves not otherwise obligated, shall be considered assistance under the Act and subject to the provisions of this Act relating to use of such assistance. In other words, the funds are considered assistance under NAHASDA and are subject to NAHASDA requirements. The funds in the accounts are also subject to existing agreements with the homebuyers.

2. On page 4085, in column 3, a new Question 42A and Answer 42A are added to read as follows:

Question 42A. Can proceeds from the sale of homeownership units be used for purposes other than eligible NAHASDA activities?

Answer 42A. Yes. We have determined that section 210 of NAHASDA addresses only the 1937 Act funds provided by HUD and not the proceeds from the sale of homeownership units. Proceeds can be used for any housing activity, community facility or economic development activity that benefits the community. If the use of these funds is currently outlined in an Administrative Use Agreement, the Agreement can be terminated at the request of the Indian Housing Authority (or successor entity). The funds can then be used for any housing activity, community facility or economic development activity.

3. On page 4085, in column 3, a new Question 42B and Answer 42B are added to read as follows:

Question 42B. What Federal requirements would apply to the proceeds from the sale of homeownership units?

Answer 42B. The use of proceeds are not subject to any Federal requirements, except that the funds must be used for the activities set forth in Answer 42A.

4. On page 4086, in column 1, Answer 46 is revised to read as follows (Question 46 is republished for the convenience of readers):

Question 46. What cash management and investment policies and procedures are in effect as of October 1, 1997?

Answer 46. Current procedures outlined in PIH Notice 96–33 (HA) dated June 4, 1996, extended by Notice 98–46 (HA) dated September 1, 1998, titled ''Required HA Cash Management and Investment Policies and Procedures'' will continue to apply to 1937 Act funds which are held in reserve accounts until further notice. Please note, however, that sections 7(c) and 8 of Notice 98–46 do not apply to 1937 Act funds. Also, the limit on maturity dates outlined in section 6 of Notice 96–33 does not apply.

Authority: 25 U.S.C. 4116(a).

Dated: March 26, 1999.

Harold Lucas,

Assistant Secretary for Public and Indian Housing.

[FR Doc. 99–8030 Filed 3–29–99; 2:09 pm]

BILLING CODE 4210–33–P

DEPARTMENT OF THE INTERIOR

Fish and Wildlife Service

Notice of Receipt of Applications for Permit

The following applicants have applied for a permit to conduct certain

activities with endangered species. This notice is provided pursuant to Section 10(c) of the Endangered Species Act of 1973, *as amended* (16 U.S.C. 1531, *et seq.*):

PRT–009261

Applicant: Arizona State University, Tempe, AZ

The applicant requests a permit to import DNA samples of mantled howler monkeys (*Alouatta palliatta*) from Costa Rica. Samples were collected from animals as part of a study on wild populations authorized by the Government of Costa Rica. This notice covers activities conducted by the applicant for a period of five years.

PRT–843425

Applicant: Nashville Zoo, Joelton, TN

The applicant requests a permit to export two captive born White tigers (*Panthera tigris*) to the Cango Wildlife Ranch, Oudtshoorn, South Africa for the purpose of enhancement of the survival of the species through conservation education.

PRT–008720

Applicant: Steig Johnson, Berkeley, CA

The applicant requests a permit in affiliation with the University of Texas, to import blood and hair samples from Brown lemurs (*Eulemur fulvus*) collected in the wild in Madagascar, for the purpose of scientific research.

PRT–009565

Applicant: Fort Worth Zoological Gardens, Fort Worth, TX

The applicant requests a permit to import one male and one female captive-born Indochinese tigers (*Panthera tigris corbetti*) from the Singapore Zoological Gardens, Singapore for the purpose of enhancement of the survival of the species through captive propagation.

PRT–009590

Applicant: Indianapolis Zoological Society, Inc., Indianapolis, IN

The applicant requests a permit to import two wild and two captive-bred Grand Cayman ground iguana (*Cyclura nubila lewisi*) from the National Trust for the Cayman Islands, Cayman Islands, British West Indies for the purpose of enhancement of the survival of the species through captive propagation.

Written data or comments should be submitted to the Director, U.S. Fish and Wildlife Service, Office of Management Authority, 4401 North Fairfax Drive, Room 700, Arlington, Virginia 22203 and must be received by the Director within 30 days of the date of this publication.

The public is invited to comment on the following applications for a permit to conduct certain activities with marine mammals. The applications were submitted to satisfy requirements of the Marine Mammal Protection Act of 1972, *as amended* (16 U.S.C. 1361 *et seq.*) and the regulations governing marine mammals (50 CFR 18).

PRT–835367

Applicant: Joseph Cavallaro, Frankford, WV

The applicant requests a permit to import a polar bear (*Ursus maritimus*) sport-hunted from the Lancaster Sound polar bear population, Northwest Territories, Canada for personal use.

PRT–009656

Applicant: Daniel L. Heyne, Coldwater, OH

The applicant requests a permit to import a polar bear (*Ursus maritimus*) sport-hunted from the Northern Beaufort Sea polar bear population, Northwest Territories, Canada for personal use.

PRT–009133

Applicant: John J. Jackson III, Metairie, LA

The applicant requests a permit to import a polar bear (*Ursus maritimus*) sport-hunted from the Lancaster Sound polar bear population, Northwest Territories, Canada for personal use.

Written data or comments, requests for copies of the complete application, or requests for a public hearing on this application should be sent to the U.S. Fish and Wildlife Service, Office of Management Authority, 4401 N. Fairfax Drive, Room 700, Arlington, Virginia 22203, telephone 703/358–2104 or fax 703/358–2281 and must be received within 30 days of the date of publication of this notice. Anyone requesting a hearing should give specific reasons why a hearing would be appropriate. The holding of such a hearing is at the discretion of the Director.

Documents and other information submitted with the application are available for review, *subject to the requirements of the Privacy Act and Freedom of Information Act*, by any party who submits a written request for a copy of such documents to the above address within 30 days of the date of publication of this notice.

Dated: March 26, 1999.

MaryEllen Amtower,

Acting Chief, Branch of Permits, Office of Management Authority.

[FR Doc. 99–8002 Filed 3–31–99; 8:45 am]

BILLING CODE 4310–55–P

DEPARTMENT OF THE INTERIOR

Fish and Wildlife Service

Aquatic Nuisance Species Task Force Study

AGENCY: Fish and Wildlife Service, Interior.

ACTION: Notice of availability of report and request for comments.

SUMMARY: This notice announces the availability of the *Ballast Exchange Study: Consideration of Back-Up Exchange Zones and Environmental Effects of Ballast Exchange and Ballast Release* and requests comments as to its scientific and technical accuracy and completeness. In addition, comments are requested on whether the ballast exchange study on which the report is based can be adopted as fulfilling the requirements of section 1102(a)(1) of the Nonindigenous Aquatic Nuisance Prevention and Control Act of 1990.

DATES: Comments on the Report and whether the Ballast Exchange Study requirements of the Act have been met are requested by May 3, 1999.

ADDRESSES: Copies of the Report can be obtained from the Aquatic Nuisance Species Task Force, 4401 North Fairfax Drive, Suite 851, Arlington, Virginia 22203–1622. Comments should be sent to the same address..

FOR FURTHER INFORMATION CONTACT: Robert A. Peoples, Executive Secretary, Aquatic Nuisance Species Task Force at 703–358–2025 or by e-mail at: robert__peoples@fws.gov.

SUPPLEMENTARY INFORMATION: Section 1102(a)(1) of the Nonindigenous Aquatic Nuisance Prevention and Control Act of 1990 (16 U.S.C. 4712(a)(1)) directs the Aquatic Nuisance Species Task Force established by that statute to conduct a Ballast Exchange Study. The purposes of the Study are to (1) assess the environmental effects of ballast water exchange on the diversity and abundance of native species in U.S. waters and (2) identify areas in U.S. waters and the Exclusive Economic Zone where ballast exchange is not likely to result in new infestations of nonindigenous species nor spread aquatic nuisance species.

In 1993, scientists with extensive experience studying biological invasions, including ballast water, proposed to the u.S. Environmental Protection Agency (EPA) and National Oceanic and Atmospheric Administration (NOAA) that those agencies fund a ballast exchange study. Although both agencies are represented on the ANS Task Force and Task Force staff were aware of the proposal, the

ANS Task Force did not commission the study. The principal investigators assembled a team of biological invasion scientists and physical oceanographers to conduct a study and submitted their report to the ANS Task Force and NOAA in November 1998. Both EPA and NOAA have accepted the report and authorized its release.

The ANS Task Force is now considering whether to adopt this volunteered study as fulfilling its responsibilities under section 1102(a)(1) of the Act (16 U.S.C. 4712(a)(1)). A key factor in those deliberations is the scientific and technical accuracy and completeness of the November 1998 report of the volunteered study.

Dated: March 26, 1999.

Hannibal Bolton,

Acting Co-Chair, Aquatic Nuisance Species Task Force, Acting Assistant Director—Fisheries.

[FR Doc. 99–7976 Filed 3–31–99; 8:45 am]

BILLING CODE 4310–55–M

DEPARTMENT OF THE INTERIOR

Bureau of Land Management

[OR–125–08–1430–00; GP9.–0148 ; OR 53620]

Notice of Realty Action: Direct Sale of Public Land in Coos County, Oregon

AGENCY: Bureau of Land Management (BLM), Interior.

ACTION: Correction notice.

SUMMARY: In **Federal Register**, Volume 63, Page 70419, Number 244 of Monday, December 21, 1998, Notices, under the **SUMMARY** heading, add the following paragraph: The mineral interest being offered for conveyance have no known mineral values and may be conveyed simultaneously, in accordance with Section 209 of the Federal Land Policy and Management Act. Acceptance of the direct sale offer will qualify the purchaser to make application for conveyance of those mineral interests. Purchasers must submit a non refundable $50.00 filing fee for the conveyance of the mineral estate upon request by the Bureau of Land Management.

Dated: March 23, 1999.

Sue E. Richardson,

District Manager.

[FR Doc. 99–8031 Filed 3–31–99; 8:45 am]

BILLING CODE 4310–84–P

DEPARTMENT OF THE INTERIOR

Bureau of Land Management

[OR–030–09–1220–04:GP9–0129]

Notice of Special Recreation Permit Requirements, Wallowa/Grande Ronde Rivers

AGENCY: Bureau of Land Management, Interior, Vale District Baker Resource Area.

ACTION: Notice of Special Recreation Permit Requirements, Wallowa/Grande Ronde Rivers, Oregon and Washington.

SUMMARY: Withdrawn.

Additional Information

Federal Register Notice #OR–030–09–1220–04:GP9–0996 (64 FR 9347, Feb. 25, 1999), is withdrawn. New regulations regarding the permit system for the Wallowa/Grande Ronde Rivers will be forthcoming.

FOR FURTHER INFORMATION CONTACT: Baker Resource Area, 3165 10th St., Baker City, Oregon 97814, Telephone (541) 523–1256.

Penelope J. Woods,

Baker Resource Area Manager.

[FR Doc. 99–8032 Filed 3–31–99; 8:45 am]

BILLING CODE 4310–33–M

DEPARTMENT OF THE INTERIOR

Bureau of Land Management

[AZ–930–1430–01; AZA–30820]

Notice of Proposed Withdrawal; Arizona

AGENCY: Bureau of Land Management, Interior.

ACTION: Notice; Correction.

SUMMARY: In a notice published in the **Federal Register** December 14, 1998, the Secretary of the Interior proposed to withdraw approximately 605,350 acres of Federal lands and minerals to protect the native biodiversity and the ecological richness of the Shivwits Plateau area in northwestern Arizona. The document contained five legal description errors.

In the **Federal Register** issue of December 14, 1998, in FR Doc. 98–33046: (1) On page 68789, in the ninth line, add (Private Surface). (2) On page 68789, in the thirteenth line, change the SE¼ to the NE¼ to read: Sec. 10, NE¼, N½NW¼, SE¼NW¼, and S½; 600.00 acres. (3) On page 68790, in the forty second line, change S¼ to S½ to read: Sec. 5, lots 1 to 4, inclusive, S½N½ and S½; (Non-Federal Subsurface) 633.84 acres. (4) On page 68792, in the fifteenth line from the bottom, add E½ to read: Sec. 29, E½E½; (Non-Federal Surface and Federal Subsurface) 180.10 acres. (5) On page 68794, in the third line from the bottom, add NE¼SE¼ to read: Sec. 2, lot 4, S½NW¼, N½SE¼, SW¼SE¼; (State Surface and Subsurface) 237.42 acres.

FOR FURTHER INFORMATION CONTACT: Roger G. Taylor, Field Manager, Arizona Strip Field Office, 345 East Riverside Drive, St. George, Utah 84790, (435) 688–3200.

Dated: February 16, 1999.

Roger G. Taylor,

Arizona Strip Field Manager.

[FR Doc. 99–7970 Filed 3–31–99; 8:45 am]

BILLING CODE 4310–32–P

DEPARTMENT OF THE INTERIOR

Minerals Management Service

Agency Information Collection Activities: Submission for Office of Management and Budget Review; Comment Request

AGENCY: Minerals Management Service (MMS), Interior.

ACTION: Notice of extension of a currently approved information collection.

SUMMARY: As part of its continuing effort to reduce paperwork and respondent burden, MMS invites the public and other Federal agencies to comment on a proposal to extend the currently approved collection of information discussed below. The Paperwork Reduction Act of 1995 (PRA) provides that an agency may not conduct or sponsor, and a person is not required to respond to, a collection of information unless it displays a currently valid Office of Management and Budget (OMB) control number.

DATES: Submit written comments by May 3, 1999.

ADDRESSES: Submit comments and suggestions directly to the Office of Information and Regulatory Affairs, OMB, Attention: Desk Officer for the Department of the Interior (OMB Control Number 1010–0118), 725 17th Street, NW, Washington, DC 20503. Send a copy of your comments to the Minerals Management Service, Attention: Anne Ewell, Mail Stop 4024, 381 Elden Street, Herndon, Virginia 20170–4817.

FOR FURTHER INFORMATION CONTACT: For questions concerning the electronic spreadsheets, please contact Larry Barker, Division of Verification, telephone (303) 231–3157, FAX (303)

231–3189, e-mail address: Lawrence.Barker@mms.gov. For questions concerning this collection of information, please contact Anne Ewell, Royalty-in-Kind Study Team, telephone (703) 787–1584. You may also obtain copies of this collection of information by contacting MMS's Information Collection Clearance Officer at (202) 208–7744.

SUPPLEMENTARY INFORMATION:

Title: Royalty-in-Kind (RIK) Pilot Program Spreadsheets: Federal Oil and Gas Purchase System and Joint Effort—Royalty Oil and Gas Purchase System.

Abstract: The Secretary of the Interior, under the Mineral Leasing Act (30 U.S.C. 192) and the Outer Continental Shelf Lands Act (43 U.S.C. 1353), is responsible for the management of royalties on minerals produced from leased Federal lands. MMS carries out these responsibilities for the Secretary. The Report of Sales and Royalty Remittance, Form MMS–2014, is the only document used by MMS's automated Auditing and Financial System (AFS) to input royalty-related financial data from lessees, payors, and purchasers. MMS has undertaken several pilot programs to study the feasibility of taking the Government's royalty in the form of production, that is, as RIK. MMS has made available at no cost two versions of an electronic spreadsheet for RIK purchasers to use to simply create an electronic Form MMS–2014 to accompany their payments for Federal RIK, since they will not need to use the full range of reporting instructions and methods on the form.

MMS will use the information to conduct its automated accounting, verification, and distribution activities and to support disbursement of royalty revenues to the Treasury and States that have an interest in Federal revenues. MMS will protect proprietary information submitted on Form MMS–2014 under applicable Department regulations at 43 CFR part 2. No items of a sensitive nature are collected. The requirement to respond is mandatory.

Burden Statement: The reporting burden is estimated to average 2 minutes per response (line of data) including the time for reviewing the instructions, gathering and maintaining the data, entering the data on the spreadsheets, and reviewing the output—a completed Form MMS–2014.

This collection of RIK purchaser information represents a significant net reduction in burden compared to the collection of information on in-value transactions. While a few new companies may report, the overall number of respondents is greatly reduced. This is because only one purchaser need report one or two lines of data on aggregated volumes from a multi-lease property, rather than multiple lessee/producers each reporting at the detailed revenue source level that in-value royalty payments would require for the same properties. The electronic spreadsheets automatically allocate data needed by MMS to revenue source levels on Form MMS–2014, reducing complexity of reporting. This is made possible because MMS enters necessary reference data (e.g., ownership percentages) into the spreadsheets before providing them to purchasers. Further, the spreadsheet for joint Federal and State production will also automatically create a report acceptable to the State of Wyoming for production from properties offered jointly by MMS and the State.

On November 27, 1998, MMS published a 60-day **Federal Register** Notice (63 FR 65610) soliciting comments on using the optional electronic spreadsheets (both Federal only and joint Federal and State versions) to create a Form MMS–2014 when reporting purchases of the Government's royalty oil. Although the spreadsheets were in use before and during the comment period, no comments were received. However, during contact with purchasers in the Wyoming Pilot I, Phase 1, MMS found that the purchasers were pleased with the new process. Purchasers preferred MMS's electronic spreadsheets to any other method. Additionally, those reporting on properties combining Federal and State production located in the State of Wyoming were particularly pleased that, once sufficient data to prepare a report to MMS had been entered for those agreements, the electronic spreadsheets automatically calculated and produced reports acceptable to the State.

Estimated Number of Respondents: 4 in year 1; 5 in year 2; and 10 in year 3.

Estimated Total Annual Burden on Respondents: 49 hours in year 1; 330 in year 2; and 330 in year 3.

Frequency of Collection: Monthly.

Comments: In calculating the burden, we assume that respondents perform many of the requirements and maintain records in the normal course of their activities. We consider these usual and customary and take that into account in estimating the burden.

(1) We specifically solicit your comments on the following questions:

(a) Is the proposed collection of information necessary for us to properly perform our functions and will it be useful?

(b) Are the estimates of the burden hours of the proposed collection reasonable?

(c) Do you have any suggestions that would enhance the quality, clarity, or usefulness of the information to be collected?

(d) Is there a way to minimize the information collection burden on respondents, including through the use of appropriate automated electronic, mechanical, or other forms of information technology?

(2) In addition, the PRA requires agencies to estimate the total annual reporting and recordkeeping ''cost'' burden to respondents or recordkeepers resulting from the collection of information. We need to know if you have costs associated with the collection of this information for either total capital and startup cost components or annual operation, maintenance, and purchase of service components. Your estimates should consider the costs to generate, maintain, and disclose or provide the information. You should describe the methods you use to estimate major cost factors, including system and technology acquisition, expected useful life of capital equipment, discount rate(s), and the period over which you incur costs. Capital and startup costs include, among other items, computers and software you purchase to prepare for collecting information; monitoring, sampling, drilling, and testing equipment; and record storage facilities. Generally, your estimates should not include equipment or services purchased: (i) Before October 1, 1995; (ii) to comply with requirements not associated with the information collection; (iii) for reasons other than to provide information or keep records for the Government; or (iv) as part of customary and usual business or private practices.

MMS Information Collection Clearance Officer: Jo Ann Lauterbach (202) 208–7744.

Dated: March 22, 1999.

Lucy Querques Denett,

Associate Director for Royalty Management.

[FR Doc. 99–7967 Filed 3–31–99; 8:45 am]

BILLING CODE 4310–MR–P

INTERNATIONAL TRADE COMMISSION

[(Invs. Nos. AA1921–143 (Review) and 731-TA–341, 343–345, 391–397, and 399 (Review))]

Certain Bearings From China, France, Germany, Hungary, Italy, Japan, Rroania, Singapore, Sweden, and the United Kingdom

AGENCY: United States International Trade Commission.

ACTION: Institution of five-year reviews concerning the antidumping duty orders on certain bearings from China, France, Germany, Hungary, Italy, Japan, Romania, Singapore, Sweden, and the United Kingdom.

SUMMARY: The Commission hereby gives notice that it has instituted reviews pursuant to section 751(c) of the Tariff Act of 1930 (19 U.S.C. 1675(c)) (the Act) to determine whether revocation of the antidumping duty orders on certain bearings from China, France, Germany, Hungary, Italy, Japan, Romania, Singapore, Sweden, and the United Kingdom would be likely to lead to continuation or recurrence of material injury. Pursuant to section 751(c)(2) of the Act, interested parties are requested to respond to this notice by submitting the information specified below to the Commission;[1] to be assured of consideration, the deadline for responses is May 21, 1999. Comments on the adequacy of responses may be filed with the Commission by June 14, 1999.

For further information concerning the conduct of these reviews and rules of general application, consult the Commission's Rules of Practice and Procedure, part 201, subparts A through E (19 CFR part 201), and part 207, subparts A, D, E, and F (19 CFR part 207). Recent amendments to the Rules of Practice and Procedure pertinent to five-year reviews, including the text of subpart F of part 207, are published at 63 FR 30599, June 5, 1998, and may be downloaded from the Commission's World Wide Web site at http://www.usitc.gov/rules.htm.

EFFECTIVE DATE: April 1, 1999.

FOR FURTHER INFORMATION CONTACT: Mary Messer (202–205–3193) or Vera Libeau (202–205–3176), Office of Investigations, U.S. International Trade Commission, 500 E Street SW, Washington, DC 20436. Hearing-impaired persons can obtain information on this matter by contacting the Commission's TDD terminal on 202–205–1810. Persons with mobility impairments who will need special assistance in gaining access to the Commission should contact the Office of the Secretary at 202–205–2000. General information concerning the Commission may also be obtained by accessing its internet server (http://www.usitc.gov).

SUPPLEMENTARY INFORMATION:

Background

On the dates listed below, antidumping duty orders were issued on the subject imports:

Order date	Product/country	Inv. No.	F.R. cite
8/18/76	Tapered roller bearings, 4″ and under/Japan	AA1921–143	41 F.R. 34974
6/15/87	Tapered roller bearings/China	731–TA–344	52 F.R. 22667
6/19/87	Tapered roller bearings/Hungary	731–TA–341	52 F.R. 23319
6/19/87	Tapered roller bearings/Romania	731–TA–345	52 F.R. 23320
10/6/87	Tapered roller bearings, over 4″/Japan	731–TA–343	52 F.R. 37352
5/15/89	Ball, cylindrical roller, and spherical plain bearings/Germany	731–TA–391	54 F.R. 20900
5/15/89	Ball, cylindrical roller, and spherical plain bearings/France	731–TA–392	54 F.R. 20902
5/15/89	Ball and cylindrical roller bearings/Italy	731–TA–393	54 F.R. 20903
5/15/89	Ball, cylindrical roller, and spherical plain bearings/Japan	731–TA–394	54 F.R. 20904
5/15/89	Ball bearings/Romania	731–TA–395	54 F.R. 20906
5/15/89	Ball bearings/Singapore	731–TA–396	54 F.R. 20907
5/15/89	Ball and cylindrical roller bearings/Sweden	731–TA–397	54 F.R. 20907
5/15/89	Ball and cylindrical roller bearings/United Kingdom	731–TA–399	54 F.R. 20910

The Commission is conducting reviews to determine whether revocation of the orders would be likely to lead to continuation or recurrence of material injury to the domestic industry within a reasonably foreseeable time. It will assess the adequacy of interested party responses to this notice of institution to determine whether to conduct full reviews or expedited reviews. The Commission's determinations in any expedited reviews will be based on the facts available, which may include information provided in response to this notice.

Definitions.—The following definitions apply to these reviews:

(1) Subject Merchandise is the class or kind of merchandise that is within the scope of the five-year reviews, as defined by the Department of Commerce.

[1] No response to this request for information is required if a currently valid Office of Management and Budget (OMB) number is not displayed; the OMB number is 3117–0016/USITC No. 99–5–002, expiration date June 30, 1999. Public reporting burden for the request is estimated to average 7 hours per response. Please send comments regarding the accuracy of this burden estimate to the Office of Investigations, U.S. International Trade Commission, 500 E Street, SW, Washington, DC 20436.

(2) The Subject Countries in these reviews are China, France, Germany, Hungary, Italy, Japan, Romania, Singapore, Sweden, and the United Kingdom.

(3) The Domestic Like Product is the domestically produced product or products which are like, or in the absence of like, most similar in characteristics and uses with, the *Subject Merchandise.* In its original determination concerning tapered roller bearings, 4 inches & under from Japan (Inv. No. AA1921–143), the Commission did not specifically define the Domestic Like Product; *however, in its original determinations concerning tapered roller bearings, over 4 inches from Japan (Inv. No. 731–TA–343) and tapered roller bearings from Hungary, China, and Romania (Invs. Nos. 341, 344, and 345), the Commission found one Domestic Like Product:* tapered roller bearings and parts thereof—finished or unfinished; flange, take-up cartridge, and hanger units incorporating tapered roller bearings, and tapered roller housings (except pillow blocks) incorporating tapered rollers, with or without spindles, and whether or not for automotive use. In its original determinations concerning antifriction bearings (other than tapered roller bearings) and parts thereof from Germany, France, Italy, Japan, Romania, Singapore, Sweden, and the United Kingdom (Investigations Nos. 731–TA–391–397 and 399), the Commission made affirmative determinations with respect to each of the following three Domestic Like Products: (1) ball bearings, (2) cylindrical roller bearings, and (3) spherical plain bearings. One Commissioner defined the Domestic Like Product differently. For purposes of this notice, you should report information separately on each of the following six Domestic Like Products: (1) tapered roller bearings, (2) tapered roller bearings, 4 inches and under, (3) tapered roller bearings, over 4 inches, (4) ball bearings, (5) cylindrical roller bearings, and (6) spherical plain bearings.

(4) The Domestic Industry is the U.S. producers as a whole of the Domestic Like Product, or those producers whose collective output of the Domestic Like Product constitutes a major proportion of the total domestic production of the product. In its original determination concerning tapered roller bearings, 4 inches & under from Japan (Inv. No. AA1921–143), the Commission did not specifically define the Domestic Industry; however, in its original determinations concerning tapered roller bearings, over 4 inches from Japan (Inv. No. 731–TA–343) and tapered roller bearings from Hungary, China, and Romania (Invs. Nos. 341, 344, and 345), the Commission found one Domestic Industry devoted to the production of the Domestic Like Product, as defined above. In its original determinations concerning antifriction bearings (other than tapered roller bearings) and parts thereof from Germany, France, Italy, Japan, Romania, Singapore, Sweden, and the United Kingdom (Investigations Nos. 731–TA–391–397 and 399), the Commission made affirmative determinations with respect to three Domestic Industries, each devoted to the production of one of the three Domestic Like Products, as defined above. One Commissioner defined the Domestic Industry differently. For purposes of this notice, you should report information on six Domestic Industries, each devoted to the production of one of the following six Domestic Like Products: (1) tapered roller bearings, (2) tapered roller bearings, 4 inches and under, (3) tapered roller bearings, over 4 inches, (4) ball bearings, (5) cylindrical roller bearings, and (6) spherical pl ain bearings.

(5) The Order Dates are the dates that the antidumping duty orders under review became effective. In these reviews, the Order Dates are as shown in the preceding tabulation.

(6) An Importer is any person or firm engaged, either directly or through a parent company or subsidiary, in importing the Subject Merchandise into the United States from a foreign manufacturer or through its selling agent.

Participation in the Reviews and Public Service List

Persons, including industrial users of the Subject Merchandise and, if the merchandise is sold at the retail level, representative consumer organizations, wishing to participate in the reviews as parties must file an entry of appearance with the Secretary to the Commission, as provided in section 201.11(b)(4) of the Commission's rules, no later than 21 days after publication of this notice in the **Federal Register**. The Secretary will maintain a public service list containing the names and addresses of all persons, or their representatives, who are parties to the reviews.

Limited Disclosure of Business Proprietary Information (BPI) Under an Administrative Protective Order (APO) and APO Service List

Pursuant to section 207.7(a) of the Commission's rules, the Secretary will make BPI submitted in these reviews available to authorized applicants under the APO issued in the reviews, provided that the application is made no later than 21 days after publication of this notice in the **Federal Register**. Authorized applicants must represent interested parties, as defined in 19 U.S.C. 1677(9), who are parties to the reviews. A separate service list will be maintained by the Secretary for those parties authorized to receive BPI under the APO.

Certification

Pursuant to section 207.3 of the Commission's rules, any person submitting information to the Commission in connection with these reviews must certify that the information is accurate and complete to the best of the submitter's knowledge. In making the certification, the submitter will be deemed to consent, unless otherwise specified, for the Commission, its employees, and contract personnel to use the information provided in any other reviews or investigations of the same or comparable products which the Commission conducts under Title VII of the Act, or in internal audits and investigations relating to the programs and operations of the Commission pursuant to 5 U.S.C. Appendix 3.

Written Submissions

Pursuant to section 207.61 of the Commission's rules, each interested party response to this notice must provide the information specified below. The deadline for filing such responses is May 21, 1999. Pursuant to section 207.62(b) of the Commission's rules, eligible parties (as specified in Commission rule 207.62(b)(1)) may also file comments concerning the adequacy of responses to the notice of institution and whether the Commission should conduct expedited or full reviews. The deadline for filing such comments is June 14, 1999. All written submissions must conform with the provisions of sections 201.8 and 207.3 of the Commission's rules and any submissions that contain BPI must also conform with the requirements of sections 201.6 and 207.7 of the Commission's rules. The Commission's rules do not authorize filing of submissions with the Secretary by facsimile or electronic means. Also, in accordance with sections 201.16(c) and 207.3 of the Commission's rules, each document filed by a party to the reviews must be served on all other parties to the reviews (as identified by either the public or APO service list as appropriate), and a certificate of service must accompany the document (if you

are not a party to the reviews you do not need to serve your response).

Inability To Provide Requested Information

Pursuant to section 207.61(c) of the Commission's rules, any interested party that cannot furnish the information requested by this notice in the requested form and manner shall notify the Commission at the earliest possible time, provide a full explanation of why it cannot provide the requested information, and indicate alternative forms in which it can provide equivalent information. If an interested party does not provide this notification (or the Commission finds the explanation provided in the notification inadequate) and fails to provide a complete response to this notice, the Commission may take an adverse inference against the party pursuant to section 776(b) of the Act in making its determinations in the reviews.

Information To Be Provided in Response to This Notice of Institution

Please provide the requested information separately for each Domestic Like Product, as defined above, and for each of the products identified by Commerce as Subject Merchandise. If you are a domestic producer, union/worker group, or trade/business association; import/export Subject Merchandise from more than one Subject Country; or produce Subject Merchandise in more than one Subject Country, you may file a single response. If you do so, please ensure that your response to each question includes the information requested for each pertinent Subject Country. As used below, the term ''firm'' includes any related firms.

(1) The name and address of your firm or entity (including World Wide Web address if available) and name, telephone number, fax number, and E-mail address of the certifying official.

(2) A statement indicating whether your firm/entity is a U.S. producer of the Domestic Like Product to which your response pertains, a U.S. union or worker group, a U.S. importer of the Subject Merchandise, a foreign producer or exporter of the Subject Merchandise, a U.S. or foreign trade or business association, or another interested party (including an explanation). If you are a union/worker group or trade/business association, identify the firms in which your workers are employed or which are members of your association.

(3) A statement indicating whether your firm/entity is willing to participate in these reviews by providing information requested by the Commission.

(4) A statement of the likely effects of the revocation of the antidumping duty orders on each Domestic Industry for which you are filing a response in general and/or your firm/entity specifically. In your response, please discuss the various factors specified in section 752(a) of the Act (19 U.S.C. 1675a(a)) including the likely volume of subject imports, likely price effects of subject imports, and likely impact of imports of Subject Merchandise on the Domestic Industry.

(5) A list of all known and currently operating U.S. producers of each Domestic Like Product for which you are filing a response. Identify any known related parties and the nature of the relationship as defined in section 771(4)(B) of the Act (19 U.S.C. 1677(4)(B)).

(6) A list of all known and currently operating U.S. importers of the Subject Merchandise and producers of the Subject Merchandise in the Subject Countries that currently export or have exported Subject Merchandise to the United States or other countries since the years the petitions were filed. The Subject Merchandise, the Subject Countries, and the years the petitions were filed are listed below:

Subject merchandise/ Subject country	Years
Tapered roller bearings, 4″ & under/ Japan	1973
Tapered roller bearings/China, Hungary, and Romania	1986
Tapered roller bearings, over 4″ Japan	1986
Ball, cylindrical roller, and spherical plain bearings/France	1988
Ball, cylindrical roller, and spherical plain bearings/Germany	1988
Ball and cylindrical roller bearings/ Italy	1988
Ball, cylindrical roller, and spherical plain bearings/Japan	1988
Ball bearings/Romania	1988
Ball bearings/Singapore	1988
Ball and cylindrical roller bearings/ Sweden	1988
Ball and cylindrical roller bearings/ United Kingdom	1988

(7) If you are a U.S. producer of a Domestic Like Product, provide the following information separately on your firm's operations on each product during calendar year 1998 (report quantity data in thousands of units and value data in thousands of U.S. dollars, f.o.b. plant). If you are a union/worker group or trade/business association, provide the information, on an aggregate basis, for the firms in which your workers are employed/ which are members of your association.

(a) Production (quantity) and, if known, an estimate of the percentage of total U.S. production of each Domestic Like Product accounted for by your firm's(s') production; and

(b) the quantity and value of U.S. commercial shipments of each Domestic Like Product produced in your U.S. plant(s).

(8) If you are a U.S. importer or a trade/business association of U.S. importers of the Subject Merchandise from the Subject Countries, provide the following information on your firm's(s') operations on that product during calendar year 1998 (report quantity data in thousands of units and value data in thousands of U.S. dollars). If you are a trade/business association, provide the information, on an aggregate basis, for the firms which are members of your association.

(a) The quantity and value (landed, duty-paid but not including antidumping or countervailing duties) of U.S. imports and, if known, an estimate of the percentage of total U.S. imports of Subject Merchandise from the Subject Countries accounted for by your firm's(s') imports; and

(b) the quantity and value (f.o.b. U.S. port, including antidumping and/or countervailing duties) of U.S. commercial shipments of Subject Merchandise imported from the Subject Countries.

(9) If you are a producer, an exporter, or a trade/business association of producers or exporters of the Subject Merchandise in the Subject Countries, provide the following information on your firm's(s') operations on that product during calendar year 1998 (report quantity data in thousands of units and value data in thousands of U.S. dollars, landed and duty-paid at the U.S. port but not including antidumping or countervailing duties). If you are a trade/business association, provide the information, on an aggregate basis, for the firms which are members of your association.

(a) Production (quantity) and, if known, an estimate of the

percentage of total production of Subject Merchandise in the Subject Countries accounted for by your firm's(s') production; and

(b) the quantity and value of your firm's(s') exports to the United States of Subject Merchandise and, if known, an estimate of the percentage of total exports to the United States of Subject Merchandise from the Subject Countries accounted for by your firm's(s') exports.

(10) Identify significant changes, if any, in the supply and demand conditions or business cycle for each Domestic Like Product that have occurred in the United States or in the market for the Subject Merchandise in the Subject Countries since the Order Dates, and significant changes, if any, that are likely to occur within a reasonably foreseeable time. Supply conditions to consider include technology; production methods; development efforts; ability to increase production (including the shift of production facilities used for other products and the use, cost, or availability of major inputs into production); and factors related to the ability to shift supply among different national markets (including barriers to importation in foreign markets or changes in market demand abroad). Demand conditions to consider include end uses and applications; the existence and availability of substitute products; and the level of competition among the Domestic Like Product produced in the United States, Subject Merchandise produced in the Subject Countries, and such merchandise from other countries.

(11) A statement of whether you agree with the above definitions of the Domestic Like Product and Domestic Industry; if you disagree with either or both of these definitions, please explain why and provide alternative definitions.

Authority: These reviews are being conducted under authority of title VII of the Tariff Act of 1930; this notice is published pursuant to section 207.61 of the Commission's rules.

Issued: March 25, 1999.

By order of the Commission.

Donna R. Koehnke,

Secretary.

[FR Doc. 99–8071 Filed 3–31–99; 8:45 am]

BILLING CODE 7020–02–P

INTERNATIONAL TRADE COMMISSION

[Investigation No. 731–TA–377 (Review)]

Internal Combustion Industrial Forklift Trucks From Japan

AGENCY: United States International Trade Commission.

ACTION: Institution of a five-year review concerning the antidumping duty order on internal combustion industrial forklift trucks from Japan.

SUMMARY: The Commission hereby gives notice that it has instituted a review pursuant to section 751(c) of the Tariff Act of 1930 (19 U.S.C. 1675(c)) (the Act) to determine whether revocation of the antidumping duty order on internal combustion industrial forklift trucks from Japan would be likely to lead to continuation or recurrence of material injury. Pursuant to section 751(c)(2) of the Act, interested parties are requested to respond to this notice by submitting the information specified below to the Commission; [1] to be assured of consideration, the deadline for responses is May 21, 1999. Comments on the adequacy of responses may be filed with the Commission by June 14, 1999.

For further information concerning the conduct of this review and rules of general application, consult the Commission's Rules of Practice and Procedure, part 201, subparts A through E (19 CFR part 201), and part 207, subparts A, D, E, and F (19 CFR part 207). Recent amendments to the Rules of Practice and Procedure pertinent to five-year reviews, including the text of subpart F of part 207, are published at 63 F.R. 30599, June 5, 1998, and may be downloaded from the Commission's World Wide Web site at http://www.usitc.gov/rules.htm.

EFFECTIVE DATE: April 1, 1999.

FOR FURTHER INFORMATION CONTACT: Mary Messer (202–205–3193) or Vera Libeau (202–205–3176), Office of Investigations, U.S. International Trade Commission, 500 E Street SW, Washington, DC 20436. Hearing-impaired persons can obtain information on this matter by contacting the Commission's TDD terminal on 202–205–1810. Persons with mobility impairments who will need special assistance in gaining access to the Commission should contact the Office of the Secretary at 202–205–2000. General information concerning the Commission may also be obtained by accessing its internet server (http://www.usitc.gov).

SUPPLEMENTARY INFORMATION:

Background

On June 7, 1988, the Department of Commerce issued an antidumping duty order on imports of internal combustion industrial forklift trucks from Japan (53 F.R. 20882). The Commission is conducting a review to determine whether revocation of the order would be likely to lead to continuation or recurrence of material injury to the domestic industry within a reasonably foreseeable time. It will assess the adequacy of interested party responses to this notice of institution to determine whether to conduct a full review or an expedited review. The Commission's determination in any expedited review will be based on the facts available, which may include information provided in response to this notice.

Definitions

The following definitions apply to this review:

(1) Subject Merchandise is the class or kind of merchandise that is within the scope of the five-year review, as defined by the Department of Commerce.

(2) The Subject Country in this review is Japan.

(3) The Domestic Like Product is the domestically produced product or products which are like, or in the absence of like, most similar in characteristics and uses with, the Subject Merchandise. In its original determination, the Commission found a single Domestic Like Product: industrial, operator-riding internal combustion engine forklift trucks with a weight-lift capacity of between 2,000 and 15,000 pounds (inclusive), with a U.S.-produced frame.

(4) The Domestic Industry is the U.S. producers as a whole of the Domestic Like Product, or those producers whose collective output of the Domestic Like Product constitutes a major proportion of the total domestic production of the product. In its original determination, the Commission defined a single Domestic Industry as U.S. producers of industrial, operator-riding internal combustion engine forklift trucks with a weight-lift capacity of between 2,000 and 15,000 pounds (inclusive), with a U.S.-produced frame.

[1] No response to this request for information is required if a currently valid Office of Management and Budget (OMB) number is not displayed; the OMB number is 3117–0016/USITC No. 99–5–003, expiration date June 30, 1999. Public reporting burden for the request is estimated to average 7 hours per response. Please send comments regarding the accuracy of this burden estimate to the Office of Investigations, U.S. International Trade Commission, 500 E Street, SW, Washington, DC 20436.

(5) The Order Date is the date that the antidumping duty order under review became effective. In this review, the Order Date is June 7, 1988.

(6) An Importer is any person or firm engaged, either directly or through a parent company or subsidiary, in importing the Subject Merchandise into the United States from a foreign manufacturer or through its selling agent.

Participation in the Review and Public Service List

Persons, including industrial users of the Subject Merchandise and, if the merchandise is sold at the retail level, representative consumer organizations, wishing to participate in the review as parties must file an entry of appearance with the Secretary to the Commission, as provided in section 201.11(b)(4) of the Commission's rules, no later than 21 days after publication of this notice in the **Federal Register**. The Secretary will maintain a public service list containing the names and addresses of all persons, or their representatives, who are parties to the review.

Limited Disclosure of Business Proprietary Information (BPI) Under an Administrative Protective Order (APO) and APO Service List

Pursuant to section 207.7(a) of the Commission's rules, the Secretary will make BPI submitted in this review available to authorized applicants under the APO issued in the review, provided that the application is made no later than 21 days after publication of this notice in the **Federal Register**. Authorized applicants must represent interested parties, as defined in 19 U.S.C. § 1677(9), who are parties to the review. A separate service list will be maintained by the Secretary for those parties authorized to receive BPI under the APO.

Certification

Pursuant to section 207.3 of the Commission's rules, any person submitting information to the Commission in connection with this review must certify that the information is accurate and complete to the best of the submitter's knowledge. In making the certification, the submitter will be deemed to consent, unless otherwise specified, for the Commission, its employees, and contract personnel to use the information provided in any other reviews or investigations of the same or comparable products which the Commission conducts under Title VII of the Act, or in internal audits and investigations relating to the programs and operations of the Commission pursuant to 5 U.S.C. Appendix 3.

Written Submissions

Pursuant to section 207.61 of the Commission's rules, each interested party response to this notice must provide the information specified below. The deadline for filing such responses is May 21, 1999. Pursuant to section 207.62(b) of the Commission's rules, eligible parties (as specified in Commission rule 207.62(b)(1)) may also file comments concerning the adequacy of responses to the notice of institution and whether the Commission should conduct an expedited or full review. The deadline for filing such comments is June 14, 1999. All written submissions must conform with the provisions of sections 201.8 and 207.3 of the Commission's rules and any submissions that contain BPI must also conform with the requirements of sections 201.6 and 207.7 of the Commission's rules. The Commission's rules do not authorize filing of submissions with the Secretary by facsimile or electronic means. Also, in accordance with sections 201.16(c) and 207.3 of the Commission's rules, each document filed by a party to the review must be served on all other parties to the review (as identified by either the public or APO service list as appropriate), and a certificate of service must accompany the document (if you are not a party to the review you do not need to serve your response).

Inability to Provide Requested Information

Pursuant to section 207.61(c) of the Commission's rules, any interested party that cannot furnish the information requested by this notice in the requested form and manner shall notify the Commission at the earliest possible time, provide a full explanation of why it cannot provide the requested information, and indicate alternative forms in which it can provide equivalent information. If an interested party does not provide this notification (or the Commission finds the explanation provided in the notification inadequate) and fails to provide a complete response to this notice, the Commission may take an adverse inference against the party pursuant to section 776(b) of the Act in making its determination in the review.

Information To Be Provided in Response to This Notice of Institution

As used below, the term ''firm'' includes any related firms.

(1) The name and address of your firm or entity (including World Wide Web address if available) and name, telephone number, fax number, and E-mail address of the certifying official.

(2) A statement indicating whether your firm/entity is a U.S. producer of the Domestic Like Product to which your response pertains, a U.S. union or worker group, a U.S. importer of the Subject Merchandise, a foreign producer or exporter of the Subject Merchandise, a U.S. or foreign trade or business association, or another interested party (including an explanation). If you are a union/worker group or trade/business association, identify the firms in which your workers are employed or which are members of your association.

(3) A statement indicating whether your firm/entity is willing to participate in this review by providing information requested by the Commission.

(4) A statement of the likely effects of the revocation of the antidumping duty order on each Domestic Industry for which you are filing a response in general and/or your firm/entity specifically. In your response, please discuss the various factors specified in section 752(a) of the Act (19 U.S.C. 1675a(a)) including the likely volume of subject imports, likely price effects of subject imports, and likely impact of imports of Subject Merchandise on the Domestic Industry.

(5) A list of all known and currently operating U.S. producers of each Domestic Like Product for which you are filing a response. Identify any known related parties and the nature of the relationship as defined in section 771(4)(B) of the Act (19 U.S.C. 1677(4)(B)).

(6) A list of all known and currently operating U.S. importers of the Subject Merchandise and producers of the Subject Merchandise in the Subject Country that currently export or have exported Subject Merchandise to the United States or other countries since 1987.

(7) If you are a U.S. producer of a Domestic Like Product, provide the following information separately on your firm's operations on each product during calendar year 1998 (report quantity data in units and value data in thousands of U.S. dollars, f.o.b. plant). If you are a union/worker group or trade/business association, provide the information, on an aggregate basis, for the firms in which your workers are employed/which are members of your association.

(a) Production (quantity) and, if known, an estimate of the percentage of total U.S. production of the Domestic Like Product accounted for by your firm's(s') production; and

(b) the quantity and value of U.S. commercial shipments of the Domestic Like Product produced in your U.S. plant(s).

(8) If you are a U.S. importer or a trade/business association of U.S. importers of the Subject Merchandise from the Subject Country, provide the following information on your firm's(s') operations on that product during calendar year 1998 (report quantity data in units and value data in thousands of U.S. dollars). If you are a trade/business association, provide the information, on an aggregate basis, for the firms which are members of your association.

(a) The quantity and value (landed, duty-paid but not including antidumping or countervailing duties) of U.S. imports and, if known, an estimate of the percentage of total U.S. imports of Subject Merchandise from the Subject Country accounted for by your firm's(s') imports; and

(b) the quantity and value (f.o.b. U.S. port, including antidumping and/or countervailing duties) of U.S. commercial shipments of Subject Merchandise imported from the Subject Country.

(9) If you are a producer, an exporter, or a trade/business association of producers or exporters of the Subject Merchandise in the Subject Country, provide the following information on your firm's(s') operations on that product during calendar year 1998 (report quantity data in units and value data in thousands of U.S. dollars, landed and duty-paid at the U.S. port but not including antidumping or countervailing duties). If you are a trade/business association, provide the information, on an aggregate basis, for the firms which are members of your association.

(a) Production (quantity) and, if known, an estimate of the percentage of total production of Subject Merchandise in the Subject Country accounted for by your firm's(s') production; and

(b) the quantity and value of your firm's(s') exports to the United States of Subject Merchandise and, if known, an estimate of the percentage of total exports to the United States of Subject Merchandise from the Subject Country accounted for by your firm's(s') exports.

(10) Identify significant changes, if any, in the supply and demand conditions or business cycle for each Domestic Like Product that have occurred in the United States or in the market for the Subject Merchandise in the Subject Country since the Order Date, and significant changes, if any, that are likely to occur within a reasonably foreseeable time. Supply conditions to consider include technology; production methods; development efforts; ability to increase production (including the shift of production facilities used for other products and the use, cost, or availability of major inputs into production); and factors related to the ability to shift supply among different national markets (including barriers to importation in foreign markets or changes in market demand abroad). Demand conditions to consider include end uses and applications; the existence and availability of substitute products; and the level of competition among the Domestic Like Product produced in the United States, Subject Merchandise produced in the Subject Country, and such merchandise from other countries.

(11) (OPTIONAL) A statement of whether you agree with the above definitions of the Domestic Like Product and Domestic Industry; if you disagree with either or both of these definitions, please explain why and provide alternative definitions.

Authority: This review is being conducted under authority of title VII of the Tariff Act of 1930; this notice is published pursuant to section 207.61 of the Commission's rules.

Issued: March 25, 1999.

By order of the Commission.

Donna R. Koehnke,

Secretary.

[FR Doc. 99–8073 Filed 3–31–99; 8:45 am]

BILLING CODE 7020–02–P

INTERNATIONAL TRADE COMMISSION

[Investigation No. 731-TA–384 (Review)]

Nitrile Rubber From Japan

AGENCY: United States International Trade Commission.

ACTION: Institution of a five-year review concerning the antidumping duty order on nitrile rubber from Japan.

SUMMARY: The Commission hereby gives notice that it has instituted a review pursuant to section 751(c) of the Tariff Act of 1930 (19 U.S.C. 1675(c)) (the Act) to determine whether revocation of the antidumping duty order on nitrile rubber from Japan would be likely to lead to continuation or recurrence of material injury. Pursuant to section 751(c)(2) of the Act, interested parties are requested to respond to this notice by submitting the information specified below to the Commission [1] to be assured of consideration, the deadline for responses is May 21, 1999. Comments on the adequacy of responses may be filed with the Commission by June 14, 1999.

For further information concerning the conduct of this review and rules of general application, consult the Commission's Rules of Practice and Procedure, part 201, subparts A through E (19 CFR part 201), and part 207, subparts A, D, E, and F (19 CFR part 207). Recent amendments to the Rules of Practice and Procedure pertinent to five-year reviews, including the text of subpart F of part 207, are published at 63 FR 30599, June 5, 1998, and may be downloaded from the Commission's World Wide Web site at http://www.usitc.gov/rules.htm.

EFFECTIVE DATE: April 1, 1999.

FOR FURTHER INFORMATION CONTACT: Mary Messer (202–205–3193) or Vera Libeau (202–205–3176), Office of Investigations, U.S. International Trade Commission, 500 E Street SW, Washington, DC 20436. Hearing-impaired persons can obtain information on this matter by contacting the Commission's TDD terminal on 202–205–1810. Persons with mobility impairments who will need special assistance in gaining access to the Commission should contact the Office of the Secretary at 202–205–2000. General information concerning the Commission may also be obtained by accessing its internet server (http://www.usitc.gov).

SUPPLEMENTARY INFORMATION:

Background

On June 16, 1988, the Department of Commerce issued an antidumping duty order on imports of nitrile rubber from Japan (53 FR 22553). The Commission is conducting a review to determine whether revocation of the order would be likely to lead to continuation or recurrence of material injury to the domestic industry within a reasonably foreseeable time. It will assess the adequacy of interested party responses to this notice of institution to determine whether to conduct a full review or an expedited review. The Commission's determination in any expedited review will be based on the facts available, which may include information provided in response to this notice.

---

[1] No response to this request for information is required if a currently valid Office of Management and Budget (OMB) number is not displayed; the OMB number is 3117–0016/USITC No. 99–5–004, expiration date June 30, 1999. Public reporting burden for the request is estimated to average 7 hours per response. Please send comments regarding the accuracy of this burden estimate to the Office of Investigations, U.S. International Trade Commission, 500 E Street, SW, Washington, DC 20436.

Definitions

The following definitions apply to this review:

(1) Subject Merchandise is the class or kind of merchandise that is within the scope of the five-year review, as defined by the Department of Commerce.

(2) The Subject Country in this review is Japan.

(3) The Domestic Like Product is the domestically produced product or products which are like, or in the absence of like, most similar in characteristics and uses with, the Subject Merchandise. In its original determination, the Commission found a single Domestic Like Product: nitrile rubber, regardless of acrylonitrile content, excluding nitrile rubber products that contain additives, rubber processing chemicals, or other material that is used for functions beyond the copolymerization of acrylonitrile and butadiene.

(4) The Domestic Industry is the U.S. producers as a whole of the Domestic Like Product, or those producers whose collective output of the Domestic Like Product constitutes a major proportion of the total domestic production of the product. In its original determination, the Commission defined a single Domestic Industry as producers of nitrile rubber, regardless of acrylonitrile content, excluding nitrile rubber products that contain additives, rubber processing chemicals, or other material that is used for functions beyond the copolymerization of acrylonitrile and butadiene.

(5) The Order Date is the date that the antidumping duty order under review became effective. In this review, the Order Date is June 16, 1988.

(6) An Importer is any person or firm engaged, either directly or through a parent company or subsidiary, in importing the Subject Merchandise into the United States from a foreign manufacturer or through its selling agent.

Participation in the Review and Public Service List

Persons, including industrial users of the Subject Merchandise and, if the merchandise is sold at the retail level, representative consumer organizations, wishing to participate in the review as parties must file an entry of appearance with the Secretary to the Commission, as provided in section 201.11(b)(4) of the Commission's rules, no later than 21 days after publication of this notice in the **Federal Register**. The Secretary will maintain a public service list containing the names and addresses of all persons, or their representatives, who are parties to the review.

Limited Disclosure of Business Proprietary Information (BPI) Under an Administrative Protective Order (APO) and APO Service List

Pursuant to section 207.7(a) of the Commission's rules, the Secretary will make BPI submitted in this review available to authorized applicants under the APO issued in the review, provided that the application is made no later than 21 days after publication of this notice in the **Federal Register**. Authorized applicants must represent interested parties, as defined in 19 U.S.C. 1677(9), who are parties to the review. A separate service list will be maintained by the Secretary for those parties authorized to receive BPI under the APO.

Certification

Pursuant to section 207.3 of the Commission's rules, any person submitting information to the Commission in connection with this review must certify that the information is accurate and complete to the best of the submitter's knowledge. In making the certification, the submitter will be deemed to consent, unless otherwise specified, for the Commission, its employees, and contract personnel to use the information provided in any other reviews or investigations of the same or comparable products which the Commission conducts under Title VII of the Act, or in internal audits and investigations relating to the programs and operations of the Commission pursuant to 5 U.S.C. Appendix 3.

Written Submissions

Pursuant to section 207.61 of the Commission's rules, each interested party response to this notice must provide the information specified below. The deadline for filing such responses is May 21, 1999. Pursuant to section 207.62(b) of the Commission's rules, eligible parties (as specified in Commission rule 207.62(b)(1)) may also file comments concerning the adequacy of responses to the notice of institution and whether the Commission should conduct an expedited or full review. The deadline for filing such comments is June 14, 1999. All written submissions must conform with the provisions of sections 201.8 and 207.3 of the Commission's rules and any submissions that contain BPI must also conform with the requirements of sections 201.6 and 207.7 of the Commission's rules. The Commission's rules do not authorize filing of submissions with the Secretary by facsimile or electronic means. Also, in accordance with sections 201.16(c) and 207.3 of the Commission's rules, each document filed by a party to the review must be served on all other parties to the review (as identified by either the public or APO service list as appropriate), and a certificate of service must accompany the document (if you are not a party to the review you do not need to serve your response).

Inability To Provide Requested Information

Pursuant to section 207.61(c) of the Commission's rules, any interested party that cannot furnish the information requested by this notice in the requested form and manner shall notify the Commission at the earliest possible time, provide a full explanation of why it cannot provide the requested information, and indicate alternative forms in which it can provide equivalent information. If an interested party does not provide this notification (or the Commission finds the explanation provided in the notification inadequate) and fails to provide a complete response to this notice, the Commission may take an adverse inference against the party pursuant to section 776(b) of the Act in making its determination in the review.

Information To Be Provided In Response To This Notice of Institution

As used below, the term ''firm'' includes any related firms.

(1) The name and address of your firm or entity (including World Wide Web address if available) and name, telephone number, fax number, and E-mail address of the certifying official.

(2) A statement indicating whether your firm/entity is a U.S. producer of the Domestic Like Product to which your response pertains, a U.S. union or worker group, a U.S. importer of the Subject Merchandise, a foreign producer or exporter of the Subject Merchandise, a U.S. or foreign trade or business association, or another interested party (including an explanation). If you are a union/worker group or trade/business association, identify the firms in which your workers are employed or which are members of your association.

(3) A statement indicating whether your firm/entity is willing to participate in this review by providing information requested by the Commission.

(4) A statement of the likely effects of the revocation of the antidumping duty order on each Domestic Industry for which you are filing a response in general and/or your firm/entity specifically. In your response, please discuss the various factors specified in section 752(a) of the Act (19 U.S.C. 1675a(a)) including the likely volume of

subject imports, likely price effects of subject imports, and likely impact of imports of Subject Merchandise on the Domestic Industry.

(5) A list of all known and currently operating U.S. producers of each Domestic Like Product for which you are filing a response. Identify any known related parties and the nature of the relationship as defined in section 771(4)(B) of the Act (19 U.S.C. 1677(4)(B)).

(6) A list of all known and currently operating U.S. importers of the Subject Merchandise and producers of the Subject Merchandise in the Subject Country that currently export or have exported Subject Merchandise to the United States or other countries since 1987.

(7) If you are a U.S. producer of a Domestic Like Product, provide the following information separately on your firm's operations on each product during calendar year 1998 (report quantity data in thousands of pounds and value data in thousands of U.S. dollars, f.o.b. plant). If you are a union/worker group or trade/business association, provide the information, on an aggregate basis, for the firms in which your workers are employed/which are members of your association.

(a) Production (quantity) and, if known, an estimate of the percentage of total U.S. production of the Domestic Like Product accounted for by your firm's(s') production; and

(b) the quantity and value of U.S. commercial shipments of the Domestic Like Product produced in your U.S. plant(s).

(8) If you are a U.S. importer or a trade/business association of U.S. importers of the Subject Merchandise from the Subject Country, provide the following information on your firm's(s') operations on that product during calendar year 1998 (report quantity data in thousands of pounds and value data in thousands of U.S. dollars). If you are a trade/business association, provide the information, on an aggregate basis, for the firms which are members of your association.

(a) The quantity and value (landed, duty-paid but not including antidumping or countervailing duties) of U.S. imports and, if known, an estimate of the percentage of total U.S. imports of Subject Merchandise from the Subject Country accounted for by your firm's(s') imports; and

(b) the quantity and value (f.o.b. U.S. port, including antidumping and/or countervailing duties) of U.S. commercial shipments of Subject Merchandise imported from the Subject Country.

(9) If you are a producer, an exporter, or a trade/business association of producers or exporters of the Subject Merchandise in the Subject Country, provide the following information on your firm's(s') operations on that product during calendar year 1998 (report quantity data in thousands of pounds and value data in thousands of U.S. dollars, landed and duty-paid at the U.S. port but not including antidumping or countervailing duties). If you are a trade/business association, provide the information, on an aggregate basis, for the firms which are members of your association.

(a) Production (quantity) and, if known, an estimate of the percentage of total production of Subject Merchandise in the Subject Country accounted for by your firm's(s') production; and

(b) the quantity and value of your firm's(s') exports to the United States of Subject Merchandise and, if known, an estimate of the percentage of total exports to the United States of Subject Merchandise from the Subject Country accounted for by your firm's(s') exports.

(10) Identify significant changes, if any, in the supply and demand conditions or business cycle for each Domestic Like Product that have occurred in the United States or in the market for the Subject Merchandise in the Subject Country since the Order Date, and significant changes, if any, that are likely to occur within a reasonably foreseeable time. Supply conditions to consider include technology; production methods; development efforts; ability to increase production (including the shift of production facilities used for other products and the use, cost, or availability of major inputs into production); and factors related to the ability to shift supply among different national markets (including barriers to importation in foreign markets or changes in market demand abroad). Demand conditions to consider include end uses and applications; the existence and availability of substitute products; and the level of competition among the Domestic Like Product produced in the United States, Subject Merchandise produced in the Subject Country, and such merchandise from other countries.

(11) (OPTIONAL) A statement of whether you agree with the above definitions of the Domestic Like Product and Domestic Industry; if you disagree with either or both of these definitions, please explain why and provide alternative definitions.

Authority: This review is being conducted under authority of title VII of the Tariff Act of 1930; this notice is published pursuant to section 207.61 of the Commission's rules.

Issued: March 25, 1999.

By order of the Commission.

Donna R. Koehnke,

Secretary.

[FR Doc. 99–8074 Filed 3–31–99; 8:45 am]

BILLING CODE 7020–02–P

INTERNATIONAL TRADE COMMISSION

[Investigation No. 731–TA–374 (Review)]

Potassium Chloride (Potash) From Canada

AGENCY: United States International Trade Commission.

ACTION: Institution of a five-year review concerning the suspended investigation on potassium chloride (potash) from Canada.

SUMMARY: The Commission hereby gives notice that it has instituted a review pursuant to section 751(c) of the Tariff Act of 1930 (19 U.S.C. 1675(c)) (the Act) to determine whether termination of the suspended investigation on potassium chloride (potash) from Canada would be likely to lead to continuation or recurrence of material injury. Pursuant to section 751(c)(2) of the Act, interested parties are requested to respond to this notice by submitting the information specified below to the Commission;[1] to be assured of consideration, the deadline for responses is May 21, 1999. Comments on the adequacy of responses may be filed with the Commission by June 14, 1999.

For further information concerning the conduct of this review and rules of general application, consult the Commission's Rules of Practice and Procedure, part 201, subparts A through E (19 CFR part 201), and part 207, subparts A, D, E, and F (19 CFR part 207). Recent amendments to the Rules of Practice and Procedure pertinent to five-year reviews, including the text of subpart F of part 207, are published at 63 FR 30599, June 5, 1998, and may be downloaded from the Commission's World Wide Web site at http://www.usitc.gov/rules.htm.

EFFECTIVE DATE: April 1, 1999.

FOR FURTHER INFORMATION CONTACT: Mary Messer (202–205–3193) or Vera

[1] No response to this request for information is required if a currently valid Office of Management and Budget (OMB) number is not displayed; the OMB number is 3117–0016/USITC No. 99–5–001, expiration date June 30, 1999. Public reporting burden for the request is estimated to average 7 hours per response. Please send comments regarding the accuracy of this burden estimate to the Office of Investigations, U.S. International Trade Commission, 500 E Street, SW, Washington, DC 20436.

Libeau (202–205-3176), Office of Investigations, U.S. International Trade Commission, 500 E Street SW, Washington, DC 20436. Hearing-impaired persons can obtain information on this matter by contacting the Commission's TDD terminal on 202–205–1810. Persons with mobility impairments who will need special assistance in gaining access to the Commission should contact the Office of the Secretary at 202–205–2000. General information concerning the Commission may also be obtained by accessing its internet server (http://www.usitc.gov).

SUPPLEMENTARY INFORMATION:

Background

On January 19, 1988, the Department of Commerce suspended an antidumping duty investigation on imports of potassium chloride (potash) from Canada (53 FR 1393). The Commission is conducting a review to determine whether termination of the suspended investigation would be likely to lead to continuation or recurrence of material injury to the domestic industry within a reasonably foreseeable time. It will assess the adequacy of interested party responses to this notice of institution to determine whether to conduct a full review or an expedited review. The Commission's determination in any expedited review will be based on the facts available, which may include information provided in response to this notice.

Definitions

The following definitions apply to this review:

(1) Subject Merchandise is the class or kind of merchandise that is within the scope of the five-year review, as defined by the Department of Commerce.

(2) The Subject Country in this review is Canada.

(3) The Domestic Like Product is the domestically produced product or products which are like, or in the absence of like, most similar in characteristics and uses with, the Subject Merchandise. In its original determination, the Commission defined the Domestic Like Product as potassium chloride.

(4) The Domestic Industry is the U.S. producers as a whole of the Domestic Like Product, or those producers whose collective output of the Domestic Like Product constitutes a major proportion of the total domestic production of the product. In its original determination, the Commission defined the Domestic Industry as producers of potassium chloride.

(5) The Order Date is the date that the investigation was suspended. In this review, the Order Date is January 19, 1988.

(6) An Importer is any person or firm engaged, either directly or through a parent company or subsidiary, in importing the Subject Merchandise into the United States from a foreign manufacturer or through its selling agent.

Participation in the Review and Public Service List

Persons, including industrial users of the Subject Merchandise and, if the merchandise is sold at the retail level, representative consumer organizations, wishing to participate in the review as parties must file an entry of appearance with the Secretary to the Commission, as provided in section 201.11(b)(4) of the Commission's rules, no later than 21 days after publication of this notice in the **Federal Register**. The Secretary will maintain a public service list containing the names and addresses of all persons, or their representatives, who are parties to the review.

Limited Disclosure of Business Proprietary Information (BPI) Under an Administrative Protective Order (APO) and APO Service List

Pursuant to section 207.7(a) of the Commission's rules, the Secretary will make BPI submitted in this review available to authorized applicants under the APO issued in the review, provided that the application is made no later than 21 days after publication of this notice in the **Federal Register**. Authorized applicants must represent interested parties, as defined in 19 U.S.C. 1677(9), who are parties to the review. A separate service list will be maintained by the Secretary for those parties authorized to receive BPI under the APO.

Certification

Pursuant to section 207.3 of the Commission's rules, any person submitting information to the Commission in connection with this review must certify that the information is accurate and complete to the best of the submitter's knowledge. In making the certification, the submitter will be deemed to consent, unless otherwise specified, for the Commission, its employees, and contract personnel to use the information provided in any other reviews or investigations of the same or comparable products which the Commission conducts under Title VII of the Act, or in internal audits and investigations relating to the programs and operations of the Commission pursuant to 5 U.S.C. Appendix 3.

Written Submissions

Pursuant to section 207.61 of the Commission's rules, each interested party response to this notice must provide the information specified below. The deadline for filing such responses is May 21, 1999. Pursuant to section 207.62(b) of the Commission's rules, eligible parties (as specified in Commission rule 207.62(b)(1)) may also file comments concerning the adequacy of responses to the notice of institution and whether the Commission should conduct an expedited or full review. The deadline for filing such comments is June 14, 1999. All written submissions must conform with the provisions of sections 201.8 and 207.3 of the Commission's rules and any submissions that contain BPI must also conform with the requirements of sections 201.6 and 207.7 of the Commission's rules. The Commission's rules do not authorize filing of submissions with the Secretary by facsimile or electronic means. Also, in accordance with sections 201.16(c) and 207.3 of the Commission's rules, each document filed by a party to the review must be served on all other parties to the review (as identified by either the public or APO service list as appropriate), and a certificate of service must accompany the document (if you are not a party to the review you do not need to serve your response).

Inability To Provide Requested Information

Pursuant to section 207.61(c) of the Commission's rules, any interested party that cannot furnish the information requested by this notice in the requested form and manner shall notify the Commission at the earliest possible time, provide a full explanation of why it cannot provide the requested information, and indicate alternative forms in which it can provide equivalent information. If an interested party does not provide this notification (or the Commission finds the explanation provided in the notification inadequate) and fails to provide a complete response to this notice, the Commission may take an adverse inference against the party pursuant to section 776(b) of the Act in making its determination in the review.

Information To Be Provided in Response to This Notice of Institution

As used below, the term ''firm'' includes any related firms.

(1) The name and address of your firm or entity (including World Wide

Web address if available) and name, telephone number, fax number, and E-mail address of the certifying official.

(2) A statement indicating whether your firm/entity is a U.S. producer of the Domestic Like Product to which your response pertains, a U.S. union or worker group, a U.S. importer of the Subject Merchandise, a foreign producer or exporter of the Subject Merchandise, a U.S. or foreign trade or business association, or another interested party (including an explanation). If you are a union/worker group or trade/business association, identify the firms in which your workers are employed or which are members of your association.

(3) A statement indicating whether your firm/entity is willing to participate in this review by providing information requested by the Commission.

(4) A statement of the likely effects of the termination of the suspended investigation on each Domestic Industry for which you are filing a response in general and/or your firm/entity specifically. In your response, please discuss the various factors specified in section 752(a) of the Act (19 U.S.C. 1675a(a)) including the likely volume of subject imports, likely price effects of subject imports, and likely impact of imports of *Subject Merchandise* on the *Domestic Industry*.

(5) A list of all known and currently operating U.S. producers of each Domestic Like Product for which you are filing a response. Identify any known related parties and the nature of the relationship as defined in section 771(4)(B) of the Act (19 U.S.C. 1677(4)(B)).

(6) A list of all known and currently operating U.S. importers of the Subject Merchandise and producers of the Subject Merchandise in the Subject Country that currently export or have exported Subject Merchandise to the United States or other countries since 1987.

(7) If you are a U.S. producer of a Domestic Like Product, provide the following information separately on your firm's operations on each product during calendar year 1998 (report quantity data in short tons and value data in thousands of U.S. dollars, f.o.b. plant). If you are a union/worker group or trade/business association, provide the information, on an aggregate basis, for the firms in which your workers are employed/which are members of your association.

(a) Production (quantity) and, if known, an estimate of the percentage of total U.S. production of the Domestic Like Product accounted for by your firm's(s') production; and (b) the quantity and value of U.S. commercial shipments of the Domestic Like Product produced in your U.S. plant(s).

(8) If you are a U.S. importer or a trade/business association of U.S. importers of the Subject Merchandise from the Subject Country, provide the following information on your firm's(s') operations on that product during calendar year 1998 (report quantity data in short tons and value data in thousands of U.S. dollars). If you are a trade/business association, provide the information, on an aggregate basis, for the firms which are members of your association.

(a) The quantity and value (landed, duty-paid but not including antidumping or countervailing duties) of U.S. imports and, if known, an estimate of the percentage of total U.S. imports of Subject Merchandise from the Subject Country accounted for by your firm's(s') imports; and

(b) the quantity and value (f.o.b. U.S. port, including antidumping and/or countervailing duties) of U.S. commercial shipments of Subject Merchandise imported from the Subject Country.

(9) If you are a producer, an exporter, or a trade/business association of producers or exporters of the Subject Merchandise in the Subject Country, provide the following information on your firm's(s') operations on that product during calendar year 1998 (report quantity data in short tons and value data in thousands of U.S. dollars, landed and duty-paid at the U.S. port but not including antidumping or countervailing duties). If you are a trade/business association, provide the information, on an aggregate basis, for the firms which are members of your association.

(a) Production (quantity) and, if known, an estimate of the percentage of total production of Subject Merchandise in the Subject Country accounted for by your firm's(s') production; and

(b) the quantity and value of your firm's(s') exports to the United States of Subject Merchandise and, if known, an estimate of the percentage of total exports to the United States of Subject Merchandise from the Subject Country accounted for by your firm's(s') exports.

(10) Identify significant changes, if any, in the supply and demand conditions or business cycle for each Domestic Like Product that have occurred in the United States or in the market for the Subject Merchandise in the Subject Country since the Order Date, and significant changes, if any, that are likely to occur within a reasonably foreseeable time. Supply conditions to consider include technology; production methods; development efforts; ability to increase production (including the shift of production facilities used for other products and the use, cost, or availability of major inputs into production); and factors related to the ability to shift supply among different national markets (including barriers to importation in foreign markets or changes in market demand abroad). Demand conditions to consider include end uses and applications; the existence and availability of substitute products; and the level of competition among the Domestic Like Product produced in the United States, Subject Merchandise produced in the Subject Country, and such merchandise from other countries.

(11) (OPTIONAL) A statement of whether you agree with the above definitions of the Domestic Like Product and Domestic Industry; if you disagree with either or both of these definitions, please explain why and provide alternative definitions.

Authority: This review is being conducted under authority of title VII of the Tariff Act of 1930; this notice is published pursuant to section 207.61 of the Commission's rules.

Issued: March 25, 1999.

By order of the Commission.

Donna R. Koehnke,

Secretary.

[FR Doc. 99–8072 Filed 3–31–99; 8:45 am]

BILLING CODE 7020–02–U

JUDICIAL CONFERENCE OF THE UNITED STATES

Proposed Amended Rules for the Processing of Petitions for Review of Circuit Council Orders Under the Judicial Conduct and Disability Act

AGENCY: Judicial Conference of the United States.

ACTION: Request for comments.

SUMMARY: The Judicial Conference Committee to Review Circuit Council Conduct and Disability Orders proposes an amendment to its Rules for the Processing of Petitions for Review of Circuit Council Orders under the Judicial Conduct and Disability Act, adopted in September 1989. The recommended change would amend Rule 6 to establish a 60-day time limit for filing a petition for review, with an additional 30 days for the filings of cross-petitions for review, by the Judicial Conference of action taken by the judicial council of a circuit in complaint proceedings under the Judicial Conduct and Disability Act, 28 U.S.C. 372(c). The existing rules do not impose any time limit upon the filing of a petition for review with the Judicial Conference.

DATES: Written comments on these rules should be received on or before April 30, 1999.

ADDRESSES: Comments should be mailed to the Office of the General Counsel, Suite 7–290, Administrative Office of the United States Courts, One Columbus Circle, NE., Washington, DC. 20544.

FOR FURTHER INFORMATION CONTACT: Jeffrey N. Barr, Assistant General Counsel, Suite 7–290, Administrative Office of the United States Courts, One Columbus Circle, NE., Washington, DC 20544, telephone: (202) 502–1100.

Rules of the Judicial Conference of the United States for the Processing of Petitions for Review of Circuit Council Orders Under the Judicial Conduct and Disability Act

The Judicial Conference of the United States prescribes these rules under the authority of section 372(c)(11) of title 28, United States Code, with respect to the processing of petitions for review submitted to the Conference under 28 U.S.C. 372(c)(10), seeking review of circuit council actions taken under 28 U.S.C. 372(c)(6) upon complaints of judicial conduct or disability:

1. Petition for review may be made by the filing of a written submission to the Judicial Conference addressed as follows: Loenidas Ralph Mecham, Secretary, Judicial Conference of the United States Administrative Office of the United States Courts, Washington, DC 20544, Attention: Office of the General Counsel.

2. No form is prescribed for the filing of a petition for review.

3. Such petition shall consist of a written submission in typewriting on plain paper of 8½ by 11 inch dimensions.

4. No formal limitation is imposed upon the length of the petition, but it is suggested that such petition should not normally exceed 20 pages in addition to the attachments required by Rule 8.

5. The petition shall contain a short and plain statement of the basic facts underlying the complaint, the history of its consideration before the appropriate circuit judicial council, and the premises upon which the petitioner asserts entitlement to relief from the action taken by the council.

6. A petition for review under these rules must be submitted within sixty (60) days following final action by the circuit judicial council under 28 U.S.C. 372(c)(6) and issuance of its implementing order under 28 U.S.C. 372(c)(15). Once a petition for review has been submitted, a cross-petition for review must be submitted with thirty (30) days following submission of the petition for review, or within sixty (60) days following final action by the circuit judicial council under 28 U.S.C. 372(c)(6) and issuance of its implementing order under 28 U.S.C. 372(c)(15), whichever is later.

7. Five copies of the petition for review shall be submitted, at least one of which shall bear the original ink signature of the petitioner or his or her attorney. If the petitioner submits a signed declaration of inability to pay the expense of duplicating the petition, the Administrative Office shall then accept the original petition alone and shall undertake necessary reproduction of copies at its expense.

8. The petition for review shall have attached thereto a copy of each of the following documents:

—The order of the circuit judicial council issued under 28 U.S.C. 372(c)(15), of which review is sought;
—The original complaint of judicial misconduct or disability that commenced the proceeding;
—Any other documents or correspondence arising in the course of the proceeding before the judicial council or its special committee which the petitioner deems essential or useful to the prompt disposition of the review petition.

9. Upon receipt of a petition for review that appears on its face to be coherent, in compliance with these rules, and appropriate for present disposition, the Administrative Office shall promptly acknowledge receipt of the petition and advise the chairman of the Judicial Conference Committee to Review Circuit Council Conduct and Disability Orders, a committee appointed by the Chief Justice of the United States as authorized by 28 U.S.C. 331.

10. Unless otherwise directed by the Executive Committee of the Judicial Conference, the Committee to Review Circuit Council Conduct and Disability Orders shall assume the consideration and disposition of all petitions for review, in conformity with the Judicial Conference statement of the Committee's jurisdiction.

11. The Administrative Office shall then distribute the petition and its attachment to the members of the Committee to Review Circuit Council Conduct and Disability Orders for their deliberation. The petition shall receive an eight-digit identifying number of which the initial two digits shall refer to the year of filing, the next three digits shall be ''372,'' and the final three shall identify each individual petition. Unless otherwise directed by the chairman, the Administrative Office shall contact the circuit executive or clerk of the U.S. court of appeals for the appropriate circuit to obtain the record of circuit council consideration of the complaint for distribution to the Committee.

12. In recognition of the review nature of petition proceedings under 28 U.S.C. 372(c)(10), no additional investigation shall ordinarily be undertaken by the Judicial Conference or the Committee. If such investigation is deemed necessary, the Conference or Committee may remand the matter to the circuit judicial council that considered the complaint, or may undertake any investigation found to be required. If such investigation is undertaken by the Conference or Committee, (a) adequate prior notice shall be given in writing to the judge or magistrate whose conduct is the subject of the complaint, (b) such judge or magistrate shall be afforded an opportunity to appear at any investigative proceedings which might be conducted and to present argument orally or in writing, and (c) the complainant shall be afforded an opportunity to appear at any proceedings conducted if it is considered that the complainant could offer substantial new and relevant information.

13. Except where additional investigation is undertaken as provided in Rule 12, there shall be no arguments or personal appearances before the Committee. Unless the petition for review is amenable to disposition on the face thereof, the Committee may determine to receive written argument from the petitioner and from the other party to the complaint proceeding (the complainant or judge/magistrate complained against).

14. The decision on the petition shall be made by written order as provided by 28 U.S.C. 372(c)(15). Such order shall be

forwarded by the committee chairman to the Administrative Office, which shall distribute it as directed by the chairman. In accordance with section 372(c)(15), orders of the Committee shall be maintained as public documents by the Administrative Office and by the clerk of the United States court of appeals for the circuit in which the complaint arose.

15. In conformity with 28 U.S.C. 372(c)(10), all orders and determinations of the Judicial Conference or of the Committee on its behalf, including denials of petitions for review, shall be final and conclusive and shall not be judicially reviewable on appeal or otherwise.

Leonidas Ralph Mecham,

Secretary.

[FR Doc. 99–8025 Filed 3–31–99; 8:45 am]

BILLING CODE 2210–55–M

DEPARTMENT OF JUSTICE

Notice of Lodging of Consent Decree Pursuant to the Comprehensive Environmental Response, Compensation and Liability Act of 1980

In accordance with Departmental policy, 28 CFR 50.7, and 42 U.S.C. 9622(d)(2), notice is hereby given that on March 22, 1999, a Consent Decree was lodged in *United States* v. *Butterfield Joint Venture, Ltd.*, Civil Action No. 2:99CV–0182J with the United States District Court for the District of Utah.

The Complaint in this case was filed under Section 107 of the Comprehensive Environmental Response, Compensation and Liability Act of 1980, as amended (''CERCLA''), 42 U.S.C. 9607, with respect to the Midvale Slag Superfund Site located in Midvale, Utah against Butterfield Joint Venture, Ltd. Pursuant to the terms of the Consent Decree, which resolves claims under the above-mentioned statute the settling defendant agrees to pay $125,000 to the United States to reimburse response costs incurred at the Site and the United States convenants not to sue the settling defendant for further response costs incurred by the United States at the Site.

The Department of Justice will receive comments relating to the proposed Consent Decree for a period of thirty days from the date of publication of this notice. Comments should be addressed to the Assistant Attorney General, Environment and Natural Resources Division, Department of Justice, Washington, DC 20530, and should refer to *United* days from the date of publication of this notice. Comments should be addressed to the Assistant Attorney General, Environment and Natural Resources Division, Department of Justice, Washington, DC 20530, and should refer to *United States* v. *Buttefield Joint Venture, Ltd.*, DOJ Ref. No. 90–11–3–1194.

The proposed Consent Decree may be examined at the office of the United States Attorney, District of Utah, 185 South Street, Suite 400, Salt Lake City 84111, or at the offices of the Environmental Protection Agency, Region VIII, 999 18th Street, Suite 500, Denver, Colorado, 80202. Copies of the proposed consent decree may be examined at the Consent Decree Library, 1120 G Street, NW, 3rd Floor, Washington, DC 20005, (202) 624–0892. A copy of the consent decree may also be obtained in person or by mail at the Consent Decree Library, 1120 G Street, NW, 3rd Floor, Washington, DC 20005. When requesting a copy of the decree by mail, please enclose a check in the amount of $6.16 for a copy (twenty-five cents per page reproduction costs) payable to the ''Consent Decree Library.''

Joel M. Gross,

Chief, Environmental Enforcement Section, Environment and Natural Resources Division.

[FR Doc. 99–7971 Filed 3–31–99; 8:45 am]

BILLING CODE 4410–15–M

DEPARTMENT OF JUSTICE

Notice of Lodging of Consent Decrees Pursuant to the Comprehensive Environmental Response, Compensation and Liability Act

In accordance with Departmental policy, the Department of Justice gives notice that two proposed consent decrees in the consolidated cases captioned *United States* v. *Cantrell, et al.*, Civil Action No. C–1–97–981 (S.D. Ohio) and *United States* v. *Ohio Power Co., et al.*, Civil Action No. C–1–98–247 (S.D. Ohio), were lodged with the United States District Court for the Southern District of Ohio, Western Division, on March 18, 1999, pertaining to the Automatic Containers Superfund Site (the ''Site''), located near Ironton, in Lawrence County, Ohio. The proposed consent decrees would resolve certain civil claims of the United States for recovery of more than $1.2 million in past response costs under Section 107 of the Comprehensive Environmental Response, Compensation, and Liability Act, as amended (''CERCLA''), 42 U.S.C. 9607, against two defendants in the consolidated cases.

The first proposed consent decree, captioned ''Partial Consent Decree with Settling Defendant Ohio Power Company'' would provide for Ohio Power Company's payment of $210,000 in reimbursement of past CERCLA response costs the United States incurred in connection with the Site. The second proposed consent decree, captioned ''Partial Consent Decree with Settling Defendant AK Steel Corporation'' would provide for AK Steel Corporation's payment of $15,000 in reimbursement of past CERCLA response costs the United States incurred in connection with the Site.

The Department of Justice will receive, for a period of thirty (30) days from the date of this publication, comments relating to the proposed consent decrees. Comments should be addressed to the Assistant Attorney General, Environment and Natural Resources Division, United States Department of Justice, Washington, DC 20530, and should refer to *United States* v. *Cantrell, et al.*, Civil Action No. C–1–97–981 (S.D. Ohio) and *United States* v. *Ohio Power Co., et al.*, Civil Action No. C–1–98–247 (S.D. Ohio), and DOJ References No. 90–11–3–1756, and the proposed consent decree(s) which the comments address.

The proposed consent decrees may be examined at: (1) Office of the United States Attorney for the Southern District of Ohio, 220 U.S. Courthouse, 100 East Fifth Street, Cincinnati, Ohio 45202 (contact Gerald Kaminski (513–684–3711)); (2) the United States Environmental Protection Agency (Region 5), 77 West Jackson Boulevard, Chicago, Illinois 60604–3590 (contact Mony Chabria (312–886–6842)); and (3) the U.S. Department of Justice, Environment and Natural Resources Division Consent Decree Library, 1120 G Street, NW, 3rd Floor, Washington, DC 20005 (202–624–0892). Copies of the proposed consent decrees may be obtained in person or by mail from the Consent Decree Library, 1120 G Street, NW, 3rd Floor, Washington, DC 20005. In requesting copies, please refer to the referenced case and DOJ Reference Number, the proposed consent decree(s), requested, and enclose a check for the amount(s) described below, made payable to the Consent Decree Library. The cost for a copy of the ''Partial Consent Decree with Settling Defendant Ohio Power Company'' only is $5.75 (23 pages at 25 cents per page reproduction costs), or $6.50 for that consent decree and all appendices (26 pages). The cost for a copy of the ''Partial Consent Decree with Settling Defendant AK Steel Corporation'' only is $6.00 (24 pages at 25 cents per page reproduction costs), or

$6.75 for that consent decree and all appendices (27 pages).

Joel M. Gross,

Chief, Environmental Enforcement Section, Environment and Natural Resources Division.

[FR Doc. 99–7972 Filed 3–31–99; 8:45 am]

BILLING CODE 4410–15–M

DEPARTMENT OF JUSTICE

Notice of Lodging of Consent Decree Pursuant to the Comprehensive Environmental Response, Compensation, and Liability Act of 1980, as Amended

Consistent with Departmental policy, 28 CFR 507.7, 38 FR 19029, and 42 U.S.C. 9622(d), notice is hereby given that on March 12, 1999, a proposed Consent Decree in *United States* v. *Janssen Ortho LLC*, Civil Action No. 99–1261 SEC, was lodged with the United States District Court for the District of Puerto Rico. The proposed Consent Decree will resolved the United States' claims under the Comprehensive Environmental Response, Compensation, and Liability Act (''CERCLA''), 42 U.S.C. 9601 *et seq.*, on behalf of the U.S. Environmental Protection Agency (''EPA'') against defendant relating to the Janssen, Inc. Superfund Site (''Site'') located in Gurabo, Puerto Rico. The Complaint alleges that the defendant is liable under section 107(a) of CERCLA, 42 U.S.C. 9607(a).

Pursuant to the Consent Decree, the settling defendant will implement the remedy selected in the September 30, 1997 Record of Decision (''ROD'') for the Site, estimated to cost approximately $15 million, reimburse the United States for 100% of its past costs ($865,972.33) and pay all EPA future response costs, as defined in the Consent Decree.

The Department of Justice will receive for a period of thirty (30) days from the date of this publication comments relating to the proposed consent decree. Any comments should be addressed to the Assistant Attorney General of the Environment and Natural Resources Division, Department of Justice, Washington, DC 20530, and should refer to *United States* v. *Janssen Ortho LLC*, Civil Action No. 99–1261 SEC, D.J. Ref. 90–11–3–1768.

The proposed consent decree may be examined at the Office of the United States Attorney, District of Puerto Rico, Federal Building, Chardon Avenue, Hato Rey, Puerto Rico 00918 and at Region II, Office of the Environmental Protection Agency, 290 Broadway, New York, NY 10007–1866 and at the Consent Decree Library, 1120 G Street, NW, 3rd Floor, Washington, DC 20005, (202) 624–0892. A copy of the proposed consent decree may be obtained in person or by mail from the Consent Decree Library, 1120 G Street, NW, 3rd Floor, Washington, DC 20005. In requesting a copy, please enclose a check (there is a 25 cent per page reproduction cost) in the amount of $41.25 payable to the Consent Decree Library.

Bruce S. Gelber,

Deputy Chief, Environmental Enforcement Section, Environmental and Natural Resources Division.

[FR Doc. 99–7973 Filed 3–31–99; 8:45 am]

BILLING CODE 4410–15–M

DEPARTMENT OF JUSTICE

Notice of Lodging of Consent Decree Pursuant to the Comprehensive Environmental Response, Compensation and Liability Act

In accordance with Departmental policy, 28 CFR 50.7, notice is hereby given that a proposed Consent Decree in *United States* v. *Linda Carroll and Carroll Carolina Corp.*, Civil Action No. 7:99–CV–44–F(1) was lodged with the United States District Court for the Eastern District of North Carolina on March 17, 1999. The proposed Consent Decree resolves the United States' claims against Linda Carroll and Carroll Carolina Corp. pursuant to Section 107 of the Comprehensive Environmental Response, Compensation, and Liability Act of 1980 (''CERCLA''), as amended. The settling defendants are alleged to be liable under section 107 of CERCLA for costs incurred and to be incurred by the United States Environmental Protection Agency and others during a cleanup of the Old ATC Refinery Site in Wilmington, North Carolina. Under the Consent Decree, the settling defendants agree to reimburse the United States in the amount of $85,000. The timing of such payment is dependent on various events outlined in the Decree.

The Department of Justice will receive, for a period of thirty (30) days from the date of this publication, comments relating to the proposed Consent Decree. Comments should be addressed to the Assistant Attorney General for the Environment and Natural Resources Division, U.S. Department of Justice, P.O. Box 7611, Washington, DC 20044; and refer to *United States* v. *Linda Carroll et al.*, DOJ Ref. # 90–11–2–1192/2.

The proposed settlement agreement may be examined at the Office of the United States Attorney, 310 New Bern Ave., Suite 800, Raleigh, NC 27601; and at the office of the Environmental Protection Agency, Region 4, 61 Forsyth Street, S.W., Atlanta, GA 30303; and at the Consent Decree Library, 1120 G Street, NW, 3rd Floor, Washington, DC 20005, (202) 624–0892. A copy of the proposed Consent Decree may be obtained in person or by mail from the Consent Decree Library, 1120 G Street, NW, 3rd Floor, Washington, DC 20005. In requesting a copy please refer to the referenced case and enclose a check in the amount of $7.50 (25 cents per page reproduction costs), payable to the Consent Decree Library.

Joel M. Gross,

Chief, Environmental Enforcement Section, Environment and Natural Resources Division.

[FR Doc. 99–7974 Filed 3–31–99; 8:45 am]

BILLING CODE 4410–15–M

DEPARTMENT OF JUSTICE

Antitrust Division

United States v. Central Parking Corporation and Allright Holdings, Inc.; Proposed Final Judgment and Competitive Impact Statement

Notice is hereby given pursuant to the Antitrust Procedures and Penalties Act, 15 U.S.C. section 16(b) through (h), that a proposed Final Judgment, Stipulation and Competitive Impact Statement have been filed with the United States District Court for the District of Columbia in *United States* v. *Central Parking Corporation and Allright Holdings, Inc.*, No. 1:99CV00652. On March 16, 1999, the United States filed a Complaint alleging that the proposed merger of Central Parking and Allright Holdings would violate section 7 of the Clayton Act, 15 U.S.C. 18. The proposed Final Judgment, filed the same time as the Complaint, requires the defendants to divest their interest in certain parking facilities in Cincinnati and Columbus, Ohio; Nashville, Knoxville, and Memphis, Tennessee; Dallas, Houston, El Paso, and San Antonio, Texas; Baltimore, Maryland; Denver, Colorado; Jacksonville, Tampa, and Miami, Florida; San Francisco, California; Kansas City, Missouri; New York, New York; and Philadelphia, Pennsylvania. Copies of the Complaint, proposed Final Judgment and Competitive Impact Statement are available for inspection on the Antitrust Division's web site (www.usdoj.gov/atr/cases.html); at the Antitrust Division, 325 7th Street, NW Room 215, Washington, DC 20530 (telephone: 202–514–2481); and at the Office of the Clerk of the United States District Court for the District of Columbia, Washington, DC.

Public comment is invited within 60 days of the date of this notice. Comments, with Antitrust Division responses, will be published in the **Federal Register** and filed with the Court. Comments should be directed to Craig Conrath, Chief, Merger Task Force, Antitrust Division, 1401 H Street, NW, Suite 4000, Washington, DC 20530 (Tel. 202–307–0001).

Constance K. Robinson,

Director of Operations and Merger Enforcement.

Stipulation

It is stipulated by and between the undersigned parties, by their respective attorneys, as follows:

1. The Court has jurisdiction over the subject matter of this action and over each of the parties hereto, and venue of this action is proper in the District Court for the District of Columbia;

2. The parties stipulate that a Final Judgment in the form hereto attached may be filed and entered by the Court, upon the motion of any party or upon the Court's own motion, at any time after compliance with the requirements of the Antitrust Procedures and Penalties Act (15 U.S.C. 16), and without further notice to any party or other proceedings, provided that the United States has not withdrawn its consent, which it may do at any time before the entry of the proposed Final Judgment by serving notice thereof on defendants and by filing that notice with the Court;

3. The defendants (as defined in Section II of the proposed Final Judgment attached hereto) agree to abide by and comply with the provisions of the proposed Final Judgment pending entry of the Final Judgment by the Court, and shall, from the date of the signing of this Stipulation by the parties, comply with all the terms and provisions of the proposed Final Judgment as though the same were in full force and effect as an order of the Court;

4. In the event the United States withdraws its consent, as provided in paragraph 2 above, or if the proposed Final Judgment is not entered pursuant to this Stipulation, the time has expired for all appeals of any Court ruling declining entry of the proposed Final Judgment, and the Court has not otherwise ordered continued compliance with the terms and provisions of the proposed Final Judgment, this Stipulation shall be of no effect whatever, and the making of this Stipulation shall be without prejudice to any party in this or any other proceeding;

5. Central and Allright represent that the divestitures ordered in the proposed Final Judgment can and will be made, and that Central and Allright will later raise no claims of hardship or difficulty as grounds for asking the court to modify any of the divestiture provisions contained therein;

6. All parties agree that this agreement can be signed in multiple counterparts.

Dated: March 12, 1999.

For Plaintiff United States

Allee A. Ramadhan (162131),

John C. Filippini (165159),

Joseph M. Miller (439965),

U.S. Department of Justice, Antitrust Division, Merger Task Force, 1401 H Street, NW, Suite 4000, Washington, DC 20005, (202) 307–0001.

For Defendant Central Parking Corporation

David Marx, Jr.,

James H. Sneed (194803),

McDermott, Will & Emery, 227 West Monroe Street, Chicago, IL 60606, (312) 984–7668.

For Defendant Allright Holdings, Inc.

Michael L. Weiner,

Charles B. Crisman, Jr. (240135),

Skadden, Arps, Slate, Meagher & Flom L.L.P., 919 Third Avenue, New York, NY 10022, (212) 735–2632.

Final Judgment

Whereas, plaintiff, the United States of America, and defendants Central Parking Corporation (''Central'') and Allright Holdings, Inc. (''Allright''), by their respective attorneys, having consented to the entry of this Final Judgment without trial or adjudication of any issue of fact or law herein, and without this Final Judgment constituting any evidence against or an admission by any party with respect to any issue of law or fact herein:

And whereas, defendants have agreed to be bound by the provision of this Final Judgment pending its approval by the Court;

And whereas, the essence of this Final Judgment is the prompt and certain divestiture of parking facilities to ensure that competition is not substantially lessened;

And whereas, plaintiff requires defendants to make certain divestitures for the purpose of preserving competition in the off-street parking services markets specified in the Complaint;

And whereas, defendants have represented to the plaintiff that the divestitures ordered herein can and will be made and that defendants will later raise no claims of hardship or difficulty as grounds for asking the Court to modify any of the divestiture provisions contained below;

Now, therefore, before the taking of any testimony, and without trial or adjudication of any issue of fact or law herein, and upon consent of the parties hereto, it is hereby *ordered, adjudged, and decreed* as follows:

I. Jurisdiction

This Court has jurisdiction over each of the parties hereto and over the subject matter of this action. The Complaint states a claim upon which relief may be granted against defendants, as hereinafter defined, under section 7 of the Clayton Act, as amended, 15 U.S.C. 18.

II. Definitions

As used in this Final Judgment:

A. ''Central'' means defendant Central Parking Corporation, a Tennessee corporation with its headquarters in Nashville, Tennessee, and includes its successors and assigns, and its subsidiaries, divisions, groups, affiliates, partnerships, joint ventures, directors, officers, managers, agents, and employees.

B. ''Allright'' means defendant Allright Holdings, Inc., a Delaware corporation with its headquarters in Houston, Texas, and includes its successors and assigns, and its subsidiaries, divisions, groups, affiliates, partnerships, joint ventures, directors, officers, managers, agents, and employees.

C. ''Owned Parking Facilities'' shall consist of all assets and properties owned by defendants listed in Schedule A.

D. ''Parking Facility Agreements'' shall consist of all agreements between or among the defendants and the owner or manager of the parking facilities listed in Schedule B.

E. ''Acquirer'' means the entity or entities to whom the defendants divest the Parking Facilities, or that succeed to the defendants' interests in any Parking Facility Agreement that is transferred pursuant to this Final Judgment.

F. ''Parking Facilities'' means the properties listed in Schedules A and B.

G. ''Divest'' or ''Divestiture'' means, (1) in connection with the Owned Parking Facilities listed in Schedule A, their sale, and (2), in connection with the Parking Facilities listed in Schedule B, the transfer of the Parking Facility Agreements by termination or assignment.

III. Applicability

A. The provisions of this Final Judgment apply to the defendants, their successors and assigns, subsidiaries, directors, officers, managers, agents, and employees, and all other persons in

active concert or participation with any of them who shall have received actual notice of this Final Judgment by personal service or otherwise.

B. Defendant Central shall require, as a condition of the sale of all or substantially all of its assets, that the Acquirer or Acquirers agree to be bound by the provisions of this Final Judgment; however, defendant Central need not obtain such an agreement from an Acquirer in connection with the divestiture of the Parking Facilities.

IV. Divestitures

A. Defendants are hereby ordered and directed, in accordance with the terms of this Final Judgment, within one hundred and fifty (150) calendar days after the filing of the Complaint in this matter, or within five (5) days after notice of entry of the Final Judgment, whichever is later, to divest all Parking Facilities identified in Schedules A and B to this Final Judgment as viable, ongoing parking services businesses. The divestiture of Parking Facilities shall be to an Acquirer or Acquirers acceptable to the United States in its sole discretion.

B. In accomplishing the divestitures ordered by this Final Judgment, defendants promptly shall make known, by usual and customary means, the availability of the Parking Facilities to be divested. Defendants shall inform any person making an inquiry that the divestiture is being made pursuant to this Final Judgment and provide such person with a copy of this Final Judgment. Defendants shall also offer to furnish to all bona fide prospective Acquirers, subject to customary confidentiality assurances, all information regarding the Parking Facilities customarily provided in a due diligence process except such information subject to attorney-client privilege or attorney work-product privilege. Defendants shall make available such information to the United States at the same time that such information is made available to any other person.

C. Defendants shall permit prospective Acquirers of the Parking Facilities to have access to personnel and to any and all zoning, building, and other permit documents and information, and to make inspection of the Parking Facilities and of any and all financial, operational, or other documents and information customarily provided as part of a due diligence process.

D. Defendants shall use their best efforts to accomplish the divestitures ordered by this Final Judgment as expeditiously as possible. The United States, in its sole discretion, may extend the time period for any divestiture for two (2) additional thirty (30) day periods, not to exceed sixty (60) calendar days in total.

E. Defendants shall use all commercially practical means to enable the Acquirer of any Parking Facility to employ any person whose primary responsibility concerns any parking services business connected with the Parking Facilities. Defendants shall not interfere with any negotiations by any Acquirer to employ any Central or Allright (or former Central or Allright) employee where primary responsibility concerns any parking services business connected with the Parking Facilities. Defendants shall provide to any Acquirer information relating to such personnel to enable the Acquirer to make offers of employment, and defendants shall remove any impediments that may deter these employees from accepting such employment, including but not limited to, non-compete agreements.

F. Defendants shall not take any action, direct or indirect, that will impede in any way the operation of any parking business connected with the Parking Facilities, or take any action, direct or indirect, that would impede the divestiture of any Parking Facility.

G. Defendants may not enter into any agreement to operate any parking business at the facilities listed in Scheduled B within two (2) years of divestiture.

H. Unless the United States otherwise consents in writing, the divestitures pursuant to Section IV, or by trustee appointed pursuant to Section VI, shall include all the Parking Facilities and be accomplished by divesting the Parking Facilities to an Acquirer or Acquirers in such a way as to satisfy the United States, in its sole discretion, that the Parking Facilities can and will be used by the Acquirers as viable ongoing off-street parking services businesses, and the divestitures will remedy the harm alleged in the Complaint. The divestitures, whether pursuant to Section IV or Section VI of the Final Judgment, shall be made to an Acquirer or Acquirers that, in the United States' sole judgment, has the intent and capability (including the necessary managerial, operational, and financial capability) of competing effectively with the defendants in providing off-street parking services.

V. Notice of Proposed Divestitures

A. Within two (2) business days following execution of a definitive agreement, contingent upon compliance with the terms of this Final Judgment, to effect, in whole or in part, any proposed divestiture pursuant to Section IV or VI of this Final Judgment, defendants or the trustee, whichever is then responsible for effecting the divestiture, shall notify the United States of the proposed divestiture. If the trustee is responsible, it shall similarly notify defendants. The notice shall set forth the details of the proposed divestiture.

B. The notice of any proposed divestiture shall list the name, address, and telephone number of each person not previously identified who offered to, or expressed an interest in or a desire to, acquire any ownership, management or leasehold interest in the facility to be divested that is the subject of the binding contract, together with full details of same. Within fifteen (15) calendar days of receipt by the United States of a divestiture notice, the United States, in its sole discretion, may request from defendants, the proposed Acquirer, the trustee, or any other third party additional information concerning the proposed divestiture and the proposed Acquirer. Defendants and the trustee shall furnish any additional information requested from them within fifteen (15) calendar days of the receipt of the request, unless the parties shall otherwise agree. Within thirty (30) calendar days after receipt of the notice, or within twenty (20) calendar days after the United States has been provided the additional information requested from the defendants, the proposed Acquirer, the trustee, or any third party, whichever is later, the United States shall provide written notice to defendants and the trustee, if there is one, stating whether or not it objects to the proposed divestiture. If the United States provides written notice to defendants (and the trustee, if applicable) that it does not object, then the divestiture may be consummated, subject only to defendants' limited right to object to the sale under Section VI(F) of this Final Judgment.

C. Absent written notice that the United States does not object to the proposed Acquirer, or upon objection by the United States, a proposed divestiture under Section IV or Section VI may not be consummated. Upon objection by defendants under the provision in Section VI(F), a divestiture proposed under Section VI shall not be consummated unless approved by the Court.

VI. Appointment of Trustee

A. In the event that defendants have not divested the Parking Facilities as specified in Section IV of this Final Judgment, the Court shall appoint, on

application of the United States, a trustee selected by the United States, to effect the divestiture of each such Parking Facility.

B. After the appointment of a trustee becomes effective, only the trustee shall have the right to divest Parking Facilities.

C. The trustee shall have the power and authority to accomplish any and all divestitures of Parking Facilities at the best price then obtainable upon a reasonable effort by the trustee, subject to the provisions of Sections IV, V, and VI of this final Judgment, and shall have such other powers as the Court shall deem appropriate.

D. Subject to Section VI(G) of this Final Judgment, the trustee shall have the power and authority to hire at the cost and expense of the defendants any investment bankers, attorneys, or other agents reasonably necessary in the judgment of the trustee to assist in the divestitures or terminations, and such professionals and agents shall be accountable solely to the trustee. The trustee shall have the power and authority to accomplish the divestitures at the earliest possible time.

E. The trustee shall have the authority to accomplish the divestitures of Parking Facilities to an Acquirer or Acquirers acceptable to the United States, in its sole discretion, and shall have such other powers as this Court shall deem appropriate.

F. Defendants shall not object to a divestiture by the trustee on any ground other than the trustee's malfeasance. Any such objections by defendants must be conveyed in writing to the United States and the trustee within ten (10) calendar days after the trustee has provided the notice required under Section V of this Final Judgment.

G. The trustee shall serve at the cost and expense of defendants, on such terms and conditions as the Court may prescribe, and shall account for all monies derived from the divestiture of each Parking Facility divested by the trustee. The trustee shall also account for all costs and expenses incurred to accomplish the divestitures. After approval by the Court of the trustee's accounting, including fees for its services and those of any professionals and agents retained by the trustee, all remaining money shall be paid to defendants and the trust shall then be terminated. The compensation of such trustee and of any professionals and agents retained by the trustee shall be reasonable in light of the value of the divested facility and based on a fee arrangement providing the trustee with an incentive based on the price and terms of the divestiture, and the speed with which it is accomplished.

H. Defendants shall use their best efforts to assist the trustee in accomplishing the required divestitures, including best efforts to effect all necessary regulatory approvals. The trustee and any consultants, accountants, attorneys, and other persons retained by the trustee shall have full and complete access to the personnel, books, records, and facilities of the Parking Facilities to be divested, and defendants shall develop financial or other information relevant to the businesses to be divested customarily provided in a due diligence process as the trustee may reasonably request, subject to customary confidentiality assurances. Defendants shall take no action to interfere with or impede the trustee's accomplishment of the divestitures. Defendants shall permit bona fide prospective Acquirers of the Parking Facilities to have reasonable access to personnel and to make such inspection of physical facilities and any and all financial, operational or other documents and other information as may be relevant to the divestitures required by this Final Judgment.

I. After its appointment, the trustee shall file monthly reports with the parties and the Court setting forth the trustee's efforts to accomplish the divestitures ordered under this Final Judgment; provided, however, that to the extent such reports contain information that the trustee deems confidential, such reports shall not be filed in the public docket of the Court. Such reports shall include the name, address and telephone number of each person who, during the preceding month, made an offer to acquire, expressed an interest in acquiring, entered into negotiations to acquire, or was contacted or made an inquiry about acquiring, any interest in the Parking Facilities to be divested, and shall describe in detail each contact with any such person during that period. The trustee shall maintain full records of all efforts made to divest the Parking Facilities.

J. If the trustee has not accomplished such divestitures within ninety (90) days after its appointment, the trustee thereupon shall file promptly with the Court a report setting forth (1) the trustee's efforts to accomplish the required divestitures, (2) the reasons, in the trustee's judgment, why the required divestitures have not been accomplished, and (3) the trustee's recommendations; provided, however, that to the extent such reports contain information that the trustee deems confidential, such reports shall not be filed in the public docket of the Court. The trustee shall at the same time furnish such report to the parties, who shall each have the right to be heard and to make additional recommendations consistent with the purpose of the trust. The Court shall enter thereafter such orders as it shall deem appropriate in order to carry out the purpose of the Final Judgment which may, if necessary, include extending the trust and the term of the trustee's appointment by a period requested by the United States.

VII. Affidavits

A. Within twenty (20) calendar days of the filing of the Complaint in this matter and every thirty (30) calendar days thereafter until the divestitures have been completed pursuant to Section IV or VI of this Final Judgment, defendants shall deliver to the United States an affidavit as to the fact and manner of compliance with Section IV or VI of this Final Judgment. Each such affidavit shall include, *inter alia*, the name, address, and telephone number of each person who, at any time after the period covered by the last such report, made an offer to acquire, expressed an interest in acquiring, entered into negotiations to acquire, or was contacted or made an inquiry about acquiring, any interest in the Parking Facilities to be divested, and shall described in detail each contact with any such person during that period. Each such affidavit shall also include a description of the efforts that defendants have taken to solicit an Acquirer for any and all Parking Facilities, to provide required information to prospective Acquirers, including the limitations, if any, on such information. Assuming the information set forth in the affidavit is true and complete, any objection by the United States to information provided by defendants, including limitations on information, shall be made within fourteen (14) days of receipt of such affidavit.

B. Until one year after all the divestitures have been completed, defendants shall preserve all records of all efforts made to effect each divestiture.

VIII. Compliance Inspection

For purposes of determining or securing compliance with the Final Judgment and subject to any legally recognized privilege, from time to time:

A. Duly authorized representatives of the United States Department of Justice, upon written request of the Assistant Attorney General in charge of the Antitrust Division, and on reasonable notice to defendants made to their principal offices, shall be permitted:

1. Access during office hours of defendants to inspect and copy all books, ledgers, accounts, correspondence, memoranda, and other records and documents in the possession or under the control of defendants, who may have counsel present, relating to the matters contained in this Final Judgment; and

2. Subject to the reasonable convenience of defendants and without restraint or interference from them, to interview, either informally or on the record, their officers, employees, and agents, who may have counsel present, regarding any such matters.

B. Upon the written request of the Assistant Attorney General in charge of the Antitrust Division, defendants shall submit such written reports, under oath if requested, with respect to any matter contained in the Final Judgment.

C. No information or documents obtained by the means provided in Sections VII or VIII of this Final Judgment shall be divulged by a representative of the United States to any person other than a duly authorized representative of the Executive Branch of the United States, except in the course of legal proceedings to which the United States is a party (including grand jury proceedings), or for the purpose of securing compliance with this Final Judgment, or as otherwise required by law.

D. If at the time information or documents are furnished by defendants to United States, defendants represent and identify in writing the material in any such information or documents to which a claim of protection may be asserted under Rule 26(c)(7) of the Federal Rules of Civil Procedure, and defendants mark each pertinent page of such material, ''Subject to claim of protection under Rule 26(c)(7) of the Federal Rules of Civil Procedure,'' then ten (10) calendar days notice shall be given by the United States to defendants prior to divulging such material in any legal proceeding (other than a grand jury proceeding) to which defendants are not a party.

IX. Retention of Jurisdiction

Jurisdiction is retained by this Court for the purpose of enabling any of the parties to this Final Judgment to apply to this Court at any time for such further orders and directions as may be necessary or appropriate for the construction or carrying out of this Final Judgment, for the modification of any of the provisions hereof, for the enforcement of compliance herewith, and for the punishment of any violations hereof.

X. Financing

Defendants are ordered and directed not to finance all or part of any divestiture made pursuant to Sections IV or VI of this Final Judgment.

XI. Termination

Unless this Court grants an extension, this Final Judgment will expire upon the tenth anniversary of the date of its entry.

XII. Public Interest

Entry of this Final Judgment is in the public interest.

Dated _____, 1999.

Court approval subject to procedures of Antitrust Procedures and Penalties Act, 15 U.S.C. 16.

_____

United States District Judge

SCHEDULE A

City	Facility
San Antonio, TX	Allright Facility 45 at 408 Martin St.

SCHEDULE B

City	Facility
Baltimore, MD	Central Facility 40 at 1 South Street.
Cincinnati, OH	Allright Facility 81 at 312 Elm St.
	Central Facility 20 at 30 W. 4th St.
Columbus, OH	Allright Facility 33 at 503 S. Front St.
	Central Facility 117 at 329 State St.
Dallas, TX	Allright Facility 381 at 608 N. St Paul St.
	Allright Facility 382 at 2013 San Jacinto St.
	Allright Facility 383 at 502 N. St Paul St.
	Central Facility 61 at Corner of Routh St. and Ross St.
Denver, CO	Allright Facility 108 at 1801 Market St.
	Allright Facility 268 at 1735 Blake St.
	Allright Facility 269 at 1775 Blake St.
	Allright Facility 485 at 1670 Larimer St.
	Central Facility 21 at 17th and Blake St.
	Central Facility 50 at 1627 California St.
El Paso, TX	Allright Facility 208 at 149 Ochoa St.
	Allright Facility 205 at 605 Myrtle Ave.
Houston, TX	Allright Facility 589 at 1110 Lamar St.
	Central Facility 31 at 1111 Fannin St.
	Allright Facility 168 at 1204 Bagby St.
	Allright Facility 501 at 1000 Bell Ave.
Jacksonville, FL	Allright Facility 13 at 425 W. Adams St.
	Allright Facility 21 at 304 N. Pearl St.
	Allright Facility 22 at 325 N. Broad St.
	Allright Facility 82 at SW Corner Clay/Forsyth.
	Central Facility 107 at 213–4 Julie St.
Kansas City, MO	Allright Facility 155 at 714 E. 11th St.
Knoxville, TN	Allright Facility 110 at 505 Locust St S.W.
	Allright Facility 149 at 408 Church Ave. S.W.
	Allright Facility 181 at 508A Clinch Ave.
Memphis, TN	Allright Facility 335 at 215 Jefferson Ave.

SCHEDULE B—Continued

City	Facility
	Allright Facility 333 at 199 Jefferson Ave.
	Allright Facility 381 at 120 Union Ave.
	Allright Facility 141 at 188 South Main St.
	Central Facility 510 at 54 N. 2nd St.
	Central Facility 511 at 160 Court St.
	Central Facility 512 at 20 S. Front St.
	Central Facility 513 at 100 N. Front St.
	Central Facility 517 at 236 Adams St.
	Central Facility 525 at 444 North Main St.
Miami, FL	Allright Facility 161 at 153 SE 2nd St.
	Central Facility 6136 at 300 SE 3rd Ave.
	Central Facility 6137 at 301 SE 3rd Ave.
	Central Facility 6138 at 200 SE 3rd Ave.
Nashville, TN	Allright Facilities 64 and 118 at 210–220 4th Ave. S.
	Allright Facility 11 at 143 7th Ave. No.
	Allright Facility 34 at 719–721 Church St.
	Allright Facility 115 at 217 7th Ave. So.
	Allright Facility 70 at 703 3rd Ave. N.
	Allright Facility 6 at 168 8th Ave. N.
	Allright Facility 114 at SW Corner of 2nd Ave. S and Molloy St.
	Central Facility 89 at 501 Broadway.
	Central Facility 85 at 149 7th Ave. S.
	Central Facility 27 at 128 8th Ave. N.
	Central Facility 109 at 147 4th Avenue N.
	Central Facility 36 at 144 5th Avenue N.
	Central Facility 53 at 116 5th Avenue N.
	Allright Facilities 35 and 48 at 411 Church St.
New York, NY	Central Facility 2227 at 345 W. 58th St.
	Allright Facility 249 at 14–26 S. William St.
	Allright Facility 41 at 136 W. 40th St.
	Allright Facility 282 at 401–471 W. 42nd St.
Philadelphia, PA	Central Facility 27 at 210 W. Rittenhouse Sq.
	Allright Facility 81 at 1215 Walnut St.
San Antonio, TX	Allright Facility 38 at 422 Bonham St.
	Allright Facility 18 at 309 Elm St.
	Allright Facility 42 at 303 Blum St.
	Central Facility 709 at 300 East Houston St.
	Central Facility 789 at 240 Broadway St.
	Central Facility 790 at 110 Broadway St.
	Central Facility 794 at 213 Broadway St.
San Francisco, CA	Central Facility 135 at 3rd. and Brannan St.
Tampa, FL	Allright Facility 415 at 1001 N. Morgan St.

Certificate of Service

I hereby certify that on March 16, 1999, I served a copy of the Complaint, Final Judgment and Stipulation on each of the defendants listed below:

Counsel for Central Parking Corporation

David Marx, Jr., Esq.,

McDermott, Will & Emery, 227 West Monroe Street, Chicago, IL 60606, (312) 984–7668 (By facsimile and express mail).

Counsel for Allright Holdings, Inc.

Michael L. Weiner, Esq.,

Skadden, Arps, Slate, Meagher & Flom L.L.C., 919 Third Avenue, New York, NY 10022, (212) 735–3000 (By facsimile and express mail).

Joseph M. Miller,

DC Bar No. 439965, U.S. Department of Justice, Antitrust Division, 1401 H Street, NW, Suite 4000, Washington, D.C. 20530, (202) 305–8462.

Competitive Impact Statement

The United States, pursuant to Section 2(b) of the Antitrust Procedures and Penalties Act (''APPA''), 15 U.S.C. 16(b)–(h), files this Competitive Impact Statement relating to be proposed Final Judgment submitted for entry in this civil antitrust proceeding.

I. Nature and Purpose of the Proceeding

The plaintiff filed a civil antitrust Complaint in this Court on March 16, 1999, alleging that the proposed merger between Central Parking Corporation (Central) and Allright Holdings, Inc. (Allright) would violate section 7 of the Clayton Act, 15 U.S.C. 18. The Complaint alleges that Central and Allright own, lease, and manage off-street parking facilities for motorists in several cities of the United States, and that they are direct and substantial competitors of each other in certain local parking markets identified in the Complaint. The Complaint also states that Central is the largest parking management company, in terms of parking locations, spaces, and parking revenues, that Allright is the second largest parking management company in

the United States, and that they are two of only four such companies with a nationwide presence. The proposed acquisition would give Central a dominant market share of off-street parking facilities for motorists in local markets identified in the Complaint. In such markets, meaningful entry would be unlikely, untimely, and insufficient to undermine anticompetitive effects likely to result from the proposed merger.

The prayer for relief seeks: (a) adjudication that Central's proposed merger with Allright would violate section 7 of the Clayton Act; (b) permanent injunctive relief preventing the consummation of the proposed acquisition; (c) and such relief as is proper.

A proposed settlement has now been reached which is designed to eliminate the anticompetitive effects likely to result from the proposed merger. Within five months after the filng of the Complaint in this case, the defendants have agreed to divest their parking facilities in those local markets in which they are likely to be able to exert market power as a result of the proposed merger. A Stipulation and proposed Final Judgment embodying the settlement has been filed with the Court.

The proposed Final Judgment orders the defendants to divest certain of their off-street parking facilities which they operate, within five months after the filing of the Complaint in this case, unless the United States grants an extension of time. If the defendants fail to divest these parking properties within the five month period, the Court may appoint a trustee to divest the parking facilities identified in the Final Judgment. The proposed Final Judgment also prohibits the defendants from taking any action that would impede the operation of the parking facilities. The proposed Final Judgment also requires that the divestitures be made to an acquirer or acquirers that have the capability and intent to compete effectively in the provision of off-street parking services.

The plaintiff and the defendants have stipulated that the proposed Final Judgment may be entered after compliance with the APPA. Entry of the proposed Final Judgment would terminate this action, except that the Court would retain jurisdiction to construe, modify, or enforce the provisions of the proposed Final Judgment and to punish violations thereof.

II. The Alleged Violations

A. The Defendants

Central is headquartered in Nashville, Tennessee and provides off-street parking services to motorists in the United States, Canada, Mexico, Germany, Spain, and Malaysia. It is the largest company in the United States offering such services, in terms of the number of facilities. The company operates over 2,400 parking facilities containing over a million spaces. Its portfolio of parking facilities include owned, leased and managed properties. In fiscal year 1997, Central had revenues of $222,976,000.

Allright is headquartered in Houston, Texas and provides off-street parking services to motorists in the United States. The company is currently 44.5% owned by Apollo Real Estate Investment Fund II, L.P., 44.5% owned by AEW Partners L.P., 9.1% owned by management, and 1.9% owned by certain financial advisors to Apollo and AEW and one member of the previous Allright management team. It is the second largest parking company, in terms of the number of locations in the United States. Allright operates over 2,300 parking facilities containing nearly 600,000 spaces. Like Central, its portfolio of parking facilities includes owned, leased and managed properties. In fiscal year 1997, Allright had annual revenues of $178,637,000.

B. Description of the Events Giving Rise to the Alleged Violation

On or about September 21, 1998, Central and Allright entered into an agreement whereby Allright will become a wholly owned subsidiary of Central, which will continue as the surviving entity in structure and in name. Current Central shareholders will own approximately 80% of Central's common stock, and current Allright shareholders will own approximately 20% of Central's common stock. The total value of the proposed merger at the time it was announced was approximately $585 million.

C. Anticompetitive Consequences of the Proposed Merger

The Complaint alleges that off-street parking services for motorists constitutes a line of commerce, or relevant product market, for antitrust purposes. It also alleges that relevant geographic markets in which to measure the effects of the proposed merger are no larger than the central business districts (CBDs) of the cities identified in the Complaint. The Complaint further alleges that Central and Allright are direct and substantial competitors in offering off-street parking services to consumers.

Central and Allright establish parking prices, either unilaternally or in conjunction with the owners of parking facilities, on a location-by-location basis. In determining the appropriate price and service for any location, the defendants consider the prices charged by other providers of off-street parking services in the geographic market, as well as overall demand for parking services, and the availability of other off-street parking locations. The Complaint alleges that the proposed merger threatens competition by substantially increasing Central's market shares in the relevant markets, and accordingly, would allow Central to exercise substantial control over prices and services available to consumers.

Entry into the relevant markets is unlikely to occur in response to a small but significant price increase. To enter a relevant market and discipline a noncompetitive price increase, a firm must add to the supply of parking spaces that motorists view as substitutes. Creation of new parking spaces in a CBD, however, is most often a byproduct of construction or tearing down of buildings. Given the local character of competition, the cost of land, the limited availability of substitutable parking facilities, and the alternative options for the use of convenient land in the market, entry cannot be viewed as a likely and timely response that would undermine an anticompetitive price increase.

III. Explanation of the Proposed Final Judgment

The proposed Final Judgment would preserve competition in the relevant markets identified in the Complaint by reducing Central's market share where Central would be dominant as a result of the proposed merger. To that end, it requires the divestiture of 74 off-street parking facilities owned, leased or managed by Central and Allright in 18 cities. This relief is designed to ensure that the merger does not increase Central's market share in the local markets of the relevant cities to a level likely to lend to the exercise of market power.

Section IV of the proposed Final Judgment requires the defendants to divest those parking facilities identified in Schedules A and B of the Final Judgment as viable, ongoing businesses. Under the proposed Final Judgment, the defendants must take all reasonable steps necessary to accomplish quickly the divestiture of the specified assets, and shall cooperate with bona fide prospective purchasers by supplying all

information relevant to the proposed sale. Unless the United States grants an extension of time, the defendants must divest the parking facilities within 150 days after the Complaint is filed. Until the divestitures take place, the parking properties must continue to be operated as parking facilities.

The defendants are also prohibited from entering into any agreement to operate any of the leased or managed properties divested within two (2) years of the divestiture.

If the defendants fail to divest any of the parking facilities within the time period specified in the Final Judgment, or extension thereof, the Court, upon application of the United States, shall appoint a trustee to effect the required divestitures. If a trustee is appointed, Section VI of the proposed Final Judgment provides that the defendants will pay all costs and expenses of the trustee and any professionals and agents retained by the trustee. The compensation paid to the trustee and any persons retained by the trustee shall be reasonable and shall be based on a fee arrangement providing the trustee with an incentive based on the price and terms of the divestitures and the speed with which they are accomplished. After appointment, the trustee will file monthly reports with the United States, the defendants and the Court, setting forth the trustee's efforts to accomplish the divestitures ordered under the proposal Final Judgment. If the trustee has not accomplished the divestitures within ninety (90) days after its appointment, the trustee shall promptly file with the Court a report setting forth (1) the trustee's efforts to accomplish the required divestitures, (2) the reasons, in the trustee's judgment, why the required divestitures have not been accomplished, and (3) the trustee's recommendations. At the same time, the trustee will furnish such report to the United States and defendants, who will each have the right to be heard and to make additional recommendations consistent with the purpose of the trust.

The relief in the proposed Final Judgment is intended to remedy the likely anticompetitive effects of the proposed merger between Allright and Central. Nothing in the proposed Final Judgment is intended to limit the United States's ability to investigate or bring actions, where appropriate, challenging other past or future activities of the defendants.

IV. Remedies Available to Potential Private Litigants

Section 4 of the Clayton Act, 15 U.S.C. 15, provides that any person who has been injured as a result of conduct prohibited by the antitrust laws may bring suit in federal court to recover three times the damages the person has suffered, as well as costs and reasonable attorneys' fees. Entry of the proposed Final Judgment will neither impair nor assist the bringing of any private antitrust damage action. Under the provisions of Section 5(a) of the Clayton Act, 15 U.S.C. 16(a), the proposed Final Judgment has no *prima facie* effect in any subsequent private lawsuit that may be brought against defendants.

V. Procedures Available for Modification of the Proposed Final Judgment

The United States and the defendants have stipulated that the proposed Final Judgment may be entered by the Court after compliance with the provisions of the APPA, provided that the United States has not withdrawn its consent. The APPA conditions entry upon the Court's determination that the proposed Final Judgment is in the public interest.

The APPA provides a period of at least sixty (60) days preceding the effective date of the proposed Final Judgment within which any person may submit to the United States written comments regarding the proposed Final Judgment. Any person who wishes to comment should do so within sixty (60) days of the date of publication of this Competitive Impact Statement in the **Federal Register**. The United States will evaluate and respond to the comments. All comments will be given due consideration by the Department of Justice, which remains free to withdraw its consent to the proposed Final Judgment at any time prior to its entry. The comments and the response of the United States will be filed with the Court and published in the **Federal Register**.

Any such written comments should be submitted to: Craig W. Conrath, Chief, Merger Task Force, Antitrust Division, United States Department of Justice, 1401 H Street, NW, Suite 4000, Washington, DC 20530.

The proposed Final Judgment provides that the Court retains jurisdiction over this action, and the parties may apply to the Court for any order necessary or appropriate for the modification, interpretation, or enforcement of the Final Judgment.

VI. Alternatives to the Proposed Final Judgment

The United States considered, as an alternative to the proposed Final Judgment, the filing of a complaint and a full trial on the merits of its complaint. The United States is satisfied, however, that the divestitures as called for by the proposed Final Judgment and other relief contained in the proposed Final Judgment will preserve viable competition in the relevant markets. Thus, the proposed Final Judgment would achieve the relief the Government would have sought through litigation, but avoids the time, expense and uncertainty of a full trial on the merits of the complaint.

VII. Standard of Review Under the APPA for Proposed Final Judgment

The APPA requires that proposed consent judgments in antitrust cases brought by the United States be subject to a sixty (60) day comment period, after which the court shall determine whether entry of the proposed Final Judgment ''is in the public interest.'' In making that determination, the court may consider—

(1) The competitive impact of such judgment, including termination of alleged violations, provisions for enforcement and modification, duration or relief sought, anticipated effects of alternative remedies actually considered, and any other considerations bearing upon the adequacy of such judgment;

(2) The impact of entry of such judgment upon the public generally and individuals alleging specific injury from the violations set forth in the complaint including consideration of the public benefit, if any, to be derived from a determination of the issues at trial.

15 U.S.C. 16(e). As the United States Court of Appeals for the D.C. Circuit recently held, this statute permits a court to consider, among other things, the relationship between the remedy secured and the specific allegations set forth in the government's complaint, whether the decree is sufficiently clear, whether enforcement mechanisms are sufficient, and whether the decree may positively harm third parties. *See United States* v. *Microsoft,* 56 F.3d 1448, 1461–62 (D.C. Cir. 1995).

In conducting this inquiry, ''[t]he Court is nowhere compelled to go to trial or to engage in extended proceedings which might have the effect of vitiating the benefits of prompt and less costly settlement through the consent decree process.'' [1] Rather,

[1] 119 Cong. Rec. 24598 (1973). *See United States* v. *Gillette Co.,* 406 F. Supp. 713, 715 (D. Mass. 1975). A ''public interest'' determination can be made properly on the basis of the Competitive Impact Statement and Response to Comments filed pursuant to the APPA. Although the APPA authorizes the use of additional procedures, 15 U.S.C. 16(f), those procedures are discretionary. A court need not invoke any of them unless it believes that the comments have raised significant issues and that further proceedings would aid the court in resolving those issues. *See* H.R. Rep. 93–1463, 93rd

[a]bsent a showing of corrupt failure of the government to discharge its duty, the Court, in making its public interest finding, should . . . carefully consider the explanations of the government in the competitive impact statement and its responses to comments in order to determine whether those explanations are reasonable under the circumstances.

United States v. *Mid-America Dairymen, Inc.*, 1997–1 Trade Cas. ¶ 61,508, at 71.980 (W.D. Mo. 1997).

Accordingly, with respect to the adequacy of the relief secured by the decree, a court may not ''engage in an unrestricted evaluation of what relief would best serve the public.'' *United States* v. *BNS, Inc.*, 858 F.2d 456, 462 (9th Cir. 1988), *citing United States* v. *Bechtel Corp.*, 648 F.2d 660, 666 (9th Cir. 1981); *see also Microsoft*, 56 F.3d at 1460–62. Precedent requires that

the balancing of competing social and political interests affected by a proposed antitrust consent decree must be left, in the first instance, to the discretion of the Attorney General. The court's role in protecting the public interest is one of insuring that the government has not breached its duty to the public in consenting to the decree. The court is required to determine not whether a particular decree is the one that will best serve society, but whether the settlement is ''*within the reaches of the public interest.*'' More elaborate requirements might undermine the effectiveness of antitrust enforcement by consent decree.[2]

The proposed Final Judgment, therefore, should not be reviewed under a standard of whether it is certain to eliminate every anticompetitive effect of a particular practice or whether it mandates certainty of free competition in the future. Court approval of a final judgment requires a standard more flexible and less strict than the standard required for a finding of liability. ''[A] proposed decree must be approved even if it falls short of the remedy the court would impose on its own, as long as it falls within the range of acceptability or is within the reaches of public interest.'' [3]

This is strong and effective relief that should fully address the likely competitive harm posed by the proposed merger.

VIII. Determinative Documents

There are no determinative materials or documents within the meaning of the APPA that were considered by the United States in formulating the proposed Final Judgment.

Dated: March 23, 1999.

Respectfully submitted,

Allee A. Ramadhan, John C. Filippini, Joseph M. Miller,

Attorneys, Merger Task Force, U.S. Department of Justice, Antitrust Division, 1401 H Street, N.W., Suite 4000, Washington, D.C. 20530, (202) 307–0001.

[FR Doc. 99–7975 Filed 3–31–99; 8:45 am]

BILLING CODE 4410–11–M

Cong. 2d Sess. 8–9 (1974), *reprinted in* U.S.C.C.A.N. 6535, 6538.

[2] *Bechtel*, 648 F.2d at 666 (citations omitted)(emphasis added); *see BNS*, 858 F.2d at 463; *United States* v. *National Broadcasting Co.*, 449 F. Supp. 1127, 1143 (C.D. Cal. 1978); *Gillette*, 406 F. Supp. at 716. *See also Microsoft*, 56 F.3d at 1461 (whether ''the remedies [obtained in the decree are] so inconsonant with the allegations charged as to fall outside of the 'reaches of the public interest' '')(citations omitted).

[3] *United States* v. *American Tel, and Tel Co.*, 552 F. Supp. 131, 151 (D.D.C. 1982), *aff'd. sub nom. Maryland* v. *United States*, 460 U.S. 1001 (1983), *quoting Gillette Co.*, 406 F. Supp. at 716 (citations omitted); *United States* v. *Alcan Aluminum Ltd.*, 605 F. Supp. 619, 622 (W.D. Ky. 1985).

DEPARTMENT OF JUSTICE

Drug Enforcement Administration

Manufacturer of Controlled Substances; Notice of Registration

By Notice dated October 1, 1998, and published in the **Federal Register** on October 9, 1998 (63 FR 54490), Ansys Diagnostics, Inc., 25200 Commercentre Drive, Lake Forest, California 92630, made application by renewal to the Drug Enforcement Administration (DEA) to be registered as a bulk manufacturer of the basic classes of controlled substances listed below:

Drug	Schedule
Phencyclidine (7471)	II
1-Piperidinocyclohexane-carbonitrile (PCC) (8603)	II
Benzoylecgonine (9180)	II

The firm plans to manufacture the listed controlled substances to produce standards and controls for in-vitro diagnostic drug testing systems.

DEA has considered the factors in Title 21, United States Code, section 823(a) and determined that the registration of Ansys Diagnostics, Inc. to manufacture the listed controlled substances is consistent with the public interest at this time. DEA has investigated Ansys Diagnostics, Inc. on a regular basis to ensure that the company's continued registration is consistent with the public interest. These investigations have included inspection and testing of the company's physical security systems, audits of the company's records, verification of the company's compliance with state and local laws, and a review of the company's background and history. Therefore, pursuant to 21 U.S.C. 823 and 28 CFR 0.100 and 0.104, the Deputy Assistant Administrator, Office of Diversion Control, hereby orders that the application submitted by the above firm for registration as a bulk manufacturer of the basis classes of controlled substances listed above is granted.

Dated: March 17, 1999.

John H. King,

Deputy Assistant Administrator, Office of Diversion Control, Drug Enforcement Administration.

[FR Doc. 99–7936 Filed 3–31–99; 8:45 am]

BILLING CODE 4410–09–M

DEPARTMENT OF JUSTICE

Drug Enforcement Administration

[Docket No. 97–19]

Cadiz Thrift-T Drug, Inc., Termination of Registration

On June 3, 1997, the Deputy Assistant Administrator, Office of Diversion Control, Drug Enforcement Administration (DEA) issued an Order to Show Cause to Cadiz Thrift-T Drug, Inc. (Respondent) of Cadiz, Kentucky, notifying it of an opportunity to show cause as to why DEA should not revoke its DEA Certificate of Registration BC5009421 pursuant to 21 U.S.C. 824(a)(1), (2) and (4), and deny any applications for renewal of such registration as a retail pharmacy pursuant to 21 U.S.C. 823(f), for reason that the pharmacy ''falsified an application for registration, an owner-operator of the pharmacy was convicted of a felony related to controlled substances, and your continued registration is inconsistent with the public interest. . . .''

By letter dated June 30, 1997, Respondent filed a request for a hearing, and following prehearing procedures, a hearing was held in Nashville, Tennessee on October 29 and 30, 1997, before Administration Law Judge Gail A. Randall. At the hearing, both parties called witnesses to testify and introduced documentary evidence. After the hearing both parties filed proposed findings of fact, conclusions of law and argument. On July 31, 1998, Judge Randall issued her Opinion and Recommended Ruling, recommending that Respondent's DEA registration be revoked, but that the revocation be stayed for three years.

On August 20, 1998 both parties filed exceptions to the Opinion and Recommended Ruling of the Administrative Law Judge. In addition, on August 20, 1998, Respondent filed a Motion to Dismiss arguing that Respondent has ceased doing business

and surrendered its DEA Certificate of Registration and as a result these proceedings are moot. The Government filed its Response to Motion to Dismiss on August 25, 1998, arguing that the record is closed and any consideration of new evidence ''ought to be rejected.'' The Government also argued that if Respondent's motion is considered it should be denied based upon a prior DEA decision. On September 10, 1998, Jude Randall transmitted the record of these proceedings to the then-Acting Deputy Administrator.

The Deputy Administrator concludes that it is proper to consider Respondent's Motion to Dismiss since it was filed before the record was transmitted to him and because it raises the issue of whether there is even a viable DEA registration capable of revocation in this matter. Accordingly, the Deputy Administrator has considered the record in its entirety, including Respondent's Motion to Dismiss and the Government's response thereto, and pursuant to 21 CFR 1316.67, hereby issues his final order based upon findings of fact and conclusions of law as hereinafter set forth.

Respondent was issued DEA Certificate of Registration BC5009421 on August 23, 1996. On June 30, 1997, DEA issued Respondent an Order to Show Cause proposing to revoke its DEA registration. Specifically, the Order to Show Cause alleged that:

1. On July 27, 1993, [Respondent] renewed its DEA registration, AC1370597, as a retail pharmacy at a registration location of 11 Hospital Street, Cadiz, Kentucky. The registrant held Kentucky Pharmacy permit #P01465. At that time, David C. Smith was the chief pharmacist, as well as a co-owner and corporate president.

2. On August 4, 1994, the DEA Louisville Resident Office conducted an inspection of the records of [Respondent], owned and operated by David C. Smith. The audit revealed that there were shortages and overages of Schedule II, III, and IV controlled substances. Such discrepancies indicate a failure to keep complete and accurate records in violation of 21 CFR 1304–21.

3. On or about September 15, 1994, David C. Smith admitted to an inspector of the Kentucky Board of Pharmacy that the pharmacy had dispensed or refilled prescriptions for patients without physician authorization.

4. On or about November 16, 1994, the Kentucky Board of Pharmacy entered an *Agreed Order* suspending the pharmacist's license of David C. Smith for three months.

5. Pursuant to an *Information* before the United States District Court for the Western District of Kentucky, David C. Smith was charged with two counts of distributing the Schedule IV controlled substances Xanax and propoxyphene on May 20, 1993, in violation of 21 U.S.C. 841(a)(1). On or about July 19, 1996, David C. Smith entered a plea agreement with the United States Attorney, agreeing to plead guilty to both felony counts.

6. Thomas C. Smith submitted, on behalf of [Respondent], an application for a DEA registration as a retail pharmacy dated July 30, 1996. The registered location was designated as 11 Hospital Street, Cadiz, Kentucky. The applicant indicated that it held Kentucky Pharmacy permit #P01465. Thomas C. Smith is a co-owner and corporate officer, and the father of David C. Smith. The DEA subsequently issued registration number BC5009421 to [Respondent].

7. The July 30, 1996, application contained a material falsification by indicating ''no'' to a question which asked, in part, ''has any officer, partner, stockholder or proprietor . . . ever had a State professional license or controlled substance registration revoked, suspended, denied, restricted, or placed on probation.'' The corporation and its officers knew that on or about November 16, 1994, the Kentucky Board of Pharmacy entered an *Agreed Order* suspending the pharmacist's license of David C. Smith, President and chief pharmacist of [Respondent], for three months.

8. [Respondent's] Certificate of Registration, AC1370597, expired on August 31, 1996, and was not renewed.

9. On or about September 2, 1996, [Respondent] submitted information to the Kentucky Pharmacy Board indicating a ''change in ownership.'' As a result, Kentucky Pharmacy permit #P01465 was ''closed'' and a new Kentucky Pharmacy permit #06246 was issued to [Respondent]. The DEA was not notified in accordance with the requirements of 21 CFR § 1307.14.

10. On November 25, 1996, David C. Smith, pursuant to the earlier plea agreement, was sentenced to two years probation by the United States District Court for the Western District of Kentucky.

11. [Respondent] has continued to employ David C. Smith as pharmacist-in-charge in violation of 21 CFR 1301.76(a).

Following a hearing regarding the allegations raised in the Order to Show Cause, Judge Randall issued her Opinion and Recommended Ruling on July 31, 1998, recommending that Respondent's registration be revoked but that the revocation be stayed for three years upon the condition that David Smith not be allowed to work in Respondent pharmacy without a DEA waiver of 21 CFR 1301.76(a).

Subsequently, on August 20, 1998, Respondent filed a Motion to Dismiss with attachments indicating that Respondent was sold on May 24, 1998 and its DEA Certificate of Registration was surrendered to DEA. Respondent argued that these proceedings are moot since Respondent pharmacy is no longer in business and is not using the DEA registration that is the subject of these proceedings. In its response to Respondent's motion, the Government argued that ''the issue regarding Respondent's continued registration is not rendered moot by any unilateral decision of Respondent's officers to discontinue their corporate form of business.'' The Government further argued that ''once an order to show cause has been initiated, there is continued jurisdiction over a registration consistent with DEA precedent.'' In support of its arguments, the Government cited the case of *Park and King Pharmacy,* 52 FR 13,136 (1987), where the then-Administrator revoked the DEA registration even though the pharmacy was sold in the midst of the proceedings.[1] The then-Administrator found that a registration subject to ongoing administrative proceedings cannot be unilaterally terminated pursuant to 21 CFR 1301.62 [2] by the registrant by discontinuing business. Specifically, the then-Administrator noted that ''permitting a registrant to terminate his registration unilaterally, during the eleventh hour of a proceeding to revoke that registration, would permit the registrant to avoid any of the collateral effects of revocation and could require the Administrator to grant the individual another full evidentiary hearing should he decide to re-establish his business or professional practice and apply for a new registration shortly thereafter.''

In addition, the then-Administrator found in *Park and King Pharmacy* that 21 CFR 1301.37(a) [3] ''effectively precludes an applicant's abrupt and unilateral termination of proceedings by requiring the Administrator's permission for withdrawal of an application at any time after issuance of the Order to Show Cause.'' The then-Administrator reasoned that it is the ''application'' and not the applicant that is the subject of the proceedings and found that it is similarly the ''registration,'' and not the registrant who possessed it, that becomes the subject of revocation proceedings. As a result, the then-Administrator concluded that a registration cannot be withdrawn without the Administrator's prior approval.

The Government in its response to Respondent's motion also argued that Respondent did not ''surrender'' its DEA registration but merely tendered it to

[1] In *Park and King Pharmacy,* the pharmacy's DEA registration also expired during the proceedings, however that aspect of the case will not be discussed here since it is not relevant to the issues in this proceeding.

[2] At the time of the decision in *Park and King Pharmacy* the provision regarding the termination of a registration was found in 21 CFR 1301.62. That provision has since been renumbered and can now be found in 21 CFR 1301.52.

[3] This provision has since been renumbered as 21 CFR 1301.16(a).

DEA for retirement, ''and that no action has been taken, nor is any action contemplated . . . for reason that Respondent's registration record currently has an administrative code ''O'' placed on it, which forecloses all administrative action pending the outcome of a show cause proceeding. Accordingly, DEA has not accepted this tender.''

The Deputy Administrator agrees with the Government that the chronology of this case is similar to that of *Park and King Pharmacy*. Respondent was sold after the Order to Show Cause was issued. Therefore, according to the decision in *Park and King Pharmacy*, Respondent's registration should not be considered terminated and should be capable of revocation. However, the Deputy Administrator is troubled by the decision in *Park and King Pharmacy*. The Deputy Administrator can find nothing in the statute or regulations nor any other notice to the public that a registration does not terminate upon the sale of a pharmacy if an Order to Show Cause has been issued. Pursuant to 21 CFR 1301.16, permission is needed to amend or withdraw an application once an Order to Show Cause has been issued, but there is no similar provision regarding a registration. Therefore, no permission is needed to terminate a registration. In fact, 21 CFR 1301.52(a) specifically states that, ''the registration of any person shall terminate if and when such person dies, ceases legal existence, or discontinues business or professional practice.'' (emphasis added)

The Deputy Administrator recognizes the then-Administrator's concerns in *Park and King Pharmacy* that to permit termination after an Order to Show Cause has been issued allows a registrant to avoid the consequences of a revocation. However, pursuant to 21 CFR 1301.52(a) a registration automatically terminates when a pharmacy ceases legal existence or discontinues business or professional practice. The Deputy Administrator can find no authority to support the prevention of a termination, and therefore finds no authority to support the then-Administrator's conclusion in *Park and King Pharmacy* that a registration does not terminate upon the sale of a pharmacy if an Order to Show Cause has been issued.

In fact in *AML Corporation, d/b/a G & O Pharmacy, and G & O Pharmacy*, 61 Fed. Reg. 8973 (1996), decided subsequent to *Park and King Pharmacy*, the then-Deputy Administrator concluded that a pharmacy's registration terminated upon the sale of the pharmacy even though the sale occurred in the midst of administrative proceedings regarding the registration.[4] The then-Deputy Administrator noted ''that pursuant to 21 CFR 1301.62, the transfer of ownership of G & O Pharmacy to AML effectively terminated all authority granted under DEA Certificate of Registration, AG2999691, previously issued to G & O Pharmacy.''

Accordingly, the Deputy Administrator concludes that DEA Certificate of Registration BC5009421, previously issued to Cadiz Thrif/T Drug, Inc. terminated as of May 24, 1998, when it discontinued business upon its sale to Hospital Street Pharmacy, Inc. Therefore there is no viable DEA Certificate of Registration capable of revocation as proposed in the June 3, 1997 Order to Show Cause. This order is effective immediately.

Dated: March 15, 1999.

Donnie R. Marshall,

Deputy Administrator.

[FR Doc. 99–7932 Filed 3–31–99; 8:45 am]

BILLING CODE 4410–09–M

[4] In that case, the Government also sought to revoke the new pharmacy's DEA registration and the proceedings were consolidated.

DEPARTMENT OF JUSTICE

Drug Enforcement Administration

Michael W. Dietz, D.D.S., Revocation of Registration

On September 23, 1998, the Deputy Assistant Administrator, Office of Diversion Control, Drug Enforcement Administration (DEA) issued an Order to Show Cause to Michael W. Dietz, D.D.S. (Respondent) of Cookeville, Tennessee, notifying him of an opportunity to show cause as to why DEA should not revoke his DEA Certificate of Registration AD6561307 pursuant to 21 U.S.C. 824(a) (3) and (4), and deny any pending applications for renewal of such registration pursuant to 21 U.S.C. 823(f). Specifically, the Order to Show Cause alleged that:

''1. [Dr. Dietz'] continued registration is inconsistent with the public interest, as that term is issued in 21 U.S.C. § 823(f) and § 824(a)(4), as evidenced by, but not limited to, the following:

(a) On or about April 19, 1997, [Dr. Dietz] sold cocaine, a Schedule II controlled substance, to another person, and such sale was for no legitimate medical purpose and not in the usual course of [his] professional practice.

(b) On or about April 26, 1997, [Dr. Dietz] again sold cocaine to the same person, and such sale was for no legitimate medical purpose and not in the usual course of [his] professional practice.

(c) On or about May 7, 1997, [Dr. Dietz] and this same person used cocaine, and such use was for no legitimate medical practice and not in the usual course of [his] professional practice.

(d) On or about May 9, 1997, [Dr. Dietz] agreed to sell and attempted to deliver cocaine to this same person, and such sale and attempted deliver were for no legitimate medical purpose and not in the usual course of [his] professional practice.

2. On May 19, 1997, [Dr. Dietz was] indicted in the State of Tennessee, Putnam County, for two felony counts of unlawfully and knowingly selling cocaine, two felony counts of unlawfully and knowingly delivering cocaine, two felony counts of unlawfully and knowingly possessing cocaine with the intent to sell or deliver cocaine, two felony counts of unlawfully and knowingly conspiring to sell cocaine and one felony count of unlawfully and knowingly conspiring to possess cocaine with the intent to sell or deliver such cocaine. These criminal charges were based upon the allegations enumerated above.

3. Based upon the above events, the State of Tennessee, Department of Health, Tennessee Board of Dentistry, revoked [Dr. Dietz'] dental license, effective May 19, 1997. As a result, [Dr. Dietz is] no longer authorized by State law to handle controlled substances in the state in which [he is] registered with DEA. 21 U.S.C. § 824(a)(3).

By letter dated October 15, 1998, Respondent waived his opportunity for a hearing and submitted a written statement regarding his position on the issues raised in the Order to Show Cause. Therefore, the Deputy Administrator finds that Respondent has waived his opportunity for a hearing and hereby enters his final order in this matter based upon the investigative file and Respondent's written statement pursuant to 21 CFR 1301.43 (c) and (e) and 1301.46.

The Deputy Administrator finds that in an Order effective May 27, 1998, the State of Tennessee, Department of Health, Board of Dentistry (Board) revoked indefinitely Respondent's license to practice dentistry.[1] In his letter dated October 15, 1998, Respondent stated that ''as a result of the actions taken by the Tennessee Board of Dentistry, I do not require a DEA Certificate of Registration at this time. I respectfully request a suspension of my Registration until re-licensure occurs. Respondent further stated that he ''fully expect[s] re-instatement of my dental license during the spring [Board] meeting of 1999.''

The Deputy Administrator finds that based upon the record before him, Respondent is not currently licensed to

[1] The Deputy Administrator can find no Board order revoking Respondent's dental license effective May 19, 1997, as alleged in the Order to Show Cause.

practice dentistry in the State of Tennessee and therefore, it is reasonable to infer that he is not currently authorized to handle controlled substances in that state. The DEA does not have the statutory authority under the Controlled Substances Act to issue or maintain a registration if the applicant or registrant is without state authority to handle controlled substances in the state in which he conducts his business. 21 U.S.C. 802(21), 823(f), and 824(a)(3). This prerequisite has been consistently upheld. See Romeo J. Perez, M.D., 62 FR 16193 (1997); Demetris A. Green, M.D., 61 FR 60,728 (1996); Dominick A. Ricci, M.D., 58 FR 51104 (1993).

While Respondent indicates that he expects reinstatement of his Tennessee dental license in the near future, this is merely speculation at this point in time and there is nothing in the record from the Board to indicate that Respondent's license will in fact be reinstated. The Deputy Administrator finds that it is clear that Respondent is not currently authorized to handle controlled substances in the State of Tennessee. As a result, Respondent is not entitled to a DEA registration in that state.

Since Respondent's DEA registration cannot be maintained in Tennessee based upon his lack of state authorization to handle controlled substances, the Deputy Administrator finds that it is unnecessary to determine whether Respondent's continued registration would be inconsistent with the public interest as alleged in the Order to Show Cause.

Accordingly, the Deputy Administrator of the Drug Enforcement Administration, pursuant to the authority vested in him by 21 U.S.C. 823 and 824 CFR 0.100(b) and 0.104, hereby orders that DEA Certificate of Registration AD6561307, previously issued to Michael Wayne Dietz, D.D.S., be, and it hereby is, revoked. The Deputy Administrator further orders that any pending applications for the renewal of such registration be, and they hereby are, denied. This order is effective May 3, 1999.

Dated: March 15, 1999.

Donnie R. Marshall,

Deputy Administrator.

[FR Doc. 99–7931 Filed 3–31–99; 8:45 am]

BILLING CODE 4410–09–M

DEPARTMENT OF JUSTICE

Drug Enforcement Administration

[Docket No. 98–30]

William Franklin Prior, Jr., M.D. Denial of Application

On April 7, 1998, the Deputy Assistant Administrator, Office of Diversion Control, Drug Enforcement Administration (DEA) issued an Order to Show Cause to William Franklin Prior, Jr., M.D. (Respondent) of South Carolina and New Mexico. The Order to Show Cause notified him of an opportunity to show cause as to why DEA should not revoke his DEA Certificate of Registration BP5105890 [1] issued to him in New Mexico and deny any pending applications for renewal of that registration, pursuant to 21 U.S.C. 823(f), 824(a)(1) and (a)(4), for reason that he materially falsified an application for registration and his continued registration would be inconsistent with the public interest. The Order to Show Cause also proposed to deny Respondent's pending application, executed on September 21, 1994, for registration as a practitioner with DEA in South Carolina, Pursuant to 21 U.S.C. 823(f) for reason that Respondent's registration would be inconsistent with the public interest.

By letter dated May 19, 1998, Respondent filed a request for a hearing regarding his New Mexico DEA Certificate of Registration and stating that ''[t]he application for renewal in South Carolina has now been withdrawn. * * *'' The matter was docketed before Administrative Law Judge Mary Ellen Bittner. On May 26, 1998, Judge Bittner issued an Order for Prehearing Statements. In lieu of filing a prehearing statement, on June 16, 1998, the Government filed a Motion to Terminate the Proceedings, Motion for Summary Disposition and Motion to Stay Proceedings. In its filing, the Government contended that pursuant to a criminal plea agreement entered into on April 14, 1998, Respondent agreed to surrender his New Mexico DEA Certificate of Registration and to withdraw any pending applications for registration with DEA. The Government argued that as a result, there is nothing to revoke or deny and therefore these proceedings should be terminated. In addition, the Government contended that Respondent's application for a DEA registration in South Carolina should be denied because he is not authorized to handle controlled substances in that state. In his response to the Government's motions, Respondent requested that his ''credentials be returned,'' and asked Government counsel to help him ''ask the ALJ to allow my placing of credentials with Judge Simons to be temporary.''

On August 14, 1998, Judge Bittner issued her Opinion and Recommended Decision, terminating the proceedings regarding Respondent's New Mexico DEA Certificate of Registration; denying the Motion to Terminate the proceedings regarding Respondent's application for a DEA Certificate of Registration in South Carolina; finding that Respondent lacked authorization to handle controlled substances in the State of South Carolina; granting the Government's Motion for Summary Disposition regarding Respondent's application for a DEA registration in South Carolina; and recommending that Respondent's application be denied. Neither party filed exceptions to her opinion, and on September 14, 1998, Judge Bittner transmitted the record of these proceedings to the Acting Deputy Administrator.

The Deputy Administrator has considered the record in its entirety, and pursuant to 21 CFR 1316.67, hereby issues his final order based upon findings of fact and conclusions of law as hereinafter set forth. The Deputy Administrator adopts, in full, the Opinion and Recommended Decision of the Administrative Law Judge.

The Deputy Administrator finds that pursuant to a plea agreement entered into by Respondent on April 14, 1998, in the United States District Court for the District of South Carolina, Respondent agreed ''to surrender any DEA registration number, especially number BP5105590. * * *'' According to the affidavit of a DEA investigator dated June 12, 1998, Respondent surrendered his DEA Certificte of Registration to the judge who presided over the criminal proceedings against him, and on June 8, 1998, the investigator retrieved Respondent's Certificate of Registration from the judge's office.

Judge Bittner found that in light of the above and the fact that Respondent does not deny that he surrendered his New Mexico DEA registration, ''the issue of whether or not to revoke it is moot.'' Accordingly, Judge Bittner terminated the proceedings with respect to DEA Certificate of Registration BP5105590. The Deputy Administrator agrees with Judge Bittner's conclusion regarding Respondent's DEA Certificate of

[1] While the Order to Show Cause listed BP5105890 as Respondent's DEA registration number in New Mexico, evidence in the record shows that Respondent's New Mexico DEA Certificate of Registration is BP5105590.

Registration issued to him in new Mexico.

The Deputy Administrator further finds that pursuant to the April 14, 1998 plea agreement, Respondent also agreed ''to withdraw any application for a DEA registration number.'' In its motions, the Government asserted that pursuant to 21 CFR 1301.16(a), Respondent needed permission from DEA before he could withdraw his application since the Order to Show Cause had been previously issued on April 7, 1998. Consequently, the Government attached to its motions a copy of a letter from the DEA Deputy Assistant Administrator, Office of Diversion Control which stated that, ''[i]n response to your plea agreement * * * you are hereby granted permission to withdraw your application dated September 21, 1994, for a Drug Enforcement Administration Certificate of Registration.'' As a result, the Government argued that the proceedings regarding Respondent's application for a DEA Certificate of Registration in South Carolina should be terminated in light of Respondent's plea agreement and DEA's granting of permission to withdraw the application.

However, Judge Bittner concluded that the record does not contain any evidence that Respondent in fact withdrew his September 14, 1994 application for registration. Pursuant to the plea agreement Respondent only agreed to withdraw any pending applications for registration. Further, while the letter from the Deputy Assistant Administrator granted Respondent permission to withdraw his application, he indicates that he did so in response to the plea agreement. Judge Bittner noted that in his request for a hearing Respondent stated that ''[t]he application for renewal in South Carolina has now been withdrawn.'' However, Judge Bittner concluded that this is not sufficient evidence to support a finding that Respondent took any action to withdraw his application. As a result, Judge Bittner concluded, and the Deputy Administrator agrees, that Respondent has not withdrawn his September 21, 1994 application and therefore the proceedings regarding this application are not terminated.

With respect to the application for registration in South Carolina, the Government also argued that summary disposition should be granted based on Respondent's lack of authorization to handle controlled substances in South Carolina. The Deputy Administrator finds that by letter dated September 27, 1994, the South Carolina Department of Health and Environmental Control denied Respondent's application for a controlled substance registration. In his response to the Government's motions, Respondent did not deny that he is without authorization to handle controlled substances in South Carolina. Therefore, the Deputy Administrator concludes that Respondent is not currently authorized to handle controlled substances in South Carolina.

The DEA does not have the statutory authority under the Controlled Substances Act to issue or maintain a registration if the applicant or registrant is without state authority to handle controlled substances in the state in which he conducts his business. 21 U.S.C 802(21), 823(f) and 824(a)(3). This prerequisite has been consistently upheld. *See Romeo J. Perez, M.D.,* 62 FR 16193 (1997); *Demetris A. Green, M.D.* 61 FR 60728 (1996); *Dominick A. Ricci, M.D.,* 58 FR 51104 (1993).

Here it is clear that Respondent is not licensed to handle controlled substances in South Carolina. Therefore, he is not entitled to a DEA registration in that state.

In light of the above, Judge Bittner properly granted the Government's Motion for Summary Disposition regarding Respondent's application for registration in South Carolina. Here, there is no dispute that Respondent is without authorization to handle controlled substances in South Carolina. Therefore, it is well-settled that when no question of material fact is involved, a plenary, adversary administrative proceeding involving evidence and cross-examination of witnesses is not obligatory. *See Phillip E. Kirk, M.D.,* 48 FR 32887 (1983), *aff'd sub nom Kirk* v. *Mullen,* 749 F.2d 297 (6th Cir. 1984); *NLRB* v. *International Association of Bridge, Structural and Ornamental Ironworkers, AFL–CIO,* 549 F.2d 634 (9th Cir. 1977); *United States* v. *Consolidated Mines & Smelting Co.,* 44 F.2d (9th Cir. 1971).

Accordingly, the Deputy Administrator of the Drug Enforcement Administration, pursuant to the authority vested in him by 21 U.S.C. 823 and 824 and 28 CFR 0.100(b) and 0.104, hereby orders that the proceedings regarding DEA Certificate of Registration BP5105590, previously issued to William Franklin Prior, Jr., M.D., be, and they hereby are, terminated. The Deputy Administrator further orders that the September 14, 1994 application for registration submitted by William Franklin Prior, Jr., M.D., be, and it hereby is, denied. This order is effective April 1, 1999.

Dated: March 15, 1999.

Donnie R. Marshall,

Deputy Administrator.

[FR Doc. 99–7928 Filed 3–31–99; 8:45 am]

BILLING CODE 4410–09–M

DEPARTMENT OF JUSTICE

Drug Enforcement Administration

Manufacturer of Controlled Substances, Notice of Registration

By Notice dated December 10, 1998, and published in the Federal Register on December 23, 1998 (63 FR 71156), Irix Pharmaceuticals, Inc., 101 Technology Place, Forence, South Carolina 29501, made application to the Drug Enforcement Administration (DEA) to be registered as a bulk manufacturer of methylphenidate (1724), a basic class of controlled substance listed in Schedule II.

The firm plans to manufacture methylphenidate for demonstration purposes and for dosage form development and stability studies.

DEA has considered the factors in Title 21, United States Code, Section 823(a) and determined that the registration of Irix Pharmaceuticals, Inc. to manufacture the listed controlled substance is consistent with the public interest at this time. DEA has investigated Irix Pharmaceuticals, Inc. to ensure that the company's registration is consistent with the public interest. Therefore, pursuant to 21 U.S.C. 823 and 28 CFR. 0.100 and 0.104, the Deputy Assistant Administrator, Office of Diversion Control, hereby orders that the application submitted by the above firm for registration as a bulk manufacturer of the basic class of controlled substance listed above is granted.

Dated: March 17, 1999.

John H. King,

Deputy Assistant Administrator, Office of Diversion Control, Drug Enforcement Administration.

[FR Doc. 99–7937 Filed 3–31–99; 8:45 am]

BILLING CODE 4410–09–M

DEPARTMENT OF JUSTICE

Drug Enforcement Administration

Manufacturer of Controlled Substance; Notice of Application

Pursuant to Section 1301.33(a) of Title 21 of the Code of Federal Regulations (CFR), this is notice that on December 23, 1998, Johnson Matthey, Inc., Custom Pharmaceuticals Department, 2003 Nolte Drive, West Deptford, New Jersey

08066, made application by renewal to the Drug Enforcement Administration (DEA) for registration as a bulk manufacturer of the basic classes of controlled substances listed below:

Drug	Schedule
Difenoxin (9168)	I
Propiram (9649)	I
Amphetamine (1100)	II
Methamphetamine (1105)	II
Methylphenidate (1724)	II
Codeine (9050)	II
Oxycodone (9143)	II
Hydromorphone (9150)	II
Hydrocodone (9193)	II
Meperidine (9230)	II
Methadone (9250)	II
Methadone-intermediate (9254)	II
Morphine (9300)	II
Thebaine (9333)	II
Alfentanil (9737)	II
Sufentanil (9740)	II
Fentanyl (9801)	II

The firm plans to manufacture the listed controlled substances in bulk to supply final dosage form manufacturers.

Any other such applicant and any person who is presently registered with DEA to manufacture such substance may file comments or objections to the issuance of the proposed registration.

Any such comments or objections may be addressed, in quintuplicate, to the Deputy Assistant Administrator, Office of Diversion Control, Drug Enforcement Administration, United States Department of Justice, Washington, D.C. 20537, Attention: DEA Federal Register Representative (CCR), and must be filed no later than June 1, 1999.

Dated: March 18, 1999.

John H. King,

Deputy Assistant Administrator, Office of Diversion Control, Drug Enforcement Administration.

[FR Doc. 99–7934 Filed 3–31–99; 8:45 am]

BILLING CODE 4410–09–M

DEPARTMENT OF JUSTICE

Drug Enforcement Administration

Manufacturer of Controlled Substances; Notice of Registration

By Notice dated December 23, 1998, and published in the **Federal Register** on January 4, 1999, (64 FR 182), Knoll Pharmaceutical Company, 30 North Jefferson Road, Whippany, New Jersey 07981, made application by renewal to the Drug Enforcement Administration (DEA) to be registered as a bulk manufacturer of the basic classes of controlled substances listed below:

Drug	Schedule
Dihydromorphine (9145)	I
Hydromorphone (9150)	II

The firm plans to produce bulk product and finished dosage units for distribution to its customers.

DEA has considered the factors in Title 21, United States Code, Section 823(a) and determined that the registration of Knoll Pharmaceutical Company to manufacture the listed controlled substances is consistent with the public interest at this time. DEA has investigated Knoll Pharmaceutical Company on a regular basis to ensure that the company's continued registration is consistent with the public interest. These investigations have included inspection and testing of the company's physical security systems, audits of the company's records, verification of the company's compliance with state and local laws, and a review of the company's background and history. Therefore, pursuant to 21 U.S.C. 823 and 28 CFR 0.100 and 0.104, the Deputy Assistant Administrator, Office of Diversion Control, hereby orders that the application submitted by the above firm for registration as a bulk manufacturer of the basic classes of controlled substances listed above is granted.

Dated: March 18, 1999.

John H. King,

Deputy Assistant Administrator, Office of Diversion Control, Drug Enforcement Administration.

[FR Doc. 99–7938 Filed 3–31–99; 8:45 am]

BILLING CODE 4410–09–M

DEPARTMENT OF JUSTICE

Drug Enforcement Administration

Manufacturer of Controlled Substances; Notice of Application

Pursuant to Section 1301.33(a) of Title 21 of the Code of Federal Regulations (CFR), this is notice that on January 20, 1999, Lilly Del Caribe, Inc., Chemical Plant, Kilometer 146.7, State Road 2, Mayaguez, Puerto Rico 00680, made application by renewal to the Drug Enforcement Administration (DEA) for registration as a bulk manufacturer of dextropropoxyphene (9273), a basic of controlled substances listed in Schedule II.

The firm plans to manufacture bulk product for distribution to its customers.

Any other such applicant and any person who is presently registered with DEA to manufacture such substance may file comments or objections to the issuance of the proposed registration.

Any such comments or objections may be addressed, in quintuplicate, to the Deputy Assistant Administrator, Office of Diversion Control, Drug Enforcement Administration, United States Department of Justice, Washington, D.C. 20537, Attention: DEA Federal Register Representative (CCR), and must be filed no later than June 7, 1999.

Dated: March 1, 1999.

John H. King,

Deputy Assistant Administrator, Office of Diversion Control, Drug Enforcement Administration.

[FR Doc 99–7933 Filed 3–31–99; 8:45 am]

BILLING CODE 4410–09–M

DEPARTMENT OF JUSTICE

Drug Enforcement Administration

Manufacturer of Controlled Substances; Notice of Registration

By Notice dated December 2, 1998, and published in the **Federal Register** on December 11, 1998, (63 FR 68474), Mallinckrodt Chemical, Inc., Mallinckrodt & Second Streets, St. Louis, Missouri 6314, made application by letter to the Drug Enforcement Administration (DEA) to be registered as a bulk manufacturer of amphetamine (1100), a basic class of controlled substance listed in Schedule II.

The firm plans to bulk manufacture the listed controlled substance for product development.

DEA has considered the factors in Title 21, United States Code, Section 823(a) and determined that the registration of Mallinckrodt Chemical, Inc. to manufacture amphetamine is consistent with the public interest at this time. DEA has investigated Mallinckrodt Chemical, Inc. on a regular basis to ensure that the company's continued registration is consistent with the public interest. These investigations have included inspection and testing of the company's physical security systems, audits of the company's records, verification of the company's compliance with state and local laws, and a review of the company's background and history. Therefore, pursuant to 21 U.S.C. 823 and 28 CFR 0.100 and 0.104, the Deputy Assistant Administrator, Office of Diversion Control, hereby orders that the application submitted by the above firm for registration as a bulk manufacturer of the basic class of controlled substance listed above is granted.

Dated: March 1, 1999.

John H. King,

Deputy Assistant Administrator, Office of Diversion Control, Drug Enforcement Administration.

[FR Doc. 99–7939 Filed 3–31–99; 8:45 am]

BILLING CODE 4410–09–M

DEPARTMENT OF JUSTICE

Drug Enforcement Administration

Manufacturer of Controlled Substances; Notice of Registration

By Notice dated December 14, 1998, and published in the **Federal Register** on December 23, 1998 (63 FR 71159), Noramco of Delaware, Inc., Division of McNeilab, Inc., 500 Old Swedes Landing Road, Wilmington, Delaware 19801, made application by renewal to the Drug Enforcement Administration (DEA) to be registered as a bulk manufacturer of the basic classes of controlled substances listed below:

Drug	Schedule
Codeine (9050)	II
Oxycodone (9143)	II
Hydrocodone (9193)	II
Morphine (9300)	II
Thebaine (9333)	II

The firm plans to manufacture the listed controlled substances for distribution to its customers as bulk product.

DEA has considered the factors in Title 21, United States Code, Section 823 (a) and determined that the registration of Noramco of Delaware, Inc. to manufacture the listed controlled substances is consistent with the public interest at this time. DEA has investigated Noramco of Delaware, Inc. on a regular basis to ensure that the company's continued registration is consistent with the public interest. These investigations have included inspection and testing of the company's physical security systems, audits of the company's records, verification of the company's compliance with state and local laws, and a review of the company's background and history. Therefore, pursuant to 21 U.S.C. 823 and 28 CFR 0.100 and 0.104, the Deputy Assistant Administrator, Office of Diversion Control, hereby orders that the application submitted by the above firm for registration as a bulk manufacturer of the basic classes of controlled substances listed above is granted.

Dated: March 17, 1999.

John H. King,

Deputy Assistant Administrator, Office of Diversion Control, Drug Enforcement Administration.

[FR Doc. 99–7940 Filed 3–31–99; 8:45 am]

BILLING CODE 4410–09–M

DEPARTMENT OF JUSTICE

Drug Enforcement Administration

Manufacturer of Controlled Substances; Notice of Registration

By Notice dated October 1, 1998, and published in the **Federal Register** on October 9, 1998, (63 FR 54492), Nycomed, Inc., 33 Riverside Avenue, Rensselaer, New York 12144, made application by renewal to the Drug Enforcement Administration (DEA) to be registered as a bulk manufacturer of the basic classes of controlled substances listed below:

Drug	Schedule
Methylphenidate (1724)	II
Meperidine (9230)	II

The firm plans to manufacture meperidine as bulk product for distribution to it customers and to perform a chemical isolation process on methylphenidate which has been manufactured by another bulk manufacturer of methylphenidate.

DEA has considered the factors in Title 21, United States Code, section 823(a) and determined that the registration of Nycomed, Inc. to manufacture the listed controlled substances is consistent with the public interest at this time. DEA has investigated Mycomed, Inc. on a regular basis to ensure that the company's continued registration is consistent with the public interest. These investigations have included inspection and testing of the company's physical security systems, audits of the company's records, verification of the company's compliance with state and local laws, and a review of the company's background and history. Therefore, pursuant to 21 U.S.C. 823 and 28 CFR 0.100 and 0.104, the Deputy Assistant Administrator, Office of Diversion Control, hereby orders that the application submitted by the above firm for registration as a bulk manufacturer of the basic classes of controlled substances listed above is granted.

Dated: March 1, 1999.

John H. King,

Deputy Assistant Administrator, Office of Diversion Control, Drug Enforcement Administration.

[FR Doc. 99–7941 Filed 3–31–99; 8:45 am]

BILLING CODE 4410–09–M

DEPARTMENT OF JUSTICE

Drug Enforcement Administration

Prodim Denial of Application

On June 5, 1998, the Deputy Assistant Administrator, Office of Diversion Control, Drug Enforcement Administration (DEA) issued an Order to Show Cause to Prodim (Respondent) proposing to deny its application for registration as an exporter of Schedule II, III and IV controlled substances under 21 U.S.C. 958, for reason that its registration would be inconsistent with the public interest pursuant to 21 U.S.C. 823 (a) and (b).

The Order to Show Cause was ultimately received by Randall Tetzner who signed the application for registration on behalf of Respondent. By letter dated September 4, 1998, Respondent waived its opportunity for a hearing and instead submitted a written statement pursuant to 21 CFR 1301.43(c).

Therefore, the Deputy Administrator concludes that Respondent has waived its opportunity for a hearing and hereby enters his final order in this matter based upon the investigative file and Respondent's written statement pursuant to 21 CFR 1301.43 (c) and (e) and 1301.46.

The Deputy Administrator finds that Randall Tetzner, on behalf of Respondent, submitted an application dated October 7, 1995, for registration with DEA as an exporter of Schedule II, III and IV controlled substances. According to Mr. Tetzner, Respondent wants to be registered in order to send donated or purchased controlled substances to Honduras. In describing Respondent, Mr. Tetzner stated that ''[t]he organization I volunteer with and work with supplies needed medications to rural villages in Honduras. * * * From a base camp in La Paz, a worker brings replacement medications via motorcycle to the villages.''

After numerous discussions and correspondence between DEA and Mr. Tetzner, an Order to Show Cause was issued on June 5, 1998, proposing to deny Respondent's application for registration. Specifically, the Order to Show Cause alleges that Respondent's registration would be inconsistent with

the public interest based upon the following:

a. Mr. Tetzner is the sole representative of Prodim. On the application for DEA registration he provided as an address his trailer home. This location does not have secure controlled substance storage facilities and Prodim does not have an alternative location with which to securely store controlled substances, as required by 21 CFR § 1301.72. Therefore, Mr. Tetzner has not demonstrated that he can maintain effective controls against the diversion of controlled substances as required pursuant to 21 U.S.C. § 823(a)(1).

b. In a letter to DEA dated February 15, 1996, Mr. Tetzner, informed DEA that he had never before exported controlled substances. Therefore, Prodim has no experience in the export of controlled substances. 21 U.S.C. § 958(a) and § 823(a)(5) and (d)(5).

In his written statement dated September 4, 1998, Mr. Tetzner indicated that he never meant to store controlled substances at his home, but instead proposed that Respondent would ''give DEA at least 30 days notice of our intent to send the medications, we purchase or recieve [sic] the medications at a hospital or drug company, then while on site we do the required paperwork and on site we ship the medications pursuant [sic] to DEA directives. * * * The medications would only go from an already registered facility, be transferred via paperwork, then the donating agency would then confirm the transfer and they would ship the drugs. In no manner shall PRODIM ever possess these drugs other than to count and verify on site.'' Further, Mr. Tetzner indicated that he has been a paramedic for a number of years and as such understands the importance of documenting the use of controlled substances.

Pursuant to 21 U.S.C. 958 and 823, the Deputy Administrator may deny an application for registration as an exporter of controlled substances if he finds that such registration would be inconsistent with the public interest. In determining the public interest, the Deputy Administrator shall consider the factors set forth in 21 U.S.C. 823(a) for registration to export Schedule II controlled substances and the factors set forth in 21 U.S.C. 823(d) for registration to export Schedule III and IV controlled substances. The factors in these two sections are essentially the same. Pursuant to 21 U.S.C. 823(d), the Deputy Administrator shall consider:

(1) Maintenance of effective controls against diversion of particular controlled substances and any controlled substances in Schedule III, IV, or V compounded therefrom into other than legitimate medical, scientific, or industrial channels;
(2) Compliance with applicable State and local law;
(3) Promotion of technical advances in the art of manufacturing these substances and the development of new substances;
(4) Prior conviction record of applicant under Federal or State laws relating to the manufacture, distribution, or dispensing of such substances;
(5) Past experience in the manufacture, distribution, and dispensing of controlled substances, and the existence in the establishment of effective controls against diversion; and
(6) Such other factors as may be relevant to and consistent with the public health and safety.

The Deputy Administrator finds that there is no evidence in the record regarding factors two, three or four. Regarding factor one, there is very little specific evidence in the record as to the controls Respondent will maintain against the diversion of controlled substances. In its written statement, Respondent maintains that it will not take possession of the controlled substances; that the substances would be sent from a location already registered with DEA, that the donating agency would confirm the transfer and ship the rugs, and that Respondent will only count and verify the drugs on site.

Pursuant to 21 CFR 1301.43(c), a written statement ''shall be made a part of the record and shall be considered in light of the lack of opportunity for cross-examination in determining the weight to be attached to matters of fact asserted therein.'' The Deputy Administrator finds that the assertions in Respondent's written statement warrant little weight. The Deputy Administrator is unable to determine from Respondent's written statement who would be responsible for the controlled substances since the controlled substances would be stored at the donating agency and the donating agency would confirm the transfer and ship the drugs. Further, the Deputy Administrator is unable to determine what controls against diversion would be in place during the shipment of any controlled substances. Of even greater concern is that the Deputy Administrator is unable to determine from Respondent's written statement the identity or location of the donating agency or agencies, and is therefore unable to determine whether effective controls are maintained to prevent the diversion of exported controlled substances.

Regarding factor five while Mr. Tetzner indicates that he has handled controlled substances as a paramedic and a Navy corpsman, there is no evidence that he has any experience in exporting controlled substances, nor in the responsibilities of a DEA registrant in preventing the diversion of controlled substances.

As to factor six, the record indicates that Respondent and Mr. Tetzner do not have sufficient knowledge and understanding of the export requirements set forth in 21 U.S.C. 953 and 21 CFR 1312.21. In Respondent's written statement, Mr. Tetzner states that it will ''give the DEA at least 30 days notice of our intent to send the medications. * * *'' Respondent does not discuss whether its proposed exportations would meet the requirements of 21 U.S.C. 953, nor does it indicate that it will follow the procedures set forth in 21 CFR 1312.21 regarding obtaining the authorization to export specific shipments. Particularly troubling to the Deputy Administrator is that the record indicates that Mr. Tetzer was advised by DEA on several occasions of these requirements and was told where he could obtain a copy of the regulations, yet he did not do so.

The Deputy Administrator concludes that based upon the record currently before him Respondent's registration as an exporter of controlled substances would be inconsistent with the public interest. There is no evidence that Respondent would maintain effective controls against the diversion of controlled substances; that Respondent possesses relevant experience in the handling of controlled substances; and that Respondent understands the export requirements set forth in 21 U.S.C. 953 and 21 CFR 1312.21.

Accordingly, the Deputy Administrator of the Drug Enforcement Administration pursuant to the authority vested in him by 21 U.S.C. 823 and 958 and 28 CFR 0.100(b) and 0.104, hereby orders that the application for registration submitted by Prodim, be, and it hereby is, denied. This order is effective May 3, 1999.

Dated: March 15, 1999.

Donnie R. Marshall,

Deputy Administrator.

[FR Doc. 99–7929 Filed 3–31–99; 8:45 am]

BILLING CODE 4410–09–M

DEPARTMENT OF JUSTICE

Drug Enforcement Administration

Importation of Controlled Substances; Notice of Application

Pursuant to section 1008 of the Controlled Substances Import and

Export Act (21 U.S.C. 958(I)), the Attorney General shall, prior to issuing a registration under this Section to a bulk manufacturer of a controlled substance in Schedule I or II and prior to issuing a regulation under section 1002(a) authorizing the importation of such a substance, provide manufacturers holding registrations for the bulk manufacture of the substance an opportunity for a hearing.

Therefore, in accordance with section 1301.34 of Title 21, Code of Federal Regulations (CFR), notice is hereby given that on January 26, 1999, Roxane Laboratories, Inc., 1809 Wilson Road, P.O. Box 16532, Columbus, Ohio 43216–6532, made application by renewal to the Drug Enforcement Administration to be registered as an importer of cocaine (9041), a basic class of controlled substance listed in Schedule II.

The firm plans to import cocaine to make products for distribution to the firm's customers.

Any manufacturer holding, or applying for, registration as a bulk manufacturer of this basic class of controlled substance may file written comments on or objections to the application described above and may, at the same time, file a written request for a hearing on such application in accordance with 21 CFR 1301.43 in such form as prescribed by 21 CFR 1316.47.

Any such comments, objections or requests for a hearing may be addressed, in quintuplicate, to the Deputy Assistant Administrator, Office of Diversion Control, Drug Enforcement Administration, United States Department of Justice, Washington, D.C. 20537, Attention: DEA Federal Register Representative (CCR), and must be filed no later than (30 days from publication)

This procedure is to be conducted simultaneously with and independent of the procedures described in 21 CFR 1301.34(b), (c), (d), (e), and (f). As noted in a previous notice at 40 FR 43745–46 (September 23, 1975), all applicants for registration to import a basic class of any controlled substance in Schedule I or II are and will continue to be required to demonstrate to the Deputy Assistant Administrator, Office of Diversion Control, Drug Enforcement Administration that the requirements for such registration pursuant to 21 U.S.C. 958(a), 21 CFR 1301.34(a), (b), (c), (d), (e), and (f) are satisfied.

Dated: March 3, 1999.

John H. King,

Deputy Assistant Administrator, Office of Diversion Control, Drug Enforcement Administration.

[FR Doc. 99–7935 Filed 3–31–99; 8:45 am]

BILLING CODE 4410–09–M

DEPARTMENT OF JUSTICE

Drug Enforcement Administration

Importation of Controlled Substances; Notice of Application

Pursuant to section 1008 of the Controlled Substances Import and Export Act (21 U.S.C. 958(i)), the Attorney General shall, prior to issuing a registration under this Section to a bulk manufacturer of a controlled substance in Schedule I or II and prior to issuing a regulation under Section 1002(a) authorizing the importation of such a substance, provide manufacturers holding registrations for the bulk manufacture of the substance an opportunity for a hearing.

Therefore, in accordance with section 1301.34 of Title 21, Code of Federal Regulations (CFR), notice is hereby given that on November 30, 1998, Taro Pharmaceuticals U.S.A., Inc., 5 Skyline Drive, Hawthorne, New York 10532, made application to the Drug Enforcement Administration to be registered as a importer of the basic classes of controlled substances listed below:

Drug	Schedule
Pentobarbital (2270)	II
Codeine (9050)	II
Oxycodone (9143)	II
Hydrocodone (9193)	II

The firm plans to import finished product sample for evaluation and conducting clinical/Bio-equivalence testing.

Any manufacturer holding, or applying for, registration as a bulk manufacturer of these basic classes of controlled substances may file written comments on or objections to the application described above and may, at the same time, file a written request for a hearing on such application in accordance with 21 CFR 1301.43 in such form as prescribed by 21 CFR 1316.47.

Any such comments, objections or requests for a hearing may be addressed, in quintuplicate, to the Deputy Assistant Administrator, Office of Diversion Control, Drug Enforcement Administration, United States Department of Justice, Washington, D.C. 20537, Attention: DEA Federal Register Representative (CCF), and must be filed no later than May 3, 1999.

This procedure is to be conducted simultaneously with and independent of the procedures described in 21 CFR 1301.34(b), (c), (d), (e), and (f). As noted in a previous notice at 40 FR 43745–46 (September 23, 1975), all applicants for registration to import a basic class of any controlled substance in Schedule I or II are and will continue to be required to demonstrate to the Deputy Assistant Administrator, Office of Diversion Control, Drug Enforcement Administration that the requirements for such registration pursuant to 21 U.S.C. 958(a) 21 U.S.C. 823(a), and 21 CFR 1301.34(a), (b), (c), (d), (e), and (f) are satisfied.

Dated: January 27, 1999.

John H. King,

Deputy Assistant Administrator, Office of Diversion Control, Drug Enforcement Administration.

[FR Doc. 99–8055 Filed 3–31–99; 8:45 am]

BILLING CODE 4410–09–M

DEPARTMENT OF JUSTICE

Drug Enforcement Administration

[Docket No. 98–25]

George Thomas, PA–C Denial of Application

On March 19, 1998, the Deputy Assistant Administrator, Office of Diversion Control, Drug Enforcement Administration (DEA) issued an Order to Show Cause to George Thomas, PA–C (Respondent) of Richland, Washington. The Order to Show Cause notified him of an opportunity to show cause as to why DEA should not deny his application for registration as a mid-level practitioner pursuant to 21 U.S.C. 823(f) and 824(a)(3), for reason that his registration would be inconsistent with the public interest and that he is not currently authorized to handle controlled substances in the State of Washington.

By letter dated April 13, 1998, Respondent filed a request for a hearing and the matter was docketed before Administrative Law Judge Gail A. Randall. On April 20, 1998, Judge Randall issued an Order for Prehearing Statements. In lieu of filing a prehearing statement, the Government filed a Motion for Summary Disposition on May 5, 1998, alleging that Respondent was not authorized to handle controlled substances in the State of Washington and therefore DEA cannot issue him a registration in that state. Respondent

did not reply to the Government's motion.

On May 27, 1998, Judge Randall issued an Order denying the Government's motion. In doing so, Judge Randall agreed with the Government that DEA lacks authority to register a practitioner who is not authorized to handle controlled substances in the state in which he practices. However, Judge Randall found that the Government had not met its burden of proof for summary disposition since the Government failed to file a copy of Respondent's application or any other evidence indicating that Respondent had applied to be registered by DEA in the State of Washington. Thereafter, on June 9, 1998, the Government filed a Motion for Reconsideration of Summary Disposition Motion, arguing that it had met its burden of proof, but nonetheless attaching a copy of Respondent's application which reflected an address in Richland, Washington.

Respondent filed a response to the Government's motion on June 26, 1998. In his response, Respondent made three requests: (1) to withdraw the DEA application dated January 16, 1997; (2) that future applications be processed in an expedient and timely manner; and (3) that a future application will be handled favorably, as long as the Respondent holds the appropriate state license. On July 13, 1998, the Government contended that pursuant to 21 CFR 1301.16(a) and 28 CFR 0.100 and 0.104, Judge Randall lacked jurisdiction to grant Respondent's request to withdraw his pending application. In a footnote, the Government indicated that Respondent's request to withdraw his application had been forwarded to the DEA Deputy Assistnt Administrator, Office of Diversion Control.

On July 23, 1998, Judge Randall issued her Opinion and Recommended Ruling, concluding that she lacked jurisdiction to grant Respondent's request to withdraw his application; finding that Respondent lacked authorization to handle controlled substances in the State of Washington; granting the Government's Motion for Summary Disposition; and recommending that Respondent's application for registration be denied. Neither party filed exceptions to her opinion, and on September 1, 1998, Judge Randall transmitted the record of these proceedings to the Acting Deputy Administrator.

In a letter dated January 5, 1999 to DEA's Chief Counsel, the Deputy Administrator sought clarification regarding the status of Respondents application in light of Government counsel's representation that Respondent's request to withdraw his application had been forwarded to the DEA Deputy Assistant Administrator, Office of Diversion Control for a decision. The Deputy Administrator reasoned that if Respondent's request to withdraw his application had been granted then there is no application to deny and these proceedings are moot. By letter dated February 22, 1999, DEA's Chief Counsel indicated that Respondent's request to withdraw his application was denied and attached a copy of the August 12, 1998 letter from DEA's Deputy Assistant Administrator, Office of Diversion Control denying Respondent's request.

The Deputy Administrator has considered the record in its entirety, and pursuant to 21 CFR 1316.67, hereby issues his final order based upon findings of fact and conclusions of law as hereinafter set forth. The Deputy Administrator, adopts in full, the Opinion and Recommended Ruling of the Administrative Law Judge.

The Deputy Administrator finds that effective on or about October 5, 1997, Respondent entered into an Agreed Order with the State of Washington, Department of Health, Medical Quality Assurance Commission. As part of the Agreed Order, Respondent agreed that he shall not order, prescribe or dispense controlled substances. Based upon the evidence in the record this Agreed Order is still in effect and Respondent does not dispute that he is without authority to handle controlled substances in the State of Washington.

The DEA does not have statutory authority under the Controlled Substances Act to issue or maintain a registration if the applicant or registrant is without state authority to handle controlled substances in the state in which he conducts his business. 21 U.S.C. 802(21), 823(f) and 824(a)(3). This prerequisite has been consistently upheld. See Romeo J. Perez, M.D., 62 FR 16193 (1997); Demetris A. Green M.D., 61 FR 60728 (1996); Dominick A. Ricci, M.D., 58 FR 51104 (1993).

Here it is clear tht Respondent is not authorized to handle controlled substances in Washington. Therefore, he is not entitled to a DEA registration in that state.

The Deputy Administrator further finds that in light of the above, Judge Randall properly granted the Government's Motion for Summary Disposition. It is well settled that when no question of material fact is involved, or when the facts are agreed upon, there is no need for a plenary, administrative hearing. Congress did not intend for administrative agencies to perform meaningless tasks. See Gilbert Ross, M.D., 61 FR 8664 (1996); Philip E. Kirk, M.D., 48 FR 32887 (1983), aff'd sub nom *Kirk* v. *Mullen*, 749 F. 2d 297 (6th Cir. 1984). Here, there is no dispute that Respondent currently lacks state authority to handle controlled substances in Washington, where he has requested to be registered with DEA.

Accordingly, the Deputy Administrator of the Drug Enforcement Administration, pursuant to the authority vested in him by 21 U.S.C. 823 and 824 and 28 CFR 0.100(b) and 0.104, hereby orders that the application for a DEA Certificate of Registration submitted by George Thomas, PA–C, be, and it hereby is, denied. This order is effective May 3, 1999.

Dated: March 15, 1999.

Donnie R. Marshall,

Deputy Administrator.

[FR Doc. 99–7930 Filed 3–31–99; 8:45 am]

BILLING CODE 4410–09–M

DEPARTMENT OF JUSTICE

Immigration and Naturalization Service

Agency Information Collection Activities: Proposed Collection; Comment Request

ACTION: Notice of Information Collection under Review: Application for Certificate of Citizenship in Behalf of an Adopted Child.

The Department of Justice, Immigration and Naturalization Service (INS) has submitted the following information collection request to the Office of Management and Budget (OMB) for review and clearance in accordance with the Paperwork Reduction Act of 1995. The information collection was previously published in the **Federal Register** on January 14, 1999 at 64 FR 2517, allowing for a 60-day public comment period. No comments were received by the INS on this proposed information collection.

The purpose of this notice is to allow an additional 30 days for public comments. Comments are encouraged and will be accepted until May 3, 1999. This process is conducted in accordance with 5 CFR 1320.10.

Written comments and/or suggestions regarding the items contained in this notice, especially regarding the estimated public burden and associated response time, should be directed to the Office of Management and Budget, Office of Information and Regulatory Affairs, Attention: Stuart Shapiro, Department of Justice Desk Officer,

Room 10235, Washington, DC 20530; 202–395–7316.

Written comments and suggestions from the public and affected agencies concerning the proposed collection of information should address one or more of the following four points:

(1) Evaluate whether the proposed collection of information is necessary for the proper performance of the functions of the agency, including whether the information will have practical utility;

(2) Evaluate the accuracy of the agency's estimate of the burden of the proposed collection of information, including the validity of the methodology and assumptions used;

(3) Enhance the quality, utility, and clarity of the information to be collected; and

(4) Minimize the burden of the collection of information on those who are to respond, including through the use of appropriate automated, electronic, mechanical, or other technological collection techniques or other forms of information technology, e.g., permitting electronic submission of responses.

Overview of this information collection:

(1) *Type of Information Collection:* Extension of currently approved collection.

(2) *Title of the Form/Collection:* Application for Certificate of Citizenship in Behalf of an Adopted Child.

(3) *Agency form number, if any, and the applicable component of the Department of Justice sponsoring the collection:* Form N–643, Adjudications Division, Immigration and Naturalization Service.

(4) *Affected public who will be asked or required to respond, as well as a brief abstract:* Primary: Individuals or Households. This information collection allows United States citizen parents to apply for a certificate of citizenship on behalf of their adopted alien children.

(5) *An estimate of the total number of respondents and the amount of time estimated for an average respondent to respond:* 11,159 responses at 1 hour per response.

(6) *An estimate of the total public burden (in hours) associated with the collection:* 11,159 annual burden hours.

If you have additional comments, suggestions, or need a copy of the proposed information collection instrument with instructions, or additional information, please contact Richard A. Sloan 202–514–3291, Director, Policy Directives and Instructions Branch, Immigration and Naturalization Service, U.S. Department of Justice, Room 5307, 425 I Street, NW., Washington, DC 20536.

Additionally, comments and/or suggestions regarding the item(s) contained in this notice, especially regarding the estimated public burden and associated response time may also be directed to Mr. Richard A. Sloan.

If additional information is required contact: Mr. Robert B. Briggs, Clearance Officer, United States Department of Justice, Information Management and Security Staff, Justice Management Division, Suite 850, Washington, Center, 1001 G Street, NW, Washington, DC 20530.

March 26, 1999.

Richard A. Sloan,

Department Clearance Officer, United States Department of Justice Immigration and Naturalization Service.

[FR Doc. 99–7959 Filed 3–31–99; 8:45 am]

BILLING CODE 4410–10–M

DEPARTMENT OF JUSTICE

Immigration and Naturalization Service

Agency Information Collection Activities: Proposed Collection; Comment Request

ACTION: Notice of Information Collection Under Review: Notice to Student or Exchange Visitor.

The Department of Justice, Immigration and Naturalization Service (INS) has submitted the following information collection request to the Office of Management and Budget (OMB) for review and clearance in accordance with the Paperwork Reduction Act of 1995. The information collection was previously published in the **Federal Register** on January 11, 1999 at 64 FR 1643, allowing for a 60-day public comment period. No comments were received by the INS on this proposed information collection.

The purpose of this notice is to allow an additional 30 days for public comments. Comments are encouraged and will be accepted until May 3, 1999. This process is conducted in accordance with 5 CFR 1320.10.

Written comments and/or suggestions regarding the items contained in this notice, especially regarding the estimated public burden and associated response time, should be directed to the Office of Management and Budget, Office of Information and Regulatory Affairs, Attention: Stuart Shapiro, Department of Justice Desk Officer, Room 10235, Washington, DC 20530; 202–395–7316.

Written comments and suggestions from the public and affected agencies concerning the proposed collection of information should address one or more of the following four points:

(1) Evaluate whether the proposed collection of information is necessary for the proper performance of the functions of the agency, including whether the information will have practical utility;

(2) Evaluate the accuracy of the agency's estimate of the burden of the proposed collection of information, including the validity of the methodology and assumptions used;

(3) Enhance the quality, utility, and clarity of the information to be collected; and

(4) Minimize the burden of the collection of information on those who are to respond, including through the use of appropriate automated, electronic, mechanical, or other technological collection techniques or other forms of information technology, e.g., permitting electronic submission of responses.

Overview of this information collection:

(1) Type of Information Collection: Reinstatement without change of a previously approved collection.

(2) Title of the Form/Collection: Notice to Student or Exchange Visitor.

(3) Agency form number, if any, and the applicable component of the Department of Justice sponsoring the collection: Form I–515, Adjudications Division, Immigration and Naturalization Service.

(4) Affected public who will be asked or required to respond, as well as a brief abstract: Primary: Individuals or Households. This information collection will be used to notify students or exchange visitors admitted to the United States as nonimmigrants that they have been admitted without required forms and that they have 30 days to present the required forms and themselves to the appropriate office for correct processing.

(5) An estimate of the total number of respondents and the amount of time estimated for an average respondent to respond: 3,000 responses at 5 minutes (.083 hours) per response.

(6) An estimate of the total public burden (in hours) associated with the collection: 249 annual burden hours.

If you have additional comments, suggestions, or need a copy of the proposed information collection instrument with instructions, or additional information, please contact Richard A. Sloan 202–514–3291, Director, Policy Directives and Instructions Branch, Immigration and Naturalization Service, U.S. Department

of Justice, Room 5307, 425 I Street, NW, Washington, DC 20536.

Additionally, comments and/or suggestions regarding the item(s) contained in this notice, especially regarding the estimated public burden and associated response time may also be directed to Mr. Richard A. Sloan.

If additional information is required contact: Mr. Robert B. Briggs, Clearance Officer, United States Department of Justice, Information Management and Security Staff, Justice Management Division, Suite 850, Washington Center, 1001 G Street, NW, Washington, DC 20530.

Dated: March 26, 1999.

Richard A. Sloan,

Department Clearance Officer, United States Department of Justice, Immigration and Naturalization Service.

[FR Doc. 99–7960 Filed 3–31–99; 8:45 am]

BILLING CODE 4410–10–M

DEPARTMENT OF JUSTICE

Immigration and Naturalization Service

Agency Information Collection Activities: Proposed Collection; Comment Request

ACTION: Notice of Information Collection under Review: Application to Payoff or Discharge Alien Crewman.

The Department of Justice, Immigration and Naturalization Service (INS) has submitted the following information collection request to the Office of Management and Budget (OMB) for review and clearance in accordance with the Paperwork Reduction Act of 1995. The information collection was previously published in the **Federal Register** on January 11, 1999 at 64 FR 1642, allowing for a 60-day public comment period. No comments were received by the INS on this proposed information collection.

The purpose of this notice is to allow an additional 30 days for public comments. Comments are encouraged and will be accepted until May 3, 1999. This process is conducted in accordance with 5 CFR 1320.10.

Written comments and/or suggestions regarding the items contained in this notice, especially regarding the estimated public burden and associated response time, should be directed to the Office of Management and Budget, Office of Information and Regulatory Affairs, Attention: Stuart Shapiro, Department of Justice Desk Officer, Room 10235, Washington, DC 20530; 202–395–7316.

Written comments and suggestions from the public and affected agencies concerning the proposed collection of information should address one or more of the following four points:

(1) Evaluate whether the proposed collection of information is necessary for the proper performance of the functions of the agency, including whether the information will have practical utility;

(2) Evaluate the accuracy of the agency's estimate of the burden of the proposed collection of information, including the validity of the methodology and assumptions used;

(3) Enhance the quality, utility, and clarity of the information to be collected; and

(4) Minimize the burden of the collection of information on those who are to respond, including through the use of appropriate automated, electronic, mechanical, or other technological collection techniques or other forms of information technology, e.g., permitting electronic submission of responses.

Overview of this information collection:

(1) Type of Information Collection: Reinstatement without change of a previously approved collection.

(2) Title of the Form/Collection: Application to Payoff or Discharge Alien Crewman.

(3) Agency form number, if any, and the applicable component of the Department of Justice sponsoring the collection: Form I–408, Inspections Division, Immigration and Naturalization Service.

(4) Affected public who will be asked or required to respond, as well as a brief abstract: Primary: Individuals or Households. This information collection is required by section 256 of the Immigration and Nationality Act for use in obtaining permission from the Attorney General by master or commanding officer for any vessel or aircraft, to pay off or discharge any alien crewman in the United States.

(5) An estimate of the total number of respondents and the amount of time estimated for an average respondent to respond: 85,000 responses at 25 minutes (.416 hours) per response.

(6) An estimate of the total public burden (in hours) associated with the collection: 35,360 annual burden hours.

If you have additional comments, suggestions, or need a copy of the proposed information collection instrument with instructions, or additional information, please contact Richard A. Sloan 202–514–3291, Director, Policy Directives and Instructions Branch, Immigration and Naturalization Service, U.S. Department of Justice, Room 5307, 425 I Street, NW., Washington, DC 20536. Additionally, comments and/or suggestions regarding the item(s) contained in this notice, especially regarding the estimated public burden and associated response time may also be directed to Mr. Richard A. Sloan.

If additional information is required contact: Mr. Robert B. Briggs, Clearance Officer, United States Department of Justice, Information Management and Security Staff, Justice Management Division, Suite 850, Washington, Center, 1001 G Street, N.W., Washington, DC 20530.

Dated: March 26, 1999.

Richard A. Sloan,

Department Clearance Officer, United States Department of Justice, Immigration and Naturalization Service.

[FR Doc. 99–7961 Filed 3:31–99; 8:45 am]

BILLING CODE 4410–10–M

DEPARTMENT OF JUSTICE

Immigration and Naturalization Service

Agency Information Collection Activities: Proposed Collection; Comment Request

ACTION: Notice of Information Collection under Review: Supplementary Statement for Graduate Medical Trainees.

The Department of Justice, Immigration and Naturalization Service (INS) has submitted the following information collection request to the Office of Management and Budget (OMB) for review and clearance in accordance with the Paperwork Reduction Act of 1995. The information collection was previously published in the **Federal Register** on January 11, 1999 at 64 FR 1643, allowing for a 60-day public comment period. No comments were received by the INS on this proposed information collection.

The purpose of this notice is to allow an additional 30 days for public comments. Comments are encouraged and will be accepted until May 3, 1999. This process is conducted in accordance with 5 CFR 13120.10.

Written comments and/or suggestions regarding the items contained in this notice, especially regarding the estimated public burden and associated response time, should be directed to the Office of Management and Budget, Office of Information and Regulatory Affairs, Attention: Stuart Shapiro, Department of Justice Desk Officer, Room 10235, Washington, DC 20530; 202–395–7316.

Written comments and suggestions from the public and affected agencies

concerning the proposed collection of information should address one or more of the following four points:

(1) Evaluate whether the proposed collection of information is necessary for the proper performance of the functions of the agency, including whether the information will have practical utility;

(2) Evaluate the accuracy of the agency's estimate of the burden of the proposed collection of information, including the validity of the methodology and assumptions used;

(3) Enhance the quality, utility, and clarity of the information to be collected; and

(4) Minimize the burden of the collection of information on those who are to respond, including through the use of appropriate automated, electronic, mechanical, or other technological collection techniques or other forms of information technology, e.g., permitting electronic submission of responses.

Overview of this information collection:

(1) Type of Information Collection: Reinstatement without change of a previously approved collection.

(2) Title of the Form/Collection: Supplementary Statement for Graduate Medical Trainees.

(3) Agency form number, if any, and the applicable component of the Department of Justice sponsoring the collection: Form I–644, Adjudications Division, Immigration and Naturalization Service.

(4) Affected public who will be asked or required to respond, as well as brief abstract: Primary: Individuals or Households. This information collection will be used by foreign exchange visitors who are seeking an extension of stay in order to complete a program of graduate education and training.

(5) An estimate of the total number of respondents and the amount of time estimated for an average respondent to respond: 3,000 responses at 5 minutes (.083 hours) per response.

(6) An estimate of the total public burden (in hours) associated with the collection: 249 annual burden hours.

If you have additional comments, suggestions, or need a copy of the proposed information collection instruments with instructions, or additional information, please contact Richard A. Sloan 202–514–3291, Director, Policy Directives and Instructions Branch, Immigration and Naturalization Service, U.S. Department of Justice, Room 5307, 425 I Street, NW., Washington, DC 20536. Additionally, comments and/or suggestions regarding the item(s) contained in this notice, especially regarding the estimated public burden and associated response time may also be directed to Mr. Richard A. Sloan.

If additional information is required contact: Mr. Robert B. Briggs, Clearance Officer, United States Department of Justice, Information Management and Security Staff, Justice Management Division, Suite 850, Washington Center, 1001 G Street, NW., Washington, DC 20530.

Dated: March 26, 1999.

Richard A. Sloan,

Department Clearance Officer, United States Department of Justice, Immigration and Naturalization Service.

[FR Doc. 99–7962 Filed 3–31–99; 8:45 am]

BILLING CODE 4410–10–M

DEPARTMENT OF JUSTICE

Immigration and Naturalization Service

Agency Information Collection Activities: Proposed Collection; Comment Request

ACTION: Notice of Information Collection Under Review: Application for Transfer of Petition for Naturalization.

The Department of Justice, Immigration and Naturalization Service (INS) has submitted the following information collection request to the Office of Management and Budget (OMB) for review and clearance in accordance with the Paperwork Reduction Act of 1995. The information collection was previously published in the **Federal Register** on January 11, 1999 at 64 FR 1641, allowing for a 60-day public comment period. No comments were received by the INS on this proposed information collection.

The purpose of this notice is to allow an additional 30 days for public comments. Comments are encouraged and will be accepted until May 3, 1999. This process is conducted in accordance with 5 CFR 1320.10.

Written comments and/or suggestions regarding the items contained in this notice, especially regarding the estimated public burden and associated response time, should be directed to the Office of Management and Budget, Office of Information and Regulatory Affairs, Attention: Stuart Shapiro, Department of Justice Desk Officer, room 10235, Washington, DC 20530; (202) 395–7316.

Written comments and suggestions from the public and affected agencies concerning the proposed collection of information should address one or more of the following four points:

(1) Evaluate whether the proposed collection of information is necessary for the proper performance of the functions of the agency, including whether the information will have practical utility;

(2) Evaluate the accuracy of the agency's estimate of the burden of the proposed collection of information, including the validity of the methodology and assumptions used;

(3) Enhance the quality, utility, and clarity of the information to be collected; and

(4) Minimize the burden of the collection of information on those who are to respond, including through the use of appropriate automated, electronic, mechanical, or other technological collection techniques or other forms of information technology, e.g., permitting electronic submission of response.

Overview of this information collection:

(1) Type of Information Collection: Reinstatement without change of a previously approved collection.

(2) Title of the Form/Collection: Application for Transfer of Petition for Naturalization.

(3) Agency form number, if any, and the applicable component of the Department of Justice sponsoring the collection: Form N–455, Adjudications Division, Immigration and Naturalization Service.

(4) Affected public who will be asked or required to respond, as well as a brief abstract: Primary Individuals or Households. The form will be used by the applicant to request transfer of his or her petition to another court in accordance with section 405 of the Immigration and Nationality Act. The Service will also use this information to make recommendations to the court.

(5) An estimate of the total number of respondents and the amount of time estimated for an average respondent to respond: 100 responses at 10 minutes (.166 hours) per response.

(6) An estimate of the total public burden (in hours) associated with the collection: 17 annual burden hours.

If you have additional comments, suggestions, or need a copy of the proposed information collection instrument with instructions, or additional information, please contact Richard A. Sloan, (202) 514–3291, Director, Policy Directives and Instructions Branch, Immigration and Naturalization Service, U.S. Department of Justice, Room 5307, 425 I Street, NW., Washington, DC 20536. Additionally, comments and/or suggestions regarding the item(s) contained in this notice, especially regarding the estimated

public burden and associated response time may also be directed to Mr. Richard A. Sloan.

If additional information is required contact: Mr. Robert B. Briggs, Clearance Officer, United States Department of Justice, Information Management and Security Staff, Justice Management Division, Suite 850, Washington Center, 1001 G Street, NW., Washington, DC 20530.

Dated: March 26, 1999.

Richard A. Sloan,

Department Clearance Officer, United States Department of Justice, Immigration and Naturalization Service.

[FR Doc. 99–7963 Filed 3–31–99; 8:45 am]

BILLING CODE 4410–10–M

DEPARTMENT OF JUSTICE

Immigration and Naturalization Service

Agency Information Collection Activities: Comment Request

ACTION: Notice of Information Collection Under Review; Health and Human Services Statistical Data for Refugee/Asylee Adjusting Status.

The Department of Justice, Immigration and Naturalization Service has submitted the following information collection request for review and clearance in accordance with the Paperwork Reduction Act of 1995. The proposed information collection is published to obtain comments from the public and affected agencies. Comments are encouraged and will be accepted for ''sixty days'' until June 1, 1999.

Written comments and suggestions from the public and affected agencies concerning the proposed collection of information should address one or more of the following four points:

(1) Evaluate whether the proposed collection of information is necessary for the proper performance of the functions of the agency, including whether the information will have practical utility;

(2) Evaluate the accuracy of the agencies estimate of the burden of the proposed collection of information, including the validity of the methodology and assumptions used;

(3) Enhance the quality, utility, and clarity of the information to be collected; and

(4) Minimize the burden of the collection of information on those who are to respond, including through the use of appropriate automated, electronic, mechanical, or other technological collection techniques or other forms of information technology, e.g., permitting electronic submission of responses.

Overview of this information collection:

(1) Type of Information Collection: *Reinstatement without change of previously approved collection.*

(2) Title of the Form/Collection: Health and Human Services Statistical Data for Refugee/Asylee Adjusting Status.

(3) Agency form number, if any, and the applicable component of the Department of Justice sponsoring the collection: Form I–643. Adjudications Division, Immigration and Naturalization Service.

(4) Affected public who will be asked or required to respond, as well as a brief abstract: Primary: Individuals or households. The primary purpose of the data collected on this form is for use in the Office of Refugee Resettlement Report to Congress (8 U.S.C. 1523). The Service is required to report on the status of refugees at the time of adjustment to lawful permanent resident.

(5) An estimate of the total number of respondents and the amount of time estimated for an average respondent to respond: 195,000 responses at 30 minutes (.50 hours) per response.

(6) An estimate of the total public burden (in hours) associated with the collection: 97,500 annual burden hours

If you have additional comments, suggestions, or need a copy of the proposed information collection instrument with instructions, or additional information, please contact Richard A. Sloan 202–514–3291, Director, Policy Directives and Instructions Branch, Immigration and Naturalization Service, U.S. Department of Justice, Room 5307, 425 I Street, NW., Washington, DC 20536. Additionally, comments and/or suggestions regarding the item(s) contained in this notice, especially regarding the estimated public burden and associated response time may also be directed to Mr. Richard A. Sloan.

If additional information is required contact: Mr. Robert B. Briggs, Clearance Officer, United States Department of Justice, Information Management and Security Staff, Justice Management Division, Suite 850, Washington Center, 1001 G Street, NW., Washington, DC 20530.

Dated: March 26, 1999.

Richard A. Sloan,

Department Clearance Officer, United States Department of Justice, Immigration and Naturalization Service.

[FR Doc. 99–7964 Filed 3–31–99; 8:45 am]

BILLING CODE 4410–10–M

DEPARTMENT OF JUSTICE

Immigration and Naturalization Service

Agency Information Collection Activities: Comment Request

AGENCY: Notice of Information Collection Under Review; Application for Permission to Reapply for Admission into the United States after Deportation or Removal.

The Department of Justice, Immigration and Naturalization Service has submitted the following information collection request for review and clearance in accordance with the Paperwork Reduction Act of 1995. The proposed information collection is published to obtain comments from the public and affected agencies. Comments are encouraged and will be accepted for ''sixty days'' until June 1, 1999.

Written comments and suggestions from the public and affected agencies concerning the proposed collection of information should address one or more of the following four points:

(1) Evaluate whether the proposed collection of information is necessary for the proper performance of the functions of the agency, including whether the information will have practical utility;

(2) Evaluate the accuracy of the agencies estimate of the burden of the proposed collection of information, including the validity of the methodology and assumptions used;

(3) Enhance the quality, utility, and clarity of the information to be collected; and

(4) Minimize the burden of the collection of information on those who are to respond, including through the use of appropriate automated, electronic, mechanical, or other technological collection techniques or other forms of information technology, e.g., permitting electronic submission of responses.

Overview of this information collection:

(1) Type of Information Collection: *Reinstatement without change of previously approved collection.*

(2) Title of the Form/Collection: Application for Permission to Reapply for Admission into the United States after Deportation or Removal.

(3) Agency form number, if any, and the applicable component of the Department of Justice sponsoring the collection: Form I–212. Adjudications Division, Immigration and Naturalization Service.

(4) Affected public who will be asked or required to respond, as well as a brief abstract: Primary: Individuals or

households. This form provides information to be used to determine eligibility for a waiver for an inadmissible alien who is applying for a visa to enter the United States.

(5) An estimate of the total number of respondents and the amount of time estimated for an average respondent to respond: 7,250 responses at 20 minutes (.333) per response.

(6) An estimate of the total public burden (in hours) associated with the collection: 2,414 annual burden hours.

If you have additional comments, suggestions, or need a copy of the proposed information collection instrument with instructions, or additional information, please contact Richard A. Sloan 202–514–3291, Director, Policy Directives and Instructions Branch, Immigration and Naturalization Service, U.S. Department of Justice, Room 5307, 425 I Street, NW., Washington, DC 20536. Additionally, comments and/or suggestions regarding the item(s) contained in this notice, especially regarding the estimated public burden and associated response time may also be directed to Mr. Richard A. Sloan.

If additional information is required contact: Mr. Robert B. Briggs, Clearance Officer, United States Department of Justice, Information Management and Security Staff, Justice Management Division, Suite 850, Washington Center, 1001 G Street, NW., Washington, DC 20530.

Dated: March 26, 1999.

Richard A. Sloan,

Department Clearance Officer, United States Department of Justice, Immigration and Naturalization Service.

[FR Doc. 99–7965 Filed 3–31–99; 8:45 am]

BILLING CODE 4410–10–M

DEPARTMENT OF JUSTICE

Immigration and Naturalization Service

[INS No. 1965–98]

Designation of Nicaragua Under Temporary Protected Status; Correction

AGENCY: Immigration and Naturalization Service, Justice.

ACTION: Notice of correction.

SUMMARY: On January 5, 1999, the Immigration and Naturalization Service (Service) published a notice in the **Federal Register** at 64 FR 526 which designated Nicaragua under the Temporary Protected Status (TPS) program for 18 months. In the supplemental information to the notice of January 5, 1999, the Service inadvertently misstated that a Nicaraguan who is eligible to apply for adjustment under section 202 of the Nicaraguan Adjustment and Central American Relief Act (NACARA) must apply for adjustment prior to April 1, 2002. It should have instead stated that a Nicaraguan who is eligible to apply for adjustment under section 202 of NACARA must apply prior to April 1, 2000. The purpose of this notice is to inform potential applicants of the correct date and prevent individuals from missing the filing deadline.

DATES: This notice is effective April 1, 1999.

FOR FURTHER INFORMATION CONTACT: Michael Valverde, Immigration and Naturalization Service, Adjudications Division, 425 I Street, NW, Room 3214, Washington, DC 20536, telephone (202) 514–4754.

Dated: March 24, 1999.

Doris Meissner,

Commissioner, Immigration and Naturalization Service.

[FR Doc. 99–7966 Filed 3–31–99; 8:45 am]

BILLING CODE 4410–10–M

DEPARTMENT OF LABOR

Office of the Secretary

Submission for OMB Review; Comment Request

March 25, 1999.

The Department of Labor (DOL) has submitted the following public information collection request (ICR) to the Office of Management and Budget (OMB) for review and approval in accordance with the Paperwork Reduction Act of 1995 (Pub. L. 104–13, 44 U.S.C. Chapter 35). A copy of the ICR, with applicable supporting documentation, may be obtained by contacting the Department of Labor, Acting Department Clearance Officer, Pauline Perrow at (202) 219–5096, ext. 165 or by E-Mail at Perrow-Pauline@dol.gov.

Comments should be sent to the Office of Information and Regulatory Affairs, Attn: Desk Officer for Pension and Welfare Benefits Administration, Office of Management and Budget, Room 10235, Washington, DC 20503 ((202) 395-7316) on or before May 3, 1999.

OMB is particularly interested in comments that:

- Evaluate whether the proposed collection of information is necessary for the proper performance of the functions of the agency, including whether the information will have practical utility;
- Evaluate the accuracy of the agency's estimate of the burden of the proposed collection of information, including the validity of the methodology and assumptions used;
- Enhance the quality, utility, and clarity of the information to be collected; and
- Minimize the burden of the collection of information on those who are to respond, including through the use of appropriate automated, electronic, mechanical, or other technological collection techniques or other firms of information technology, e.g., permitting electronic submission of responses.

Agency: Pension and Welfare Benefits Administration.

Title: Summary Plan Description (SPD) Requirements under the Employee Retirement Income Security Act of 1974 (ERISA).

Type: Extension of emergency clearance for provisions of the interim final rule relating to the disclosure requirements of the Newborns' and Mothers' Health Protection Act of 1996 (NMHPA) (63 FR 48372, September 9, 1998).

OMB Numbers: 1210–0039.

Frequency: On occasion.

Affected Public: Individuals or households; business or other for-profit, Not-for-profit institutions.

Total Respondents: 888,393.

Total Responses: 52,115,000.

Estimated Burden Hours, Total Annual Burden: 746,983.

Total annual cost (operating and maintenance: $99,898,000.

Description: NMHPA amended ERISA by adding a new section 711 requiring group health plans to discloser to participants and beneficiaries new federal law restrictions on the extent to which group health plans and health insurance issuers may limit hospital lengths of stay for mothers and newborn children following delivery. Disclosure was required to be provided not later than 60 days after the first day of the first plan year beginning on or after January 1, 1998. On April 8, 1997 the Department issued interim final rules (62 FR 16979) implementing provisions of section 711 by amending the existing SPD content rules (29 CFR 2520.102–3) by requiring group health plan SPDs to include specific disclosures concerning minimum hospital lengths of stay for mothers and newborn children following childbirth. In response to subsequent public comment, and in recognition of a need for further clarification, the Department issued an interim final rule (63 FR 48372,

September 9, 1998) clarifying disclosure requirements with respect to an exception to the minimum length of stay requirement.

Pauline Perrow,

Acting Department Clearance Officer.

[FR Doc. 99–7833 Filed 3–31–99; 8:45 am]

BILLING CODE 4510–27–M

DEPARTMENT OF LABOR

Office of the Secretary

Submission for OMB Review; Comment Request

March 25, 1999.

The Department of Labor (DOL) has submitted the following public information collection requests (ICRs) to the Office of Management and Budget (OMB) for review and approval in accordance with the Paperwork Reduction Act of 1995 (Pub. L. 104–13, 44 U.S.C. Chapter 35). A copy of each individual ICR, with applicable supporting documentation, may be obtained by calling the Department of Labor, Departmental Clearance Officer, Pauline Perrow ({202} 219–5096, ext. 143), or by E-Mail to Perrow-Pauline@dol.gov.

Comments should be sent to Office of Information and Regulatory Affairs, Attn: OMB Desk Officers for BLS, DM, ESA, ETA, MSHA, OSHA, PWBA, or VETS, Office of Management and Budget, Room 10235, Washington, DC 20503 ({202} 395–7316), on or before May 3, 1999.

OMB is particularly interested in comments which:

- Evaluate whether the proposed collection of information is necessary for the proper performance of the functions of the agency, including whether the information will have practical utility;
- Evaluate the accuracy of the agency's estimate of the burden of the proposed collection of information, including the validity of the methodology and assumptions used;
- Enhance the quality, utility, and clarity of the information to be collected; and
- Minimize the burden of the collection of information on those who are to respond, including through the use of appropriate automated, electronic, mechanical, or other technological collection techniques or other forms of information technology, e.g., permitting electronics submission of responses.

Agency: Employment Standards Administration.

Title: Claim for Continuance of Compensation.

OMB Number: 1215–0154 (Extension).

Frequency: Annually.

Affected Public: Individuals or households.

Number of Respondents: 6,054.

Estimated Time Per Respondent: 1/12 of an hour.

Total Burden Hours: 505.

Total Annualized capital/startup costs: 0.

Total annual costs (operating/maintaining systems or purchasing services): $2,000.

Description: This form is used to obtain information on marital status of beneficiaries in death cases, in order to determine continued entitlement to benefits under the provisions of the Federal Employees' Compensation Act. The information provided is used by OWCP claims examiners to ensure that death benefits being paid are correct, and that payments are not made to ineligible survivors.

Agency: Employment Standards Administration.

Title: (1) Miner's Claim for Benefits Under the Black Lung Benefits Act; (2) Employment History; (3) Miner Reimbursement Form.

OMB Number: 1215–0052 (Extension).

Frequency: On-occasion.

Affected Public: Individuals or households; Business or other for-profit.

Number of Respondents: 20,200.

Estimated Time Per Respondent:

	Minutes	Respondents	Hours
CM–911	45	4,800	3,600
CM–911a	40	5,900	3,933
CM–915	10	9,500	1,583

Total Burden Hours: 9,116.

Total Annualized capital/startup costs: 0.

Total annual costs (operating/maintaining systems or purchasing services): $4,000.

Description: CM–911 A miner who applies for black lung benefits must complete the CM–911 (applicant form). The completed form gives basic identifying information about the applicant, the years of coal mine employment, dependents, earned income and income received from state workers' compensation as a result of pneumoconiosis.

CM–915 of the standard data collection form completed by miner payees when requesting reimbursement for black lung related medical services that are covered under the program. Miner payees, i.e., miners, authorized survivors and representatives, are entitled to reimbursement for out-of-pocket medical expenses incurred as a result of treatment for a black lung related condition.

CM–915 provides a systematic approach for gathering data essential to processing miner submitted medical bills in accordance with the program objectives.

Agency: Employment Standards Administration.

Title: Pre-Hearing Statement.

OMB Number: 1215–0085 (Extension).

Frequency: On Occasion.

Affected Public: Individuals or households; Business or other for-profit.

Number of Respondents: 6,800.

Estimated Time Per Respondent: 10 minutes.

Total Burden Hours: 1,088.

Total Annualized capital/startup costs: 0.

Total annual costs (operating/maintaining systems or purchasing services): $2,500.

Description: This form is used to refer cases for formal hearings under the Act. The information obtained is used to establish and clarify the issues involved. The information is used by OWCP district offices to prepare cases for hearing.

Agency: Employment Standards Administration.

Title: Overpayment Recover Questionnaire.

OMB Number: 1215–0144 (Extension).

Frequency: On-Occasion.

Affected Public: Individuals or households.

Number of Respondents: 4,500.

Estimated Time Per Respondent: one hour each.

Total Burden Hours: 4,500 (FECA: 3,500 and Black Lung 1,000).

Total Annualized capital/startup costs: 0.

Total annual costs (operating/maintaining systems or purchasing services): 2,000.

Description: The information on this form is used by OWCP examiners to ascertain the financial condition of the beneficiary to see if the overpayment or

any part can be recovered; to identify the possible concealment or improper transfer of assets; and to identify and consider present and potential income and current assets for enforced collection proceedings.

Agency: Employment Standards Administration.

Title: Applications to Employ Special Industrial Home workers and Workers with Disabilities.

OMB Number: 1215–0005 (Extension).

Frequency: On-Occasion.

Affected Public: Individuals of households; Business or other for profit; Not-for-Profit institutions; Farms; State, Local, or Tribal Government.

Number of Respondents: 8,600.

Estimated Time Per Respondent:

		Minutes	Respondents
	WH–2	30	100
	WH–226–MIS	45	8,500
	WH–226A–MIS	45	*8,500

*A total of 20,000 copies of this form will be completed by 8,500 respondents.

Total Burden Hours: 21,425.

Total Annualized capital/startup costs: 0.

Total annual costs (operating/maintaining systems or purchasing services): 3,000.

Description: The WH–2 is used by employers to obtain certificates to employ individual Home workers in one of the restricted homework industries: knitted outerwear, women's apparel, jewelry manufacturing, gloves and mittens, button and buckle manufacturing, handkerchief manufacturing and embroideries. Upon application by the home worker and the employer, certificates may be issued to the employer authorizing employment of an individual home worker, provided it is shown that the worker is unable to adjust to factory work because of age and physical or mental disability or is unable to leave home because the worker is required to care for an invalid in the home . . . etc.

The WH–226 and the supplemental data form WH–226A–MIS are used by employers to obtain authorization to employ workers with disabilities in competitive employment, in sheltered workshops, and in hospitals or institutions at subminimum wages which are commensurate with those paid to nondisabled workers.

Pauline D. Perrow,

Acting Departmental Clearance Officer.

[FR Doc. 99–7834 Filed 3–31–99; 8:45 am]

BILLING CODE 4510–29–M

DEPARTMENT OF LABOR

Employment and Training Administration

Job Training Partnership Act, Title III, Demonstration Program: Contextual Learning Demonstration Program

AGENCY: Employment and Training Administration, Labor.

ACTION: Notice of Availability of Funds and Solicitation for Grant Applications (SGA).

SUMMARY: The U.S. Department of Labor (DOL), Employment and Training Administration (ETA), announces a demonstration program to test the viability of innovative training strategies in reducing the time required for individuals with low basic skills to develop the skills needed to qualify for quality jobs in occupations and industry settings with long-term growth potential. This demonstration program is targeting workers who have been dislocated from declining industries and who have not only non-transferrable, obsolete job skills, but also low basic skills. This demonstration program has two special emphases: The use of contextual learning strategies to develop basic literacy skills in conjunction with the development of vocational skills, and strategies to develop such skills with limited-English-speaking populations.

The program will be funded with Secretary's National Reserve funds appropriated for Title III of the Job Training Partnership Act (JTPA) and administered in accordance with 29 CFR part 95 and 97 as applicable.

This notice describes the application submission requirements, the process that eligible entities must use to apply for funds covered by this solicitation, how grantees are to be selected, and the responsibilities of grantees. It is anticipated that up to $10 million will be available for funding the projects covered by this solicitation, that seven to twelve projects will be selected for funding, and that the maximum grant award will not exceed $1 million.

All information required to submit a grant application under this solicitation is contained in this announcement.

DATES: The closing date for receipt of applications is May 10, 1999 at 2 p.m. (Eastern Time) at the address below. Except as provided below, grant applications received after this date and time will not be considered.

ADDRESSES: Applications shall be mailed to: U.S. Department of Labor; Employment and Training Administration; Division of Federal Assistance; Attention: Willie E. Harris, Reference: SGA/DAA 99–008; 200 Constitution Avenue, NW, Room S–4203; Washington, DC 20210.

FOR FURTHER INFORMATION CONTACT: Mr. Willie E. Harris, Division of Federal Assistance. Telephone (202) 219–8706, extension 119 (this is not a toll-free number). Questions may also be faxed to Mr. Willie E. Harris, Grant Management Specialist, Fax Number: (202) 219–8739. All inquiries sent via fax should include the SGA number (DFA 99–008) and a contact name and phone number.

SUPPLEMENTARY INFORMATION:

This announcement consists of five parts. Part I describes the authorities and purpose of the demonstration program and identifies demonstration policy. Part II describes the application process and provides guidelines for use in applying for demonstration grants. There is no separate application package. Part III includes the Government Requirement/Statement of Work for the demonstration projects. Part IV describes the selection process, including the criteria that will be used in reviewing and evaluating applications. Part V describes the grantee's responsibilities related to program monitoring, reporting and evaluation.

Part I. Background

A. Authorities

Section 323 of JTPA (29 U.S.C. 1662b) authorizes the use for demonstration programs of funds reserved under section 302 of JTPA (29 U.S.C. 1652) and provided by the Secretary for that purpose under section 322 of JTPA (29 U.S.C. 1662a). Demonstration program grantees shall comply with all applicable federal and state laws and

regulations in setting up and carrying out their programs.

B. Purpose

Global competition and expanding technology are contributing to a dynamism in the workplace that presents significant challenges as well as opportunities for many workers. Skills related to continuous learning, communications, and independent problem-solving are critical to job and career success. As never before, basic literacy skills are a pre-requisite for most employment opportunities, and certainly for most jobs that pay a reasonable wage.

Projects funded through this solicitation are to provide retraining and related services—consistent with the allowable use of JPTA Title III funds as defined in sections 314(c), 314(d), and 314(e) of the Act—designed to help eligible dislocated workers with low basic skills transition into quality jobs with a 90 percent wage replacement rate for the workers. Projects must be designed to accomplish the following objectives:

- Develop (if necessary) and implement curricula that integrate the learning of basic literacy skills with the learning of vocational skills;
- Develop (if necessary) and implement training methods that accelerate the learning process and shorten the time period required to meet employer hiring requirements; and
- Implement training strategies for the acquisition of skills that are driven by the hiring requirements of local employers and that entail the development of skills—both basic and vocational—in a workplace setting.

Applications should incorporate curricula and training strategies that can be effectively used with limited English-speaking populations and that are transferrable for use in the broader workforce development system. Curricula should include aspects of contextual training, which integrates literacy into technical training in order that skills learned have an obvious payoff in terms of preparing workers for occupations. Both curricula developed and training strategies proposed may differ, depending upon whether basic skills combined with occupational training are taught to a native-English-speaking or non-native-English-speaking population. Applicants must justify the selection of a particular type of curriculum based upon citations of sound research findings and/or demonstrated experience, and the needs of the target population.

C. Demonstration Policy

1. Grant Awards

DOL anticipates awarding seven to twelve grants. Individual grant awards will not exceed $1 million. It is anticipated that awards will be made by June 30, 1999. Award decisions will be published on the Internet at ETA's Home Page at http://www.doleta.gov.

2. Eligible Applicants

Subject to the provisions of this section, any organization capable of fulfilling the terms and conditions of this solicitation may apply. Under Lobbying Disclosure Act of 1995, Section 18, an organization described in section 501(c)(4) of the Internal Revenue code of 1986 which engages in lobbying activities shall not be eligible for the receipt of Federal funds constituting an award grant or loan. This is a risk free Federal program; therefore, all for profit organizations that apply will not be able to receive a fee if awarded a grant.

Any applicant who is not a JTPA Title III substate grantee will be required to demonstrate evidence of partnership or coordination with the substate grantee(s) in the proposed service area for the delivery of comprehensive services to the target group. Such evidence may include memoranda of agreement or understanding and letters of commitment. Applicants are also encouraged to work with local Adult Basic Education providers.

3. Eligible Participants

All individuals receiving retraining and related services must be eligible dislocated workers as defined at JTPA section 301(a)(1), and 314(h)(1) of the Job Training Partnership Act. These sections of the law may be viewed at http://www.doleta.gov/regs/statutes/jtpalaw.htm.

Proposed projects should target subgroups of the eligible population based on factors such as (but not limited to) occupation, industry, and specific barriers to reemployment. Proposed projects will be expected to target individuals whose basic skills are low and well below the hiring standards of area employers.

4. Allowable Activities

Funds provided through this demonstration are limited to the costs of developing/refining training curricula in accordance with the requirements defined in this solicitation, providing services of the type described at section 314(c), (d) and (e) of JTPA, and administering the project. Supportive services are defined in section 4(24) of JTPA.

Grant funds may not be used for the cost of any services or activities that would have been provided in the absence of the requested grant. Applicants may budget limited amounts of grant funds to work with technical experts or consultants to provide advice and develop more complete project plans after a grant award. The level of detail in the project plan may affect the amount of funding provided.

5. Coordination

Applicants will be expected to plan and coordinate the delivery of services under this demonstration project with the delivery of services under other programs (public or private), available to all or part of the target group. At a minimum, projects will be expected to link or collaborate with any existing USDOL funded One-Stop/Career Center initiative and/or local JTPA Substate Grantee located within the project area. Applicants are encouraged to coordinate with local Adult Basic Education providers.

6. Period of Performance

The period of performance shall be 24 months from the date of execution by the Government. Delivery of services to participants shall commence within 90 days of execution of a grant.

7. Option to Extend

DOL may elect to exercise its option to extend these grants for an additional one (1) or two (2) years of operation, based on the availability of funds, successful program operation, and the needs of the Department.

Part II. Application Process and Guidelines

A. Submission of Applications

An original and three (3) copies of the application shall be submitted. The application shall consist of two (2) separate and distinct parts: Part I, the Financial Proposal, and Part II, the Technical Proposal.

Each grant application must follow the format outlined in this part and should include:

(1) Information that indicates adherence to the provisions described in Part I, Background (Authorities, Purpose, and Demonstration Policy) and Part II, Application Process and Guidelines, of this announcement; and

(2) Other information that the applicant believes will address the selection criteria identified in Part IV of this solicitation.

1. Financial Application

Part I, the Financial Proposal, shall contain the SF–424, ''Application for

Federal Assistance'' (Appendix A) and the ''Budget Information'' (Appendix B). The Federal Domestic Assistance Catalog number is 17.246.

The budget shall include on separate pages detailed breakouts of each proposed budget line item, including detailed administrative costs and costs for one or more of the following categories as applicable: basic readjustment services, supportive services, and retraining services. For each budget line item that includes funds or in-kind contributions from a source other than the grant funds, identify the source, the amount, and in-kind contributions, including any restrictions that may apply to these funds.

Applicants must justify that proposed costs are reasonable. The impact of innovation on costs should be explained. Grant applications will be evaluated for the reasonableness of proposed costs, considering the proposed target group, services, outcomes, management plan, and coordination with other entities.

2. Technical Proposal

Part II, the technical proposal, shall demonstrate the offeror's capabilities in accordance with the required elements of the proposal outlined below. The technical proposal should contain information sufficient to respond to the objectives of the solicitation, the statement of work and the evaluation criteria.

A grant application shall be limited to twenty (20) double-spaced, single-side, 8.5-inch x 11-inch pages with 1-inch margins. Attachments shall not exceed ten (10) pages. Text type shall be 11 point or larger. Applications that do not meet these requirements will not be considered. Each application shall include the Checklist provided as Appendix C, a Timeline outlining project activities, and an Executive Summary not to exceed two pages. No Cost Data or Reference to Price Shall be Included in The Technical Proposal.

Applicants are advised that discussions may be necessary in order to clarify any inconsistency or ambiguity in their applications. The final decision on awards will be based on what is most advantageous to the Federal Government as determined by the ETA Grant Officer. The Government may elect to award grant(s) without discussion with the applicant(s). The applicant's signature on the Application for Federal Assistance (Standard Form) S–424 constitutes a binding offer.

B. Hand-Delivered Applications

Applications should be mailed no later than five (5) days prior to the closing date for the receipt of applications. However, if applications are hand-delivered, they must be received at the designated place by 2 p.m., Eastern Time on the closing date for receipt of applications. All overnight mail will be considered to be hand-delivered and must be received at the designated place by the specified time and closing date. Telegraphed and/or faxed proposals will not be honored. Applications that fail to adhere to the above instructions will not be honored.

C. Late Applications

Any application received at the office designated in the solicitation after the exact time specified for receipt will not be considered unless it:

(1) Was sent by U.S. Postal Service registered or certified mail not later than the fifth calendar day before the closing date specified for receipt of applications (e.g., an offer submitted in response to a solicitation requiring receipt of application by the 30th of January must have been mailed by the 25th); or

(2) Was sent by U.S. Postal Service Express Mail Next Day Service—Post Office to Addressee, not later than 5 p.m. at the place of mailing two working days prior to the date specified for receipt of application. The term ''working days'' excludes weekends and U.S. Federal holidays.

The only acceptable evidence to establish the date of mailing of a late application sent by U.S. Postal Service registered or certified mail is the U.S. postmark on the envelope or wrapper and on the original receipt from the U.S. Postal Service. Both postmarks must show a legible date or the proposal shall be processed as if it had been mailed late. ''Postmark'' means a printed, stamped, or otherwise placed impression (exclusive of a postage meter machine impression) that is readily identifiable without further action as having been supplied and affixed by an employee of the U.S. Postal Service on the date of mailing. Therefore, applicants should request the postal clerk to place a legible hand cancellation ''bull's eye'' postmark on both the receipt and the envelope or wrapper.

The only acceptable evidence to establish the date of mailing of a late application sent by ''Express Mail Next-Day Service—Post Office to Addressee'' is the date entered by the post office receiving clerk on the ''Express Mail Next Day Service—Post Office to Addressee'' label and the postmarks on both the envelope and wrapper and the original receipt from the U.S. Postal Service. ''Postmark'' has the same meaning as defined above. Therefore, an applicant should request the postal clerk to place a legible hand cancellation ''bull's eye'' postmark on both the receipt and the envelope or wrapper.

D. Withdrawal of Applications

Applications may be withdrawn by written notice or telegram (including mailgram) received at any time before award. Applications may be withdrawn in person by the applicant or by an authorized representative thereof, if the representative's identity is made known and the representative signs a receipt for the proposal.

Part III Government Requirement/ Statement of Work

A. Project Service Area

Describe the area in which the project will operate. Projects funded through this solicitation will be expected to be based in local labor markets. Provide an explanation of the economic and labor market circumstances in the local area that make it an appropriate candidate for this demonstration program.

B. Target Population

Describe the proposed target population for the project. The description should include: number of individuals to be served through the project; date(s) of dislocation or the length of time the target group has been unemployed; occupations and wages of jobs from which they were dislocated; and specific barriers to reemployment. To the extent that the applicant expects to serve individuals who are not yet dislocated but are likely to be during the initial stages of the grant period, the applicant must justify why it believes that such dislocations are likely to occur. The description should also include information to support the planned level of participation in the project (i.e., number of eligibles within target group in the local area, indications of the need for assistance).

C. Available Jobs

Identify the occupations that are targeted for job placement of project participants and provide a brief explanation of the appropriateness of these occupations given local labor market conditions, wage replacement potential for the target group and upward mobility/job retention opportunities. Identify sources of the occupational information or data used. Anecdotal data should not be used. Information from the Bureau of Labor

Statistics (BLS) available through a variety of web sites including BLS, O*NET and America's Labor Market Information System (ALMIS), should be considered as a key source of documentation. In addition, State Occupational Information Coordinating Committee (SOICC) and JTPA Substate Grantee/One-Stop Center program information may be used.

D. Project Design

(1) Purpose. Describe the specific purpose or purposes of the proposed project and how these relate to the objectives of this solicitation. Describe how contextual learning will be integrated into the design of curricula and into training proposed.

(2) Outreach and recruitment. Identify the methods that will be used to contact and recruit members of the target group for participation in this project and the organizations who will be responsible for the outreach/recruitment activities. Describe why the methods and organizations will be effective in achieving the planned participation levels for the project. Applicants that are not JTPA Title III substate grantees should partner with the appropriate JTPA Title III substate grantee(s) to plan and implement effective outreach and recruitment strategies.

(3) Eligibility determination. Identify the organization which will responsible for determining the eligibility of individuals for participation in this project and the experience of the organization in determining the eligibility of individuals for JTPA Title III assistance. Applicants who are not JTPA Title III substate grantees should partner with the appropriate JTPA Title III substate grantee(s) to carry out eligibility determination.

(4) Selection criteria. Identify the criteria that will be used, and the organization(s) that will be responsible for selecting those individuals to be served by the project from among the total number of eligible persons recruited for the project. Describe how this process will achieve the specific purpose(s) of the proposed project, including, as appropriate, targeted assistance to individuals with limited English-speaking ability.

(5) Assessment. Identify assessment tools and/or methods that will be used to determine the skills and aptitudes of individual participants. Specifically identify the tools that will be used to measure English-speaking proficiency, and for limited English-speaking individuals, the basic skills levels of the individual. Describe the approaches or methods that will be used to relate prior experience(s) to employer hiring requirements. Describe the specific strategies and methods for measuring skills acquisition during the training process.

(6) Services to be provided. Describe the service process to be used on the project. The description should include identification of the services to be provided from the time of selection of participants through placement of those participants in jobs, the sequencing of services in the overall process, the criteria/decision points for determining the appropriateness of specific services for an individual participant, and the organization(s) which will be responsible for providing specific services. The process description may be supported by a participant flowchart.

(7) *Contextual learning training strategies.* Describe how experiential, integrated and other effective adult learning methods will be used in implementing education and training services to be provided to participants. Describe how these methods are expected to: (a) Shorten the calendar time required for individuals to acquire the skills needed to qualify for targeted employment opportunities; (b) increase the relevance/responsiveness of training to the job performance requirements of employers; and (c) increase the direct participation of employers in the training process. Specifically describe strategies that will be used to teach limited English-speaking individuals with low basic skills in their native language.

(8) *Supportive services.* Identify supportive services, including needs-related payments, to be provided to participants. Describe how the need for such services will be determined on an individual basis and why such services are expected to be needed to facilitate participation in the project by the target group. Also identify any limits on the amount of such services that can be received by any individual participant.

(9) *Post-placement services.* Identify any services to be provided subsequent to job placement. Describe the rationale for the services and why such services will be necessary for participants to be successfully placed into jobs and to retain those jobs. The identification should include services to be funded from sources other than the grant.

E. Planned Outcomes

Identify the specific project outcome measures that will be used to determine the success of the project. For each measure, identify the planned outcome level to be achieved by the project.

Outcome measures must include, but are not limited to:

(1) The number of participants to receive services through the project;

(2) The number of participants to receive training using contextual learning strategies;

(3) The number of participants to be placed into permanent employment [a minimum entered employment rate of 80 percent is required];

(4) The average wage at placement and the wage replacement rate for participants placed into permanent employment (a minimum wage replacement rate of 90 percent is required);

(5) Customer satisfaction with the project services (a minimum of 80 percent of participants must indicate satisfaction with the services received through the project).

The applicant may propose additional measurable, performance-based outcomes that are relevant to the project and that may be readily assessed during the period of performance of the project. When proposed, the applicant must provide an explanation of how such additional measures are relevant to the purpose of the demonstration program.

F. Implementation Plan

(1) Identify the critical activities, time frames and responsibilities for effectively implementing the project that will occur within the first 90 days after the award of the grant.

(2) Include a completed monthly schedule that shows the cumulative number of participants, enrollments in education and training activities, enrollments in contextual learning training activities, permanent placements into unsubsidized employment, receiving post-placement services, and terminations.

G. Collaboration/Leveraging of Resources

(1) Identify other State and local organization(s) which are collaborating and/or contributing resources to the design and implementation of the proposed project. Describe the role and contributions of each. Contributions may include but are not limited to such contributions as the development of training modules; payment of tuition costs for training; support for child care or transportation; and provision of staff time and training facilities, equipment and materials at no cost to the project. Particular attention should be paid to the potential contributions available through adult basic education and Trade Adjustment Assistance programs, if applicable.

(2) Provide evidence which indicates that the collaboration described can reasonably be expected to occur. Such

evidence could include letters of agreement, memoranda of understanding, or formally established advisory councils.

(3) Describe activities that may be undertaken to link activities to program interventions under this grant to employer, industry, or curriculum/ learning centers currently designing and developing occupational/job skill standards and certifications. Such activities should focus on linking employers involved in grant activities with any employer, industry, or trade and worker association that has already developed or is developing skill standards certifications in order to maximize the use of knowledge that has been gained about skills and their relationship to contextual learning.

H. Consultation

The application must describe the working relationship with the local JTPA substate grantee(s), or One-Stop/ Career Center entities where present. Prior to commencing operations, grant award recipients that are not JTPA substate grantees will be required to submit a jointly signed Memorandum of Understanding with substate grantees describing such working relationship. The application must also include evidence of consultation, such as a letter, on the project concept with applicable labor organizations where 20 percent or more of the targeted population is represented by one or more labor organizations, or where the training is for jobs in which a labor organization represents a substantial number of workers engaged in similar work.

I. Innovation

Identify any elements in the proposed project design that are innovative. Describe why the elements are considered to be innovative and how they are expected to improve current methods being used to provide reemployment services to the target group.

J. Project Management Plan

Applicants must be able to demonstrate that they have systems capable of satisfying the administrative and grant management requirements for the use of JTPA funds as defined in 20 CFR part 627 subpart D. The application must include the following information:

(1) *Structure.* Describe the management structure for the project. The description must include: (a) A staffing plan that describes each position and the percentage of time to be assigned to this project; (b) an organizational chart that clearly indicates the working and responsibility/ accountability relationships among project management and operational components, including, as appropriate, those at multiple sites of the project.

(2) Relationship to prior experience. Describe the specific experience of the applicant and other key organizations involved in the project with contextual learning training strategies and providing reemployment assistance to low skilled and/or limited English-proficient populations. Describe how proposed training provider(s) will be selected. Past performance of providers, qualifications of instructors, accreditation of curricula, and similar matters should be addressed as appropriate.

(3) *Accountability systems.* Describe the mechanisms to ensure financial accountability for grant funds and performance accountability relative to job placements, in accordance with standards for financial management and participant data systems in 29 CFR part 95 or 97, as appropriate, and 20 CFR 627.425. Explain the basis for the applicant's administrative authority over the management and operational components. Describe how information will be collected to determine the achievement of project outcomes as indicated in section E of this part; and report on participants, outcomes, and expenditures. (If the applicant is not a current DOL grantee, this information is subject to verification prior to grant award.)

(4) *Customer satisfaction measurement system.* Describe the process and procedures that will be used to obtain feedback from individual participants and from employers on the responsiveness and effectiveness of the services provided. The description should include an identification of the types of information to be obtained, the method(s) and frequency of data collection, and how the information will be used in implementing and managing the project.

(5) *Monitoring and performance management.* Describe the procedures that will be used to effectively control and management project performance and the use of grant funds. The description should identify areas to be reviewed, frequency, and responsibilities.

(6) *Grievance procedure.* Describe the grievance procedure to be used for grievances and complaints from participants, contractors, and other interested parties, consistent with the requirements at section 144 of JTPA and 20 CFR 631.64(b) and (c).

Part IV. Evaluation Criteria

Selection of grantees for awards will be made after careful evaluation of grant applications by a panel of experts. Panel results will be advisory in nature and not binding on the ETA Grant Officer. Panelists shall evaluate proposals for acceptability based upon overall responsiveness in accordance with the factors below.

A. Target Population. (20 points)

The description of the characteristics and reemployment barriers of the target group to be served is clear and meaningful, and sufficiently detailed to determine the potential participants' service need. A significant number of eligible dislocated workers who possess these characteristics are available for participation within the project area. Sufficient information is provided to explain how the number of dislocated workers to be enrolled in the project was determined. The recruitment plan supports the number of planned enrollments. The target population is appropriate for the specific purpose of the proposed project, including the relative literacy and numeracy deficiencies. Extent to which target population is characterized by limited-English-speaking ability.

B. Service Plan and Cost. (25 points)

The scope of services to be provided is consistent with the demonstration program and project purposes and goals. The scope of services to be provided is adequate to meet the needs of the target population given:

(1) Their characteristics and circumstances, including their English proficiency and other basic skill needs;

(2) The jobs in which they are to be placed relative to targeted wage at placement goals;

(3) The match between documented shortages in particular skills or industries and the training planned;

(4) The documentation provided specifying that training meets or is developed based on industry driven skill standards or certifications; and (5) the length of program participation planned prior to placement.

Documentation and reliability of job availability is based upon recognized, reliable and timely sources of information.

Identification is provided of the specific sources and amounts of other funds which will be used, in addition to funds provided through this grant, to implement the project. The application must include information on any non-JTPA resources committed to this project, including employer funds,

grants, and other forms of assistance, public and private. Value and level of external resources being contributed, including employer contributions, to achieve program goals will be taken into consideration in the rating process.

C. Experience and Management Capability. (15 points)

The applicant (as a part of a collaborative approach) has experience working with experiential and integrated learning strategies, specifically with a limited-English proficient population. The management structure and management plan for the proposed project will ensure the integrity of the funds requested. The project work plan demonstrates the applicant's ability to effectively track project progress with respect to planned performance and expenditures. Sufficient procedures are in place to use the information obtained by the project operator(s) to take corrective action if indicated. In addition, review by appropriate labor organizations, where applicable, is documented.

The proposal includes a method of assessing customer feedback for both participants and employers involved, and establishes a mechanism to take into account the results of such feedback as part of a continuous system of management and operation of the project.

D. Collaboration. (10 points)

The proposal includes information describing direct participation by JTPA substate grantees and One-Stop/Career Center entities (where present) in the planning and management of this grant. Evidence of participation of employers whose positions are targeted under the grant is present. Evidence of coordination with other appropriate programs and entities for project design or provision of services. Evidence is presented that ensures cooperation of coordinating entities, as applicable, for the life of the proposed project. The project includes a reasonable method of assessing and reporting on the impact of such coordination, relative to the demonstration purpose and goals and the specific purpose and goals of the proposed project.

E. Innovation. (20 points)

The proposal demonstrates innovation in the concept(s) to be tested, the project's design, and/or the services to be provided. ''Innovation'' refers to the degree to which such concept(s), design and/or services are not currently found in dislocated worker programs. The project includes a reasonable method of assessing and reporting on the impact of such innovation, relative to the demonstration program and project purposes and goals.

F. Replicability. (10 points)

The proposal provides evidence that, if successful, activities supported by the demonstration grant will be continued after the expiration date of the grant, using JTPA Title III formula-allotted funds or other public or private resources. Evidence that the strategies are usable in other local operating environments.

Part V. Monitoring, Reporting and Evaluation

A. Monitoring

The Department shall be responsible for ensuring effective implementation of each competitive grant project in accordance with the Act, the regulations, the provisions of this announcement and the negotiated grant agreement. Applicants should assume that at least one on-site project review will be conducted by Department staff, or their designees. This review will focus on the project's performance in meeting the grant's programmatic goals and participant outcomes, complying with the targeting requirements regarding participants who are served, expenditure of grant funds on allowable activities, collaboration with other organizations as required, and methods for assessment of the responsiveness and effectiveness of the services being provided. Grants may be subject to their additional reviews at the discretion of the Department.

B. Reporting

DOL will arrange for or provide technical assistance to grantees in establishing appropriate reporting and data collection methods and processes. An effort will be made to accommodate and provide assistance to grantees to be able to complete all reporting electronically.

Applicants selected as grantees will be required to provide the following reports:

1. Monthly and Quarterly Progress Reports
2. Standard Form 269, Financial Status Report Form, on a quarterly basis
3. Final Project Report including an assessment of project performance. This report will be submitted in hard copy and on electronic disk utilizing a format and instructions to be provided by the Department.

C. Evaluation

DOL will arrange for or conduct an independent evaluation of the outcomes, impacts, and benefits of the demonstration projects. Grantees must agree to make available records on participants and employers and to provide access to personnel, as specified by the evaluator(s) under the direction of the Department.

Signed at Washington, DC, this 25th day of March 1999.

Janice E. Perry,

Grant Officer, Division of Federal Assistance.

Appendices

1. Appendix A—Application for Federal Assistance (Standard Form 424) (Internet link)
2. Appendix B—Information (Internet link)
3. Appendix C—Application Checklist (Internet link)

Web site address is http://www.doleta.gov

BILLING 4510–30–P

APPLICATION FOR FEDERAL ASSISTANCE

OMB Approval No. 0348-0043

1. TYPE OF SUBMISSION: Application ☐ Construction ☐ Non-Construction / Preapplication ☐ Construction ☐ Non-Construction	2. DATE SUBMITTED	Applicant Identifier
	3. DATE RECEIVED BY STATE	State Application Identifier
	4. DATE RECEIVED BY FEDERAL AGENCY	Federal Identifier

5. APPLICANT INFORMATION

Legal Name:	Organizational Unit:
Address (give city, county, State and zip code):	Name and telephone number of the person to be contacted on matters involving this application (give area code):

6. EMPLOYER IDENTIFICATION NUMBER (EIN):

☐☐-☐☐☐☐☐☐☐

7. TYPE OF APPLICANT: (enter appropriate letter in box) ☐

A. State
B. County
C. Municipal
D. Township
E. Interstate
F. Intermunicipal
G. Special District
H. Independent School Dist.
I. State Controlled Institution of Higher Learning
J. Private University
K. Indian Tribe
L. Individual
M. Profit Organization
N. Other (Specify): _____

8. TYPE OF APPLICATION:
☐ New ☐ Continuation ☐ Revision

If Revision, enter appropriate letter(s) in box(es): ☐ ☐

A. Increase Award B. Decrease Award C. Increase Duration
D. Decrease Duration Other (specify):

_____

9. NAME OF FEDERAL AGENCY:

10. CATALOG OF FEDERAL DOMESTIC ASSISTANCE NUMBER:

☐☐-☐☐☐

TITLE:

11. DESCRIPTIVE TITLE OF APPLICANT'S PROJECT:

12. AREAS AFFECTED BY PROJECT (cities, counties, States, etc.):

13. PROPOSED PROJECT:		14. CONGRESSIONAL DISTRICTS OF:	
Start Date	Ending Date	a. Applicant	b. Project

15. ESTIMATED FUNDING:	
a. Federal	$ .00
b. Applicant	$ .00
c. State	$ .00
d. Local	$ .00
e. Other	$ .00
f. Program Income	$ .00
g. TOTAL	$ .00

16. IS APPLICATION SUBJECT TO REVIEW BY STATE EXECUTIVE ORDER 12372 PROCESS?

a. YES. THIS PREAPPLICATION/APPLICATION WAS MADE AVAILABLE TO THE STATE EXECUTIVE ORDER 12372 PROCESS FOR REVIEW ON

DATE _____

b. NO. ☐ PROGRAM IS NOT COVERED BY E.O. 12372

☐ OR PROGRAM HAS NOT BEEN SELECTED BY STATE FOR REVIEW

17. IS THE APPLICANT DELINQUENT ON ANY FEDERAL DEBT?

☐ Yes If "Yes," attach an explanation. ☐ No

18. TO THE BEST OF MY KNOWLEDGE AND BELIEF, ALL DATA IN THIS APPLICATION/PREAPPLICATION ARE TRUE AND CORRECT. THE DOCUMENT HAS BEEN DULY AUTHORIZED BY THE GOVERNING BODY OF THE APPLICANT AND THE APPLICANT WILL COMPLY WITH THE ATTACHED ASSURANCES IF THE ASSISTANCE IS AWARDED.

a. Typed Name of Authorized Representative	b. Title	c. Telephone number
d. Signature of Authorized Representative		e. Date Signed

Previous Editions Not Usable

Standard Form 424 (REV 4-88)
Prescribed by OMB Circular A-102

Authorized for Local Reproduction

INSTRUCTIONS FOR THE SF 424

This is a standard form used by applicants as a required facesheet for preapplications and applications submitted for Federal assistance. It will be used by Federal agencies to obtain applicant certification that States which ave established a review and comment procedure in response to Executive Order 12372 and have selected the program to be included in their process, have been given an opportunity to review the applicant's submission.

Item:	Entry:
1.	Self-explanatory.
2.	Date application submitted to Federal agency (or State if applicable) & applicant's control number (if applicable).
3.	State use only (if applicable)
4.	If this application is to continue or revise an existing award, enter present Federal identifier number. If for a new project, leave blank.
5.	Legal name of applicant, name of primary organizational unit which will undertake this assistance activity, complete address of the applicant, and name and telephone number of the person to contact on matters related to this application.
6.	Enter Employer Identification Number (EIN) as assigned by the Internal Revenue Service.
7.	Enter the appropriate letter in the space provided.
8.	Check appropriate box and enter appropriate letter(s) in the space(s) provided. - "New" means a new assistance award. - "Continuation" means an extension for an additional funding/budget period for a project with a projected completion date. - "Revision" means any change in the Federal Government's financial obligation or contingent liability from an existing obligation.
9.	Name of Federal agency from which assistance is being requested with this application.
10.	Use the Catalog of Federal Domestic Assistance number and title of the program under which assistance is required.
11.	Enter a brief descriptive title of the project. If more than one program is involved, you should append an explanation on a separate sheet. If appropriate (e.g., construction or real property projects), attach a map showing project location. For preapplications, use a separate sheet to provide a summary description of the project.
12.	List only the largest political entities affected (e.g., State, counties, cities.
13.	Self-explanatory.
14.	List the applicant's Congressional District and any District(s) affected by the program or project.
15.	Amount requested or to be contributed during the first funding/budget period by each contributor. Value of in-kind contributions should be included on appropriate lines as applicable. If the action will result in a dollar change to an existing award, indicate only the amount of the change. For decreases, enclose the amounts in parentheses. If both basic and supplemental amounts are included, show breakdown on an attached sheet. For multiple program funding, use totals and show breakdown using same categories as item 15.
16.	Applicants should contact the State Single Point of Contact (SPOC) for Federal Executive Order 12372 to determine whether the application is subject to the State intergovernmental review process.
17.	This question applies to the applicant organization, not the person who signs as the authorized representative. Categories of debt include delinquent audit disallowances, loans and taxes.
18.	To be signed by the authorized representative of the applicant. A copy of the governing body's authorization for you to sign this application as official representative must be on file in the applicant's office. (Certain Federal agencies may require that this authorization be submitted as part of the application.)

PART II - BUDGET INFORMATION

SECTION A - Budget Summary by Categories

	(A)	(B)	(C)
1. Personnel			
2. Fringe Benefits (Rate %)			
3. Travel			
4. Equipment			
5. Supplies			
6. Contractual			
7. Other			
8. Total, Direct Cost (Lines 1 through 7)			
9. Indirect Cost (Rate %)			
10. Training Cost/Stipends			
11. TOTAL Funds Requested (Lines 8 through 10)			

SECTION B - Cost Sharing/ Match Summary (if appropriate)

	(A)	(B)	(C)
1. Cash Contribution			
2. In-Kind Contribution			
3. TOTAL Cost Sharing / Match (Rate %)			

NOTE: Use Column A to record funds requested for the initial period of performance (i.e. 12 months, 18 months, etc.); Column B to record changes to Column A (i.e. requests for additional funds or line item changes; and Column C to record the totals (A plus B).

INSTRUCTIONS FOR PART II - BUDGET INFORMATION

SECTION A - Budget Summary by Categories

1. ***Personnel:*** *Show salaries to be paid for project personnel.*

2. ***Fringe Benefits****: Indicate the rate and amount of fringe benefits.*

3. ***Travel****: Indicate the amount requested for staff travel. Include funds to cover at least one trip to Washington, DC for project director or designee.*

4. ***Equipment****: Indicate the cost of non-expendable personal property that has a useful life of more than one year with a per unit cost of $5,000 or more.*

5. ***Supplies****: Include the cost of consumable supplies and materials to be used during the project period.*

6. ***Contractual****: Show the amount to be used for (1) procurement contracts (except those which belong on other lines such as supplies and equipment); and (2) sub-contracts/grants.*

7. ***Other****: Indicate all direct costs not clearly covered by lines 1 through 6 above, including consultants.*

8. ***Total, Direct Costs****: Add lines 1 through 7.*

9. ***Indirect Costs****: Indicate the rate and amount of indirect costs. Please include a copy of your negotiated Indirect Cost Agreement.*

10. ***Training /Stipend Cost:*** *(If allowable)*

11. ***Total Federal funds Requested****: Show total of lines 8 through 10.*

SECTION B - Cost Sharing/Matching Summary

Indicate the actual rate and amount of cost sharing/matching when there is a cost sharing/matching requirement. Also include percentage of total project cost and indicate source of cost sharing/matching funds, i.e. other Federal source or other Non-Federal source.

NOTE:

PLEASE INCLUDE A DETAILED COST ANALYSIS OF EACH LINE ITEM.

Application Checklist

Please complete and submit this checklist with your application. It should be used as a quick reference of key provisions of the Solicitation and whether or not these provisions have been included, complied with or addressed. This document is not intended to be comprehensive or address every aspect of the solicitation.

Organization Applying_____.

Contact Person_____.

Phone Number_____.

Date submitted_____.

Application Process

___Application is 20 pages or less.
___Attachments limited to 10 or fewer.
___An original and three copies submitted.
___SF424 (Appendix A) included.
___SF424a (Appendix B) included.
___Project Line-Item Budget Estimates (Appendix C) included.
___Checklist (Attachment D) included.
___Timeline included.
___Executive Summary of two pages or less included.

Financial and Technical Provisions

___Target Population identified, with supportive documentation.
___Underrepresented subgroup identified and services addressed.
___Number and type of targeted jobs, applicable skill sets and certifications/standards identified.
___Sources and credibility of labor market/job data cited.
___Approach to identifying and recruiting eligible participants included.
___Eligibility determination approach discussed.
___Process in selecting eligible participants discussed.
___Sequence of services and activities to be provided discussed.
___Justification and qualifications for each training provider (including instructors) discussed.
___Cost/Price analysis for use of specified training included.
___Relocation Assistance, if used, addressed.
___Flowchart of participant services included.
___Applicants' prior experience with dislocated workers addressed.

___All project outcomes and measures of success specified in Part III D addressed.
___Role and involvement in the project of employers experiencing skill shortages discussed and documented.

___Role of the local JTPA Substate Grantee for dislocated worker programs and One-Stop/Career Center system discussed and documented.
___Method of assessing and reporting continuation and impact of coordination included.
___Specific skill standards and certification for targeted occupations identified and discussed.
___Labor organization consultation, where applicable, discussed and documented.
___Coordination with other entities discussed.
___Innovation and impact of the project discussed.
___Management structure and staffing plan addressed and method of continuous oversight described.
___Organizational chart and relationships included.
___Mechanism to ensure financial accountability discussed.
___Basis for applicant*s administrative authority addressed.
___Applicant's Method/System to collect, track, manage, report, and utilize data on the project's progress and performance addressed.
___Ability to collect and submit SPIR data indicated.
___Benchmarks to indicate planned implementation schedule included.
___Method to obtain feedback from participants and employers discussed.
___Grievance procedure addressed.
___Past experience in managing grant funded projects discussed.
___Project's sustainability addressed.

[FR Doc. 99–7831 Filed 3–31–99; 8:45 am]
BILLING CODE 4510–30–C

NUCLEAR REGULATORY COMMISSION

[Docket No. 50–440]

FirstEnergy Nuclear Operating Company (Perry Nuclear Power Plant, Unit 1); Exemption

I

The FirstEnergy Nuclear Operating Company (FENOC, the licensee) is the holder of Facility Operating License No. NPF–58, which authorizes operation of the Perry Nuclear Power Plant, Unit 1. The operating license states, among other things, that the licensee is subject to all rules, regulations, and orders of the U.S. Nuclear Regulatory Commission (the Commission) now or hereafter in effect.

The Perry Nuclear Power Plant is a boiling-water reactor facility located at the licensee's site in Lake County, Ohio.

II

By letter dated December 3, 1998, FENOC submitted an exemption request to the control room dose acceptance criteria of 10 CFR part 50, Appendix A, General Design Criterion (GDC) 19. The exemption request would permit use of a total effective dose equivalent (TEDE) acceptance criterion of 5-rem in place of the ''5 rem whole body, or its equivalent to any part of the body'' dose acceptance criterion that is currently specified in GDC 19.

The NRC has established control room dose acceptance criteria in 10 CFR part 50, Appendix A, GDC 19, for all light-water power reactors. GDC 19 requires, in part, that ''Adequate radiation protection shall be provided to permit access and occupancy of the control room under accident conditions without personnel receiving radiation exposures in excess of 5 rem whole body, or its equivalent to any part of the body, for the duration of the accident.'' As described in SECY–96–242, ''Use of the NUREG–1465 Source Term at Operating Reactors,'' the staff informed the Commission of its approach to allow the use of the revised accident source term described in NUREG–1465, ''Accident Source Terms for Light-Water Nuclear Power Plants,'' at operating plants. In the SECY paper, the staff described its plans to review plant applications implementing this source term and indicated that the TEDE methodology would be incorporated in these reviews. The Commission approved these plans and directed the staff to commence rulemaking and requested the use of the TEDE methodology in the implementation of the revised accident source term. The TEDE guidelines, which are needed to support revised accident source term applications, are not currently provided in regulations governing operating reactors.

Pursuant to 10 CFR 50.12, the Commission may, upon application by any interested person or upon its own initiative, grant exemptions from the requirements of 10 CFR part 50 when (1) the exemptions are authorized by law, will not present an undue risk to public health or safety, and are consistent with the common defense and security, and (2) when special circumstances are present. Special circumstances are present whenever, according to 10 CFR 50.12(a)(2)(ii), ''Application of the regulation in the particular circumstances would not serve the underlying purpose of the rule or is not necessary to achieve the underlying purpose of the rule.'' The NRC staff examined the licensee's rationale to support the exemption request and concluded that the use of the TEDE acceptance criteria for the control room would meet the underlying intent of the regulations. The licensee's request for the exemption under the special circumstances of 10 CFR 50.12(a)(2)(ii) was found to be appropriate. Application of the control room dose acceptance criteria of GDC 19 is not necessary to achieve the underlying purpose of the rule because, as stated in the staff safety evaluation, dated March 26, 1999, the staff considers the TEDE methodology as an acceptable means of meeting the current regulatory requirement. Therefore, the staff has concluded that an exemption to the requirements of 10 CFR part 50, Appendix A, GDC 19, should be granted to allow FENOC to adopt the TEDE methodology for the purpose of implementing the revised accident source term of NUREG–1465.

IV

Accordingly, the Commission has determined that, pursuant to 10 CFR 50.12(a), an exemption is authorized by law, will not endanger life or property or common defense and security, and is otherwise in the public interest. Therefore, the Commission hereby grants an exemption from the requirements of 10 CFR part 50, Appendix A, GDC 19 to allow FENOC to adopt the TEDE methodology for the purpose of implementing the revised accident source term of NUREG–1465.

Pursuant to 10 CFR 51.32, the Commission has determined that the granting of this exemption will not have a significant effect on the quality of the human environment (64 FR 4906).

This exemption is effective upon issuance.

Dated at Rockville, Maryland, this 26th day of March 1999.

For the Nuclear Regulatory Commission.

Samuel J. Collins,

Director, Office of Nuclear Reactor Regulation.

[FR Doc. 99–8027 Filed 3–31–99; 8:45 am]

BILLING CODE 7590–01–P

NUCLEAR REGULATORY COMMISSION

[Docket No. 70–3073; License No. SNM–1999]

Kerr-McGee Corporation—Environmental Assessment, Finding of No Significant Impact, and Notice of Opportunity for Hearing—Release of Portion of Cushing Refinery Site for Unrestricted Use

The U.S. Nuclear Regulatory Commission (NRC) is considering the Kerr-McGee Corporation's (Kerr-McGee or the licensee) request to have property released, for unrestricted use, from the Cushing Refinery Site (Cushing) License SNM–1999. This action is taken in response to Kerr-McGee's license amendment requests, dated August 30, 1996, and October 24, 1996, to release the four unaffected areas and the haul road corridor area for unrestricted use and to remove the areas from the license. These earlier requests were revised by the licensee's letter dated November 6, 1998. In that letter, the licensee requested that only Unaffected Area 1, the portion of Unaffected Area 2 south of Skull Creek, Unaffected Area 3, Unaffected area 4, and the portion of the haul road corridor area south of Skull Creek and partially surrounded by Unaffected Areas 2, 3, and 4 (hereafter referred to as requested released areas (RRA)) be released for unrestricted use. The boundaries of the licensed areas excluding the RRA are shown in Figure 1, ''Cushing Site Map Showing Licensed Site Area,'' of the November 6, 1998, letter.

Introduction

On April 6, 1993, NRC issued Materials License SNM–1999 authorizing possession of contaminated soil, sludge, sediment, trash, building rubble, and any other contaminated material, at the licensee's Cushing site. The site contains four large areas, designated as the four unaffected areas, that were used for oil refining and storage during the years that nuclear processing and disposal took place. The haul road corridor area is located on portions of the site that were used for petroleum refining during the years that nuclear material processing was

performed. The haul roads located within the haul road corridor area are intended for transporting waste material during site remediation.

The licensee initially requested that the four unaffected areas and the haul road corridor be removed from the license and released for unrestricted use. The licensee revised its earlier requests to limit the areas to be removed from the license and released for unrestricted use to the RRA.

Proposed Action

The proposed action is the release for unrestricted use, and the removal from License SNM–1999, the RRA. The proposed boundary of the licensed areas excluding the RRA is shown in the licensee's letter dated November 6, 1998, Figure 1, ''Cushing Site Map Showing Licensed Site Area.''

The Need for Proposed Action

The licensee seeks to release property that is currently under license for unrestricted use. This action is requested to remove the current limitations on the future use of the property.

Alternatives to Proposed Action

The only alternative to the proposed action is to not release this area for unrestricted use and keep the area under license until all site radiological remediation is completed and the Cushing license is terminated. The environmental benefit of maintaining an NRC license for this portion of the Cushing Refinery Site is negligible, but would reduce options for future use of the property.

Environmental Justice

There are no environmental justice issues associated with this proposed action.

Environmental Impact of Proposed Action

An unaffected area, as defined in NUREG/CR–5849, ''Manual for Conducting Radiological Surveys in Support of License Termination,'' is an area not expected to contain residual radioactivity from licensed operations. The unrestricted use guidelines for enriched uranium and natural thorium are the Option 1 values in the 1981 Branch Technical Position on ''Disposal or Onsite Storage of Thorium or Uranium Wastes From Past Operations'' (46 *FR* 52061). The Option 1 guidelines are 30 picoCuries per gram (pCi/g) for enriched uranium and 10 pCi/g for natural thorium.

The licensee performed final status surveys in the four unaffected areas and submitted the results to NRC in the ''Final Radiation Survey of Four Unaffected Areas of the Cushing Refinery Site,'' dated April 17, 1995. Gamma radiation scans, gamma exposure rate measurements, soil radioactivity concentration measurements, and surface radioactivity survey were performed in each of the four unaffected areas. As a result of the surveys and analysis, one area of about one meter in diameter on the surface of the ground was found to be contaminated with Th-232. This spot was designated as a radioactive materials area and was removed from the areas that the licensee considered part of the four unaffected areas. The licensee's survey report provided data that indicated that the four unaffected areas meet NRC's guidelines for unrestricted use.

The licensee performed final status surveys in the haul road corridor area and submitted the results to NRC in the ''Final Radiation Survey of Haul Road Corridor,'' dated May 30, 1996. The results of the exposure rate surveys of the haul road corridor area indicated that no location was more than 10 micoRoentgen per hour (μR/hr) above background. Gamma scans located areas of elevated activity. Biased soil samples were collected from these areas and analyzed using gamma spectroscopy. As a result of the analysis, two areas were designated as radioactive materials areas and were removed from the areas that the licensee considered part of the haul road corridor area. This licensee survey report provided data that indicated that the haul road corridor area meets NRC's guidelines for unrestricted use.

At the request of NRC, its contractor, the Oak Ridge Institute for Science and Education (ORISE), performed a confirmatory survey of the four unaffected areas during the period of September 11 through 13, 1995, and a confirmatory survey of the haul road corridor area during the period of August 26 through 29, 1996. The results of the ORISE confirmatory surveys were provided to NRC in ''Confirmatory Survey for the Four Unaffected Areas of the Cushing Refinery Site,'' dated May 1996, and ''Confirmatory Survey for the Haul Road Corridor at the Oklahoma Refinery Site,'' dated December 1996.

For both the four unaffected areas and the haul road corridor area, ORISE performed scan surveys of 50 to 100 percent of the surface area of each selected survey unit. ORISE also performed exposure rate measurements for at least five systematic locations within each survey unit. In addition, ORISE collected 20 soil samples from the four unaffected areas, and collected more than 60 surface soil samples and three subsurface soil samples from the haul road corridor area.

Concentrations of radionuclides in the soil samples from the four unaffected areas survey units are as follows: less than 0.1 to 0.5 pCi/g for U-235; 0.3 to 3.0 pCi/g for U-238; 0.6 to 9.0 pCi/g for Th-228; and less than 0.8 to 10.0 pCi/g for Th-232. One small area of thorium, in excess of the guidelines (9.0 pCi/g of Th-228 and 10.0 pCi/g of Th-232), is in unaffected area number 2. This area of elevated thorium levels, surveyed by ORISE, is the same area that the licensee designated as a radioactive materials area (about 400 m^2) after it performed its final radiation survey. Thus, this small radioactive materials area is not part of the licensee's request for unrestricted release. Of the areas that ORISE surveyed that were part of the licensee's request for unrestricted release, the concentrations of radionuclides in the soil samples are as follows: 0.6 to 3.8 pCi/g for Th-228; and less than 0.8 to 3.0 pCi/g for Th-232. The soil samples are within the Option 1 soil guideline for enriched uranium and natural thorium. Further, the portion of the haul road corridor that is being considered for release from the license would service only equipment transportation, at most, Option 1 material.

Concentrations of radionuclides in the soil samples from the haul road corridor area survey units are as follows: less than 0.8 pCi/g for U-235; less than 2.9 pCi/g for U-238; 0.5 to 2.9 pCi/g for Th-228; and less than 0.4 to 2.8 pCi/g for Th-232. For comparison purposes, radionuclide concentrations in background soil samples are as follows: less than 0.1 pCi/g for U-235; 1.0 to 1.6 pCi/g for U-238; 0.5 to 1.0 pCi/g for Th-228; and 0.6 to 0.9 pCi/g for Th-232. The soil samples yielded results indicating only background or slightly above background concentrations of uranium and thorium. The soil samples are within the Option 1 soil guideline for enriched uranium and natural thorium.

NRC considered the potential for contamination of areas within the haul road corridor once NRC authorized the licensee to conduct activities within the haul road corridor without implementation of the Cushing Radiation Safety procedures related to training.[1] The staff agreed with the licensee that the Cushing Radiation Safety Program which requires all material and equipment be surveyed before leaving a ''radioactive materials area'' would provide reasonable assurance that the haul road corridor

[1] Letter to Stuart [sic] Brown, NRC, from Jeff Lux, Kerr McGee Corporation, dated August 30, 1996.

area would not become contaminated as a result of decommissioning activity.[2]

Groundwater under the Cushing site can be found in one of three water-bearing zones. The water-bearing zones are the shallow water-bearing zone (unconsolidated soil and the upper portion of the Vanoss Group), the lower portion of the Vanoss Group, and Vamoosa-Ada aquifer. The Vamoosa-Ada aquifer is the regional groundwater aquifer. The licensee notes that it appears that there is not a significant groundwater flow between the shallow water-bearing zone and the lower portion of the Vanoss Group. Further, the licensee notes that the Vamoosa-Ada aquifer is isolated from the uppermost water-bearing zone by low-permeability strata within the Vanoss. Thus, the Vamoosa-Ada aquifer is unaffected by surface activities. The licensee based this finding on an evaluation of environmental tritium.

The State of Oklahoma, Department of Environmental Quality (DEQ)[3] found the following: (1) The shallow groundwater unit yields low quantities of poor quality water; (2) it is highly unlikely that future residential or commercial drinking water wells will be established from the shallow groundwater at this site; and (3) no known drinking water wells are screened in the Vanoss within a one-mile radius of the site. Further, DEQ stated that the Vanoss should not be considered a viable drinking water source for the area and that DEQ would consider water quality standards other than maximum contamination levels as set by the U.S. Environmental Protection Agency (EPA) as appropriate for the shallow groundwater at this site. Further, based on EPA's guidance[4] the Vanoss groundwater would be classified as a Class III—Groundwater Not a Potential Source of Drinking Water and of Limited Beneficial Use.

The staff has reviewed the site potentiometeric surface map of the upper zone[5] and found that all portions of the RRA are up-gradient of any known significant sources of contamination. Accordingly, it is very unlikely that the groundwater in these areas could have been contaminated. The assumption is supported by the results of the licensee's groundwater monitoring of several wells located either in the four unaffected areas or just down-gradient of these areas. The licensee provided these sampling results in its letter dated November 6, 1998. Based on its review of that data, the staff found no indication of groundwater contamination.

The Other Industrial Waste (OIW) disposal cell is located within the RRA. Material from the remediation of Waste Acid Sludge Pit 4 (Pit 4) that meets NRC's Option 1 criteria for unrestricted release will be disposed of in the OIW. NRC reviewed this disposal activity as part of its review of the Pit 4 remediation plan. On September 3, 1998, NRC approved the Pit 4 remediation plan, License Amendment No. 8.

Finally, a ditch in site grid blocks 132, 133, and 140 was filled with rubble from refinery demolition. Also, placed into this ditch were concrete blocks from the thorium processing building slab. The licensee in its letter dated November 13, 1998, provided the final survey data of these concrete slab blocks. Based on its review of these data NRC found that the concrete slab blocks met NRC's criteria for unrestricted release.[6]

ORISE's confirmatory survey results support the licensee's position that the four unaffected areas and the haul road corridor area meet NRC's unrestricted use criteria. Further, the licensee's groundwater monitoring sampling program results demonstrate that the groundwater under the RRA is not contaminated. Therefore, NRC finds that because the NRC's unrestricted release criteria have been met for these areas, there is no significant impact on the environment, and this portion of the property can be released for unrestricted use.

Other Agencies or Persons Consulted

This environmental assessment was prepared entirely by NRC. No other sources were used beyond those referenced in this environmental assessment. NRC provided a draft of this environmental assessment to DEQ for review. DEQ had no comments or suggestions on this environmental assessment.[7]

Conclusions

NRC finds that because the Commission's unrestricted release criteria have been met, there is no significant impact on the environment, and the property can be released for unrestricted use.

Finding of No Significant Impact

The Commission has prepared an Environmental Assessment related to the proposed unrestricted release, and removal from License SNM–1999, of the RRA on the Cushing Refinery Site, in Cushing Oklahoma. On the basis of the Environmental Assessment, the Commission has concluded that this licensing action would not significantly effect the quality of human environment and has determined not to prepare an environmental impact statement for this proposed action.

The above documents related to this proposed action are available for public inspection and copying, at the Commission's Public Document Room in the Gelman Building, 2120 L Street NW, Washington, DC.

Opportunity for a Hearing

NRC hereby provides notice that this is a proceeding on an application for a license amendment within the scope of Subpart L, Informal Hearing Procedures for Adjudication in Materials Licensing Proceedings, of NRC's rules and practice for licensing proceedings, of NRC's rules and practice for domestic licensing proceedings in 10 Code of Federal Regulations (CFR) part 2. Pursuant to § 2.1205(a), any person whose interest may be affected by this proceeding may file a request for a hearing in accordance with § 2.1205(d). A request for a hearing must be filed within thirty (30) days of the date of publication of this **Federal Register** notice.

The request for a hearing must be filed with the Office of the Secretary either:

1. By delivery to Docketing and Service Branch of the Office of the Secretary at One White Flint North, 11555 Rockville Pike, Rockville, MD 20852–2738; or

2. By mail or telegram addressed to the Secretary, U.S. Nuclear Regulatory Commission, Washington, DC 20555. Attention: Docketing and Service Branch.

In addition to meeting other applicable requirements of 10 CFR Part 2 of the NRC's regulations, a request for a hearing by a person other than an applicant must describe in detail:

The interest of the requestor in the proceeding:

1. How that interest may be affected by the results of the proceeding,

[2] Letter to Jeff Lux, Kerr McGee Corporation, from Stewart Brown, NRC, dated October 22, 1996.

[3] Letter to Jeff Lux, Kerr McGee Corporation, from Darrell Shults, DEQ, dated September 19, 1997.

[4] ''Guidelines for Ground-Water Classification Under the EPA Ground-Water Protection Strategy,'' Final Draft, dated November 1986, Office of Water, EPA.

[5] Figure 2.5, ''Potentiometeric Surface Map of the Upper Zone,'' Kerr-McGee Corporation's Site Decommissioning Plan Cushing, Oklahoma, dated August 1998.

[6] U.S. Nuclear Regulatory Commission, ''Guidelines for Decontamination of Facilities and Equipment Prior to Release for Unrestricted Use or Termination of License for Byproduct, Source, or Special Nuclear Material,'' dated August 1987.

[7] Letter to Stewart Brown, NRC, from H. A. Caves, DEQ, dated March 2, 1999.

including the reasons why the requestor should be permitted a hearing with particular reference to factors set out in § 2.1205(h);

2. The requestor's areas of concern about the licensing activity that is the subject matter of the proceeding; and

3. The circumstances establishing that the request for a hearing is timely in accordance with § 2.1205(d).

In accordance with 10 CFR 1205(f), each request for a hearing must also be served, by delivering it personally or by mail, to:

1. The applicant, Kerr-McGee Corporation, Kerr-McGee Center, P.O. Box 25861, Oklahoma City, OK 73125, Attention: Mr. Jeff Lux, and

2. The NRC staff, by delivery to the Executive Director for Operations, One White Flint North, 11555 Rockville Pike, Rockville, MD 20852, or by mail, addressed to the Executive Director for Operations, U.S. Nuclear Regulatory Commission, Washington, DC 20555.

Dated at Rockville, Maryland, this 26th day of March 1999.

For the U.S. Nuclear Regulatory Commission.

John W.N. Hickey,

Chief, Low-Level Waste and Decommissioning Projects Branch, Division of Waste Management, Office of Nuclear Material Safety and Safeguards.

[FR Doc. 99–8028 Filed 3–31–99; 8:45 am]

BILLING CODE 7590–01–P

NUCLEAR REGULATORY COMMISSION

Advisory Committee on Reactor Safeguards; Meeting Notice

In accordance with the purposes of Sections 29 and 182b. of the Atomic Energy Act (42 U.S.C. 2039, 2232b), the Advisory Committee on Reactor Safeguards will hold a meeting on April 7–10, 1999, in Conference Room T–2B3, 11545 Rockville Pike, Rockville, Maryland. The date of this meeting was previously published in the **Federal Register** on Wednesday, November 18, 1998 (63 FR 64105).

Wednesday, April 7, 1999

1:00 p.m.–1:15 p.m.: Opening Remarks by the ACRS Chairman (Open)—The ACRS Chairman will make opening remarks regarding the conduct of the meeting.

1:15 p.m.–2:45 p.m.: Draft Commission Paper on Proposed Improvements to the Generic Communications Process (Open)—The Committee will hear presentations by and hold discussions with representatives of the NRC staff regarding the draft Commission Paper on proposed improvements to the Generic Communications Process.

3:00 p.m.–4:30 p.m.: Steam Generator Tube and Reactor Pressure Vessel Integrity Issues (Open)—The Committee will hear presentations by and hold discussions with representatives of the NRC staff regarding the status of ongoing regulatory activities associated with steam generator tube integrity; the staff's draft safety evaluation of Boiling Water Reactor Vessel and Internals Project-14 (BWRVIP–14), ''Evaluation of Crack Growth in BWR Stainless Steel Reactor Pressure Vessel Internals;'' suggested changes to 10 CFR 50.61, pressurized thermal shock rule; and related matters.

4:45 p.m.–7:15 p.m.: Preparation of ACRS Reports and the ACRS Bylaws (Open)—The Committee will discuss proposed ACRS reports, including a proposed report on the NRC Safety Research Program. Also, the Committee will discuss proposed revisions to the ACRS Bylaws.

Thursday, April 8, 1999

8:30 a.m.–8:35 a.m.: Opening Remarks by the ACRS Chairman (Open)—The ACRS Chairman will make opening remarks regarding the conduct of the meeting.

8:35 a.m.–10:00 a.m.: Insights Gained from the Risk-Informed Pilot Applications (Open)—The Committee will hear presentations by and hold discussions with representatives of the NRC staff and the Nuclear Energy Institute (NEI) regarding the insights gained from the risk-informed pilot applications, including those from the pilots for inservice inspection, extension of allowed outage times, and online maintenance.

10:15 a.m.–11:45 a.m.: Proposed Final Revision to 10 CFR 50.65(a) of the Maintenance Rule and an Associated Draft Regulatory Guide (Open)—The Committee will hear presentations by and hold discussions with representatives of the NRC staff and NEI regarding the proposed final revision to 10 CFR 50.65(a) of the Maintenance Rule that would require licensees to perform safety assessments prior to performing maintenance activities, and an associated draft Regulatory Guide.

12:45 p.m.–2:15 p.m.: Proposed Approach for Revising the Commission's Safety Goal Policy Statement (Open)—The Committee will hear presentations by and hold discussions with representatives of the NRC staff regarding the staff's proposed approach for revising the Commission's Safety Goal Policy Statement.

2:30 p.m.–6:15 p.m.: Preparation of ACRS Reports (Open)—The Committee will discuss proposed ACRS reports.

Friday, April 9, 1999

8:30 a.m.–8:35 a.m.: Opening Remarks by the ACRS Chairman (Open)—The ACRS Chairman will make opening remarks regarding the conduct of the meeting.

8:35 a.m.–10:00 a.m.: Preparation of ACRS Reports (Open)—The Committee will continue its discussion of proposed ACRS reports.

10:00 a.m.–10:30 a.m.: Subcommittee Report (Open)—The Committee will hear a report by the Chairman of the Thermal-Hydraulic Phenomena Subcommittee regarding matters discussed during the March 23, 1999 meeting.

10:45 a.m.–11:45 a.m.: Impact of the Use of High Burnup or Mixed Oxide Fuel on the Revised Source Term (Open)—The Committee will discuss the proposed ACRS response to a Commission request, included in the March 5, 1999 Staff Requirements Memorandum (SRM), that the ACRS consider the impact of the use of high burnup or mixed oxide fuel on the revised source term.

1:00 p.m.—2:00 p.m.: Relationship and Balance Between PRA Results and Defense-In-Depth (Open)—The Committee will discuss the proposed response to a Commission request, included in the March 5, 1999 SRM, that the ACRS consider the appropriate relationship and balance between PRA results and defense-in-depth in the context of risk-informed regulation.

2:00 p.m.—2:15 p.m.: Reconciliation of ACRS Comments and Recommendations (Open)—The Committee will discuss the responses from the NRC Executive Director for Operations (EDO) to comments and recommendations included in recent ACRS reports and letters. The EDO responses are expected to be provided to the ACRS prior to the meeting.

2:15 p.m.—3:00 p.m.: Report of the Planning and Procedures Subcommittee (Open/Closed)—The Committee will hear a report of the Planning and Procedures Subcommittee on matters related to the conduct of ACRS business, and organizational and personnel matters relating to the ACRS. [Note: A portion of this session may be closed to discuss organizational and personnel matters that relate solely to the internal personnel rules and practices

of this Advisory Committee, and information the release of which would constitute a clearly unwarranted invasion of personal privacy.]

3:15 p.m.—4:00 p.m.: Future ACRS Activities (Open)—The Committee will discuss the recommendations of the Planning and Procedures Subcommittee regarding items proposed for consideration by the full Committee during future meetings.

4:00 p.m.—7:00 p.m.: Preparation of ACRS Reports (Open)—The Committee will continue its discussion of proposed ACRS reports.

Saturday, April 10, 1999

8:30 a.m.–2:00 p.m.: Preparation of ACRS Reports (Open)—The Committee will continue its discussion of proposed ACRS reports.

2:00 p.m.—2:30 p.m.: Miscellaneous (Open)—The Committee will discuss matters related to the conduct of Committee activities and matters and specific issues that were not completed during previous meetings, as time and availability of information permit.

Procedures for the conduct of and participation in ACRS meetings were published in the **Federal Register** on September 29, 1998 (63 FR 51968). In accordance with these procedures, oral or written views may be presented by members of the public, including representatives of the nuclear industry. Electronic recordings will be permitted only during the open portions of the meeting and questions may be asked only by members of the Committee, its consultants, and staff. Persons desiring to make oral statements should notify Dr. Richard P. Savio, Associate Director for Technical Support, five days before the meeting, if possible, so that appropriate arrangements can be made to allow necessary time during the meeting for such statements. Use of still, motion picture, and television cameras during this meeting may be limited to selected portions of the meeting as determined by the Chairman. Information regarding the time to be set aside for this purpose may be obtained by contacting the Associate Director for Technical Support prior to the meeting. In view of the possibility that the schedule for ACRS meetings may be adjusted by the Chairman as necessary to facilitate the conduct of the meeting, persons planning to attend should check with the Associate Director for Technical Support if such rescheduling would result in major inconvenience.

In accordance with Subsection 10(d) Pub. L. 92–463, I have determined that it is necessary to close portions of this meeting noted above to discuss matters that relate solely to the internal personnel rules and practices of this Advisory Committee per 5 U.S.C. 552b(c)(2), to discuss information provided in confidence by a foreign source per 5 U.S.C. 552b(c(4), and to discuss information the release of which would constitute a clearly unwarranted invasion of personal privacy per 5 U.S.C. 552b(c)(6).

Further information regarding topics to be discussed, whether the meeting has been canceled or rescheduled, the Chairman's ruling on requests for the opportunity to present oral statements and the time allotted therefor, can be obtained by contacting Dr. Richard P. Savio, Associate Director for Technical Support (telephone 301/415–7363), between 7:30 a.m. and 4:15 p.m. EST.

ACRS meeting agenda, meeting transcripts, and letter reports are available for downloading or viewing on the internet at http://www.nrc.gov/ACRSACNW.

Videoteleconferencing service is available for observing open sessions of ACRS meetings. Those wishing to use this service for observing ACRS meetings should contact Mr. Theron Brown, ACRS Audio Visual Technician (301–415–8066), between 7:30 a.m. and 3:45 p.m. EST at least 10 days before the meeting to ensure the availability of this service. Individuals or organizations requesting this service will be responsible for telephone line charges and for providing the equipment facilities that they use to establish the videoteleconferencing link. The availability of videoteleconferencing services is not guaranteed.

Dated: March 25, 1999.

Andrew L. Bates,

Advisory Committee Management Officer.

[FR Doc. 99–7844 Filed 3–31–99; 8:45 am]

BILLING CODE 7590–01–P

NUCLEAR REGULATORY COMMISSION

[Docket No. 50–271]

Vermont Yankee Nuclear Power Corporation; Correction Notice

On February 25, 1999, the NRC published (64 FR 9360) ''issuance of Director's Decision Under 10 CFR 2.206.'' The text of the actual Director's Decision should have followed the notice but did not. The text of ''Director's Decision Pursuant to 10 CFR 2.206'' (DD–99–04) follows this notice.

Dated at Rockville, Maryland this 25th day of March 1999.

For the Nuclear Regulatory Commission.

Elinor G. Adensam,

Director, Project Directorate 1–2, Division of Licensing Project Management Office of Nuclear Reactor Regulation.

Office of Nuclear Reactor Regulation, Samuel J. Collins, Director

In the Matter of Vermont Yankee Nuclear Power Corporation (Vermont Yankee Nuclear Power Station)

Docket No. 50–271

License No. DPR–28

(10 CFR 2.206)

Director's Decision Pursuant to 10 CFR 2.206

I. Introduction

By a Petition submitted pursuant to 10 CFR 2.206 on April 9, 1998, Michael J. Daley, on behalf of the New England Coalition on Nuclear Pollution, Inc., (Petitioner), requested that the U.S. Nuclear Regulatory Commission (NRC) take immediate action with regard to the Vermont Yankee Nuclear Power Station (VYNPS) operated by the Vermont Yankee Nuclear Power Corporation (licensee or Vermont Yankee).

The Petitioner requested that the NRC issue an order requiring that the licensee's administrative limits, which were in effect at the time and precluded VYNPS from operating with a torus water temperature above 80 °F or with a service water injection temperature greater than 50 °F, shall remain in force until certain conditions are met. The conditions listed include a complete reconstitution of the licensing basis for the maximum torus water temperature, submittal to the NRC of a technical specifications (TSs) amendment request establishing the correct maximum torus water temperature, and completion of NRC's review of the amendment request.

On May 13, 1998, the Director of the Office of Nuclear Reactor Regulation informed the Petitioner that he was denying the request for immediate action at VNYPS, that the Petition was being evaluated under 10 CFR 2.206 of the Commission's regulations, and that action would be taken in a reasonable time.

The NRC staff's review of the Petition is now complete. For the reasons set forth below, the Petitioner's remaining requests have been approximately addressed. The conditions associated with the Petitioner's request have been completed, including establishment of the correct licensing basis for the maximum torus temperature, submittal of a TS amendment request establishing the correct maximum torus water temperature limit, and completion of the NRC's review of the amendment request.

II. Background

In support of these requests, the Petitioner raised concerns about the licensee being unable to demonstrate an ability to either justify the operational limits for the maximum torus water temperature or to maintain operations within existing administrative limits (torus water temperature is critical to the proper functioning of the containment). The Petitioner asserted that since 1994, events have caused the licensee to question VYNPS's maximum torus water temperature limits four times, leading to the self-imposed administrative limits previously noted. The Petitioner stated that the NRC must move from a ''wait and see'' posture to active intervention, with immediate imposition of the order recommended by the Petitioner as a first step.

The staff notes that the limits proposed by the Petitioner were in effect at VYNPS on an interim basis while the licensee determined the correct maximum torus water temperature limits since it was determined that the TS limit of 100 °F was incorrect. The licensee subsequently completed the analysis and determined that the correct limit for the maximum torus water temperature is 90 °F. This administrative limit was then established at 90 °F and a TS amendment request was submitted to establish this as the maximum torus water temperature.

III. Discussion

As indicated in the May 13 letter, Petitioner's request for immediate action was denied. Although the NRC identified concerns regarding the licensee's handling of the torus water temperature issue in the past, as evidenced by the NRC's enforcement action (Notice of Violation and Proposed Imposition of Civil Penalty of $55,000 dated April 14, 1998), there was insufficient basis for concluding that the limits proposed by the Petitioner must be imposed on the licensee while the NRC reviewed the associated TS amendment request. The NRC took several actions in this area, including performing a design inspection and conducting several meetings with the licensee on this issue. The NRC concluded that the licensee's actions to resolve this issue were acceptable.

In May and June 1997, the NRC performed a design inspection to evaluate the capability of selected systems to perform their intended safety function as described in design-basis documentation. Also, the NRC assessed the licensee's adherence to its design and licensing basis for selected systems, and the consistency of the as-built configuration and system operations with the final safety analysis report. The team concluded that although some concerns were identified, the systems evaluated were capable of performing their intended functions and the design engineers had excellent knowledge and capabilities. The report findings were documented in NRC Inspection Report Number 50–271/97–201, which was provided with our May 13 letter to the Petitioner.

One of the concerns identified during the inspection was associated with the licensee's previous handling of the torus water temperature issue and resulted in enforcement action being taken on April 14, 1998, because of a failure to (1) properly translate the design basis of the plant into specifications, procedures, and instructions and (2) promptly correct design deficiencies once they were identified. However, credit was warranted for corrective actions because NRC considered the licensee's actions, once the violations were identified, to be prompt and comprehensive.

At the NRC's request, several public meetings were conducted to discuss issues, including the licensee's analysis to determine the appropriate torus water temperature limit. As a result of discussions with the licensee during public meetings on March 5, March 24, and April 7, 1998, the NRC concluded that the licensee was taking the appropriate actions to resolve this issue and to ensure that the appropriate maximum torus water temperature was specified in the TS and administratively controlled while the TS amendment was being reviewed by the NRC. During the April 7 meeting, the licensee committed to submit the TS amendment request to limit the torus water temperature to 90 °F, which is an input value to the containment analysis calculations, before restart. The calculations supporting the amendment request were subjected to the licensee's formal quality process for assuring accuracy and completeness and provided additional assurance that the 90 °F limit is correct. The more restrictive administrative limits (80 °F torus water temperature and 50 °F service water injection water temperature) were put in place by the licensee, while the detailed analysis was performed to verify that 90 °F was the correct limit.

The licensee proposed a TS amendment to establish a maximum torus water temperature limit of 90 °F by letter dated May 8, 1998, as supplemented on July 10 and October 2, 1998. The NRC reviewed the licensee's analysis and concluded, for the reasons specified in the safety evaluation, that the appropriate maximum torus water temperature is 90 °F. Therefore, imposition of the more restrictive administrative limits specified in the Petition are not necessary.

IV. Conclusion

The NRC staff has evaluated the information provided by the Petitioner as its basis for the actions requested. As indicated in the May 13 letter to the Petitioner, the NRC has concluded that issuing an immediate order, as requested, was unnecessary since the licensee took appropriate actions to determine the proper limit on torus water temperature, sought a TS amendment to impose the correct torus water temperature, and administratively implemented the limit while the NRC reviewed the analysis in support of the TS amendment. Although the NRC denied Petitioner's request to take immediate action to issue an order imposing certain limits on VYNPS, the conditions associated with the request have been completed, including establishment of the correct licensing basis for the maximum torus temperature, submittal of a TS amendment request establishing the correct maximum torus water temperature limit, and completion of the NRC's review of the amendment request.

Since the conditions listed in the Petition have been met and the NRC had previously addressed Petitioner's immediate request for imposition of an order, all actions associated with the request are complete. For the reasons contained in the safety evaluation, we have concluded that the appropriate limit for maximum torus water temperature is 90°F, making the limits requested in the Petition unnecessary. Accordingly, the staff has addressed the issues raised by the Petitioner and has completed its actions relating to the Petition.

As provided in 10 CFR 2.206(c), a copy of this Decision will be filed with the Secretary of the Commission for the Commission's review. This Decision will constitute the final action of the Commission 25 days after issuance unless the Commission, on its own motion, institutes review of the Decision within that time.

Dated at Rockville, Maryland, this 10th day of February 1999.

For the Nuclear Regulatory Commission.

Samuel J. Collins,

Director, Office of Nuclear Reactor Regulation.

[FR Doc. 99–8029 Filed 3–31–99; 8:45 am]

BILLING CODE 7590–01–M

NUCLEAR REGULATORY COMMISSION

State of Ohio: NRC Staff Assessment of a Proposed Agreement Between the Nuclear Regulatory Commission and the State of Ohio

AGENCY: Nuclear Regulatory Commission.

ACTION: Notice of a proposed Agreement with the State of Ohio.

SUMMARY: By letter dated June 22, 1998, former Governor George V. Voinovich of Ohio requested that the U. S. Nuclear Regulatory Commission (NRC) enter into an Agreement with the State as authorized by Section 274 of the Atomic Energy Act of 1954, as amended (Act). Under the proposed Agreement, the Commission would give up, and Ohio would take over, portions of the Commission's regulatory authority exercised within the State. As required by the Act, NRC is publishing the proposed Agreement for public comment. NRC is also publishing the summary of an assessment by the NRC staff of the Ohio regulatory program. Comments are requested on the proposed Agreement, especially its effect on public health and safety. Comments are also requested on the NRC staff assessment, the adequacy of the Ohio program staff, and the State's commitments concerning the program staff, as discussed in this notice.

The proposed Agreement would release (exempt) persons who possess or use certain radioactive materials in Ohio from portions of the Commission's regulatory authority. The Act requires that NRC publish those exemptions. Notice is hereby given that the pertinent exemptions have been previously published in the **Federal Register** and are codified in the Commission's regulations as 10 CFR part 150.

DATES: The comment period expires April 12, 1999. Comments received after this date will be considered if it is practical to do so, but the Commission cannot assure consideration of comments received after the expiration date.

ADDRESSES: Written comments may be submitted to Mr. David L. Meyer, Chief, Rules and Directives Branch, Division of Administrative Services, Office of Administration, Washington, DC 20555–0001. Copies of comments received by NRC may be examined at the NRC Public Document Room, 2120 L Street, NW. (Lower Level), Washington, DC. Copies of the proposed Agreement, copies of the request for an Agreement by the Governor of Ohio including all information and documentation submitted in support of the request, and copies of the full text of the NRC staff assessment are also available for public inspection in the NRC's Public Document Room.

FOR FURTHER INFORMATION CONTACT: Richard L. Blanton, Office of State Programs, U.S. Nuclear Regulatory Commission, Washington, DC 20555–0001. Telephone (301) 415–2322 or e-mail rlb@nrc.gov.

SUPPLEMENTARY INFORMATION: Since Section 274 of the Act was added in 1959, the Commission has entered into Agreements with 30 States. The Agreement States currently regulate approximately 16,000 agreement material licenses, while NRC regulates approximately 5800 licenses. Under the proposed Agreement, approximately 550 NRC licenses will transfer to Ohio. NRC periodically reviews the performance of the Agreement States to assure compliance with the provisions of Section 274.

Section 274e requires that the terms of the proposed Agreement be published in the **Federal Register** for public comment once each week for four consecutive weeks. This notice is being published in fulfillment of the requirement.

I. Background

(a) Section 274d of the Act provides the mechanism for a State to assume regulatory authority, from the NRC, over certain radioactive materials [1] and activities that involve use of the materials. In a letter dated June 22, 1998, Governor Voinovich certified that the State of Ohio has a program for the control of radiation hazards that is adequate to protect public health and safety within Ohio for the materials and activities specified in the proposed Agreement, and that the State desires to assume regulatory responsibility for these materials and activities. Included with the letter was the text of the proposed Agreement, which is shown in Appendix A to this notice.

The radioactive materials and activities (which together are usually referred to as the ''categories of materials'') which the State of Ohio requests authority over are: (1) the possession and use of byproduct materials as defined in Section 11e.(1) of the Act; (2) the generation, possession, use, and disposal of byproduct materials as defined in Section 11e.(2) of the Act; (3) the possession and use of source materials; (4) the possession and use of special nuclear materials in quantities not sufficient to form a critical mass; (5) the regulation of the land disposal of byproduct materials as defined in Section 11e.(1) of the Act, source, or special nuclear waste materials received from other persons; and (6) the evaluation of radiation safety information on sealed sources or devices containing byproduct materials as defined in Section 11e.(1) of the Act, source, or special nuclear materials and the registration of the sealed sources or devices for distribution, as provided for in regulations or orders of the Commission.

(b) The proposed Agreement contains articles that:

—Specify the materials and activities over which authority is transferred;
—Specify the activities over which the Commission will retain regulatory authority;
—Continue the authority of the Commission to safeguard nuclear materials and restricted data;
—Commit the State of Ohio and NRC to exchange information as necessary to maintain coordinated and compatible programs;
—Provide for the reciprocal recognition of licenses;
—Provide for the suspension or termination of the Agreement;
—Provide for the transfer of any financial surety funds collected by Ohio for reclamation or long-term surveillance of sites for the disposal of byproduct materials (as defined in Section 11e.(2) of the Act) to the United States if custody of the material and the disposal site are transferred; and
—Specify the effective date of the proposed Agreement. The Commission reserves the option to modify the terms of the proposed Agreement in response to comments, to correct errors, and to make editorial changes. The final text of the Agreement, with the effective date, will be published after the Agreement is approved by the Commission, and signed by the Chairman of the Commission and the Governor of Ohio.

(c) Ohio currently regulates the users of naturally-occurring and accelerator-produced radioactive materials. The regulatory program is authorized by law in Section 3748 of the Ohio Revised Code. Subsection 3748.03 provides the authority for the Governor to enter into an Agreement with the Commission.

[1] The radioactive materials, sometimes referred to as ''agreement materials,'' are: (a) byproduct materials as defined in Section 11e.(1) of the Act; (b) byproduct materials as defined in Section 11e.(2) of the Act; (c) source materials as defined in Section 11z. of the Act; and (d) special nuclear materials as defined in Section 11aa. of the Act, restricted to quantities not sufficient to form a critical mass.

Ohio law contains provisions for the orderly transfer of regulatory authority over affected licensees from NRC to the State. After the effective date of the Agreement, licenses issued by NRC would continue in effect as Ohio licenses until the licenses expire or are replaced by State issued licenses. NRC licenses transferred to Ohio which contain requirements for decommissioning and express an intent to terminate the license when decommissioning has been completed in accordance with a Commission approved decommissioning plan will continue as Ohio licenses and will be terminated by Ohio when the Commission approved decommissioning plan has been completed.

(d) As described below, the proposed Agreement will be signed only after the fulfillment of commitments by Ohio to hire, train, and qualify a sufficient number of professional/technical staff. Contingent on the fulfilment of these commitments, the NRC staff assessment finds that the Ohio program is adequate to protect public health and safety, and is compatible with the NRC program for the regulation of agreement materials.

II. Summary of the NRC Staff Assessment of the Ohio Program for the Control of Agreement Materials

NRC staff has examined the Ohio request for an Agreement with respect to the ability of the radiation control program to regulate agreement materials. The examination was based on the Commission's policy statement ''*Criteria for Guidance of States and NRC in Discontinuance of NRC Regulatory Authority and Assumption Thereof by States Through Agreement*'' (referred to herein as the ''NRC criteria'') (46 FR 7540; January 23, 1981, as amended).

(a) *Organization and Personnel.* The agreement materials program will be located within the existing Bureau of Radiation Protection (Bureau) of the Ohio Department of Health. The program will be responsible for all regulatory activities related to the proposed Agreement.

The educational requirements for the Bureau staff members are specified in the Ohio State personnel position descriptions, and meet the NRC criteria with respect to formal education or combined education and experience requirements. All current staff members hold at least bachelor's degrees in physical or life sciences, or have a combination of education and experience at least equivalent to a bachelor's degree. Several staff members hold advanced degrees, and all staff members have had additional training plus working experience in radiation protection. Supervisory level staff have more than ten years working experience each in radiation protection.

The Bureau currently has staff vacancies, which it is actively recruiting to fill. In response to NRC comments, the Bureau performed, and NRC staff reviewed, an analysis of the expected Bureau workload under the proposed Agreement. Based on the analysis, Ohio has made three commitments. First, the Bureau will employ a staff of at least 21 full-time professional/technical employees for the agreement materials program. Second, the distribution of the qualifications of the individual staff members will be balanced to the distribution of categories of licensees transferred from NRC. For example, there will be enough inspectors trained and qualified to inspect industrial radiography operations that the program will be able to inspect all of the industrial radiography licensees transferred from NRC without developing a backlog of overdue inspections. Third, each individual on the staff will be qualified in accordance with the Bureau's training and qualification procedure (including use of interim qualification) to function in the areas of responsibility to which the individual is assigned. In the case of individuals assigned to review radiation safety information on sealed sources or devices containing byproduct materials as defined in Section 11e.(1) of the Act, source, or special nuclear materials, this commitment includes assuring that the individuals will be able to:

—Understand and interpret, if necessary, appropriate prototype tests that ensure the integrity of the products under normal, and likely accidental, conditions of use,
—Understand and interpret test results,
—Read and understand blueprints and drawings,
—Understand how the device works and how safety features operate,
—Understand and apply appropriate regulations,
—Understand the conditions of use,
—Understand external dose rates, source activities, and nuclide chemical form, and
—Understand and utilize basic knowledge of engineering materials and their properties.

(b) *Legislation and Regulations.* The Ohio Department of Health is designated by law in Chapter 3748 of the Ohio Revised Code to be the radiation control agency. The law provides the Department the authority to issue licenses, issue orders, conduct inspections, and to enforce compliance with regulations, license conditions, and orders. Licensees are required to provide access to inspectors. The Public Health Council is authorized to promulgate regulations.

The law requires the Public Health Council to adopt rules that are compatible with the equivalent NRC regulations and that are equally stringent to, or to the extent practicable more stringent than, the equivalent NRC regulations. The Council has adopted, by reference, the NRC regulations in Title 10 of the Code of Federal Regulations that were in effect on October 19, 1998. The adoption by reference is contained in Chapter 3701–39–021 of the Ohio Administrative Code (OAC). The Board of Health has extended the effect of the rules, where appropriate, to apply to naturally occurring radioactive materials and to radioactive materials produced in particle accelerators, in addition to agreement materials.

Ohio rule 3701–39–021(A) specifies that references to the NRC shall be construed as references to the Director of the Department of Health. It is noted, however, that Ohio has adopted most of the NRC regulations as entire Parts, including sections that address regulatory matters reserved to the Commission. Ohio has adopted a provision in Rule 3701–39–021(A) excepting such sections from being construed as enforced by the Director of the Department of Health. The OAC also contains a provision to avoid interference with licensees when they are complying with regulatory requirements which the Act specifies NRC must enforce and when they are complying with NRC regulatory requirements from which the State licensees have not been exempted by the proposed Agreement. The NRC staff concludes that Ohio will not attempt to enforce the regulatory matters reserved to the Commission. In accordance with NRC Management Directive 5.9, ''Adequacy and Compatibility of Agreement State Programs,'' this approach is considered compatible.

The NRC staff review verified that the Ohio rules contain all of the provisions that are necessary in order to be compatible with the regulations of the NRC on the effective date of the Agreement between the State and the Commission. The adoption of the NRC regulations by reference assures that the standards will be uniform.

The Ohio regulations are different from the NRC regulations with respect to the decommissioning of a licensed facility and the termination of the license. Current NRC regulations permit

a license to be terminated when the facility has been decommissioned, i.e., cleaned of radioactive contamination, such that the residual radiation will not cause a total effective dose equivalent greater than 25 millirem per year to an average member of the group of individuals reasonably expected to receive the greatest exposure. Normally, the NRC regulations require that the 25 millirem dose constraint be met without imposing any restrictions regarding the future use of the land or buildings of the facility (''unrestricted release''). Under certain circumstances, NRC regulations in 10 CFR part 20, Subpart E, allow a license to be terminated if the 25 millirem dose constraint is met with restrictions on the future use (''restricted release''). Ohio law does not allow a license to be terminated under restricted release. Ohio will instead issue special ''decommissioning-possession only'' licenses as an alternative to license termination under restricted release. The Commission has concluded that Ohio's approach, although different, is compatible.

(c) *Storage and Disposal.* Ohio has also adopted, by reference, the NRC requirements for the storage of radioactive material, and for the disposal of radioactive material as waste. The waste disposal requirements cover both the disposal of waste generated by the licensee and the disposal of waste generated by and received from other persons.

(d) *Transportation of Radioactive Material.* Ohio has adopted the NRC regulations in 10 CFR part 71 by reference. Part 71 contains the requirements licensees must follow when preparing packages containing radioactive material for transport. Part 71 also contains requirements related to the licensing of packaging for use in transporting radioactive materials. Ohio will not attempt to enforce portions of the regulations related to activities, such as approving packaging designs, which are reserved to NRC.

(e) *Recordkeeping and Incident Reporting.* Ohio has adopted, by reference, the sections of the NRC regulations which specify requirements for licensees to keep records, and to report incidents or accidents involving materials.

(f) *Evaluation of License Applications.* Ohio has adopted, by reference, the NRC regulations that specify the requirements which a person must meet in order to get a license to possess or use radioactive materials. Ohio has also developed a licensing procedures manual, along with the accompanying regulatory guides, which are adapted from similar NRC documents and contain guidance for the program staff when evaluating license applications.

(g) *Inspections and Enforcement.* The Ohio radiation control program has adopted a schedule providing for the inspection of licensees as frequently as, or more frequently than, the inspection schedule used by NRC. The program has adopted procedures for the conduct of inspections, the reporting of inspection findings, and the report of inspection results to the licensees. The program has also adopted, by rule in the OAC, procedures for the enforcement of regulatory requirements.

(h) *Regulatory Administration.* The Ohio Department of Health is bound by requirements specified in State law for rulemaking, issuing licenses, and taking enforcement actions. The program has also adopted administrative procedures to assure fair and impartial treatment of license applicants. Ohio law prescribes standards of ethical conduct for State employees.

(i) *Cooperation with Other Agencies.* Ohio law deems the holder of an NRC license on the effective date of the proposed Agreement to possess a like license issued by Ohio. The law provides that these former NRC licenses will expire either 90 days after receipt from the radiation control program of a notice of expiration of such license or on the date of expiration specified in the NRC license, whichever is later. In the case of NRC licenses that are terminated under restricted conditions pursuant to 10 CFR 20.1403 prior to the effective date of the proposed Agreement, Ohio deems the termination to be final despite any other provisions of State law or rule. For NRC licenses that, on the effective date of the proposed Agreement, contain a license condition indicating intent to terminate the license upon completion of a Commission approved decommissioning plan, the transferred license will be terminated by Ohio in accordance with the plan so long as the licensee conforms to the approved plan.

Ohio also provides for ''timely renewal.'' This provision affords the continuance of licenses for which an application for renewal has been filed more than 30 days prior to the date of expiration of the license. NRC licenses transferred while in timely renewal are included under the continuation provision. The OAC provides exemptions from the State's requirements for licensing of sources of radiation for NRC and U.S. Department of Energy contractors or subcontractors.

The proposed Agreement commits Ohio to use its best efforts to cooperate with the NRC and the other Agreement States in the formulation of standards and regulatory programs for the protection against hazards of radiation and to assure that Ohio's program will continue to be compatible with the Commission's program for the regulation of agreement materials. The proposed Agreement stipulates the desirability of reciprocal recognition of licenses, and commits the Commission and Ohio to use their best efforts to accord such reciprocity.

III. Staff Conclusion

Subsection 274d of the Act provides that the Commission shall enter into an agreement under subsection 274b with any State if:

(a) The Governor of the State certifies that the State has a program for the control of radiation hazards adequate to protect public health and safety with respect to the agreement materials within the State, and that the State desires to assume regulatory responsibility for the agreement materials; and

(b) The Commission finds that the State program is in accordance with the requirements of Subsection 274o, and in all other respects compatible with the Commission's program for the regulation of materials, and that the State program is adequate to protect public health and safety with respect to the materials covered by the proposed Agreement.

On the basis of its assessment, the NRC staff concludes that the State of Ohio meets the requirements of the Act, conditioned on completion of the commitments made in regard to the program staff. The State's program, as defined by its statutes, regulations, personnel, licensing, inspection, and administrative procedures, is compatible with the program of the Commission and adequate to protect public health and safety with respect to the materials covered by the proposed Agreement.

NRC will continue the formal processing of the proposed Agreement, however, the signing of the Agreement will be contingent upon the Bureau's completion of the staffing commitments.

IV. Small Business Regulatory Enforcement Fairness Act

In accordance with the Small Business Regulatory Enforcement Fairness Act of 1996, the NRC has determined that this action is not a major rule and has verified this determination with the Office of Information and Regulatory Affairs of the Office of Management and Budget (OMB).

Dated at Rockville, Maryland, this 5th day of March, 1999.

For the Nuclear Regulatory Commission.

Annette Vietti-Cook,

Secretary of the Commission.

An Agreement Between The United States Nuclear Regulatory Commission and the State of Ohio for the Discontinuance of Certain Commission Regulatory Authority and Responsibility Within the State Pursuant To Section 274 of the Atomic Energy Act of 1954, as Amended

Whereas, The United States Nuclear Regulatory Commission (hereinafter referred to as the Commission) is authorized under Section 274 of the Atomic Energy Act of 1954, as amended (hereinafter referred to as the Act), to enter into agreements with the Governor of any State providing for discontinuance of the regulatory authority of the Commission within the State under Chapters 6, 7, and 8, and Section 161 of the Act with respect to byproduct materials as defined in Sections 11e.(1) and (2) of the Act, source materials, and special nuclear materials in quantities not sufficient to form a critical mass; and

Whereas, The Governor of the State of Ohio is authorized under Chapter 3748. of the Ohio Revised Code to enter into this Agreement with the Commission; and

Whereas, The Governor of the State of Ohio certified on June 22, 1998, that the State of Ohio (hereinafter referred to as the State) has a program for the control of radiation hazards adequate to protect the health and safety of the public and to protect the environment with respect to the materials within the State covered by this Agreement, and that the State desires to assume regulatory responsibility for such materials; and

Whereas, The Commission found on (date to be determined) that the program of the State for the regulation of the materials covered by this Agreement is compatible with the Commission's program for the regulation of such materials and is adequate to protect public health and safety; and

Whereas, The State and the Commission recognize the desirability and importance of cooperation between the Commission and the State in the formulation of standards for protection against hazards of radiation and in assuring that State and Commission programs for protection against hazards of radiation will be coordinated and compatible; and

Whereas, The Commission and the State recognize the desirability of reciprocal recognition of licenses, and of the granting of limited exemptions from licensing of those materials subject to this Agreement; and

Whereas, This Agreement is entered into pursuant to the provisions of the Atomic Energy Act of 1954, as amended;

Now, Therefore, It is hereby agreed between the Commission and the Governor of the State of Ohio, acting in behalf of the State, as follows:

Article I

Subject to the exceptions provided in Articles II, IV, and V, the Commission shall discontinue, as of the effective date of this Agreement, the regulatory authority of the Commission in the State under Chapters 6, 7, and 8, and Section 161 of the Act with respect to the following materials:

1. Byproduct materials as defined in Section 11e.(1) of the Act;
2. Byproduct materials as defined in Section 11e.(2) of the Act;
3. Source materials;
4. Special nuclear materials in quantities not sufficient to form a critical mass;
5. The regulation of the land disposal of byproduct, source, or special nuclear waste materials received from other persons; and
6. The evaluation of radiation safety information on sealed sources or devices containing byproduct, source, or special nuclear materials and the registration of the sealed sources or devices for distribution, as provided for in regulations or orders of the Commission.

Article II

A. This Agreement does not provide for discontinuance of any authority and the Commission shall retain authority and responsibility with respect to:

1. The regulation of the construction and operation of any production or utilization facility or any uranium enrichment facility;
2. The regulation of the export from or import into the United States of byproduct, source, or special nuclear material, or of any production or utilization facility;
3. The regulation of the disposal into the ocean or sea of byproduct, source, or special nuclear waste materials as defined in the regulations or orders of the Commission;
4. The regulation of the disposal of such other byproduct, source, or special nuclear material as the Commission from time to time determines by regulation or order should, because of the hazards or potential hazards thereof, not be so disposed without a license from the Commission.

B. Notwithstanding this Agreement, the Commission retains the following authorities pertaining to byproduct material as defined in Section 11e.(2) of the Atomic Energy Act:

1. Prior to the termination of a State license for such byproduct material, or for any activity that results in the production of such material, the Commission shall have made a determination that all applicable standards and requirements pertaining to such material have been met.

2. The Commission reserves the authority to establish minimum standards governing reclamation, long-term surveillance or maintenance, and ownership of such byproduct material and of land used as a disposal site for such material.

Such reserved authority includes:

a. The authority to establish terms and conditions as the Commission determines necessary to assure that, prior to termination of any license for such byproduct material, or for any activity that results in the production of such material, the licensee shall comply with decontamination, decommissioning, and reclamation standards prescribed by the Commission; and with ownership requirements for such materials and its disposal site;

b. The authority to require that prior to termination of any license for such byproduct material or for any activity that results in the production of such material, title to such byproduct material and its disposal site be transferred to the United States or the State at the option of the State (provided such option is exercised prior to termination of the license);

c. The authority to permit use of the surface or subsurface estates, or both, of the land transferred to the United States or a State pursuant to paragraph 2.b. in this section in a manner consistent with the provisions of the Uranium Mill Tailings Radiation Control Act of 1978, provided that the Commission determines that such use would not endanger public health, safety, welfare, or the environment;

d. The authority to require, in the case of a license, if any, for any activity that produces such byproduct material (which license was in effect on November 8, 1981), transfer of land and material pursuant to paragraph 2.b. in this section taking into consideration the status of such material and land and interests therein, and the ability of the licensee to transfer title and custody thereof to the United States or the State;

e. The authority to require the Secretary of the Department of Energy, other Federal agency, or State, whichever has custody of such byproduct material and its disposal site, to undertake such monitoring, maintenance, and emergency measures as are necessary to protect public health

and safety, and other actions as the Commission deems necessary; and

f. The authority to enter into arrangements as may be appropriate to assure Federal long-term surveillance or maintenance of such byproduct material and its disposal site on land held in trust by the United States for any Indian Tribe or land owned by an Indian Tribe and subject to a restriction against alienation imposed by the United States.

Article III

Notwithstanding this Agreement, the Commission may from time to time by rule, regulation, or order, require that the manufacturer, processor, or producer of any equipment, device, commodity, or other product containing source, byproduct, or special nuclear material shall not transfer possession or control of such product except pursuant to a license or an exemption from licensing issued by the Commission.

Article IV

This Agreement shall not affect the authority of the Commission under Subsection 161b or 161i of the Act to issue rules, regulations, or orders to protect the common defense and security, to protect restricted data or to guard against the loss or diversion of special nuclear material.

Article V

The Commission will cooperate with the State and other Agreement States in the formulation of standards and regulatory programs of the State and the Commission for protection against hazards of radiation and to assure that State and Commission programs for protection against hazards of radiation will be coordinated and compatible. The State agrees to cooperate with the Commission and other Agreement States in the formulation of standards and regulatory programs of the State and the Commission for protection against hazards of radiation and to assure that the State's program will continue to be compatible with the program of the Commission for the regulation of materials covered by this Agreement.

The State and the Commission agree to keep each other informed of proposed changes in their respective rules and regulations, and to provide each other the opportunity for early and substantive contribution to the proposed changes.

The State and the Commission agree to keep each other informed of events, accidents, and licensee performance that may have generic implication or otherwise be of regulatory interest.

Article VI

The Commission and the State agree that it is desirable to provide reciprocal recognition of licenses for the materials listed in Article I licensed by the other party or by any other Agreement State. Accordingly, the Commission and the State agree to develop appropriate rules, regulations, and procedures by which such reciprocity will be accorded.

Article VII

The Commission, upon its own initiative after reasonable notice and opportunity for hearing to the State, or upon request of the Governor of the State, may terminate or suspend all or part of this Agreement and reassert the licensing and regulatory authority vested in it under the Act if the Commission finds that (1) such termination or suspension is required to protect public health and safety, or (2) the State has not complied with one or more of the requirements of Section 274 of the Act. The Commission may also, pursuant to Section 274j of the Act, temporarily suspend all or part of this Agreement if, in the judgement of the Commission, an emergency situation exists requiring immediate action to protect public health and safety and the State has failed to take necessary steps. The Commission shall periodically review actions taken by the State under this Agreement to ensure compliance with Section 274 of the Act which requires a State program to be adequate to protect public health and safety with respect to the materials covered by this Agreement and to be compatible with the Commission's program.

Article VIII

In the licensing and regulation of byproduct material as defined in Section 11e.(2) of the Act, or of any activity which results in production of such material, the State shall comply with the provisions of Section 274o of the Act. If in such licensing and regulation, the State requires financial surety arrangements for reclamation or long-term surveillance and maintenance of such material,

A. The total amount of funds the State collects for such purposes shall be transferred to the United States if custody of such material and its disposal site is transferred to the United States upon termination of the State license for such material or any activity which results in the production of such material. Such funds include, but are not limited to, sums collected for long-term surveillance or maintenance. Such funds do not, however, include monies held as surety where no default has occurred and the reclamation or other bonded activity has been performed; and

B. Such surety or other financial requirements must be sufficient to ensure compliance with those standards established by the Commission pertaining to bonds, sureties, and financial arrangements to ensure adequate reclamation and long-term management of such byproduct material and its disposal site.

Article IX

This Agreement shall become effective on July 22, 1999, and shall remain in effect unless and until such time as it is terminated pursuant to Article VIII.

Done at Columbus, Ohio this (date to be determined).

For the United States Nuclear Regulatory Commission.

Chairman

For the State of Ohio

Governor

[FR Doc. 99–8026 Filed 3–31–99; 8:45 am]

BILLING CODE 7590–01–P

RAILROAD RETIREMENT BOARD

Proposed Collection; Comment Request

SUMMARY: In accordance with the requirement of Section 3506(c)(2)(A) of the Paperwork Reduction Act of 1995 which provides opportunity for public comment on new or revised data collections, the Railroad Retirement Board (RRB) will publish periodic summaries of proposed data collections.

Comments are invited on: (a) Whether the proposed information collection is necessary for the proper performance of the functions of the agency, including whether the information has practical utility; (b) the accuracy of the RRB's estimate of the burden of the collection of the information; (c) ways to enhance the quality, utility, and clarity of the information to be collected; and (d) ways to minimize the burden related to the collection of information on respondents, including the use of automated collection techniques or other forms of information technology.

Title and Purpose of information collection: Request for Medicare payment; OMB 3220–0131. Under section 7(d) of the Railroad Retirement Act, the RRB administers the Medicare program for persons covered by the railroad retirement system. The collection obtains the information

needed by the United Healthcare Insurance Company, the Medicare carrier for railroad retirement beneficiaries, to pay claims for payments under Part B of the Medicare program. Authority for collecting the information is prescribed in 42 CFR 424.32.

The RRB currently utilizes Forms G–740S and HCFA 1500 to secure the information necessary to pay Part B Medicare Claims. One response is completed for each claim. Completion is required to obtain a benefit. No changes are proposed to RRB Form G–740S or HCFA Form 1500. The RRB estimates annual respondent burden associated with RRB Form G–740S as follows:

Estimated number of responses: 100.

Estimated completion time per response: 15 minutes.

Estimated annual burden hours: 25.

Additional Information or Comments: To request more information or to obtain a copy of the information collection justification, forms, and/or supporting material, please call the RRB Clearance Officer at (312) 751–3363. Comments regarding the information collection should be addressed to Ronald J. Hodapp, Railroad Retirement Board, 844 N. Rush Street, Chicago, Illinois 60611–2092. Written comments should be received within 60 days of this notice.

Chuck Mierzwa,

Clearance Officer.

[FR Doc. 99–8036 Filed 3–31–99; 8:45 am]

BILLING CODE 7905–01–M

SECURITIES AND EXCHANGE COMMISSION

[Rel. No. IC–23762; File No. 812–11400]

Manufacturers Investment Trust, et al.; Notice of Application

March 25, 1999.

AGENCY: Securities and Exchange Commission (the ''Commission'').

ACTION: Notice of application for an order under section 17(b) of the Investment Company Act of 1940 (the ''Act'').

SUMMARY OF APPLICATION: Applicants seek an order exempting them from the provisions of section 17(a) of the Act to the extent necessary to permit the merger of the Worldwide Growth Trust and the Capital Growth Bond Trust (collectively, the ''Transferor Portfolios'') of the Manufacturers Investment Trust (''Manulife Investment Trust'' or the ''Investment Trust'') with and into the Global Equity Trust and the Investment Quality Bond Trust (collectively, the ''Acquiring Portions''), respectively, of the Investment Trust.

APPLICANTS: Manulife Investment Trust, Manufacturers Securities Services, LLC (''Manulife Securities''), The Manufacturers Life Insurance Company of North America (''Manulife North America''), The Manufacturers Life Insurance Company of New York (''Manulife New York''), The Manufacturers Life Insurance Company (''Manulife''), The Manufacturers Life Insurance Company of America (''Manufacturers America''), The Manufacturers Life Insurance Company (U.S.A.) (''Manufacturers U.S.A.''), and Manufacturers Adviser Corporation (''MAC'').

FILING DATES: The application was filed on November 13, 1998, and amended on March 18, 1999.

HEARING OR NOTIFICATION OF HEARING: An order granting the application will be issued unless the Commission orders a hearing. Interested persons may request a hearing by writing to the Secretary of the Commission and serving Applicants with a copy of the request personally or by mail. Hearing requests should be received by the Commission by 5:30 p.m. on April 19, 1999, and should be accompanied by proof of service on the Applicants in the form of an affidavit or, for lawyers, a certificate of service. Hearing requests should state the nature of the writer's interest, the reason for the request, and the issues contested. Persons who wish to be notified of a hearing may request notification by writing to the Secretary of the Commission.

ADDRESSES: For the Commission: Secretary, Securities and Exchange Commission, 450 Fifth Street, NW, Washington, DC 20549–0609. For the Applicants: Manulife Investment Trust and Manulife Securities, 73 Tremont Street, Boston, Massachusetts 02108; Manulife North America, 116 Huntington Avenue, Boston Massachusetts 02116; Manulife New York, International Corporate Center at Rye, 555 Theodore Fremd Avenue, Suite C–209, Rye, New York 10580; Manulife, Manufacturers America, Manufacturers U.S.A. and MAC at 200 Bloor Street East, Toronto, Ontario, Canada M4W 1E5.

FOR FURTHER INFORMATION CONTACT: Keith E. Carpenter, Senior Counsel, or Kevin M. Kirchoff, Branch Chief, Office of Insurance Products, Division of Investment Management, at (202) 942–0670.

SUPPLEMENTARY INFORMATION: The following is a summary of the application. The complete application is available for a fee from the Commission's Public Reference Branch, 450 Fifth St., NW, Washington, DC (tel (202) 942–8090).

Applicants' Representations

1. Applicants state that Manulife Investment Trust is an open-end, series, management investment company registered under the Act, which currently offers 36 investment portfolios (collectively, the ''Portfolios''). The Investment Trust receives investment advisory services from Manulife Securities. In addition, MAC serves as subadviser to the Capital Growth Bond Trust, one of the Portfolios involved in the proposed reorganization. The shares of Manulife Investment Trust are sold generally only to insurance companies and their separate accounts as the underlying investment medium for variable annuity and variable life insurance contracts issued by such insurance companies. Manulife North America, Manulife New York, Manufacturers America and Manufacturers U.S.A. and their separate accounts are the only shareholders of the Transferor Portfolios and the Acquiring Portfolios. Manulife North America is controlled by Manulife, a Canadian mutual life insurance company based in Toronto, Canada. Manulife New York, Manufacturers America and Manufacturers U.S.A. are indirect wholly-owned subsidiaries of Manulife.

2. Applicants state that it is proposed that the Transferor Portfolios merge with and into the Acquiring Portfolios, respectively, (the ''Reorganization''), pursuant to the terms and conditions stated in the Agreement and Plan of Reorganization (the ''Plan''). In the Reorganization, all of the assets of each Transferor Portfolio will be transferred to a corresponding Acquiring Portfolio having a substantially similar investment objective. In exchange, each Acquiring Portfolio will issue and deliver to the corresponding Transferor Portfolio shares of such Acquiring Portfolio. The total value of all shares of each Acquiring Portfolio issued in the Reorganization will equal the total value of the net assets of the corresponding Transferor Portfolio being acquired by such Acquiring Portfolio. In connection with the Reorganization, shares of each Acquiring Portfolio will be distributed to holders of the shares of the respective corresponding Transferor Portfolio in liquidation of the Transferor Portfolio. The number of full and fractional shares of an Acquiring Portfolio received by a shareholder of the corresponding Transferor Portfolio will be equal in value to the value of that shareholder's

shares of the corresponding Transferor Portfolio as of the close of regularly scheduled trading on the New York Stock Exchange on the closing date of the Reorganization. As a result of the Reorganization, each holder of shares of each Transferor Portfolio will become a holder of shares of the Acquiring Portfolio.

3. Applicants state that Reorganization will be affected in two distinct but contemporaneous transfers. The Global Equity Trust will acquire the assets and liabilities of the Worldwide Growth Trust and the Investment Quality Bond Trust will acquire the assets and liabilities of the Capital Growth Bond Trust.

4. Applicants state that the Reorganization will be submitted to a vote of the shareholders of the Transferor Portfolios for approval at a special shareholders' meeting in accordance with Massachusetts law, the Act and Commission rules. The shareholders of the Transferor Portfolios are Manulife North America, Manulife New York, Manufacturers America and Manufacturers U.S.A., through their registered and unregistered separate accounts. Manulife North America, Manulife New York, Manufacturers America and Manufacturers U.S.A. thus have the right to vote upon matters that are required by the Act to be approved or ratified by shareholders and to vote upon any other matters that may be voted upon at a special shareholders' meeting. However, each of Manulife North America, Manulife New York, Manufacturers America and Manufacturers U.S.A. will vote all shares of the Transferor Portfolios in accordance with and in proportion to timely instructions received from owners of the variable contracts issued by it participating in separate accounts registered under the Act, the values of which are invested in shares of the Transferor Portfolios through such separate accounts at the record date. Shares of each Transferor Portfolio for which properly executed voting instruction forms are not received, including shares not attributable to variable contracts, will be voted in the same proportion as that of shares of such Transferor Portfolio for which instructions are received. Prior to voting on the Reorganization, contractholders participating in registered separate accounts holding shares of the Transferor Portfolios will receive a Notice of Special Meeting of Shareholders and combined prospectus/proxy statement containing all material disclosures, including any material differences in investment objectives and policies.

5. Applicants represent that a description of the respective subadvisory fees for the Transferor Portfolios and the corresponding Acquiring Portfolios and a pro forma presentation of expenses after giving effect to the Reorganization were included in the materials presented to the Board of Trustees and will be included in the prospectus/proxy statement delivered to shareholders of the Transferor Portfolios, in each case in connection with their consideration of the Reorganization. It is anticipated that the investment management fees and the annualized expenses as a percentage of average net assets paid by the Acquiring Portfolios generally will be comparable to or lower than those paid by the corresponding Transferor Portfolios.

Applicants' Legal Analysis

1. Section 17(a) of the Act provides in part that it is unlawful for any affiliated person of a registered investment company, or any affiliated person of such an affiliated person, acting as principal, knowingly to sell to such investment company or to purchase from such investment company any securities or other property.

2. Applicants state that as a result of the relationships described above, the Transferor Portfolios and the Acquiring Portfolios may be deemed to be under common control, and therefore, affiliated persons of each other as defined by section 2(a)(3) of the Act, and for the purposes of the prohibitions of section 17(a) of the Act. Alternatively, they may be deemed to be affiliated persons of affiliated persons of each other.

3. Section 17(b) of the Act permits a person to file with the Commission an application for an order exempting a proposed transaction from one or more of the prohibitions of section 17(a). The Commission shall grant such application if evidence establishes that the terms of the proposed transaction are fair and reasonable and do not involve overreaching on the part of any person concerned, and the proposed transaction is consistent with the policy of each registered investment company concerned and with the general purposes of the Act. Applicants seek an order of the Commission, pursuant to section 17(b) of the Act, exempting them from the provisions of section 17(a) of the Act.

4. Rule 17a–8 under the Act provides, in part, that a merger of registered investment companies which are affiliated persons solely by reason of having a common investment adviser, directors, and/or officers is exempt from the prohibitions of Section 17(a). Applicants state that Rule 17a–8 is not availale because of the share ownership by the affiliated insurance companies. Applicants state that, as a substantive matter, the Reorganization is consistent with the routine mergers that otherwise do not require exemptive relief, as well as with the spirit of Rule 17a–8. Applicants state that the additional affiliations presented arise out of the nature of variable product investing and are negated by the fact that contractholders participating in registered separate accounts holding shares of the Transferor Portfolios will have the opportunity to provide voting instructions on the Reorganization and that all shares technically owned by Manulife North America, Manulife New York, Manufacturers America and Manufacturers U.S.A. will be vetoed in proportion to voting instructions received.

5. The Board of Trustees of Manulife Investment Trust, including the disinterested Trustees, has reviewed the contemplated transactions and determined that the participation by each Transferor Portfolio and each corresponding Acquiring Portfolio in the Reorganization is in the best interest of each Transferor Portfolio and each corresponding Acquiring Portfolio, as well as in the best interests of shareholders and the contractholders whose contract values are invested in shares of the Transferor Portfolios and the corresponding Acquiring Portfolios, and that the interests of existing shareholders and contractholders will not be diluted as a result of the Reorganization. Accordingly, if Rule 17a–8 were available, its conditions would be satisfied.

6. Applicants represent that the Plan will provide that the exchange of assets and liabilities of the Transferor Portfolios for shares of capital stock of the Acquiring Portfolios shall be accomplished on the basis of the net asset value of the respective Portfolios, and thus the Reorganization will not involve dilution of the interests of existing shareholders or contractholders. Applicants submit that the terms of the proposed transactions are fair and reasonable and do not involve overreaching on the part of any person concerned.

7. Applicants represent that the proposed transactions have been reviewed by the Board of Trustees for consistency with the policies of the Transferor Portfolios and the Acquiring Portfolios. Material differences, if any, between a Transferor Portfolio and its corresponding Acquiring Portfolio, including differences in investment

policies have been reviewed by the Board of Trustees and described in the prospectus/proxy statement. Applicants state that this is precisely the same process followed with respect to reorganizations that fit within the technical requirements of Rule 17a–8.

8. Applicants state that the proposed transactions are also consistent with the general purposes of the Act as stated in the Findings and Declaration of Policy in Section 1 of the Act, and that the proposed transactions do not result in any of the self-dealing abuses that the Act was designed to prevent.

9. Applicants represent that the terms of the proposed transactions are consistent with the provisions, policies and purposes of the Act in that they are reasonable and fair to all parties, do not involve overreaching, and are consistent with the investment objective and policies of each Transferor Portfolio and of each Acquiring Portfolio participating in the proposed transactions. The participation in the Reorganization by each portfolio is at respective net asset value, and not on a basis different or less advantageous than that of other participants. Contractholders will have the opportunity to provide voting instructions as to whether the Reorganization should be approved with respect to each Transferor Portfolio.

Conclusion

For the reasons stated herein, Applicants state that the terms of the contemplated transactions meet all the requirements of section 17(b) of the Act.

For the Commission, by the Division of Investment Management, pursuant to delegated authority.

Margaret H. McFarland,

Deputy Secretary.

[FR Doc. 99–7958 Filed 3–31–99; 8:45 am]

BILLING CODE 8010–01–M

SECURITIES AND EXCHANGE COMMISSION

[Rel. No. IC–23764; File No. 812–11412]

PFL Life Insurance Company, *et al.*

March 26, 1999.

AGENCY: Securities and Exchange Commission (the ''Commission'').

ACTION: Notice of Application for Approval and Exemption under the Investment Company Act of 1940 (the ''1940 Act'' or ''Act''). Order requested pursuant to section 26(b) of the 1940 approving the proposed substitution of securities and pursuant to section 17(b) of the 1940 Act Act exempting the proposed transaction from section 17(a) of the 1940 Act.

SUMMARY OF APPLICATION: Applicants seek an order approving the substitution of securities issued by the WRL Fund and held by the Accounts to support certain policies issued by the Companies (the ''Policies''). Applicants also seek an order exempting them from Section 17(a) of the 1940 Act to the extent necessary to carry out the above-referenced substitution by redeeming securities in-kind or partly in-kind and using the redemption proceeds to purchase securities issued by the Endeavor Trust.

APPLICANTS: PFL Life Insurance Company (''PLF''), PLF Endeavor VA Separate Account (the ''Endeavor Account''), AUSA Life Insurance Company, Inc. (''AUSA'' and together with PLF the ''Companies''), AUSA Endeavor Variable Annuity Account (the ''AUSA Account'' and together with the Endeavor Account the ''Accounts''), Endeavor Series Trust (the ''Endeavor Trust'') and WRL Series Fund, Inc. (the ''WRL Fund'') (all collectively, the ''Applicants'').

FILING DATE: The application was filed on November 20, 1998, and amended and restated on February 16, 1999.

HEARING OR NOTIFICATION OF HEARING: An Order granting the application will be issued unless the Commission orders a hearing. Interested persons may request a hearing on this application by writing to the Secretary of the Commission and serving the Applicants with a copy of the request, personally or by mail. Hearing requests must be received by the Commission by 5:30 p.m. on April 20, 1999, and should be accompanied by proof of service on the Applicants in the form of an affidavit or, for lawyers, a certificate of service. Hearing requests should state the nature of the writer's interest, the reason for the request, and the issues contested. Persons may request notification of a hearing by writing to the Secretary of the Commission.

ADDRESSES: Secretary, Securities and Exchange Commission, 450 Fifth Street, NW, Washington, DC 20549–0609. Applicants, Frank A. Camp, Esquire, PFL Life Insurance Company, 4333 Edgewood Road, NE, Cedar Rapids, Iowa 52499, Vincent J. McGuinnes, Jr., Endeavor Series Trust, 2101 East Coast Highway, Suite 300, Corona del Mar, California 92625, Thomas E. Pierpan, Esquire, WRL Series Fund, Inc., 570 Carillon Parkway, St. Petersburg, Florida 33716. Copies to Frederick R. Bellamy, Esquire, Sutherland Asbill & Brennan LLP, 1275 Pennsylvania Avenue, NW, Washington, DC 20004–2415, Robert N. Hickey, Esquire, Sullivan & Worcester LLP, 1025 Connecticut Avenue, NW, Washington, DC 20036–5480.

FOR FURTHER INFORMATION CONTACT: Lorna MacLeod, Attorney, or Susan Olson, Branch Chief, Office of Insurance Products, Division of Investment Management, at (202) 942–0670.

SUPPLEMENTARY INFORMATION: Following is a summary of the application. The complete application is available for a fee from the Commission's Public Reference Branch, 450 Fifth Street, NW, Washington, DC 20549 (tel. 202–942–8090).

Applicants' Representations

1. PFL, a stock life insurance company incorporated under the laws of Iowa, is the depositor and sponsor of the Endeavor Account. PFL is a wholly-owned indirect subsidiary of AEGON USA, Inc., which is a wholly-owned subsidiary of AEGON n.v. of the Netherlands. AEGON n.v. is a holding company whose subsidiaries engage primarily in the insurance business.

2. AUSA, a stock life insurance company incorporated under the laws of New York, is the depositor and sponsor of AUSA Account. AUSA is a wholly-owned indirect subsidiary of AEGON USA, Inc.

3.The Endeavor Account is registered under the Act as a unit investment trust (File No. 811–6032). The assets of the Endeavor Account support certain flexible premium variable annuity policies, and interests in the Endeavor Account offered through such policies have been registered under the Securities Act of 1933 (''1933 Act'') on Form N–4 (File Nos. 33–33085 and 33–56908). Thirteen sub-accounts are available under the policies that invest exclusively in corresponding portfolios of two management investment companies.

4. The AUSA Account is registered under the Act as a unit investment trust (File No. 811–8750). The assets of the AUSA Account support certain flexible premium variable annuity policies, and interests in the AUSA Account offered through such policies have been registered under 1933 Act on Form N–4 (File No. 33–83560). Eleven sub-accounts are available under the policies. The sub-accounts invest in eleven of the thirteen portfolios in which the Endeavor Account policies invest.

5. The Endeavor Trust is a diversified open-end management investment company, registered on Form N–1A, that offers a selection of managed investment portfolios. The following ten portfolios are current available to both Accounts: Endeavor Asset Allocation

Portfolio, Endeavor Money Market Portfolio, T. Rowe Price International Stock Portfolio, T. Rowe Price Equity Income Portfolio, T. Rowe Price Growth Stock Portfolio, Dreyfus Small Cap Value Portfolio, Dreyfus U.S. Government Securities Portfolio, Endeavor Value Equity Portfolio, Endeavor Opportunity Value Portfolio, and Endeavor Enhanced Index Portfolio. Two additional portfolios—Endeavor Select 50 Portfolio and Endeavor High Yield Portfolio—are available only to the Endeavor Account.

6. Since January 1, 1999, Endeavor Management Company has been the manager of the Endeavor Trust. Previously, the manager of the trust had been Endeavor Investment Advisers, which was a general partnership between Endeavor Management Company and AUSA Financial Markets, Inc. (an affiliate of PFL and AUSA). The manager contracts with sub-advisers to provide investment services to the portfolios of the trust.

7. The WRL Fund is a diversified open-end management investment company that is registered on Form N–1A. Of eighteen investment portfolios currently offered by the fund, only one—the WRL Growth Portfolio—is available to policies issued from the Accounts.

8. The investment adviser of the WRL Fund is WRL Investment Management, Inc., a subsidiary of Western Reserve. Western Reserve is a wholly-owned indirect subsidiary of AEGON USA and, therefore, an affiliate of PFL and AUSA. WRL Investment Management, Inc. has contracted with Janus Capital Corporation to provide investment services to the WRL Growth Portfolio.

9. The Policies reserve to PFL and AUSA, as applicable, the right, subject to Commission approval, to substitute shares of another open-end management investment company or portfolio for shares of an open-end management investment company held by a sub-account of the relevant Account. The Statement of Additional Information for the Endeavor Account policies and the Prospectus for the AUSA Account policies disclose this right.

10. Currently, an unlimited amount of transfers of cash value can be made among and between the sub-accounts available as investment options under the Policies without the imposition of a transfer charge. Transfers are subject to a minimum amount of the lesser of $500 or the entire sub-account value. All the Policies reserve to PFL or AUSA, as applicable, the right to restrict transfers, or to charge up to $10 for any transfer in excess of twelve per Policy year.

11. PFL and AUSA propose to substitute shares of the Endeavor Janus Growth Portfolio of the Endeavor Trust for shares of the WRL Growth Portfolio of the WRL Fund held in the Endeavor Account and the AUSA Account. The proposed substitutions will cause all the investment options available under the Policies to be consolidated into one series investment company—the Endeavor Trust.

12. The Endeavor Janus Growth Portfolio of the Endeavor Trust was created specifically for the proposed substitutions. The Endeavor Janus Growth Portfolio has identical investment objectives and substantially similar investment policies to those of the WRL Growth Portfolio. Like the WRL Growth Portfolio, it is sub-advised by Janus Capital Corporation and pays an advisory fee of 0.80% of average daily assets. The WRL Growth Portfolio's total expenses for the year ended December 31, 1997, were 0.87%. Endeavor Management Company has agreed to waive fees and reimburse expenses that exceed 0.87% of the Endeavor Janus Growth Portfolio's assets for at least one year.

13. By supplements to the prospectuses for the Policies, all owners and prospective owners of the Policies will be notified of PFL's and AUSA's intention to take the necessary actions, including seeking the order requested by this application, to substitute portfolios as described. The supplements will advise owners and prospective owners that after the date of the proposed substitution, the Endeavor Janus Growth Portfolio will replace the WRL Growth Portfolio as the underlying investment for such sub-accounts. In addition, the supplements will inform owners and prospective owners that neither PFL nor AUSA will exercise any right reserved by it under any of the Policies to impose restrictions or fees on transfers until at least thirty days after the proposed substitutions.

14. Before the date of the proposed substitutions, affected owners will be provided with a prospectus (or preliminary prospectus) for the Endeavor Janus Growth Portfolio. Thus, any owner affected by either substitution will have received prospectus disclosure for the Endeavor Janus Growth Portfolio in advance of the proposed substitutions.

15. On the date of the substitution, PFL and AUSA, on behalf of the Endeavor Account and the AUSA Account, respectively, will redeem shares of the WRL Growth Portfolio held by the Accounts. To the extent practical, redemptions will be effected substantially in-kind. The WRL Fund will transfer the redemption proceeds (securities and cash) to the Endeavor Trust, and shares of the Endeavor Janus Growth Portfolio of equal value will be issued to the Endeavor and AUSA Accounts. The purpose of transferring assets in-kind is to avoid commission expenses.

16. Applicants assert that the proposed in-kind transfers, including the consideration to be paid and received, are reasonable and fair and do not involve overreaching on the part of any person involved. The transfers will be based on the independent market price of the security valued as specified in paragraph (b) of Rule 17a–7 and the net asset value per share of the Endeavor Janus Growth Portfolio and the WRL Growth Portfolio valued in accordance with procedures disclosed in the portfolios' registration statements. Additionally, Applicants assert that the transfers will be effected in a manner consistent with the investment objectives and policies of the substituted portfolio. Endeavor Management Company and Janus Capital Corporation will examine the portfolio securities being offered to the Endeavor Janus Growth Portfolio and accept only those securities that could otherwise have been acquired for the portfolio in a cash transaction.

17. The proposed substitutions will take place at relative net asset value with no change in the amount of any Policy owner's cash value or death benefit or in the dollar value of his or her investment in any of the Accounts. Policy owners will not incur any additional fees or charges as a result of the proposed substitutions nor will their rights or PFL's and AUSA's obligations under the Policies be altered in any way. All expenses incurred in connection with the proposed substitutions, including legal, accounting and other fees and expenses, will be paid by PFL and/or Endeavor Management Company. In addition, the proposed substitutions will not impose any tax liability on Policy owners. The proposed substitutions will not cause the Policy fees and charges currently paid by existing Policy owners to be greater after the proposed substitutions than before the proposed substitutions. Neither PFL nor AUSA currently impose any restriction or fee on transfers under the Policies, and neither will exercise any right it may have under the Policies to impose restrictions on transfers under the Policies for a period of at least thirty days following the substitution.

18. Within five business days after the proposed substitutions any owner who was affected by the substitutions will be

sent a written notice stating that the substitutions were carried out and that they may transfer all cash value under a Policy invested in each of the affected sub-accounts to other available sub-account(s). The notice will reiterate that neither PFL nor AUSA will exercise any right reserved by it under any of the Policies to impose restrictions or fees on transfers until at least thirty days after the proposed substitutions.

Legal Analysis

1. Section 26(b) of the Act requires the depositor of a registered unit investment trust holding the securities of a single issuer to obtain Commission approval before substituting the securities held by the trust. Specifically, the section provides that ''(i)t shall be unlawful for any depositor or trustee of a registered until investment trust holding the security of a single issuer to substitute another security for such security unless the Commission shall have approved such substitution.'' The section further provides that the Commission shall issue an order approving such substitution of the evidence establishes that it is consistent with the protection of investors and the purposes fairly intended by the policy and provisions of the Act.

2. Applicants request an order pursuant to section 26(b) of the 1940 Act approving the substitution. Applicants assert that the proposed substitutions meet the standards that the Commission and its staff have applied to substitutions that have been approved in the past and are consistent with the protection of investors and the purposes fairly intended by the policy and provisions of the Act.

3. Section 17(a)(1) of the Act, in relevant part, prohibits any affiliated person of a registered investment company, or any affiliated person of such person, acting as principal, from knowingly selling any security or other property to that company. Section 17(a)(2) of the Act generally prohibits any of such affiliated persons, acting as principals, from knowingly purchasing any security or other property from the registered investment company. The transfer of proceeds emanating out of the redemption in-kind of shares of the WRL Growth Portfolio and the purchase of shares of the Endeavor Janus Growth Portfolio may be deemed to involve the purchase and sale of securities between the WRL Fund and the Endeavor Trust or more indirectly between the WRL Fund and the Accounts and between the Accounts and the Endeavor Trust. PFL, AUSA, the Accounts, the WRL Fund and the Endeavor Trust may all be considered affiliates or affiliates of affiliates of each other subject to the restrictions of section 17(a). PFl and AUSA, through various separate accounts, own of record a majority of shares of the Endeavor Trust and, along with Western Reserve, all of the shares of the WRL Fund. In addition, the Endeavor Trust and the WRL Fund may be under the control of (or under common control with) PFL and AUSA.

4. Section 17(b) provides that the Commission may grant an order exempting a proposed transaction provided: (i) The terms of the proposed transaction, including the consideration to be paid or received, are reasonable and fair and do not involve overreaching on the part of any person concerned; (ii) the proposed transaction is consistent with the policy of each registered investment company concerned, as recited in its registration statement and reports filed under the Act; and (iii) the proposed transaction is consistent with the general purposes of the Act.

5. Applicants request an order pursuant to section 17(b) of the Act exempting them from section 17(a) of the Act to the extent necessary to carry out the substitution by redeeming securities in-kind or partly in-kind. Applicants assert that the terms of the proposed substitutions as set forth herein, including the consideration to be paid and received, are reasonable and fair to: (1) The Endeavor Trust and the Endeavor Janus Growth Portfolio, (2) the WRL Fund and the WRL Growth Portfolio, and (3) policy owners invested in the WRL Growth Portfolio; and do not involve overreaching on the part of any person concerned. Applicants assert that the proposed substitution will conform to all the conditions of Rule 17a–7 and each fund's procedures thereunder, except that the consideration paid for securities being purchased or sold may not be entirely cash. To the extent that in-kind transactions do not comply with the requirements of Rule 17a–7, applicants assert that the proposed transactions provide the same degree of protection as provided by the conditions of the rule. Applicants further assert that the proposed transaction is consistent with the policy of: (1) the Endeavor Trust and the Endeavor Janus Growth Portfolio, and (2) the WRL Fund and the WRL Growth Portfolio, as recited in its current registration statement and are consistent with the general purposes of the 1940 Act.

6. Applicants assert that consolidating all investment options for the Policies under the Endeavor Trust will result in overall benefits to Policy owners, by simplifying the disclosure required in each Policy's prospectus and by making the Accounts less cumbersome to administer.

Conclusion

Applicants submit that, for all the reasons stated above, the proposed substitutions are consistent with the protection of investors and the purposes fairly intended by the policy and provisions of the Act.

For the Commission, by the Division of Investment Management, pursuant to delegated authority.

Margaret H. McFarland,

Deputy Secretary.

[FR Doc. 99–7957 Filed 3–31–99; 8:45 am]

BILLING CODE 8010–01–M

SECURITIES AND EXCHANGE COMMISSION

[Rel. No. IC–23763; File No. 81–11464]

Sun Capital Advisers Trust, et. al

March 25, 1999.

AGENCY: Securities and Exchange Commission (''SEC'' or ''Commission'').

ACTION: Notice of application for an order pursuant to section 6(c) of the Investment Company Act of 1940 (''1940 Act'') granting exemptive relief from sections 9(a), 13(a), 15(a) and 15(b) of the 1940 Act and rules 6e–2(b)(15) and 6e–3(T)(b)(15) thereunder.

SUMMARY OF APPLICATION: Applicants seek an order to permit shares of Sun Capital Advisers Trust (''Trust'') and any other similar investment companies that Sun Capital Advisers, Inc. (''Sun Advisers'' or ''Adviser'') may in the future serve or manage as investment adviser, administrator, principal underwriter or sponsor (the Trust and these similar investment companies; the ''Funds''), to be sold to and held by: (1) Separate accounts funding variable annuity and variable life insurance contracts issued by both affiliated life insurance companies; and (2) qualified pension and retirement plans outside of the separate account context for which shares of the Funds would be held by the trustees of those plans (''Qualified Plans'' or ''Plans'').

APPLICANTS: Sun Capital Advisers Trust and Sun Capital Advisers, Inc.

FILING DATE: The application was filed on January 11, 1999.

HEARING OR NOTIFICATION OF HEARING: An order granting the application will be issued unless the SEC orders a hearing. Interested persons may request a hearing by writing to the SEC's Secretary and serving applicants with a copy of the request, personally or by

mail. Hearing requests should be received by the Commission by 5:30 p.m. on April 19, 1999, and should be accompanied by proof of service on applicants, in the form of an affidavit or, for lawyers, a certificate of service. Hearing requests should state the nature of the writer's interest, the reason for the request, and the issues contested. Persons who wish to be notified of a hearing may request notification by writing to the SEC's Secretary.

ADDRESSES: Secretary, SEC, 450 Fifth Street, NW, Washington, DC 20549–0609. Applicants, c/o Peter F. Demuth, Esq., Sun Life of Canada, One Sun Life Executive Park, Wellesley Hills, Massachusetts 02481.

FOR FURTHER INFORMATION CONTACT: Laura A. Novack, Senior Counsel, or Kevin M. Kirchoff, Branch Chief, Office of Insurance Products, Division of Investment Management, at (202) 942–0670.

SUPPLEMENTARY INFORMATION: The following is a summary of the application. The complete application may be obtained for a fee from the SEC's Public Reference Branch, 450 Fifth Street, NW, Washington, DC 20549 ((202) 942–8090).

Applicants' Representations

1. The Trust is an open-end management investment company organized as a Delaware business trust, registered under the Securities Act of 1933 and the 1940 Act. The Trust currently consists of three separate series of shares (''Series''), each of which has its own investment objectives and policies. The Trust may issue additional classes of shares in the future.

2. Sun Advisers is registered as an investment adviser under the Investment Advisers Act of 1940, as amended, and is the investment adviser for each Series.

3. The Funds would offer shares of its Series to separate accounts registered under the 1940 Act as unit investment trusts (''Separate Accounts'') of multiple affiliated and unaffiliated life insurance companies to serve as the investment medium for variable contracts issued by the life insurance companies. Variable contracts may include variable annuity contracts and variable life insurance contracts (collectively, ''Variable Contracts''). The Funds may in the future offer their shares to other separate accounts that are not registered as investment companies under the 1940 Act pursuant to the exceptions from registration in sections 3(c)(1) and 3(c)(11) of the 1940 Act. Insurance companies whose separate accounts would own shares of the Funds are referred to as ''participating insurance companies.''

4. Each participating insurance company will have the legal obligation to satisfy all requirements applicable to it under the federal securities laws in connection with any Variable Contract issued by such company. The Funds' role under this arrangement, so far as the federal securities laws are applicable, will be limited to that of offering their shares to separate accounts of participating insurance companies and fulfilling any conditions the Commission may impose upon granting the order requested herein.

5. The Funds also may offer shares directly to Qualified Plans outside of the separate account context. The Funds propose to offer shares to any Qualified Plans that can, consistent with applicable federal income tax law, invest in the Funds consistent with the Funds serving as investment vehicles for Variable Contracts.

6. It is anticipated that Qualified Plans may choose a Fund (or any one or more series thereof) as the sole investment under the Plan or as one of several investments. Plan participants may or may not be given an investment choice among available alternatives, depending on the Plan itself. Shares of the Funds sold to Qualified Plans would be held by the trustee(s) of these Plans as mandated by section 403(a) of the Employee Retirement Income Security Act of 1974, as amended (''ERISA''). Pass-through voting need not be, but may be, provided to the participants in such Qualified Plans pursuant to ERISA.

Applicants' Legal Analysis

1. In connection with the funding of scheduled premium variable life insurance contracts issued through Separate Accounts, Rule 6e–2(b)(15) provides partial exemptions from sections 9(a), 13(a), 15(a) and 15(b) of the 1940 Act. The exemptions granted by Rule 6e–2(b)(15)—are available only if the management investment company underlying the Separate Account (''underlying fund'') offers its shares ''*exclusively* to variable life insurance separate accounts of the life insurer, or any affiliated life insurance company'' (emphasis added). Therefore, the relief granted by Rule 6e–2(b)(15) is not available for a scheduled premium variable life insurance separate account that owns shares of an underlying fund that also offers its shares to a variable annuity or flexible premium variable life insurance policy of the same company or of any affiliated life insurance company. The use of a common management investment company as the underlying investment medium for both variable annuity and variable life insurance separate accounts of the same life insurance company or of any affiliated life insurance company is referred to as ''mixed funding.''

2. The relief granted by Rule 6e–2(b)(15) also is not available for a scheduled premium variable life insurance separate account that owns shares of an underlying fund that also offers its shares to separate accounts funding Variable Contracts of one or more unaffiliated life insurance companies. The use of a common management investment company as the underlying investment medium for variable life insurance separate accounts of one insurance company and separate accounts funding Variable Contracts of one or more unaffiliated insurance companies is referred to as ''shared funding.''

3. Applicants assert that the relief granted by Rule 6e–2(b)(15) is in no way affected by the purchase of shares of the Funds by Qualified Plans. However, because the relief under Rule 6e–2(b)(15) is available only if shares are offered exclusively to separate accounts, additional exemptive relief is necessary if the shares of the Funds are also to be sold to Plans.

4. In connection with the funding of flexible premium variable life insurance contracts issued through a Separate Account, Rule 6e–3(T)(b)(15) provides partial exemptions from sections 9, 13(a), 15(a) and 15(b) of the 1940 Act. The exemptions granted by 6e–3(T) are available only if the Separate Account's underlying fund offers its shares ''*exclusively* to separate accounts of the life insurer, or of any affiliated life insurance company, offering either scheduled [premium variable life insurance] contracts or flexible [premium variable life insurance] contracts, or both, or which also offer their shares to variable annuity separate accounts of the life insurer or of an affiliated life insurance company.'' (emphasis added). Thus, Rule 6e–3(T)(b)(15) permits mixed funding for a flexible premium variable life insurance separate account, subject to certain conditions. However, Rule 6e–3(T) does not permit shared funding because the relief is not available for a flexible premium variable life insurance separate account that owns shares of a management investment company that also offers its shares to separate accounts (including variable annuity and flexible premium and scheduled premium variable life insurance separate accounts) of unaffiliated life insurance companies.

5. Applicants assert that the relief granted by Rule 6e–3(T) is in no way affected by the purchase of shares of the Funds by Qualified Plans. However, because the relief under Rule 6e–3(T) is available only if shares are offered exclusively to separate accounts, additional exemptive relief is necessary if the shares of the funds are also to be sold to Plans.

6. Applicants state that section 817(h) of the Internal Revenue Code of 1986, as amended (''the Code''), imposes certain diversification standards on the underlying assets of the Variable Contracts held by series of the Funds. The Code provides that a Variable Contract will not be treated as an annuity contract or life insurance contract for any period (and any subsequent period) for which the investments of the segregated asset account on which the Variable Contract is based are not adequately diversified, in accordance with regulations prescribed by the Treasury Department. These diversification regulations are applied by taking into account the assets of an underlying investment company in which the account invests if all of the beneficial interests in the regulated investment company are held by certain designated persons. On March 2, 1989, the Treasury Department published regulations (Treas. Reg. § 1.817–5) which adopted in final form diversification requirements for the investments underlying Variable Contracts. The regulations provide that, in order to meet the diversification requirements, all of the beneficial interests in an underlying regulated investment company must be held by the segregated asset accounts of one or more insurance companies. However, the Regulations also contain certain exceptions to this requirement, one of which allows shares in such an investment company to be held by the trustee of a Qualified Plan. Thus, a fund that serves as an investment vehicle for Variable Contracts may also offer its shares to certain Qualified Plans without adversely affecting, for purposes of the diversification requirements under section 817(h), the ability of shares in the same investment company to also be held by the separate accounts of insurance companies in connection with their Variable Contracts. Treas. Reg. § 1.817–5(f)(3)(iii).

7. Applicants state that the promulgation of Rules 6e–2 and 6e–3(T) preceded the issuance of the Treasury Regulations which made it possible for shares of an investment company to be held by the trustee of a Qualified Plan without adversely affecting the ability of shares in the same investment company to be held by the separate accounts of insurance companies in connection with their Variable Contracts. Thus, the sale of shares of the same investment company to separate accounts and Qualified Plans could not have been envisioned at the time of the adoption of Rules 6e–2(b)(15) and 6e–3(T)(b)(15), given the then-current tax law.

8. Accordingly, Applicants request that the Commission issue an order pursuant to section 6(c) of the 1940 Act exempting variable life insurance separate accounts of participating insurance companies (and, to the extent necessary, any principal underwriter and depositor of such an account) and the Funds from section 9(a), 13(a), 15(a), and 15(b) of the 1940 Act, and sub-paragraph (b)(15) of Rules 6e–2 and 6e–3(T) thereunder, to the extent necessary to permit shares of the Funds to be offered and sold to, and held by: (a) variable annuity and variable life insurance separate accounts of the same life insurance company or of affiliated or unaffiliated life insurance companies, and (b) Qualified Plans.

9. In general, section 9(a) of the 1940 Act disqualifies any person convicted of certain offenses, and any company affiliated with that person, from acting or serving in various capacities with respect to a registered investment company. More specifically, section 9(a)(3) provides that it is unlawful for any company to serve as an investment adviser to, or principal underwriter for, any registered open-end investment company if an affiliated person of that company is subject to disqualification enumerated in sections 9(a)(1) or (2).

10. Rules 6e–2(b)(15)(i) and (ii) and 6e–3(T)(b)(15)(i) and (ii) provide exemptions from section 9(a) under certain circumstances, subject to the limitations discussed above on mixed and shared funding. These exemptions limit the application of the eligibility restrictions to affiliated individuals or companies that directly participate in the management of the underlying management company. The relief provided by the rules permits a person disqualified under section 9(a) to serve as an officer, director, or employee of the life insurer or its affiliates, so long as that person does not participate directly in the management or administration of the underlying investment company. Thus, an insurer shall be eligible to serve as the underlying fund's investment adviser or principal underwriter, provided that none of the insurer's personnel who are ineligible pursuant to section 9(a) are participating in the management of the fund.

11. Applicants state that the partial relief granted in Rules 6e–2 and 6e–3(T) from the requirements of section 9 of the 1940 Act limits, in effect, the amount of monitoring necessary to ensure compliance with Section 9 to that which is appropriate in light of the policy and purposes of that section. Applicants state that there is no regulatory purpose in extending the companies' monitoring requirements to embrace a full application of Section 9(a)'s eligibility restrictions because of mixed or shared funding. Those individuals who participate in the management or administration of the Funds will remain the same regardless of which separate accounts or insurance companies use the Funds. Applicants assert that applying the monitoring requirements of Section 9(a) because of investment by separate accounts of other insurers would be unjustified and would not serve any regulatory purpose. Furthermore, Applicants assert that the increased monitoring costs would reduce the net rates of return realized by contract owners. Applicants further assert that the relief requested will in no way be affected by the proposed sale of shares of the Funds to Qualified Plans, and that the insulation of the Funds from those individuals who are disqualified under the 1940 Act will remain intact even if shares of the Funds are sold to Qualified Plans. Since the Qualified Plans are not investment companies and will not be deemed to be affiliated persons of the participating insurance companies solely by virtue of their shareholdings in the Funds, they are not subject to Section 9(a) and thus no additional relief is necessary.

12. Subparagraph (b)(15)(iii) of Rules 6e–2 and 6e–3(T) under the 1940 Act assumes that contract owners are entitled to pass-through voting privileges with respect to investment company shares held by a separate account. However, subparagraph (b)(15)(iii) of Rules 6e–2 and 6e–3(T) provides exemptions from the pass-through voting requirement with respect to several significant matters.

13. Subparagraph (b)(15)(iii) of Rules 6e–2 and 6e–3(T) provides that an insurance company may disregard the voting instructions of its contract owners with respect to the investments of an underlying fund that would result in changes in the subclassification or investment objectives of the underlying fund, or with respect to any contract between a fund and its investment adviser, when an insurance regulatory authority so requires, subject to certain requirements. In addition, an insurance company may disregard the voting instructions of its contract owners if the

contract owners initiate any change in the underlying fund's investment policies, principal underwriter, or investment adviser (provided that disregarding such voting instructions is reasonable and complies with the other provisions of Rules 6e–2 and 6e–3(T)). Voting instructions with respect to a change in investment policies may be disregarded if the insurance company makes a good-faith determination that such change would: (a) Violate state law; or (b) result in investment that either would not be consistent with the investment objectives of the separate account, or would vary from the general quality and nature of investments and investment techniques used by other separate accounts of the company or of an affiliated life insurance company with similar investment objectives. Voting instructions with respect to a change in an investment adviser or principal underwriter may be disregarded if the insurance company makes a good-faith determination that: (a) The adviser's fees would exceed the maximum rate that may be charged against the separate account's assets; (b) the proposed adviser may be expected to employ investment techniques that vary from the general techniques used by the current adviser; or (c) the proposed adviser may be expected to manage the investments in a manner that would be inconsistent with the investment company's investment objectives or in a manner that would result in investments that vary from certain standards.

14. Applicants state that Rule 6e–2 recognizes that a variable life insurance policy is an insurance contract, has important elements unique to insurance contracts and is subject to extensive state regulation. Applicants maintain that in adopting Rule 6e–2(b)(15)(iii), the Commission expressly recognized that state insurance regulators have authority, pursuant to state insurance laws or regulations, to disapprove or require changes in investment polices, investment advisers or principal underwriters. Applicants also state that the Commission expressly recognized that state insurance regulators have authority to require an insurance company to draw from its general account to cover costs imposed upon the insurance company by a change approved by contract owners over the insurance company's objection. Therefore, the Commission deemed exemptions from pass-through voting requirements necessary ''to assure the solvency of the life insurer and the performance of its contractual obligations by enabling an insurance regulatory authority or the life insurer to act when certain proposals reasonably could be expected to increase the risks undertaken by the life insurer.'' Applicants assert that in this respect, flexible premium variable life insurance contracts are identical to scheduled premium variable life insurance contracts; and that therefore the corresponding provisions of Rule 6e–3(T) undoubtedly were adopted in recognition of the same factors.

15. Applicants submit that state insurance regulators have much the same authority over variable annuity separate accounts as they have over variable life insurance separate accounts, and that variable annuity contracts pose some of the same kinds of risks to insurers as variable life insurance contracts. Applicants submit that while the Commission staff has not been called upon to address the general issue of state insurance regulators' authority over variable annuity contracts, perhaps this is because the Commission has not developed a single comprehensive exemptive rule for variable annuity contracts.

16. Applicants assert that these considerations are no less important or necessary in connection with mixed and shared funding. Applicants state that mixed and shared funding does not compromise the goals of state insurance regulatory authorities or of the Commission. Indeed, Applicants assert that by permitting these arrangements, the Commission eliminates needless duplication of start-up and administrative expenses and facilities the growth of underlying fund assets, thereby making effective portfolio management strategies easier to implement and promoting other economies of scale. Applicants further state that the sale of Fund shares to Plans will not have any impact on the relief requested in this regard. As previously noted, shares of the Funds will be held by the trustees of the Plans as required by section 403(a) of ERISA. Section 403(a) also provides that the trustees must have exclusive authority and discretion to manage and control the Plan investments with two exceptions: (a) When the Plan expressly provides that the trustees are subject to the direction of a named fiduciary who is not a trustee, in which case the trustees are subject to proper directions made in accordance with the terms of the plan and not contrary to ERISA; and (b) when the authority to manage, acquire or dispose of assets of the plan is delegated to one or more investment managers pursuant to section 402(c)(3) of ERISA. Unless one of the two exceptions stated in Section 403(a) applies, Plan trustees have the exclusive authority and responsibility for voting proxies. If a named fiduciary appoints an investment manager, the investment manager has the responsibility to vote the shares held unless the right to vote such shares is reserved to the trustees or the named fiduciary. Where a Qualified Plan does not provide participants with the right to give voting instructions, Applicants do not see any potential for material irreconcilable conflicts between or among contract holders and Plan participants with respect to voting of a Fund's shares. Accordingly, Applicants assert that unlike the case with insurance company separate accounts, the issue of the resolution of material irreconcilable conflicts with respect to voting is not present with respect to Qualified Plans since the Qualified Plans are not required to pass-through voting privileges.

17. Applicants submit that even if a Qualified Plan were to hold a controlling interest in a Fund, Applicants do not believe that such control would disadvantage other investors in the Fund to any greater extent than is the case when any institutional shareholder holds a majority of the voting securities of any open-end management investment company. In this regard, Applicants submit that investment in a Fund by a Plan will not create any of the voting issues occasioned by mixed funding or shared funding. Unlike mixed or shared funding, Plan participant voting rights cannot be frustrated by veto rights of insurers or state regulators. While a Qualified Plan may provide participants with the right to give voting instructions, Applicants assert that there is no reason to believe that participants in Qualified Plans generally, or those in a particular Plan, either as a single group or in combination with participants in other Plans, would vote in a manner that would disadvantage contract owners. In this regard, Applicants submit that the purchase of shares of Funds by Qualified Plans that provide voting rights to participants does not present any complications not otherwise occasioned by mixed and shared funding.

18. Applicants assert that no increased conflicts of interest would be presented by the granting of the requested relief. Applicants assert that shared funding by unaffiliated insurance companies should not present any issues that do not already exist for a single insurance company that is licensed to do business in several or all states. Applicants note that where an insurer is licensed to do business in several or all states, it is possible that a

particular state insurance regulatory body could require action that is inconsistent with the requirements of other states in which the insurance company offers its Variable contracts. Applicants submit that this possibility is not significantly different or greater than exists where different insurers may be domiciled in different states.

19. Applicants further submit that affiliation does not reduce the potential, if any exists, for differences in state regulatory requirements. Affiliated insurers may be domiciled in different states and be subject to differing state law requirements. In any event, the conditions (adapted from the conditions included in rule 6e–3(T)(b)(15)) discussed below are designed to safeguard against, and provide procedures for resolving, any adverse effects that differences among state regulatory requirements may produce. If a particular state insurance regulator's decision conflicts with the majority of other state regulators, the affected insurer will be required to withdraw its separate account's investment in the affected Fund. This requirement will be provided for in agreements that will be entered into by participating insurance companies with respect to their participation in the Funds (''participation agreements'').

20. Applicants also argue that affiliation does not eliminate the potential, if any exists, for divergent judgments as to the advisability or legality of a change in investment policies, principal underwriter, or investment adviser initiated by contract owners. Potential disagreement is limited by the requirement that disregarding voting instructions be reasonable and based on specific good faith determinations. However, if an insurer's decision to disregard contract owner voting instructions represents a minority position or would preclude a majority vote, such insurer may be required, at a Fund's election, to withdraw its separate account's investment in the Fund, and no charge or penalty will be imposed as a result of such a withdrawal. This requirement will be provided for in the Fund's participation agreement.

21. Applicants submit that there is no reason why the investment policies of the Funds would or should be materially different from what these policies would or should be if the Funds funded only variable annuity contracts or variable life insurance contracts, whether flexible premium or scheduled premium contracts. Each type of insurance product is designed as a long-term investment program. Each Fund will be managed to attempt to achieve the Fund's investment objectives, and not to favor or disfavor any particular participating insurer or type of insurance product. Applicants assert that there is no reason to believe that different features of various types of contracts, including the ''minimum death benefit'' guarantee under certain variable life insurance contracts, will lead to different investment policies for different types of Variable Contracts. Applicants state that under existing statutes and regulations, an insurance company and its affiliates can offer a variety of variable annuity and life insurance contracts, some with death benefit guarantees, all funded by a single mutual fund.

22. Applicants also submit that no one investment strategy can be identified as appropriate to a particular insurance product. Each pool of Variable Contract owners is composed of individuals of diverse financial status, ages, insurance needs and investment goals. A Fund supporting even one type of insurance product must accommodate these diverse factors to attract and retain purchasers. Applicants also assert that permitting mixed and shared funding will provide economic support for the growth of the Funds and may encourage more insurance companies to offer Variable Contracts.

23. As noted above, section 817(h) of the Code imposes certain diversification standards on the assets underlying variable annuity contracts and variable life insurance contracts held in the portfolios of management investment companies. Treasury Regulation § 1.817–5(f)(3)(iii), which established diversification requirements for such portfolios, specifically permits ''qualified pension or retirement plans'' and separate accounts to invest in the same underlying management investment company. Therefore, Applicants assert that neither the Code, nor the Treasury regulations, nor the revenue rulings thereunder, present any inherent conflicts of interest if Qualified Plans, variable annuity separate accounts and variable life separate accounts all invest in the same management investment company.

24. Applicants note that while there may be differences in the manner in which distributions from variable annuity contracts, variable life insurance contracts and Qualified Plans are taxed, the tax consequences do not raise any conflicts of interest. When distributions are to be made, and the Separate Account or Qualified Plan cannot net purchase payments to make the distributions, the Separate Account or Qualified Plan will redeem shares of the Funds as their net asset value. The Qualified Plan will then make distributions in accordance with the terms of the Plan, and the life insurance company will make distributions in accordance with the terms of the Variable Contract. Distributions and dividends will be declared and paid by the Funds without regard to the character of the shareholder.

25. Applicants also state that it is possible to provide an equitable means of giving voting rights to Separate Account Contract owners and to the trustees of Qualified Plans. Each Fund or its agent will inform each participating insurance company of each Separate Account's ownership of Fund shares, as well as inform the trustees of Qualified Plans of their holdings. Each participating insurance company will then solicit voting instructions in accordance with Rules 6e–2 and 6e–3(T). Qualified Plans and Separate Accounts will each have the opportunity to exercise voting rights with respect to their Fund shares, although only the Separate Accounts are required to pass through their voting rights to contract owners.

26. Applicants submit that the ability of the Funds to sell their respective shares directly to Qualified Plans does not create a ''senior security,'' as this term is defined under Section 18(g) of the 1940 Act, with respect to any Variable Contract owner as opposed to a participant in a Qualified Plan. Regardless of the rights and benefits of participants in the Qualified Plans, or Variable Contract owners, the Qualified Plans and the Separate Accounts have rights only with respect to their respective shares of the Funds. They can only redeem such shares at their net asset value. No shareholder of any of the Funds will have any preference over any other shareholder with respect to distribution of assets or payments of dividends.

27. Applicants state that there are no conflicts between the contract owners of the Separate Accounts and participants in the Qualified Plans with respect to the state insurance commissioners' veto power over investment objectives. The state insurance commissioners have been given the veto power in recognition of the fact that insurance companies usually cannot simply redeem their separate accounts out of one fund and invest in another. Time-consuming, complex transactions must be undertaken to accomplish these redemptions and transfer. On the other hand, trustees of Qualified Plans can make the decision quickly and implement the redemption of their shares from the Funds and reinvest in

another investment vehicle without the same regulatory impediments or, as is the case with most Qualified Plans, even hold cash pending a suitable investment. Based on the foregoing, Applicants represent that even if conflicts of interest arise between Variable Contract owners and Qualified plans, the issue can be almost immediately resolved because the trustees of the Qualified Plans can, on their own initiative, redeem their Fund shares.

28. Applicants assert that various factors have limited the number of insurance companies that offer variable annuities and variable life insurance policies. Applicants state that these factors include the costs of organizing and operating investment vehicles, the lack of expertise with respect to investment management ([principally with respect to stock and money market investments), and the lack of name recognition by the public of certain insurers as investment experts. Applicants assert that use of the Funds as common investment medium for Variable Contracts would help alleviate these concerns, because participating insurance companies will benefit not only from the investment and administrative expertise of the Adviser, but also from the cost efficiencies and investment flexibility afforded by pooling assets for multiple Variable Contracts and insurance companies in a single underlying Fund. Therefore, Applicants assert, making the Funds available should result in increased competition with respect to both Variable Contract design and pricing, which can be expected to result in more product variation and lower charges.

29. Applicants also submit that mixed and shared funding should provide benefits to Variable Contract owners by eliminating a significant portion of the costs of establishing and administering separate underlying funds. Furthermore, the sale of shares of the Funds to Qualified Plans should result in an increased amount of assets available for investment by the Funds. This may benefit Variable Contract owners by promoting economies of scale, by permitting increased safety through greater diversification, or by making the addition of new series more feasible. Applicants further believe that the sale of the Funds to Qualified Plans does not increase the risk of material irreconcilable conflicts to the Funds or the participating Separate Accounts.

30. Applicants assert that they believe that mixed and shared funding will have no adverse federal income tax consequences.

Applicants' Conditions

Applicants have consented to the following conditions:

1. A majority of the board of trustees (each a ''Board'') of each of the Funds will consist of persons who are not ''interested persons'' of the Funds, as defined by section 2(a)(19) of the 1940 Act and the rules thereunder and as modified by any applicable orders of the Commission. However, if this condition is not met by reason of the death, disqualification, or bona fide resignation of any trustee(s), then the operation of this condition shall be suspended: (a) For a period of 45 days, if the vacancy or vacancies may be filed by the Board; (b) for a period of 60 days, if a vote of shareholders is required to fill the vacancy or vacancies; or (c) for such longer period as the Commission may prescribe by order upon application.

2. The Board will monitor the Funds for the existence of any material irreconcilable conflict between the interests of the contract owners of all Separate Accounts investing in the Funds and all other persons investing in the Funds, including Qualified Plans, and determine what action, if any, should be taken in response to these conflicts. A material irreconcilable conflict may arise for a variety of reasons, including: (a) An action by any state insurance regulatory authority; (b) a change in applicable federal or state insurance, tax or securities laws or regulations, or a public ruling, private letter ruling, no-action or interpretive letter, or any similar action by insurance, tax, or securities regulatory authorities; (c) an administrative or judicial decision in any relevant proceeding; (d) the manner in which the investments of any series of the Funds are being managed; (e) a difference in voting instructions given by variable annuity contract owners, variable life insurance contract owners and Plan trustees; (f) a decision by an insurer to disregard the voting instructions of contract owners; or (g) if applicable, a decision by a Qualified Plan to disregard voting instructions of Plan participants.

3. Participating insurance companies and any Qualified Plan that executes a participation agreement with a Fund (collectively, ''Participating Parties'') and the Adviser will report any potential or existing conflicts of which it becomes aware to the Board of the relevant Fund. Participating Parties and the Adviser will be responsible for assisting the Board in carrying out its responsibilities under these conditions, by providing the Board with all information reasonably necessary for the Board to consider any issues raised. This includes, but is not limited to, an obligation by each participating insurance company to inform the Board whenever contract owner voting instructions are disregarded and, if pass-through voting is applicable, an obligation by each Qualified Plan that is a Participating Party to inform the Board whenever it has determined to disregard Plan participant voting instructions. The responsibility to report such information and conflicts and to assist the Board will be a contractual obligation of all Participating Parties under their participating agreements and these agreements will be carried out with a view only to the interests of the contract owners and Qualified Plan participants.

4. If it is determined by a majority of the Board of a Fund, or a majority of its disinterested trustees, that a material irreconcilable conflict exists, the relevant Participating Parties will, at their expense and to the extent reasonably practicable (as determined by a majority of the disinterested trustees), take whatever steps are necessary to remedy or eliminate the material irreconcilable conflict. These steps may include: (a) Withdrawing the assets allocable to some or all of the Separate Accounts of the participating insurance companies from the affected Fund or any series thereof and reinvesting these assets in a different investment medium (including another series, if any, of such Fund) or submitting the question of whether such segregation should be implemented to a vote of all affected contract owners and, as appropriate, segregating the assets of any appropriate group (*i.e.,* annuity contract owners, life insurance contract owners, or variable contract owners of one or more participating insurance companies) that votes in favor of such segregation, or offering to the affected contract owners the option of making such a change; (b) withdrawing the assets allocable to some or all of the participating Qualified Plans from the relevant Fund and reinvesting those assets in a different investment medium; and (c) establishing a new registered management investment company or managed separate account. If a material irreconcilable conflict arises because of an insurer's decision to disregard contract owner voting instructions and that decision represents a minority position or would preclude a majority vote, the insurer may be required, at the Fund's election, to withdraw its Separate Account's investment in the Fund, and no charge or penalty will be imposed as a result of the withdrawal.

The responsibility of taking remedial action in the event of a Board determination of a material irreconcilable conflict and to bear the cost of such remedial action will be a contractual obligation of all Participating Parties under their participation agreements and these responsibilities will be carried out with a view only to the interests of the contract owners and participants in Qualified Plans, as applicable.

5. For the purposes of condition 4, a majority of the disinterested members of the Board of the affected Fund will determine whether or not any proposed action adequately remedies any material irreconcilable conflict, but in no event will the Fund or the Advisor be required to establish a new funding medium for any Variable Contract or Qualified Plan. No participating insurance company will be required by condition 4 to establish a new funding medium if an offer to do so has been declined by a vote of a majority of contract owners materially adversely affected by the material irreconcilable conflict. No Qualified Plan will be required by condition 4 to establish a new funding medium for the Plan if: (a) a majority of Plan participants materially and adversely affected by the material irreconcilable conflict vote to decline the offer; or (b) pursuant to governing Plan documents and applicable law, the Plan makes the decision without a vote of Plan participants.

6. A Board's determination of the existence of a material irreconcilable conflict and its implications will be made known promptly in writing to the Adviser and all Participating Parties.

7. As to Variable Contracts issued by Separate Accounts, participating insurance companies will provide pass-through voting privileges to all contract owners so long as and to the extent that the Commission continues to interpret the 1940 Act to require pass-through voting privileges for Variable Contract owners. As to Variable Contracts issued by unregistered separate accounts, pass-through voting privileges will be extended to participants to the extent granted by the issuing insurance company. Participating insurance companies will be responsible for assuring that each of their registered Separate Accounts participating in a Fund calculate voting privileges as instructed by a Fund with the objective that each such participating insurance company calculate voting privileges in a manner consistent with other participating insurance companies. The obligation to calculate voting privileges in a manner consistent with all other Separate Accounts investing in a Fund will be a contractual obligation of all participating insurance companies under their participating agreements. Each participating insurance company will vote Fund shares held by Separate Accounts for which it has not received voting instructions, as well as shares attributable to it, in the same proportion as it votes shares for which it has received voting instructions. Each Qualified Plan will vote as required by applicable law and governing Plan documents.

8. Each Fund will comply with all provisions of the 1940 Act requiring voting by shareholders (which, for these purposes, will be the persons having a voting interest in the Fund's shares). In particular each Fund will either provide for annual meetings (except insofar as the Commission may interpret section 16 not to require such meetings) or, if annual meetings are not held, comply with section 16(c) of the 1940 Act (although the Trust is not, and the Funds may not be, one of the trusts described in section 16(c) of the 1940 Act), as well as sections 16(a) and, if and when applicable, 16(b). Further, the Funds will act in accordance with the Commission's interpretation of the requirements of Section 16(a) with respect to periodic elections of Trustees and with whatever rules the Commission may promulgate with respect thereto.

9. The Funds will notify all participating insurance companies that prospectus disclosure regarding potential risks of mixed and shared funding may be appropriate. A Fund will disclose in its prospectus that: (a) Shares of the Fund are offered to insurance company separate accounts offered by various participating insurance companies which fund both annuity and life insurance contracts and to Qualified Plans; (b) due to differences in tax treatment or other considerations, the interests of various contract owners participating in the Fund and the interests of Qualified Plans investing in the Fund might at some time conflict; and (c) the Board will monitor for any material conflicts and determine what action, if any, should be taken.

10. No less than annually, the Participating Parties and/or the Adviser will submit to the Boards such reports, materials or data as each Board may reasonably request so that the Boards may carry out fully the obligations imposed upon them by the conditions contained in the Application. These reports, materials and data shall be submitted more frequently if deemed appropriate by the Boards. The obligations of the Participating Parties to provide these reports, materials and data to the Boards will be a contractual obligation of all Participating Parties under the participation agreements.

11. All reports received by a Board of potential or existing conflicts, and all Board action with regard to determining the existence of a conflict, notifying the Adviser or Participating Parties of a conflict, and determining whether any proposed action adequately remedies a conflict, will be properly recorded in the minutes of the Board or other appropriate records, and these minutes or other records will be made available to the Commission upon request.

12. If and to the extent Rule 6e–2 and Rule 6e–3(T) are amended, or Rule 6e–3 is adopted, to provide exemptive relief from any provision of the 1940 Act or the rules thereunder with respect to mixed or shared funding on terms and conditions materially different from those of any exemptions granted in the order requested in the Application, then the Funds and/or the Participating Parties, as appropriate, shall take such steps as may be necessary to comply with Rule 6e–2 and Rule 6e–3(T), as amended, and Rule 6e–3, as adopted, to the extent these rules are applicable.

13. In the event that a Qualified Plan should ever become an owner of 10% or more of the assets of a Fund, such Qualified Plan will execute a participation agreement with the Fund. A Qualified Plan will execute a certification containing an acknowledgment of this condition at the time of its initial purchase of shares of each Fund.

Conclusion

For the reasons summarized above, Applicants assert that the requested exemptions are appropriate in the public interest and consistent with the protection of investors and the purposes fairly intended by the policy and provisions of the 1940 Act.

For the Commission, by the Division of Investment Management, pursuant to delegated authority.

Margaret H. McFarland,

Deputy Secretary.

[FR Doc. 99–7956 Filed 3–31–99; 8:45 am]

BILLING CODE 8010–01–M

SECURITY AND EXCHANGE COMMISSION

[Docket No. IC–23765]

Notice of Application for Deregistration under Section 8(f) of the Investment Company Act of 1940

March 26, 1999.

The following is a notice of applications for deregistration under

section 8(f) of the Investment Company Act of 1940 for the month of March 1999. A copy of each application may be obtained for a fee at the SEC's Public Reference Branch, 450 Fifth St., N.W., Washington, DC 20549–0102 (tel. 202–942–8090). An order granting each application will be issued unless the SEC orders a hearing. Interested persons may request a hearing on any application by writing to the SEC's Secretary at the address below and serving the relevant applicant with a copy of the request, personally or by mail. Hearing requests should be received by the SEC by 5:30 p.m. on April 20, 1999, and should be accompanied by proof of service on the applicant, in the form of an affidavit or, for lawyers, a certificate of service. Hearing requests should state the nature of the writer's interest, the reason for the request, and the issues contested. Persons who wish to be notified of a hearing may request notification by writing to the Secretary, SEC, 450 Fifth Street, N.W., Washington, DC 20549–0609. For Further Information Contact: Diane L. Titus, at (202) 942–0564, SEC, Division of Investment Management, Office of Investment Company Regulation, Mail Stop 5–6, 450 Fifth Street, N.W., Washington, DC 20549–0506.

Kemper Gold Fund [File No. 811–6334]

Summary: Applicant seeks an order declaring that it has ceased to be an investment company. On July 31, 1991, applicant made a liquidating distribution to its shareholders at net asset value per share. Expenses incurred in connection with the liquidation were $7,000 and were borne by applicant and Kemper Financial Services, Inc., the applicant's investment adviser.

Filing Dates: The application was filed on December 10, 1997, and amended on February 16, 1999.

Applicant's Address: 222 South Riverside Plaza, Chicago, IL 60606.

Kemper Environmental Services Fund [File No. 811–6060]

Summary: Applicant seeks an order declaring that it has ceased to be an investment company. On August 26, 1994, applicant transferred all of its assets, less reserves for debt, to the Kemper Technology Fund in exchange for Class A shares based on net asset value per share. Expenses incurred in connection with the merger were $28,000 and were borne by applicant.

Filing Dates: The application was filed on December 10, 1997, and amended on February 16, 1999.

Applicant's Address: 222 South Riverside Plaza, Chicago, IL 60606–5808.

Kemper Government Money Market Fund [File No. 811–3316]

Summary: Applicant seeks an order declaring that it has ceased to be an investment company. On November 14, 1986, applicant was reorganized into the Government Securities Portfolio of Kemper Money Market Fund (now Zurich Money Funds) and transferred all of its assets and liabilities to the Government Securities Portfolio in exchange for shares based on net asset value per share. Expenses incurred in connection with the reorganization were $30,000 and were borne by applicant.

Filing Dates: The application was filed on December 10, 1997, and amended on February 16, 1999.

Applicant's Address: 222 South Riverside Plaza, Chicago, IL 60606–5808.

Kemper New York Tax-Free Fund [File No. 811–4411]

Summary: Applicant seeks an order declaring that it has ceased to be an investment company. Applicant was reorganized as the New York Portfolio, a series of Kemper State Tax-Free Income Fund, and, on July 27, 1990, transferred all of its assets and liabilities to the New York Portfolio in exchange for shares based on net asset value per share. Expenses incurred in connection with the reorganization were $30,000 and were borne by applicant.

Filing Dates: The application was filed on December 10, 1997, and amended on February 16, 1999.

Applicant's Address: 222 South Riverside Plaza, Chicago, IL 60606–5808.

Dean Witter Retirement Series [File No. 811–6682]

Summary: Applicant seeks an order declaring that it has ceased to be an investment company. By September 14, 1998, each of applicant's eleven series had transferred all of its assets and liabilities to a corresponding series of Morgan Stanley Dean Witter Funds, based on the relative net asset value per share. Expenses of approximately $948,163 were incurred in connection with the reorganization and were borne by Morgan Stanley Witter Advisors Inc., the investment adviser of applicant and each acquiring fund.

Filing Dates: The application was filed on November 25, 1998, and amended on March 5, 1999.

Applicant's Address: Two World Trade Center, New York, New York 10048.

Oppenheimer Time Fund [File No. 811–2171]

Summary: Applicant seeks an order declaring that it has ceased to be an investment company. On June 23, 1995, applicant transferred all of its assets to Oppenheimer Target Fund (''Target Fund''), in exchange for shares of Target Fund, based on the relative net asset values per share. Expenses of approximately $37,326 incurred in connection with the reorganization were paid equally by applicant and the Target Fund.

Filing Dates: The application was filed on November 20, 1998, and amended on March 12, 1999.

Applicant's Address: Two World Trade Center, New York, New York 10048–0203.

SBSF Funds, Inc. (dba Key Mutual Funds) [File No. 811–3792]

Summary: Applicant seeks an order declaring that it has ceased to be an investment company. By March 23, 1998, each of applicant's eight series had transferred all of their assets and liabilities to corresponding series of The Victory Portfolios (the ''Company'') in exchange for shares of the Company based on the relative net asset values. Approximately $107,000 in expenses were incurred in connection with the reorganization and were paid by KeyCorp, a holding company affiliated with Key Asset Management Inc., the investment adviser for applicant and the Company.

Filing Dates: The application was filed on December 8, 1998, and amended on March 8, 1999.

Applicant's Address: 3435 Stelzer Road, Columbus, Ohio 43219.

Dean Witter Global Asset Allocation Fund [File No. 811–7233]

Summary: Applicant seeks an order declaring that it has ceased to be an investment company. On September 21, 1998, applicant transferred its assets and liabilities to Morgan Stanley Dean Witter Strategist Fund (''Strategist''), in exchange for shares of Strategies based on the relative net asset values. Expenses of approximately $88,000 were incurred in connection with the reorganization and were paid by applicant.

Filing Dates: The application was filed on January 19, 1999, and amended on March 19, 1999.

Applicant's Address: Two World Trade Center, New York, New York 10048.

Van Kampen Small Capitalization Fund [File No. 811–6421]

Summary: Applicant seeks an order declaring that it has ceased to be an investment company. On February 12, 1999, applicant made a liquidating distribution to its sole shareholder. Expenses of approximately $450 incurred in connection with the liquidation were paid by Van Kampen Investments Inc., the holding company of applicant's adviser.

Filing Dates: The application was filed on March 4, 1999. Applicant has agreed to file an amendment during the notice period.

Applicant's Address: 1 Parkview Plaza, P.O. Box 5555, Oakbrook Terrace, Illinois 60181.

The Cardinal Group [File No. 811–7588]

Summary: Applicant seeks an order declaring that it has ceased to be an investment company. On September 19, 1998, applicant transferred the assets and liabilities of its six series to corresponding series of Fountain Square Funds in exchange for shares of the corresponding acquiring fund based on net asset value. Expenses of approximately $550,000 were incurred in connection with the reorganization and were paid by Fifth Third Bank, the investment adviser to the acquiring funds.

Filing Dates: The application was filed on March 5, 1999. Applicant has agreed to file an amendment during the notice period.

Applicant's Address: 155 East Broad Street, Columbus, Ohio 43215.

For the Commission, by the Division of Investment Management, pursuant to delegated authority.

Margaret H. McFarland,

Deputy Secretary.

[FR Doc. 99–8063 Filed 3–31–99; 8:45 am]

BILLING CODE 8010–01–M

SECURITIES AND EXCHANGE COMMISSION

[Release No. 34–41211; File No. 600–22]

Self-Regulatory Organizations; MBS Clearing Corporation; Notice of Filing and Order Granting Approval of Extension of Temporary Registration as a Clearing Agency

Marach 24, 1999.

On March 11, 1999, the MBS Clearing Corporation (''MBSCC'') filed[1] with the Securities and Exchange Commission (''Commission'') an application pursuant to Section 19(a) of the Securities Exchange Act of 1934 (''Act'')[2] requesting that the Commission grant MBSCC permanent registration as a clearing agency under Section 17A of the Act or in the alternative extend MBSCC's temporary registration until permanent registration is granted.[3] Because MBSCC's current temporary registration expires on March 31, 1999, the Commission is extending MBSCC's temporary registration as a clearing agency through March 31, 2000, while the Commission completes its review of MBSCC's application for permanent registration. The Commission is publishing this notice and order to solicit comments from interested persons and to extend MBSCC's temporary registration as a clearing agency through March 31, 2000.

On February 2, 1987, the Commission granted MBSCC's application for registration as a clearing agency pursuant to Sections 17A(b)[4] and 19(a)(1)[5] of the Act and Rule 17Ab2–1(c)[6] thereunder for a period of eighteen months.[7] Subsequently, the Commission has extended MBSCC's temporary registration as a clearing agency several times with the most current extension extending MBSCC's temporary registration through March 31, 1999.[8]

As discussed in detail in the original order granting MBSCC 's registration, one of the primary reasons for MBSCC's registration was to enable it to provide for the safe and efficient clearance and settlement of transactions in mortgage-backed securities. Since its original temporary registration order, MBSCC has implemented many improvements and continues to work towards enhancing the safety and efficiency of its operations. For example, during the past year, MBSCC modified its rules to strengthen its processes for liquidating open trades when MBSCC ceases to act for a participant.[9] In addition, MBSCC increased the number of directors on its board of directors from thirteen to fifteen, which allows two additional participants to be represented MBSCC's board.[10]

MBSCC has functioned effectively as a registered clearing agency for over ten years. Accordingly, in light of MBSCC's past performance and the need for continuity of the services MBSCC provides to its participants, the Commission believes that it is necessary and appropriate in the public interest and for the prompt and accurate clearance and settlement of securities transactions to extend MBSCC's temporary registration through March 31, 2000. During this temporary registration period, the Commission anticipates that it will act on MBSCC's application for permanent registration. Any comments received during MBSCC's temporary registration will be considered in conjunction with the Commission's review of MBSCC's request for permanent registration as a clearing agency under Section 17A of the Act.[11]

Solicitation of Comments

Interested persons are invited to submit written data, views, and arguments concerning the foregoing, including whether the proposed rule change is consistent with the Act. Persons making written submissions should file six copies thereof with the Secretary, Securities and Exchange Commission, 450 Fifth Street, NW., Washington, DC 20549. Copies of the submission, all subsequent amendments, all written statements with respect to the request for permanent registration as a clearing agency that are filed with the Commission, and all written communications relating to the extension between the Commission and any person, other than those that may be withheld from the public in accordance with the provisions of 5 U.S.C. 552, will be available for inspection and copying in the Commission's Public Reference Section, 450 Fifth Street, NW., Washington, DC 20549. Copies of such filing also will be available for inspection and copying at the principal office of MBSCC. All submissions should refer to File No. 600–22.

Conclusion

On the basis of the foregoing, the Commission finds the extending MBSCC's temporary registration as a clearing agency is consistent with the

[1] Letter from Anthony H. Davidson, Managing Director and General Counsel, MBSCC (March 11, 1999).

[2] 15 U.S.C. 78s(a).

[3] 15 U.S.C. 78q–1.

[4] 15 U.S.C. 78q–1(b).

[5] 15 U.S.C. 78s(a)(1).

[6] 17 CFR 240.17Ab2–1(c).

[7] Securities Exchange Act Release No. 24046 (February 2, 1987), 52 FR 4218.

[8] Securities Exchange Act Release Nos. 25957 (August 2, 1988), 53 FR 29537; 27079 (July 31, 1989), 54 FR 34212; 28492 (September 28, 1990), 55 FR 41148; 29751 (September 27, 1991), 56 FR 50602; 31750 (January 21, 1993), 58 FR 6424; 33348 (December 15, 1993), 58 FR 68183; 35132 (December 21, 1994), 59 FR 67743; 37372 (June 26, 1996), 61 FR 35281; 38784 (June 27, 1997) 62 FR 36587; and 39776 (March 20, 1998) 63 FR 14740.

[9] Securities Exchange Act Release No. 39747 (March 13, 1999), 63 FR 13712 [File No. FR–MBSCC–97–10].

[10] Securities Exchange Act Release No. 41104 (December 5, 1997), 62 FR 65466 [File No. FR–MBSCC–98–03].

[11] 15 U.S.C. 78q–1.

Act and in particular with Section 17A of the Act.[12]

It is therefore ordered, pursuant to Section 19(a) of the Act, that MBSCC's temporary registration as a clearing agency (File No. 600–22) be, and hereby is, extended through March 31, 2000.

For the Commission by the Division of Market Regulation, pursuant to delegated authority.[13]

Margaret H. McFarland,

Deputy Secretary.

[FR Dos. 99–8064 Filed 3–31–99; 8:45 am]

BILLING CODE 8010–01–M

SECURITIES AND EXCHANGE COMMISSION

[Release No. 34–41217; File No. SR–MSRB–97–16]

Self-Regulatory Organizations; Order Approving Proposed Rule Change by the Municipal Securities Rulemaking Board Relating to Activities of Financial Advisors

March 26, 1999.

I. Introduction

On December 23, 1997, the Municipal Securities Rulemaking Board (''Board'' or ''MSRB''), submitted to the Securities and Exchange Commission (''Commission'' or ''SEC''), pursuant to Section 19(b)(1) of the Securities Exchange Act of 1934 (''Act'')[1] and Rule 19b-4 thereunder,[2] a proposed rule change relating to activities of financial advisors. The Board filed Amendments No. 1[3] and No. 2[4] to the proposed rule change on April 16, 1998 and January 14, 1999, respectively. The proposed rule change, as amended, was published for comment in the **Federal Register** on February 23, 1999.[5]

The Commission received one comment letter on the proposal.[6] the commenter objected to the proposed rule change because it does not require the financial advisor to inform the issuer of its intent to act as remarketing agent on an issue of securities prior to beginning work on that issue. In response, the MSRB stated that financial advisors may not know at the beginning stage of work on an issue whether the issue will be long or short term and whether it will be available to act as a remarketing agent for the issue when it is remarketed.[7] The Commission believes the proposal provides the issuer with sufficient information and time to select a suitable remarketing agent. For these reasons and those set forth below, this order approves the proposed rule change, as amended.

II. Description of the Proposal

Rule G–23,[8] on activities of financial advisors, establishes disclosure and other requirements for dealers that act as financial advisors to issuers of municipal securities. The rule is designed principally to minimize the *prima facie* conflict of interest that exists when a dealer acts as both financial advisor and underwriter with respect to the same issue of municipal securities. Specifically, Rule G–23 requires a financial advisor to alert the issuer to the potential conflict of interest that might lead the dealer to act in its own best interest as underwriter rather than the issuer's best interest.[9]

In certain instances, some financial advisors also have acted as remarketing agents for issues on which they advised the issuer. To address this situation and its potential conflict of interest, a proposed rule change was filed to require a financial advisor, prior to entering into a remarketing agreement for an issue on which it advised the issuer, to disclose in writing to the issuer the terms of the remuneration the financial advisor could earn as remarketing agent on such issue and that there may be a conflict of interest in changing from the capacity of financial advisor to remarketing agent. The proposed rule change also required that the financial advisor receive the issuer's acknowledgment in writing of receipt of such disclosures. Under the proposal, when these requirements are met, a dealer acting as financial advisor for an issue also could serve as remarketing agent for that issue.

Commission staff requested that the proposed rule change be revised to include a provision requiring issuer consent to the dealer's dual role, along with certain other technical language changes.[10] amendment No. 2 revises this proposal to require that a dealer that has a financial advisory relationship with an issuer with respect to a new issue of municipal securities, prior to acting as a remarketing agent for that issue, disclose in writing to the issuer that there may be a conflict of interest in acting as both financial advisor and remarketing agent for the securities with respect to which the financial advisory relationship exists and disclose the source and basis of the remuneration the dealer could earn as remarketing agent on such issue. This written disclosure to the issuer can be in a separate writing provided to the issuer prior to the execution of the remarketing agreement or the disclosure can be in the remarketing agreement. The issuer must expressly acknowledge in writing to the broker, dealer, or municipal securities dealer receipt of such disclosure and consent to the financial advisor acting in both capacities and to the source and basis of the remuneration. If the disclosure is made prior to the execution of the remarketing agreement, the amount of the specific fee paid by the issuer to the remarketing agent still may be negotiated in the remarketing agreement. If the disclosure is made in the remarketing agreement, the dealer will have negotiated the amount of its fee with the issuer.

III. Discussion

The Commission believes that the proposed rule change is consistent with the requirements of the Act and the rules and regulations thereunder.[11] In particular, the Commission finds that the proposed rule change is consistent with Section 15B(b)(2)(C)[12] of the Act. Section 15B(b)(2)(C) of the Act requires, among other things, that the rules of the Board be designed to prevent fraudulent and manipulative acts and practices, to promote just and equitable principles of trade, to remove impediments to and perfect the mechanism of a free and open market, and, in general, to protect investors and the public interest. Specifically, the Commission believes the proposed rule change will prevent fraudulent and manipulative acts and practices and promote just and equitable principles of trade by requiring a dealer that has a financial advisory

---

[12] 15 U.S.C. 78q–1.

[13] 17 CFR 200.30–3(a)(50)(i).

[1] 15 U.S.C. 78s(b)(1).

[2] 17 CFR 240.19b-4.

[3] Amendment No. 1 made certain technical changes are revised statements concerning comments received on the draft amendment published by the Board for comment from its members.

[4] After discussion with Commission staff, the MSRB filed Amendment No. 2 to revise the language of Rule G–23 to address certain disclosure and consent issues raised by the proposed rule change.

[5] *See* Exchange Act Release No. 41053 (Feb. 12, 1999, 64 FR 8894.

[6] Letter from Robert E. Donovan, Executive Director, Rhode Island Health and Educational Building Corporation, to Secretary, SEC, dated March 15, 1999.

[7] Letter from Ronald W. Smith, Senior Legal Associate, MSRB, to Sonia Patton, Attorney, SEC, dated March 22, 1999.

[8] *MSRB Manual,* General Rules, Rule G–23 (CCH) ¶3611.

[9] *See supra* note 8.

[10] *See supra* note 4.

[11] In reviewing this proposal, the Commission has considered the proposed rule's impact on efficiency, competition, and capital formation. The proposed rule change should improve efficiency and competition because it prevents all municipal securities dealers from acting as both financial advisor and remarketing agent with respect to a new issue of securities without first obtaining the issuer's consent. 15 U.S.C. 78f(b)(7).

[12] 15 U.S.C. 78o–4(b)(2)(C).

relationship with an issuer of securities, prior to acting as remarketing agent for the issuer's securities, to disclose in writing to the issuer that there may be conflict of interest and the source and basis of the remuneration the dealer expects to earn as remarketing agent. This will enable the issuer to assess the conflict of interest, and decide if it wishes to proceed or take other action. The Commission believes the proposed rule change further prevents fraudulent and manipulative acts and practices by requiring the issuer's consent to the dealer acting as remarketing agent and to the source and basis of remuneration. The Commission believes this requirement will enhance the likelihood that a financial advisor who wishes to act as remarketing agent for an issue on which it advised the issuer acts in the issuer's best interest and not its own best interest as remarketing agent.

IV. Conclusion

It is therefore ordered, pursuant to Section 19(b)(2) [13] of the Act, that the proposed rule change, as amended, (SR–MSRB–97–16) is approved.

For the Commission by the Division of Market Regulation, pursuant to delegated authority.[14]

Margaret H. McFarland,

Deputy Secretary.

[FR Doc. 99–8065 Filed 3–31–99; 8:45 am]

BILLING CODE 8010–01–M

[13] 15 U.S.C. 78s(b)(2).

[14] 17 CFR 200.30–3(a)(12).

SECURITIES AND EXCHANGE COMMISSION

[Release No. 34–41212; File No. SR–PCX–99–03]

Self-Regulatory Organizations; Notice of Filing and Immediate Effectiveness of Proposed Rule Change by the Pacific Exchange, Inc., Relating to Fee Schedule Changes

March 24, 1999.

Pursuant to Section 19(b) of the Securities Exchange Act of 1934 (''Act'') [1] and Rule 19b–4 thereunder,[2] notice is hereby given that on February 11, 1999, the Pacific Exchange, Inc. (''PCX'' or ''Exchange'') filed with the Securities and Exchange Commission (''Commission'') the proposed rule change as described in Items I, II, and III below, which Items have been prepared by the Exchange. On March 4, 1999, the Exchange filed as amendment (''Amendment No. 1'') to the proposed rule change.[3] In Amendment No. 1, the Exchange designated the portion of the proposed rule change dealing with customer transaction charges as constituting a ''non-controversial'' rule change under Rule 19b–4(f)(6) under the Act,[4] which renders the part of the proposal effective upon receipt of this filing by the Commission.[5] The Commission is publishing this notice to solicit comments on the proposed rule change from interested persons.

[1] 15 U.S.C. 78s(b)(1).

[2] 17 CFR 240.19b–4.

I. Self-Regulatory Organization's Statement of the Terms of Substance of the Proposed Rule Change

The Exchange is proposing to change its Schedule of Fees and Charges for Exchange Services as discussed below. The text of the proposed rule change is available at the Office of the Secretary, PCX, and at the Commission.

II. Self-Regulatory Organization's Statement of the Purpose of, and Statutory Basis for, the Proposed Rule Change

In its filing with the Commission, the Exchange included statements concerning the purpose of and basis for the proposed rule change and discussed any comments it received on the proposed rule change. The text of these statements may be examined at the places specified in Item IV below. The Exchange has prepared summaries, set forth in sections A, B, and C below, of the most significant aspects of such statements.

[3] *See* letter from Robert P. Pacileo, Staff Attorney, Regulatory Policy, PCX, to Michael A. Walinskas, Deputy Associate Director, Division of Market Regulation (''Division''), Commission, dated March 3, 1999. The Commission received a draft of the proposed amendment on February 26, 1999, which the Commission has accepted as a pre-filing pursuant to Rule 19b–4(f)(6).

[4] 17 CFR 240.19b–4(f)(6).

[5] The Exchange has represented that the proposed rule change will not: (i) Significantly affect the protection of investors or the public interest; (ii) impose any significant burden on competition; and (iii) become operative for 30 days after the date of this filing, unless otherwise accelerated by the Commission. The Exchange also has provided at least five business days notice to the Commission of its intent to file this proposed rule change, as required by Rule 19b–4(f)(6) under the Act. *See* note 3 above. Also, in a telephone conversation on February 26, 1999, between Robert P. Pacileo, Staff Attorney, Regulatory Policy, PCX, and David Sieradzki, Special Counsel, and Joseph Morra, Attorney, Division, SEC, the Exchange requested that the Commission waive the 30-day waiting period under Rule 19b–4(f)(6) for the portion of the filing relating to customer fees.

A. Self-Regulatory Organization's Statement of the Purpose of, and Statutory Basis for, the Proposed Rule Change

1. Purpose

The Exchange proposes four changes to its Schedule of Fees an Charges for Exchange Services by reducing its customer transaction charges, increasing its Market Maker transaction charges and fees, reducing its LMM Book transaction charges, and increasing its Member dues.

Customer Charges. Currently, for manual transactions, the Exchange charges its customers $0.15 per contract side for premiums less than one dollar and $0.35 per contract side for premiums one dollar or greater. For block transactions with premiums one dollar or greater, the Exchange charges its customers $0.35 per contract for the first four hundred contracts of a block trade and $0.25 per contract for all contracts over four hundred. The Exchange charges its customers $0.30 per contract side for Pacific Options Exchange Trading System (''POETS'') transactions, with a minimum charge of $0.35 per trade. Also, the Exchange charges a Book execution fee of $0.45 per contract side for all customer Book executions. To simplify rates and reduce costs for customers, the Exchange proposes to reduce transaction charges for customers to $0.12 per contract side, which will apply to all manual transactions (including block transactions) and POETS automated transactions. Further, the Exchange proposes to reduce Book execution fees to $0.20 per contract side for all Book transactions, except accommodation/liquidation transactions,[6] which remain unchanged. The Exchange proposes to make these changes in an effort to remain competitive, attract customer order-flow, and reduce customer costs.

Market Maker Charges. The current transaction charges for Market Makers are $0.095 per contract site for equity options, $0.11 per contract side for index options, and $0.085 per contract side for POETS transactions. Also, the Exchange currently charges a monthly Market Maker fee of $660, which is applied to all Market Makers after a six-month initial waiver person. The Exchange proposes to increase transaction charges for Market Makers to $0.15 per contract side for all manual and POETS transactions. In addition,

[6] An accommodation/liquidation transaction is a book-executed transaction for a premium less than 1/16th. Telephone conversation between Robert P. Pacileo, Staff Attorney, Regulatory Policy, PCX, and Joseph Morra, Attorney, Division, SEC, on March 23, 1999.

the Exchange proposes to increase Market Maker fees to $1,750 per month per Market Maker, and proposes to eliminate the initial six-month waiver period. The Exchange proposes these changes to offset revenues lost from customer rate reductions.

LMM Book Charges. The Exchange charges each Lead Market Maker (''LMM'') $0.10 per Book contract for the first 15,000 contracts, $0.20 for 15,001 to 30,000 Book contracts, $0.30 for 30,001 to 55,000 Book contracts, and $0.20 for all Book contracts over 55,000. These charges are applied to the monthly total of all Book contracts in all options issues collectively traded by an LMM under the program. The Exchange proposes to reduce its per Book contract rates to $0.05 per Book contract for the first 15,000 contracts, $0.10 for 15,001 to 30,000 Book contracts, $0.15 for 30,001 to 55,000 Book contracts, and $0.10 for all Book contracts over 55,000. The Exchange proposes these fee changes to reduce charges consistent with the reduction in Book execution fees for customers. In addition, the fee reduction is intended to attract LMMs to participate in the LMM Book Program.

Member dues. Currently, monthly dues for Exchange Members are $250. The Exchange proposes to increase its monthly Member dues to $750 per month to maintain a revenue base for the operations of the Exchange.

2. Basis

The Exchange believes the proposed rule change is consistent with Section 6(b) of the Act,[7] in general, and furthers the objectives of Section 6(b)(4) of the Act,[8] in particular, because it provides for the equitable allocation of reasonable dues, fees and other charges among its Members and issuers and other persons using its facilities.[9]

B. Self-Regulatory Organization's Statement on Burden on Competition

The Exchange does not believe that the proposed rule change will impose any burden on competition that is not necessary or appropriate in furtherance of the purposes of the Act.

C. Self-Regulatory Organization's Statement on Comments on the Proposed Rule Change Received From Members, Participants, or Others

Written comments on the proposed rule change were neither solicited nor received.

[7] 15 U.S.C. 78f(b).

[8] 15 U.S.C. 78f(b)(4).

[9] In reviewing this proposal, the Commission has considered its impact on efficiency, competition, and capital formation. 15 U.S.C. 78c(f).

III. Date of Effectiveness of the Proposed Rule Change and Timing for Commission Action

The proposed rule change relating to membership fees, transaction charges for Market Makers, LMM Book charges, Market Maker fees, and member dues became effective upon filing pursuant to Section 19(b)(3)(A)(ii) of the Act [10] and subparagraph (f)(2) of Rule 19b–4 thereunder.[11]

The portion of the proposed rule regarding customer transaction charges have been filed by the Exchange as a ''non-controversial'' rule change pursuant to Section 19(b)(3)(A)(ii) of the Act [12] and subparagraph (f)(6) of Rule 19b–4 thereunder.[13] Consequently, because the Exchange represents that the foregoing proposed rule change with respect to customer transaction changes: (1) does not significantly affect the protection of investors or the public interest; (2) does not impose any significant burden on competition; and because the Exchange provided the Commission with written notice of its intent to file the proposed rule change at least five days prior to the filing date, it has become effective pursuant to Section 19(b)(3)(A) of the Act and Rule 19b–4(f)(6) thereunder. The Commission finds good cause to permit the proposed rule change relating to customer fees to become operative prior to thirty days from the date of filing [14] because the Commission believes that those portions reducing the fees may increase competition between the options exchanges.

IV. Solicitation of Comments

Interested personal are invited to submit written data, views and arguments concerning the foregoing, including whether the proposal is consistent with the Act. Persons making written submissions should file six copies thereof with the Secretary, Securities and Exchange Commission, 450 Fifth Street, N.W., Washington, DC 20549–0609. Copies of the submission, all subsequent amendments, all written statements with respect to the proposed rule change that are filed with the Commission, and all written communications relating to the proposed rule change between the Commission and any person, other than those that may be withheld from the public in accordance with the provisions of 5 U.S.C. 552, will be available for inspection and copying in the Commission's Public Reference Room. Copies of such filing will also be available for inspection and copying at the principal office of the PCX. All submissions should refer to File No. SR–PCX–99–03, and should be submitted by April 22, 1999.

For the Commission, by the Division of Market Regulation, pursuant to delegated authority.[15]

Margaret H. McFarland,

Deputy Secretary.

[FR Doc. 99–8062 Filed 3–31–99; 8:45 am]

BILLING CODE 8010–01–M

[10] 15 U.S.C. 78f(b)(3)(A)(ii).

[11] 17 CFR 240.19b–4(f)(2).

[12] 15 U.S.C. 78s(b)(3)(A)(ii).

[13] 17 CFR 240.19b–4(f)(6).

[14] The Exchange requested that the Commission waive the 30-day operative period under Rule 19b–4(f)(6) regarding the provision relating to customer fees. *See* footnote 5.

[15] 17 CFR 200.30–3(a)(12).

SECURITIES AND EXCHANGE COMMISSION

[Release No. 34–41210; File No. SR–Phlx–96–14]

Self-Regulatory Organizations; Philadelphia Stock Exchange, Inc.; Order Approving Proposed Rule Change and Notice of Filing and Order Granting Accelerated Approval to Amendment Nos. 3 and 4 to Proposed Rule Change Relating to the Establishment of a Daily Pre-Opening Session for the Matching of Orders at the Volume Weighted Average Price

March 24, 1999.

I. Introduction

On April 29, 1996, the Philadelphia Stock Exchange, Inc. (''Exchange'' or ''Phlx'') submitted to the Securities and Exchange Commission (''Commission''), pursuant to Section 19(b)(1) of the Securities Exchange Act of 1934 (''Act'')[1] and Rule 19b–4 thereunder,[2] a proposed rule change that would establish a daily pre-opening order matching session (''Session'') for the execution of large-sized stock orders at the volume weighted average price (''VWAP™'').[3] The Session would be conducted through the VWAP Trading System (''VTS™''), which would be operated as a facility of the Exchange. The VTS is a system module of the Universal Trading System (''UTS™'') [4] that was developed by Universal

[1] 15 U.S.C. 78s(b)(1).

[2] 17 CFR 240.19b–4.

[3] VWAP™ is a registered trademark of the Dover Group, Inc.

[4] The VTS™ and UTS™ trademarks are the property of Universal Trading Technologies Corporation.

Trading Technologies Corporation (''UTTC'').[5]

On July 26, 1996, the Exchange submitted Amendment No. 1 to the proposed rule change.[6] The proposed rule change, including Amendment No. 1, was published for comment in the **Federal Register** on September 11, 1996.[7] No comments were received on the proposal or Amendment No. 1. The Exchange submitted Amendment No. 2 to the proposed rule change on October 29, 1997.[8] The proposed rule change, as modified by Amendment No. 2, was published for comment in the **Federal Register** on December 31, 1997.[9] No comments were received on Amendment No. 2. On December 14, 1998, the Exchange submitted Amendment No. 3 to the proposed rule change.[10] Finally, on February 12, 1999, the Exchange submitted Amendment No. 4.[11] This order approves the proposed rule change, as amended, and Amendment Nos. 3 and 4 on an accelerated basis.

Under separate cover, the Exchange has requested from the Commission exemptive and interpretive relief regarding Rules 10a–1, 10b–18, 11a2–2(T), 11Aa3–2, and 11Ac1–1 under the Act.[12] The Commission has issued a letter separate from this order that grants the Exchange exemptive relief from Rule 10a–1 and provides interpretive relief regarding Rule 11a2–2(T).[13] In Section III of this order, the Commission addresses the Exchange's interpretive requests regarding Rules 11Aa3–2 and 11Ac1–1. With respect to the Exchange's request concerning Rule 10b–18, the Commission will respond to the Exchange at a later date.

II. Description of the Proposal

The Exchange seeks to adopt proposed Exchange Rule 237, ''The Universal Trading System Morning Session,'' to govern the operation of the VTS or ''System'' [14] for a one year pilot period. During the Session, the System will electronically accept large-sized stock orders and match the orders for execution according to an algorithm developed by UTTC. The matched and executed orders will be assigned a final VWAP after the close of regular trading. UTTC developed the System pursuant to an agreement with the Exchange. The System will operate as a facility of the Exchange under Section 3(a)(2) of the Act.[15] Specifically, the System will utilize Exchange equipment and personnel,[16] floor trader participation, and the Stock Clearing Corporation of Philadelphia (''SCCP'') to process System trades. Matches performed during the Session will be regulated and reported as Exchange trades. In addition, matches performed by the System will be subject to transaction and access fees as established in the Exchange's fees schedule.[17]

A. Stocks Eligible for Matching During the Session

Approximately 300 of the most highly-capitalized and highly-liquid securities that trade on the New Stock Exchange (''NYSE'') will be eligible for matching during the Session. To select these stocks, the Exchange will use Standard and Poor's market data to identify the top 400 NYSE-listed issues in terms of market capitalization. Each stock selected must have a market price below $200 per share. Next, the Exchange will rank the 400 stocks according to their average dollar volumes over the previous 20 days of trading. The Exchange will designate the top 300 stocks as eligible for matching during the Session. The Exchange will repeat this screening process every six months to ensure that the stocks eligible for matching by the System are highly-capitalized and highly-liquid.

B. System Participants

Access to the System will be limited to ''Committers'' and ''Users'' (collectively ''Participants''). Committers will be permitted to enter ''Commitments'' while Users will be allowed to enter ''Orders.'' Although Exchange members may participate as either Committers or Users, they may not participate as both Committer and or Users, they may not participate as both Committer and User in the same security for the same account during the same Session.

1. Committer

''Committer'' status will be restricted to Exchange members that are: (i) Phlx Floor Traders (*i.e*, Phlx Specialist or Phlx Alternate Specialist in the eligible stock that is the subject of the

[5] UTTC is a subsidiary of the Ashton Technology Group. UTTC has developed three electronic trading system modules as part of its UTS architecture: (i) the VWAP Trading System (''VTS™''); (ii) the Electronic Auction System (''eAS™''); and (iii) the Electronic Public Limit Order Book (''ePLOB™''). This proposed rule change relates only to the VTS.

[6] Amendment No. 1 discussed then proposed reporting procedures and mechanisms relating to Nasdaq Stock Market issues that would be matched during the Session. *See* Letter from Gerald D. O'Connell, Senior Vice President, Market Regulation and Trading Operations, Exchange, to Jennifer Choi, Attorney, Division of Market Regulation (''Division''), Commission, dated July 26, 1996. Amendment No. 1 is of no import because the proposed rule change has been revised such that Nasdaq Stock Market issues are no longer eligible for matching during the Session.

[7] Securities Exchange Act Release No. 37640 (Sept. 4, 1996), 61 FR 47993 (Sept. 11, 1996).

[8] In Amendment No. 2, the Exchange: (1) clarified the responsibilities and functions of the Exchange and the VTS; (2) excluded over-the-counter securities (*i.e.*, Nasdaq Stock Market issues) from matching during the Session; (3) proposed that a VTS terminal be located on the Exchange's equity trading floor; (4) prohibited Exchange floor members from VTS matching in non-specialty issues; (5) revised and detailed matching priority provisions; (6) updated order types and order entry procedures; (7) clarified participation and subscriber access; (8) defined the ''extraordinary circumstances'' under which the Exchange may modify the order entry time period; and (9) specified the liability of the Exchange with respect to the operation of the VTS. *See* Letter and attachment from Philip H. Becker, Senior Vice President and General Counsel, Exchange, to Belinda Blaine, Associate Director, Division, Commission, dated October 28, 1997.

[9] Securities Exchange Act Release No. 39481 (Dec. 22, 1997), 62 FR 68339 (Dec. 31, 1997).

[10] In Amendment No. 3, the Exchange represented that UTTC agreed to operate the VTS through UTTC's wholly-owned broker-dealer subsidiary, REB Securities (''REB''), and that REB would be responsible for conducting compliance activities relating to the VTS. In addition, the Exchange: (1) agreed to operate the VTS as a facility of the Exchange for a one year pilot period; (2) agreed to limit the securities eligible for matching through the VTS to 300 of the most highly-liquid and highly-capitalized issues listed on the New York Stock Exchange; (3) proposed to delete the required dissemination of a single volume print at 9:20 A.M.; (4) clarified the proposed definition of ''institution''; (5) committed to prepare a report regarding the number of tape corrections and how they affect the VWAP values calculated by the Exchange; and (6) modified from 4:02 P.M. to 4:01:30 P.M. the cut-off time that is designed to capture trade reporting run-off and any sales that occur at the close of regular trading. *See* Letter and attachment from Edith Hallahan, First Vice President and Deputy General Counsel, Exchange, to Michael Walinskas, Deputy Associate Director, Division, Commission, dated December 11, 1998.

[11] In Amendment No. 4, the Exchange agreed to report pre-opening VWAP volumes for each eligible security in which matches had been effected during the Session. The Exchange also separately submitted confidential surveillance procedures. *See* Letter from Adrienne Y. Hart, Vice President, Market Surveillance, Exchange, to Michael Walinskas, Deputy Associate Director, Division, Commission, and John A. McCarthy, Assistant Director, Office of Compliance Inspections and Examinations (''OCIE'', Commission, dated February 8, 1999; and letter from Kenneth J. Meaden, Senior Vice President, Exchange, to John McCarthy, OCIE, Commission, dated February 1, 1999.

[12] *See* Letter from Edith Hallahan, Associate General Counsel, Exchange, to Larry E. Bergmann, Associate Director, Division, Commission, dated June 5, 1998.

[13] *See* Letter from Larry E. Bergmann, Associate Director, Division, Commission, to Edith Hallahan, Associate General Counsel, Exchange, dated March 24, 1999 (''Exemptive Relief Letter'').

[14] For ease of reference, the term ''System'' shall be used in place of VTS and UTS.

[15] 15 U.S.C. 78c(a)(2).

[16] UTTC technical personnel will assist the Exchange in operating the System.

[17] Apart from adopting proposed Exchange Rule 237, the Exchange also seeks to make a conforming change to Exchange Rule 101, ''Hours of Business'' to include the Session as an exception to regular trading hours.

Commitment); or (ii) Phlx Off-Floor Liquidity Providers (members that commit to provide contra-side liquidity). Committers agree to provide on a proprietary basis contra-side liquidity by specifying their Committments; however, Off-Floor Liquidity Providers can only engage as Committers for their proprietary accounts.

Exchange members must register with the Exchange prior to acting as a Committer. Committers will be permitted to designate the eligible issues for which they wish to make Commitments. For each eligible issue selected, Committers will be required to provide a minimum volume guarantee of 2,500 shares for each side of the market.[18] All Commitments must be entered in 500 share increments.

Commitments must be entered directly by System subscribers or through the System's trading floor terminal at the Exchange.[19] Commitments may be entered and modified during the ''Order Entry Time Period'' (5:00 A.M. to 9:15 A.M.).[20] and during any other periods the Exchange may specify.[21] Commitments may be entered as ''day-Commitments'' or ''good-till-canceled (''GTC'') Commitments.'' GTC Commitments remain in effect for each Session until canceled and must be established (and canceled) through the enrollment process.[22]

Commitments may be restricted to execution against non-members only. At no time will Commitments may be matched with other Commitments. Commitments are executable only through the System.

2. User

''User'' status would be available to Exchange members and non-members. However, Exchange floor members could participate as Users only in their specialty issues. Under the proposal, Orders may only be placed by and for enrolled Users. Users may enter Orders for customer or proprietary (dealer or principal) accounts.

Orders will be eligible for matching by the System only on the day the Order is entered. The minimum size for individual Orders is 5,000 shares. Like Commitments, all Orders must be entered in 500 share increments.

Users may enter Orders directly into System terminals as subscribers or through subscribing brokers; subscribing brokers may be members or non-members. The Exchange has noted, however, that participation through subscribing brokers may affect matching priority.

All non-member Orders entered through a broker must be entered through an Exchange member or through a non-member broker with the appropriate ''give-up agreement'' [23] and ''three-way agreement'' [24] in place. Non-member Orders also may be entered directly by subscribing non-members who have in place with an Exchange member give-up and three-way agreements.[25]

As with all Exchange trades, System matches will require both a Phlx and SCCP member to be involved. Therefore, all Committers and Users must specify both an executing and clearing account during the enrollment process. The Exchange and the SCCP will perform trade reconciliation and confirmation functions. System trades will then be forwarded to the National Securities Clearing Corporation (''NSCC'') for clearance and settlement.[26]

C. Entry of Orders and Commitments

Only Orders and Commitments that are entered through the System will be eligible for matching and execution by the System during the Session. Under no circumstances will Orders or Commitments migrate to the Exchange's regular equity trading session. Because all Orders and Commitments remain anonymous, the identity of Users and Committers will not be revealed to other Participants.

Orders and Commitments will only be accepted into the System from 5:00 A.M. to 9:15:00 A.M. (''Order Entry Time Period''). The Order Entry Time Period ends approximately 15 minutes prior to the opening of the Exchange's regular trading session (9:30 A.M.–4:00 P.M.). However, as previously mentioned, the Exchange may establish a different period for the entry of Orders and Commitments into System's equity trading floor terminal.[27] Orders and Commitments may be canceled [28] or modified before the end of the Order Entry Time Period. Confirmation of the placement and cancellation of an Order

[18] Although the minimum Commitment size on each side of the market is 2,500 shares, a Committer need to make identical Commitments on both sides of the market. For example, a Committer could agree to buy 2,500 shares and sell 5,000 shares at VWAP.

[19] To facilitate Floor Trader participation, the Exchange proposes to install a System terminal on the equity trading floor for the entry and reporting of Orders and Commitments.

[20] Unless otherwise indicated, all times referenced throughout this order are Eastern Standard Times.

[21] For example, the Exchange may allow the entry and modification of Commitments during certain times the previous day, effective for the next day's Session. Because matching occurs only during the Session, the additional period would simply provide extra time for the entry of Commitments.

[22] The enrollment process is the formal mechanism by which Participants enter into a contractual arrangement to use the System. System activation is dependent upon completing the enrollment process and submitting the requisite agreements and forms. Enrollment parameters, including GTC commitments, may be modified through procedures established by the Exchange. Prior to activation, all Users and Committers must provide proof of the review and approval of their enrollment parameters by their compliance officer.

[23] A clearing agreement or ''give-up agreement'' is intended to ensure that a SCCP member, who must also be an Exchange member, has assumed responsibility for the order. Give-up agreements with non-members must be submitted in advance to the Exchange's Examinations Department and must define the credit limits for the customer.

[24] The Exchange, the Exchange/SCCP member, and the non-member User are the parties to a ''three-way agreement.'' Under the agreement, the Exchange member must agree to be jointly and severally liable for actions of the non-member User through the System. In return, the non-member User must agree to adhere to all applicable by-laws and rules of the Exchange. The Exchange clarified that neither it nor the SCCP approves credit limits established by an Exchange/SCCP member for its non-member customer as part of a three-way agreement. *See* Letter from Philip H. Becker, Senior Vice President and Chief Regulatory Officer, Exchange, to Ivette Lopez, Assistant Director, Division, Commission, dated December 10, 1996. The letter also clarified that an Exchange ''clearing member'' is an Exchange member that also is a member of the SCCP.

[25] The Exchange submitted to the Commission a letter stating that the Exchange did not intend for the sample three-way agreement, which was previously provided to the Commission, to be considered part of the Exchange's proposed rule change. *See* Letter from Edith Hallahan, First Vice President and Deputy General Counsel, Exchange, to Michael Walinskas, Deputy Associate Director, Division, Commission, dated March 24, 1999. The letter also represented that the Exchange will withdraw from any final three-way agreement language stating that the Exchange has the right to terminate a User's access to the System ''without prior notice for any reasons or no reason whatsoever.'' The Commission notes that such language raises important issues concerning appropriate access to the System.

[26] The Exchange recently restructured the clearance and settlement business offered through its wholly owned subsidiary, SCCP. The SCCP no longer maintains its continuous net settlement system for conducting settlements between the SCCP and its members. As a result, the SCCP ceased providing the cash settlement services attendant to the settlement process of the Philadelphia Depository Trust Company. However, the SCCP continues to offer limited clearing and settlement services to Exchange members. *See* Securities Exchange Act Release No. 39444 (Dec. 11, 1997), 62 FR 66703 (Dec. 19, 1997).

[27] If the Exchange establishes any alternative time period for the entry of Orders and Commitments, the alternative time period should not allow Orders and Commitments placed through the System's equity trading floor terminal to be entered at a time after which all other methods of access to the System have been closed. For example, it would not be permissible to establish a general cut-off time for Order and Commitment entry of 9:15 A.M. but allow Orders and Commitments to be entered through the System's equity trading floor trading terminal until 9:16 A.M.

[28] Orders and Commitments may be canceled through the System until 9:15:00 A.M. by using the appropriate designator (''CXL'').

or Commitment will occur electronically through the System.

When entering Orders or Commitments, Participants will be required to provide a description of the Order or Commitment, as well as account identification information needed to determine priority and eligibility. Participants must provide the following information when entering an Order or Commitment:

- Buy/Sell designation;
- Volume (number of shares). As previously stated, the minimum size for Commitments is 2,500 shares and the minimum size for Orders is 5,000 shares. All Commitments and Orders must be entered in 500 share increments;[29]
- Stock symbol;
- Participant status: Committer or User;
- Committer account status: Off-Floor Liquidity Provider, Specialist, or Alternate Specialist;
- User account status: Member or non-member, and Order type (basic, cross, facilitation, also including any constraints or restrictions);
- Clearing account number;
- Trade account information (Exchange executing account number); and
- Subscriber identification number.

D. Types of Orders

Users may enter three types of Orders: (i) basic; (ii) cross; and (iii) facilitation. A User may designate its basic and facilitation Orders as either unconstrained (meaning executable to the extent possible) or constrained.

1. Constraints

Two constraints are available to Users in connection with basic and facilitation Orders: all-or-none (''AON'') and minimum-or-none (''MON''). The AON constraint means that the User wants to execute all shares of the Order or none at all. The MON constraint means that the User wants to execute at least a specified number of shares of the Order or none at all.

2. Basic Order

A basic Order is a standard, one-sided Order to buy or sell. A basic Order may be restricted, meaning it is executable against non-members only.

3. Cross Order

A cross Order is a two-sided Order, with both sides comprised of non-member interest, with instructions to match the identified buy-side with the identified sell-side. The two sides making up a cross can be entered separately, with the contra-side identified. If the sizes do not match, the remainder is left unexecuted.

4. Facilitation Order

A facilitation Order is a two-sided Order, with an identified Phlx member on the contra-side to act as a facilitator for that Order, and is known as a ''Guarantor.'' The contra-side may be entered together with, or separate from, the facilitation Order; if the sizes do not match, the remainder is left unexecuted. Facilitation Orders can be submitted on behalf of Phlx members or non-members. Unlike basic orders, facilitation Orders may not be restricted.

Three types of facilitation orders are available to Users: (i) Unconditional facilitation: execute against an identified Guarantor or not at all. This Order is a type of cross involving a Phlx member Guarantor; (ii) conditional facilitation: execute against an identified Guarantor after attempting to be executed against non-members to the extent possible; and (iii) last resort facilitation: execute against an identified Guarantor only after attempting to execute against all other Orders and Commitments to the extent possible.

E. Execution Priority Rules

Orders and Commitments will be matched for execution by the System at approximately 9:16 a.m. Trades matched and executed through the System are printed and cleared as Exchange transactions, executed on the Exchange and processed through SCCP.

1. Orders

Generally, Orders are afforded priority by: (i) Account type (account types are based on status as a Phlx member or non-member, type of non-member account, constraints, and direct subscription versus broker access); (ii) Order size (largest first); and (iii) chronological basis measured by time-of-entry (for Orders of the same account type and size).

2. Commitments

Commitments are prioritized based on: (i) Sub-account types (Phlx Off-Floor Liquidity Providers first, then Specialists, and Alternate Specialists); and (ii) Commitment size (largest first). For Commitments of the same size, priority rotates among Committers with the fewest aggregate shares (in all eligible securities) matched through the System at that time.

3. Liquidity Rotation Parameter

Although priority is generally based on size, the ''Liquidity Rotation Parameter'' (''LRP'') provides that Order and Commitment participation will rotate in 25,000 share increments, as opposed to filling the largest Order or Commitment first. The LRP is intended to ensure fair allocation. The LRP operates within each matching step (after Step 1) to match Orders/Commitments in 25,000 share increments, moving to the next Order/Commitment after 25,000 shares have been matched, and then, after all other Orders/Commitments have received their first 25,000 share match, returning to the unfilled portion of the first Order/Commitment. Under the proposal, the Exchange's Floor Procedure Committee may establish a different LRP size based on operational experience, practicality, and demonstrated market need.

F. The Matching Algorithm

Execution priority is determined in accordance with the matching algorithm that consists of 23 matching steps. In step 1, two-sided Orders are matched in the following order:

- Non-member/Non-member cross Orders.
- Non-member/Member unconditional facilitation Orders.
- Member/Member unconditional facilitation Orders.
- Any unmatched ''residue'' due to the excess size entered by one side remain unexecuted. It is important to remember that Step 1 matches unconditional facilitation Orders.

In step 2, non-member unconstrained Orders (basic and facilitation) are matched with non-member unconstrained Orders. As with all matching steps, priority is determined based on size and time of entry.

In step 3, remaining non-member unconstrained Orders are matched with non-member constrained (AON and MON) Orders. Any non-member constrained Orders not matched with the unconstrained Orders left over from step 1 are then matched with other non-member constrained Orders.

In step 4, remaining non-member Orders are matched with non-member institutions'[30] Orders participating

[29] The Exchange's Floor Procedures Committee may determine whether to establish: (i) alternative minimum sizes for Commitments and Orders; or (ii) alternative minimum increment sizes. Any adjustments to Order, Commitment, or increment sizes are required to be based on market and participant need, and are subject to prior written notice.

[30] The proposal defines an institution as ''an entity not registered as a broker-dealer or doing business as a hedge fund that serves in a fiduciary capacity.'' The Exchange believes such entities include, but are not limited to: qualified pension plans, investment companies registered under the Investment Company Act of 1940, bank trust

through a broker. Such non-member institutions' Orders are then matched with each other. (Non-member institutions entering Orders directly would have participated in steps 2 and 3). It should be noted that constraints are not relevant to determining priority in step 4 among institutions participating through a broker.

In step 5, remaining non-member Orders are matched with non-member non-institution Orders participating through a broker. After non-member non-institution Orders participating through a broker are matched against the unmatched Orders of non-members, such non-member non-institution Orders are matched with each other. (Non-member non-institution Orders include non-member broker-dealer Orders as well as non-member, non-broker-dealer, non-institution Orders, such as retail customers).

In step 6, remaining non-member Orders are matched with Orders of non-member broker-dealers that subscribe directly. Orders of non-member broker-dealers that subscribe directly are then matched with each other. Thus, step 6 matches non-member Orders (both constrained and unconstrained) for non-member broker-dealers. (As opposed to dealer activity, if a non-member broker-dealer is acting as a broker, the Order would already be matched in steps 4 and 5).

By step 7, the matching process is ended with respect to non-member Orders. Any remaining non-member Orders that are restricted to matching with other non-members only are removed. The removed unmatched Orders may be matched later according to step 23.

In step 8, remaining non-member conditional facilitation Orders are matched with their conditional Guarantors (facilitating members). These conditional Orders—which were first subject to matching against other non-member Orders in prior steps—are now eligible for matching against the identified Guarantor (a Phlx member).

In step 9, remaining non-member Orders are matched with member Orders participating through brokers. Any unmatched member Orders participating through brokers are removed.

In step 10, remaining non-member Orders are matched with Orders of off-floor members. Any unmatched off-floor members' Orders are removed.

In step 11, remaining non-member Orders are matched with Orders of Exchange floor members. Any unmatched Exchange floor members' Orders are removed. This includes one-sided Orders (as opposed to Commitments) of Specialists and Alternate Specialists.

In step 12, remaining non-member Orders are matched with Commitments of Exchange Off-Floor Liquidity Providers. Any unmatched Commitments of Exchange Off-Floor Liquidity Providers are removed.

In step 13, remaining non-member Orders are matched with Commitments of Specialists. Any unmatched Specialist Commitments are removed.

In step 14, remaining non-member Orders are matched with Commitments of Alternate Specialists. Any unmatched Alternate Specialist Commitments are removed.

In step 15, remaining non-member Orders are matched with member facilitation Orders (those with conditional or last resort Guarantors). Note that unconditional facilitation Orders previously were matched in step 1.

In step 16, non-member last resort facilitation Orders are matched with their identified last resort Guarantors.

In step 17, non-member matching ends. Any remaining non-member Orders are unmatched, except as provided in step 23.

In step 18, Exchange member conditional facilitation Orders are matched with their identified conditional Guarantors.

In step 19, all remaining Exchange member Orders are matched with each other, provided they are not restricted to matching against non-members only. This includes the following Phlx member Orders: Phlx member Orders participating through brokers, Phlx off-floor member Orders, Phlx floor member Orders, and Phlx member last resort facilitation Orders.

In step 20, remaining Exchange member Orders are matched with Commitments that have not been restricted to matching against non-members only. First, remaining Exchange member Orders are matched with Commitments of Off-Floor Liquidity Providers, and then with Commitments of Specialists and Alternate Specialists. Unmatched Commitments are removed.

In step 21, Exchange member last resort facilitation Orders are matched with their identified last resort Guarantors.

In step 22, the whole matching ''round'' in an eligible security ends. Any remaining Exchange member Orders and Commitments are unmatched, except as provided in step 23.

In step 23, if any unmatched Orders remain, the largest unsatisfied constrained Order is permanently removed, the matches after step 1 are unmatched and the matching process starts again. Among unsatisfied Orders of the same size, Exchange member Orders would be removed before non-member Orders. Among two Exchange members, or among two non-members, the last in time would be removed first. Additional matching rounds would occur, each removing another unsatisfied constrained Order, until no unsatisfied constrained Orders remained. Matching rounds are intended to maximize the number of executions.

G. Calculation of VWAP

The exchange shall calculate a final VWAP value for each eligible security by: (i) using all regular way trades (including sold sales and late sales)[31] reported by the appropriate reporting authority from the opening of the regular trading session and printed prior to 4:15:00 P.M.,[32] (ii) multiplying each respective reported price by the total number of shares traded at that price; (iii) adding together each of these calculated values to compile an aggregate sum; and (iv) dividing the aggregate sum by the total number of reported shares that appear in the prints included in step (i) of the VWAP calculation process. The resulting VWAP value will be reported in the form of a fraction and will be rounded to the nearest 1/256th.[33] Any proposed changes that impact the manner in which the official VWAP is calculated are required to be submitted to the Commission for review under Section 19(b) of the Act.[34]

The exchange shall calculate and assign a final VWAP value to each security subject to a match during the Session.[35] The final VWAP value that the Exchange calculates and assigns to each eligible security shall be reported and publicly disseminated at 4:20 P.M. promptly following calculation. The

departments, corporations that purchase securities for corporate purposes, and insurance companies.

[31] A ''late sale'' is a transaction which is a correct last sale but is publicly disseminated later than is required. Generally, transactions are required to be publicly disseminated within 90 seconds of execution. A ''sold sale'' refers to a transaction appearing on the CTS out of its proper sequence.

[32] It should be noted that prints representing trades executed after regular trading hours (9:30 A.M. to 4:00 P.M.), such as prints reflecting trades executed during the Exchange's Post Primary Session, will only be included in the VWAP calculation until 4:01:30 P.M.

[33] The System software also allows Participants to convert VWAP prices into decimal form.

[34] 15 U.S.C. 78s(b).

[35] In addition, the Exchange will continuously calculate a non-final VWAP value throughout the trading day for each eligible issue.

final VWAP value will be available through the System to all Participants that had a commitment or Order matched during the Session.

The final VWAP value calculated and reported by the Exchange shall be the official VWAP value. Unless the Exchange directs otherwise, every VWAP value as initially reported by the reporting authority is conclusively presumed to be accurate and deemed to be final, even if the VWAP value is revised or subsequently determined to have been inaccurate.

Generally, all System matches create a binding contract. However, in the case where a match occurs during the Session in an eligible security that has not opened for primary market trading by 3:00 P.M., the match will be voided and a report to that effect will immediately be sent through the System to the Participants to the voided match. If an eligible security opens for trading but is the subject of a trading halt and does not resume trading for the remainder of the day, the final VWAP value for any match in that eligible security on that day will be based on the prints that occurred before the trading halt.

H. Reporting of System Transactions and VWAP

All System matches will first be reported to the reporting authority (*i.e.*, Consolidated Tape System or ''CTS'') at 9:20 A.M. as separate volume prints for each eligible security in which matching occurred. The morning print for all System matches will occur by way of an administrative message over the CTS reflecting the VWAP volume in each of the eligible securities. The morning print is intended to provide market participants with VWAP volumes before regular trading commences.

Under normal circumstances, Users and Committers will be notified of their matches by 9:20 A.M. System matches will be reported to the entering subscriber in the form of automated reports reflecting the number of shares matched for each Participant by the System in each issue.

Once the Exchange calculates and assigns a final VWAP value, each Session match constitutes a completed transaction for the purpose of reporting the trade to the appropriate reporting authority. End-of-day prints will normally be reported at 4:20 P.M. following calculation of the final VWAP at 4:15 P.M. The end-of-day prints will be printed on a trade-by-trade basis representing all matches made that morning. Each print will reflect a matched trade and the corresponding VWAP. These trades will be reported to the CTS with the sale condition ''B'' to indicate volume weighted average pricing (the ''B'' will distinguish VWAP trades from other transactions that may possibly be reported after the close such as after-hours, crossing session, or late sales transactions). The Exchange has represented that VWAP trades matched and executed through the System will not impact the determination of the last sale price in an eligible security listed on the NYSE.

The System will not disseminate or disclose Orders or Commitments, including System bid/ask sizes, prior to the Session match, nor System imbalances remaining after the Session match, except to entering Participants.

Because reporting is performed on a trade-by-trade basis, if no System match occurs in an eligible security, a final VWAP for that particular security will not be reported to the CTS for that day.

I. Access to the System

Access to the System for subscribers (both direct subscribers and subscribers acting as brokers) will be available by dial-up into the System utilizing software and log-on procedures that vary depending on whether the subscriber is accessing the System through a personal computer or a main-frame system. System access may include various types of computer hardware, software, and handheld devices.

J. Resolutions of Disputes

Disputes regarding Session participation or the eligibility of Orders, Commitments, or Participants will be resolved by the Exchange in accordance with Exchange Rule 124.

K. Liability of the Exchange

The Exchange shall not be liable for any damages, claims, losses or expenses sustained by a member or member organization caused by any errors, omissions or delays resulting from any act, condition or cause beyond the reasonable control of the Exchange, including but not limited to, an act of God; fire; flood; extraordinary weather conditions; war; insurrection; riot; stride; accident; action of government; communications or power failure; equipment or software malfunction arising from the use of the System, the calculation of the VWAP or any and all other matters respecting the operation of the System or Session.

L. Trading Halts in Eligible Securities

The proposed rule change does not limit the ability of the Exchange to otherwise halt or suspend trading in any eligible stock matched through the System.

M. Extraordinary Circumstances

In the case of ''extraordinary circumstances,'' the Exchange's Floor Procedure Committee may determine to adjust or modify any of the times relating to Order Entry Time Period, the matching period, or any aspect of the transaction reporting procedures. The proposal defines ''extraordinary circumstances'' to include fast market conditions, systems malfunctions, and other circumstances that limit the Exchange's ability to receive, disseminate, or report System information in a timely and accurate manner.

N. Short Sales

Orders and Commitments must be appropriately marked pursuant to Exchange Rule 455 to indicate whether they are short sales. In addition, Orders and Commitments will be exempt from the short sale ''tick test'' restrictions of Exchange Rule 455. Positions resulting from Session matches will be effective for the purpose of determining long or short status for the remainder of the trading day, immediately upon notification of the Participant to a System match, notwithstanding that the VWAP has not yet been determined.

III. Discussion

For the reasons discussed below, the Commission finds that the proposed rule change is consistent with the requirements of the Act and the rules and regulations thereunder applicable to a national securities exchange, and with the requirements of Sections 6(b) and 11A under the Act.[36] In particular, the Commission believes the proposed rule change is consistent with the Section 6(b)(5) requirements that the rules of an exchange be designed to promote just and equitable principles of trade, remove impediments to and perfect the mechanism of a free and open market and a national market system, and, in general, protect investors and the public interest.[37]

The Commission believes the Exchange's proposed System will serve as an innovative complement to the Exchange's existing auction market. The Commission historically has encouraged innovation and the creation of new electronic trading systems so that investors are provided access to a variety of execution alternatives. At the

[36] 15 U.S.C. 78f(b) and 78k-1.

[37] In approving this proposed rule change, the Commission has considered the proposal's impact on efficiency, competition, and capital formation. 15 U.S.C. 78c(f).

same time, the Commission believes it is important to ensure that a trading system which operates as a facility of a national securities exchange complies with the Act's standards regarding investor protection and fair and orderly markets. The Commission believes that the Exchange's proposal achieves this objective.

Some aspects of the proposal raise complicated regulatory issues. For example, the matching of Orders and Commitments during the Session includes some characteristics of a unitary call market and, therefore, represents a departure from the traditional auction market trading conducted on the Exchange floor. In addition, the System allows non-Exchange members to enter Orders. Other aspects of the proposal raise concerns regarding surveillance, reporting, transparency, control and access, and priority principles of an auction market. After careful review, and for the reasons discussed in more detail below, the Commission believes the proposal adequately addresses the areas of concern and is consistent with the maintenance of free and open markets and investor protection in accordance with Section 6(b)(5) of the Act.[38]

The Commission believes that the System is properly regulated as a facility of the Exchange.[39] The System will use Exchange equipment and personnel, involve the participation of Exchange floor traders, and rely on the SCCP to clear System trades. Furthermore, matches performed during the Session will be regulated and reported as Exchange trades. The Commission believes that because the System will be using the Exchange's premises, property, and services for effecting and reporting System matches, it will be using the facilities of an exchange as defined in Section 3(a)(2) of the Act.[40]

The Commission notes that the Exchange's use of UTTC personnel and equipment in operating the System does not alter the Commission's determination that the System is properly regulated as a facility of the Exchange. The Exchange retains regulatory control over the System and is fully responsible for ensuring that the System complies with the federal securities laws and all applicable rules and regulations. Although UTTC personnel shall assist the Exchange in operating the System, these assistants will be acting as agents of the Exchange. Therefore, the Exchange will maintain control of the System and will exercise authority over the non-Exchange employees that help operate the System.

The Commission believes that operation of the System as a facility of the Exchange raises important issues regarding surveillance of the System,[41] UTTC personnel, and Exchange personnel. The Commission believes the Exchange has adequately addressed these surveillance issues. In particular, the Exchange's surveillance group will be equipped with technology to create detailed audit trails that will track Orders and Commitments from entry to the confirmation of matching. The Exchange also will use technology to track Orders and Commitments through the matching algorithm; this will identify the exact point at which Orders and Commitments are matched, or alternatively, not matched. In addition, a corrections alert mechanism will provide notice of all corrections that occur in the CTS after the VWAP calculation period. Finally, Exchange surveillance personnel will use an electronic surveillance system to identify aberrant trading behavior in any eligible stock matched through the System.

The Commission also believes that operation of the System as a facility of the Exchange raises unique concerns regarding access to, and control of, the System.[42] For several reasons, the Commission believes that the Exchange the UTTC have adequately addressed these access and control concerns. First, the Commission notes that the Exchange will retain regulatory control over the System and that the Exchange will remain fully responsible for ensuring that the System complies with the federal securities laws and all applicable rules and regulations. Although the Exchange will use UTTC personnel and equipment to assist in operating the System, such UTTC assistance will be provided on an agency basis. More specifically, this assistance will be provided by REB securities, a wholly owner broker-dealer subsidiary of UTTC. REB will be assigned certain responsibilities for ensuring compliance with the monitoring and reporting of System access and control parameters. The Exchange represented that REB has developed a special compliance program to address these issues. Second, REB will not conduct any other securities business outside of its oversight of System access and control. This limitation on business activity will help focus REB's scrutiny on important compliance issues. This limitation on business activity will help focus REB's scrutiny on important compliance issues. The Exchange will require REB to conduct annual independent audits regarding the System compliance program. Finally, because REB is a broker-dealer registered under the Act, the Commission will have the authority to inspect and examine REB. For these reasons, the Commission believes the Exchange and UTTC have adequately addressed issues relating to control and access.

The Commission believes that in providing non-Exchange members limited access to the System, the Exchange's proposal does not contravene the Act. The Act contemplates that transactions on a national securities exchange will be conducted by ''members.''[43] In

[38] 15 U.S.C. 78f(b)(5).

[39] Section 3(a)(2) of the Act states that ''[t]he term 'facility' when used with respect to an exchange includes its premises, tangible or intangible property whether on the premises or not, any right to the use of such premises or property or any service thereof for the purpose of effecting or reporting a transaction on an exchange (including, among other things, any system of communication to or from the exchange, by ticker or otherwise, maintained by or with the consent of the exchange), and any right of the exchange to the use of any property or service.'' 15U.S.C. 78c(a)(2).

[40] Regulating the System as a facility of the Exchange is consistent with the Commission's approach towards similar electronic matching systems. For example, the Chicago Stock Exchange (''CHX'') operated the Chicago Match as a facility of the CHX. *See* Securities Exchange Act Release No. 35030 (Nov. 30, 1994), 59 FR 63141 (Dec. 7, 1994). The Chicago Match, which integrated an electronic order match system with a facility for brokering trades, no longer operates as a facility of the CHX.

[41] The System will link off-floor and on-floor computer terminals to the System's communications base unit. This unit will: (i) accept Orders and Commitments; (ii) match buyers with sellers; (iii) give execution reports to matched Participants; (iv) calculate the back-up VWAP for each matched security (separate Exchange systems will calculate the official VWAP; (v) report VWAP matches to the entering Participants (separate Exchange systems will report VWAP matches to the appropriate reporting authorities); and (vi) create an audit trail by recording Order and Commitment entry and execution.

[42] The VTS is the first electronic system offering VWAP that will operate as a facility of a national securities exchange. Although the Commission previously reviewed electronic systems that offered volume weighted average pricing features, they were operated as proprietary trading systems. *See* Letter from Alden S. Adkins, Chief, Office of Automation and International Markets, Division, Commission, to Charles R. Hood, Vice President and General Counsel, Instinet Corporation (Dec. 6, 1991) (providing no-action relief to Instinet's Market March crossing service) and letter from Alden S. Adkins, Chief, Office of Automation and International Markets, Division, commission, to Lloyd H. Feller, Morgan, Lewis & Bockius (Oct. 28, 1991) (providing no-action relief to POSIT regarding its volume weighted average pricing mechanism).

[43] Section 3(a)(3)(A) of the Act describes a member in terms of effecting transactions on a national securities exchange. The pertinent text defines a member as ''any natural person permitted to effect transactions on the floor of the exchange

Continued

addition, Section 6(c)(1) of the Act states that a national securities exchange shall deny membership to any natural person who is not, or is not associated with, a registered broker or dealer.[44] The Commission believes the Exchange has established adequate controls over non-member access to the System. Specifically, a non-member may enter Orders through the System only after entering into a ''give-up'' agreement with an Exchange clearing member (*i.e.*, such Exchange member also is a SCCP member). The give-up agreement requires the Exchange clearing member to assume legal responsibility for the Orders of the non-member. The Exchange clearing member must submit the give-up agreement to the Exchange in advance of any activity by the non-member and must also specify the credit limits for the non-member.

Moreover, prior to obtaining permission to enter Orders through the System, each non-member must enter into a ''three-way agreement'' with the Exchange and an Exchange clearing member. The three-way agreement requires the non-member to agree to adhere to the applicable rules of the Exchange. Because the access of non-member Users is limited by the requirement that such Users be parties to valid give-up and three-way agreements,[45] and because the behavior of non-member Users is governed by the affirmative obligations contained in the mandated give-up and three-way agreements, the Commission believes the participation of non-members in the System does not violate the Act.

The Commission also believes that the Exchange's proposal is consistent with Section 11A of the Act.[46] Specifically, the Commission believes that the System will further the purposes of Section 11A and the development of a national market system by promoting economically efficient execution of securities transactions, fair competition among markets, best execution of customer orders, and an opportunity for orders to be executed without the participation of a dealer. The System provides a new and potentially efficient way to match and execute trading interests. It is principally designed to meet the demands of institutional traders and other market professionals that desire VWAP-based transactions. Use of the System may result in enhanced liquidity for investors and increase the ability of investor orders to interact directly with other investor orders.

The Commission believes the System may provide benefits to market participants, especially those who trade in large blocks. Specifically, Participants will enjoy complete end-to-end anonymity in their Orders and Commitments; as a result, their proprietary trading strategies will not be revealed to other market participants. Furthermore, because Participants receive notice of Order and Commitment matches before the NYSE opens for trading, those Participants not receiving matches will have the opportunity to enter orders during regular trading hours.

The Commission believes the proposal is consistent with Rule 11Aa3–1 of the Act.[47] Promptly after the System matches Orders and Commitments, each Participant will be notified of the issues and number of shares matched for that Participant. The Exchange also will report to the CTS at 9:20 A.M. the VWAP transaction volume in each eligible issue. For example, if during the Session matches were effected in all 300 eligible securities, the Exchange would report to the CTS the matched volume for each of the 300 securities (*i.e.*, 300 separate volume prints). Although the Final VWAP value for each eligible security will not be calculated until after the closing of trading, the Commission believes it is important that market participants have access to matched VWAP volume before regular trading begins.[48] Once of the final VWAP value has been calculated, each transaction will immediately be reported on a trade-by-trade basis, including the size and final VWAP value, over the Tape B network of the CTS[49] and to the Participants. Thus, the Exchange will provide for the collection and dissemination of transaction reports containing, among other things, the price of the security. The display of Orders and Commitments prior to matching would be impractical; in particular, it would counter the benefits of anonymity afforded by the System.[50] The Commission believes that the System's reporting mechanisms will provide investors with adequate transaction price information in accordance with Rule 11Aa3–1 under the Act.

In response to the Exchange's request for interpretive relief, the Commission confirms that the Exchange will not violate Rule 11Aa3–2 under the Act[51] if the Exchange disseminates last sale data for System matches at 4:20 P.M. Rule 11Aa3–2(d) requires self-regulatory organizations to comply with the terms of any effective national market system plan of which it is a sponsor or participant. The Commission believes that the Exchange will continue to comply with the terms of the CTS national market system plan if the Exchange disseminates reports containing price and volume information for System matches at 4:20 P.M. The Commission notes that a national market system plan is designed to ensure timely dissemination of last sale data. The Commission believes that the Exchange has reporting procedures in place to ensure the timely dissemination of preliminary and last sale data for System matches. In particular, as soon as the matching process has been completed at the end of the Session, the Exchange will report to the CTS the matched VWAP volumes for each eligible security. Furthermore, immediately after the final VWAP values have been determined and assigned, the Exchange will report to the CTS each transaction on a trade-by-trade basis, including the final VWAP value. In each instance, the Exchange has committed to make timely dissemination of important market information. Because the Exchange has arranged for the timely dissemination of preliminary and last sale data, the Commission believes the Exchange will remain in compliance with the CTS national market system plan and will not violate Rule 11Aa3–2.

The Commission believes that the System does not violate Rule 11Ac1–1

without the services of another person acting as broker.'' 15 U.S.C. 78c(a)(3)(A).

[44] 15 U.S.C. 78f(c)(1).

[45] If a non-member User's give-up or three-way agreement was terminated, the non-member User would not be permitted to access the System.

[46] 15 U.S.C. 78k–1.

[47] Rule 11Aa3–1, ''Dissemination of Transaction Reports and Last Sale Data with Respect to Transactions in Reported Securities,'' governs the dissemination of transaction reports that contain price and volume information with respect to purchase or sale transactions involving one or more round lots of a security. *See* 17 CFR 240.11Aa3–1.

[48] The Exchange has informed the Commission that the operator of the CTS, the Consolidated Tape Authority (''CTA''), will not permit trade messages to be delivered over the CTS prior to the start of regular trading on the U.S. equities markets (*i.e.*, before 9:30 A.M.). Therefore, the pre-opening VWAP volumes reported over the CTS must take the form of administrative messages. The Commission urges the Exchange to work with the primary information vendors to ensure that the vendors disseminate the VWAP volumes as administrative message before the opening of trading.

[49] As presently configured, the CTS consists of two tape systems: Tape A and Tape B. The Tape A network displays only NYSE symbol information while Tape B displays information for issue listed on all other exchanges. Although each of the securities eligible for matching during the Session are listed on the NYSE, the VWAP matches will be reported on the Tape B network due to programming difficulties and project priorities.

[50] *Cf.* The OptiMark System. *See* Securities Exchange Act Release No. 39086 (Sept. 17, 1997), 62 FR 50036 (Sept. 24, 1997).

[51] 17 CFR 240.11Aa3–2.

under the Act (''Quote Rule'').[52] The Quote Rule requires a national securities exchange to collect bids, offers, quotation sizes, and aggregate quotation sizes from ''responsible brokers or dealers,'' [53] for each reported security listed or admitted to unlisted trading privileges and to make them available to quotation vendors.[54] A bid or offer is defined in the Quote Rule as the ''bid price and offer price communicated by an exchange member or OTC market maker to any broker or dealer, or to any customer.'' [55] To constitute a bid or offer, therefore, the underlying trading interest must have been communicated to at least one other potential counterparty. Bids and offers are intended to attract other parties to deal with the person publishing the bid or offer at the quoted price. In contrast, the essence of the System is its anonymity. Only the System is aware of the expressed trading interest until the matching and trade execution occur. Therefore, the System is not a mechanism by which Participants broadcast prices to other Participants and trade with one another at those prices. Accordingly, the Commission believes that the System does not violate the Quote Rule.

The Commission also believes that the matching algorithm and Liquidity Rotation Parameter are appropriate ways to ensure that Orders and Commitments are matched in accordance with the priority principles of an auction market. The Commission believes that the priority principles of the matching algorithm will not give rise to practices that are inconsistent with Section 11(a) of the Act.[56] Specifically, the matching algorithm is designed to provide public order preference and public order protection such that Exchange members must yield priority to non-members. Moreover, the Exchange has represented that Exchange Specialists will not be permitted to trade ahead of customers because Exchange Floor Traders will be last in terms of priority (*e.g.*, Off-Floor Liquidity Providers receive priority over Floor Traders). In addition, the Liquidity Rotation Parameter, or ''anti-bully'' rule is designed to ensure that order flow is fairly allocated. The LRP will include more Participants in the matching process because the largest Orders and Commitments will be filled in the course of several rotations rather than a single match.

The Commission believes the market characteristics of the eligible stocks will make it difficult to influence their intra-day prices and thus their final VWAP values. Specifically, the 300 stocks eligible for System matching during the one year pilot are among the most highly-capitalized and highly-liquid stocks listed on the NYSE. The significant daily transaction activity in each eligible stock should help to make it difficult and economically impractical to influence their prices. As a caveat, the Commission observes that manipulation concerns would be heightened in the VWAP transaction volume in an eligible security came to represent a substantial portion of the overall transaction volume in such security. The Commission expects the Exchange to closely monitor the VWAP trading volumes for each eligible security in relation to their overall trading volumes. The Commission believes that legitimate manipulation concerns would arise if the VWAP transaction volume in an eligible security exceeded 20% of the security's daily transaction volume.

Finally, the Commission believes it is appropriate that Orders and Commitments will be exempt from the short sale ''tick test'' restrictions of Exchange Rule 455. Separate from this approval order, the Commission has granted the Exchange exemptive relief from Rule 10a–1 under the Act.[57] Under the terms of the Rule 10a–1 exemptive relief, Participants may enter Commitments and Orders to sell short eligible securities provided that certain conditions are satisfied. Therefore, the Commission believes it is appropriate for the Exchange to likewise exempt Participants from the short sale restrictions that appear in Exchange Rule 455.

For the reasons discussed above, the Commission believes it is appropriate to approve the Exchange's proposal for a one year pilot period. As part of the pilot process, the Commission expects the Exchange to collect information pertaining to the operation and effectiveness of the System. The Commission requests that the Exchange use its ongoing research and surveillance to prepare a comprehensive report that: (i) addresses the overall reliability of the System and identifies any System outages or other technical problems, (ii) provides a summary of the Exchange's surveillance efforts regarding the System and identifies any Exchange investigations or enforcement actions involving the System; (iii) discusses the strategies employed by Users and Committers and evaluates whether the System is useful to market participants; (iv) provides feedback from Exchange members and non-members regarding their experiences with the System; and (v) measures the System's impact and effect on trading in the primary market of the eligible securities. In addition, because the Exchange has independently committed to prepare a report regarding the number of tape corrections and how they affect the final VWAP values calculated by the Exchange, that analysis should be included in the report. The Exchange is requested to submit its report on the System no later than two months before the end of the pilot period.

The Commission finds good cause for approving proposed Amendment Nos. 3 and 4 prior to the thirtieth day after the date of publication of notice of filing thereof in the **Federal Register**. The Commission notes that Amendment No. 3 revised the proposed rule change in several ways. First, the Exchange agreed to operate the System as a facility of the Exchange for a one year pilot period. The Commission believes it is appropriate for the Exchange to operate the System on a pilot basis for one year. The pilot period will provide the Exchange with the time necessary to evaluate the effectiveness of the System and to identify and remedy any problems or difficulties that may develop in its operation. Based on the results of the pilot period, the Exchange may propose an extension of the pilot period or seek permanent approval of the System. Second, the Exchange agreed to limit the securities eligible for matching through the System to 300 of the most highly-liquid and highly-capitalized issues listed on the NYSE. The Commission believes it is reasonable for the Exchange to limit the universe of eligible securities to highly-liquid and highly-capitalized securities. The Commission believes that the prices of large, actively traded securities are difficult to impact, and that as a result, the System's VWAP values should be

[52] 17 CFR 240.11Ac1–1.

[53] Rule 11Ac1–1 defines the term ''responsible broker or dealer,'' when used with respect to bids or offers communicated on an exchange, to mean ''any member of such exchange who communicates to another member on such exchange, to the location (or locations) designated by such exchange for trading in a covered [period] security, a bid or offer for such covered [reported] security, as either principal or agent.'' The Rule provides, however, that if ''two or more members of an exchange have communicated on such exchange bids or offers for a covered [reported] security at the same price, each such member shall be considered, a 'responsible broker or dealer' for that bid or offer, subject to the rules of priority and precedence then in effect on that exchange.'' Furthermore, if a member of the exchange represents as agent the transmitted bid or offer of another exchange member, only the member representing the bid or offer as agent shall be considered the ''responsible broker or dealer'' for that bid or offer. 17 CFR 240.11Ac1–1(a)(21)(i).

[54] *See* 17 CFR 240.11Ac1–1(b).

[55] *See* 17 CFR 240.11Ac1–1(a)(4).

[56] 15 U.S.C. 78k(a).

[57] *See* Exemptive Relief Letter *supra* note 13.

less susceptible to manipulation. Third, the Exchange clarified the definition of an ''institution,'' committed to prepare a report regarding the number of tape corrections and how they affect the VWAP values calculated by the Exchange, and modified from 4:02 P.M. to 4:01:30 P.M. the cut-off time designed to capture trade reporting run-off and sales that occur at the close of regular trading. Because each of these revisions strengthens the proposal, the Commission believes they are appropriate modifications.

In Amendment No. 4, the Exchange agreed to report pre-opening VWAP volumes for each eligible security in which matches have been effected during the Session. The Commission believes it is appropriate for the Exchange to report VWAP volumes for eligible securities individually before the start of regular trading. Despite the absence of a final price, the Commission believes that pre-opening volume prints will improve transparency and provide valuable information to market participants. The Commission continues to believe that a single, aggregate VWAP volume print encompassing all eligible securities, as previously proposed by the Exchange, provides little benefit to market participants. Amendment No. 4 also provided improved surveillance procedures. Although the surveillance measures cannot be discussed in specific terms because of their confidential nature, the Commission believes the measures will strengthen the oversight of the System and improve the proposal.

Based on the above, the Commission believes good cause exists, consistent with Sections 6(b) and 19(b) of the Act,[58] to accelerate approval of Amendment Nos. 3 and 4 to the proposed rule change.

IV. Solicitation of Comments

Interested persons are invited to submit written data, views, and arguments concerning Amendment Nos. 3 and 4 to the proposal, including whether the proposed rule change as amended is consistent with the Act. Persons making written submissions should file six copies thereof with the Secretary, Securities and Exchange Commission, 450 Fifth Street, NW., Washington, DC 20549–0609. Copies of the submissions, all subsequent amendment, all written statements with respect to the proposed rule change that are filed with the Commission, and all written communications relating to the proposed rule change between the Commission and any persons, other than those that may be withheld from the public in accordance with the provisions of 5 U.S.C. 552, will be available for inspection and copying in the Commission's Public Reference Section, 450 Fifth Street, NW., Washington, DC 20549. Copies of such filing will also be available for inspection and copying at the principal office of the Exchange. All submissions should refer to File No. SR–Phlx–96–14 and should be submitted by April 22, 1999.

V. Conclusion

The Commission believes the Exchange's proposal satisfies the standards of the Act that apply to national securities exchanges. The Commission recognizes that investors desire to trade large blocks of securities anonymously and free of the price movements that often accompany such transactions. By operating a facility that allows investors to anonymously effect block-sized trades at the day's volume weighted average price, the Exchange will be able to better accommodate the needs of investors.

It is therefore ordered, pursuant to Section 19(b)(2) of the Act,[59] that the proposed rule change (SR–Phlx–96–14), as amended, is approved for a pilot period ending March 24, 2000.

For the Commission, by the Division of Market Regulation, pursuant to delegated authority.[60]

Margaret H. McFarland,

Deputy Secretary.

[FR Doc. 99–8061 Filed 3–31–99; 8:45 am]

BILLING CODE 8010–01–M

[58] 15 U.S.C. 78f(b) and 78s(b).

[59] 15 U.S.C. 78s(b)(2).

[60] 17 CFR 200.30–3(a)(12).

DEPARTMENT OF TRANSPORTATION

Office of the Secretary

[Docket No. OST–98–3648]

Reports, Forms and Recordkeeping Requirements; Agency Information Collection Activity Under OMB Review

AGENCY: Office of the Secretary, DOT.

ACTION: Notice of request for comments.

SUMMARY: Under the Paperwork Reduction Act of 1995 (44 U.S.C. Chapter 35, as amended), before an agency submits a proposed collection of information to OMB for approval, it must publish a document in the **Federal Register** providing a 60-day comment period and otherwise consult with members of the public and affected agencies concerning each proposed collection of information. This notice announces the Department of Transportation's (DOT) intention to request approval of the following collection of information. Interested parties are invited to send comments regarding any aspect of this information collection, including: (1) the necessity and utility of the information collection; (2) the accuracy of the estimated burden; (3) ways to enhance the quality, utility, and clarity of the collected information; and (4) ways to minimize the collection burden without reducing the quality of the collected information. Comments submitted in response to this notice will be summarized and/or included in the request for OMB approval of this information collection.

DATES: Comments must be received on or before June 1, 1999.

ADDRESSES: Comments must refer to the docket and notice numbers cited at the beginning of this notice and be submitted to OST's Docket Management Facility, located on the Plaza Level of the Nassif Building at the U.S. Department of Transportation, Room PL–401, 400 Seventh Street, SW., Washington, DC 20590–0001. The DOT Docket is open to the public from 10 am to 5 pm, Monday through Friday.

FOR FURTHER INFORMATION CONTACT: Blane A. Workie, Office of the General Counsel, Department of Transportation, 400 7th Street, SW., Room 10424, Washington, D.C. 20590, (202) 366–4723.

SUPPLEMENTARY INFORMATION:

Office of the Secretary

Title: The DOT Final Rule on Accessibility of Over-the-Road Buses.

OMB Control Number: 2100–NEW.

Type of Request: Approval of a New Information Collection.

Abstract: The Department of Transportation (DOT), in conjunction with the U.S. Architectural and Transportation Barriers Compliance Board, issued final access regulations for privately-operated over-the-road buses (OTRBs) as required by the Americans with Disability Act (ADA) of 1990. The final rule has four different recordkeeping/reporting requirements. The first has to do with 48 hour advance notice and compensation. The second has to do with equivalent service and compensation. The third has to do with reporting information on ridership on accessible fixed-route buses. The fourth has to do with reporting information on the purchase and lease of accessible and inaccessible new and used buses. The purpose of the information collection requirements is to provide data that the Department can use in its regulatory review and to assist the Department in

its oversight of compliance by bus companies.

(1)(A) Requirement to fill out a form each time there is an advance notice request.

Respondents: Demand-responsive (i.e. charter/tour service) operators. Fixed route companies before fleet becomes fully accessible. Small mixed service operators that choose to provide 48 hour notice.

Estimated Annual Burden on Respondents: 3.3 (low estimate) to 5.0 (high estimate) hours for each of the 3,448 respondents.

Estimated Total Annual Burden: 11,378 (low estimate) to 17,240 (high estimate) hours.

Frequency: 15 times (low estimate) and 23 times (high estimate) in initial year.

(1)(B) Requirement to provide a copy of the form to the passenger when the operator receives a request for accessible bus service.

Respondents: Demand-responsive (i.e. charter/tour service) operators. Fixed route companies before fleet becomes fully accessible. Small mixed service operators that choose to provide 48 hour notice.

Estimated Annual Burden on Respondents: 3.2 (low estimate) to 4.8 hours (high estimate) for each of the 3,448 respondents.

Estimated Total Annual Burden: 11,034 (low estimate) to 16,550 (high estimate) hours.

Frequency: 15 times (low estimate) and 23 times (high estimate) in initial year.

(1)(C) Requirement to provide a copy of the form to the passenger on the scheduled date of trip if the requested accessible bus was not provided.

Respondents: Demand-responsive (i.e. charter/tour service) operators. Fixed route companies before fleet becomes fully accessible. Small mixed service operators that choose to provide 48 hour notice.

Estimated Annual Burden on Respondents: 0.3 (low estimate) to 0.5 hours (high estimate) for each of the 3,448 respondents.

Estimated Total Annual Burden: 1034 (low estimate) to 1724 (high estimate) hours.

Frequency: 1 time (low estimate) to 2 times (high estimate) in initial year.

(1)(D) Requirement to retain one copy of the form for 5 years.

Respondents: Demand-responsive (i.e. charter/tour service) operators. Fixed route companies before fleet becomes fully accessible. Small mixed service operators that choose to provide 48 hour notice.

Estimated Annual Burden on Respondents: 1.9 (low estimate) to 2.9 (high estimate) hours for each of the 3,448 respondents.

Estimated Total Annual Burden: 6,551 (low estimate) to 9,999 (high estimate) hours.

Frequency: 15 times (low estimate) and 23 times (high estimate) in initial year.

(1)(E) Requirement to submit a summary of its form to DOT.

Respondents: Demand-responsive (i.e. charter/tour service) operators. Fixed route companies before fleet becomes fully accessible. Small mixed service operators that choose to provide 48 hour notice.

Estimated Annual Burden on Respondents: 35.4 hours for each of the 3,448 respondents.

Estimated Total Annual Burden: 122,059 hours.

Frequency: Submit summary to DOT annually.

(2)(A) Requirement to fill out a form each time fixed route operator provides equivalent service.

Respondents: Small fixed route operators who choose to provide equivalent service to passengers with disabilities.

Estimated Annual Burden on Respondents: 4.0 (low estimate) to 6.3 (high estimate) hours for each of the 215 respondents.

Estimated Total Annual Burden: 860 (low estimate) to 1,355 (high estimate) hours.

Frequency: 18 times (low estimate) and 28 times (high estimate) in initial year.

(2)(B) Requirement to provide one copy of the form to the passenger.

Respondents: Small fixed route operators who choose to provide equivalent service to passengers with disabilities.

Estimated Annual Burden on Respondents: 3.8 (low estimate) to 5.9 (high estimate) hours for each of the 215 respondents.

Estimated Total Annual Burden: 409 (low estimate) to 1269 (high estimate) hours.

Frequency: 18 times (low estimate) and 28 times (high estimate) in initial year.

(2)(C) Requirement to retain copy for 5 years.

Respondents: Small fixed route operators who choose to provide equivalent service to passengers with disabilities.

Estimated Annual Burden on Respondents: 2.3 (low estimate) to 3.6 (high estimate) hours for each of the 215 respondents.

Estimated Total Annual Burden: 494.5 (low estimate) to 774 (high estimate) hours.

Frequency: 18 times (low estimate) and 28 times (high estimate) in initial year.

(2)(D) Requirement to submit a summary of its form to DOT.

Respondents: Small fixed route operators who choose to provide equivalent service to passengers with disabilities.

Estimated Annual Burden on Respondents: 35.4 hours for each of the 215 respondents.

Estimated Total Annual Burden: 7,611 hours.

Frequency: Submit summary to DOT annually.

(3) Requirement to submit a report to DOT on ridership on accessible fixed route buses.

Respondents: Fixed route operators.

Estimated Annual Burden on Respondents: 35.4 hours for each of the 448 respondents.

Estimated Total Annual Burden: 15,859 hours.

Frequency: Submit report to DOT annually.

(4) Requirement to submit a report to DOT listing the number of accessible and inaccessible new and used buses it has purchased or leased, as well as the total numbers of buses in operators' fleets.

Respondents: All operators.

Estimated Annual Burden on Respondents: 35.4 hours for each of the 3,448 respondents.

Estimated Total Annual Burden: 122,059 hours.

Frequency: Submit report to DOT annually.

The estimated total annual burden resulting from the collection of information in the DOT Final Rule on Accessibility of Over-the-Road Buses is between 298,682 hours (low estimate) to 315,001 hours (high estimate).

Issued in Washington, DC, on March 25, 1999.

Vanester M. Williams,

Clearance Officer, United States Department of Transportation.

[FR Doc. 99–8012 Filed 3–31–99; 8:45 am]

BILLING CODE 4910–62–P

DEPARTMENT OF TRANSPORTATION

Federal Aviation Administration

RTCA, Inc.; Government Industry Free Flight Steering Committee

Pursuant to section 10(a)(2) of the Federal Advisory Committee Act (Pub. L. 92–463, 5 U.S.C., Appendix 2), notice is hereby given for an RTCA Government/Industry Free Flight Steering Committee meeting to be held

April 22, 1999, starting at 1 p.m. The meeting will be held at the Federal Aviation Administration, 800 Independence Avenue, SW., Washington, DC, 20591, in Conference Room 9ABC (ninth floor).

The agenda will include: (1) Welcome and Opening Remarks; (2) Review of Summary of the Previous Meeting; (3) Free Flight Phase 1; (4) Report from FAA Office of Communications, Navigation, Surveillance on (a) Integrated Data Link Schedule and (b) Safe Flight 21; (5) Reports and recommendations from the Free Flight Select Committee; (6) Other Business; (7) Date and Location of Next Meeting; (8) Closing Remarks.

Attendance is open to the interested public but limited to space availability. With the approval of the co-chairmen, members of the public may present oral statements at the meeting. Persons wishing to present statements or obtain information should contact the RTCA, Inc., at (202) 833–9339 (phone), (202) 833–9434 (facsimile), or dclarke@rtca.org (e-mail). Members of the public may present a written statement at any time.

Issued in Washington, DC, on March 25, 1999.

Janice L. Peters,

Designated Official.

[FR Doc. 99–8013 Filed 3–31–99; 8:45 am]

BILLING CODE 4910–13–M

DEPARTMENT OF TRANSPORTATION

Federal Aviation Administration

RTCA Special Committee 135; Environmental Conditions and Test Procedures for Airbone Equipment

Pursuant to section 10(a)(2) of the Federal Advisory Committee Act (Pub. L. 92–463, 5 U.S.C., Appendix 2), notice is hereby given for Special Committee (SC)–135 meeting to be held April 15–16, 1999, starting at 9:00 a.m. The meeting will be held at RTCA, 1140 Connecticut Avenue, NW., Suite 1020, Washington, DC 20036.

The agenda will include: (1) Chairman's Opening Remarks; (2) Introductions; (3) Review and Approval of Minutes of the Previous Meeting; (4) Review Section 8 Proposed Changes; (5) Review Section 16 Proposed Changes; (6) Review Status of Section 20 Working Group; (7) Develop a Milestone Schedule for Release of DO–160D Change 1; (8) New/Unfinished Business; (9) Establish Date for Next Meeting; (10) Closing.

Attendance is open to the interested public but limited to space availability. With the approval of the chairman, members of the public may present oral statements at the meeting. Persons wishing to present statements or obtain information should contact the RTCA Secretariat, 1140 Connecticut Avenue, NW., Suite 1020, Washington, DC 20036; (202) 833–9339 (phone); (202) 833–9434 (fax); or http://www.rtca.org (web site). Members of the public may present a written statement to the committee at any time.

Issued in Washington, DC, on March 25, 1999.

Janice L. Peters,

Designated Official.

[FR Doc. 99–8023 Filed 3–31–99; 8:45 am]

BILLING CODE 4910–13–M

DEPARTMENT OF TRANSPORTATION

Federal Aviation Administration

Notice of Intent To Rule on Application (99–01–C–00–HGR) To Impose and Use a Passenger Facility Charge (PFC) at Hagerstown Regional Airport—Richard A. Henson Field, Hagerstown, MD

AGENCY: Federal Aviation Administration (FAA), DOT.

ACTION: Notice of intent to rule on application.

SUMMARY: The FAA proposes to rule and invites public comment on the application to impose and use a passenger facility charge (PFC) at Hagerstown Regional Airport—Richard A. Henson Field under the provisions of the Aviation Safety and Capacity Expansion Act of 1990 (Title IX of the Omnibus Budget Reconciliation Act of 1990) (Pub. L. 101–508) and part 158 of the Federal Aviation Regulations (14 CFR part 158).

DATES: Comments must be received on or before May 3, 1999.

ADDRESSES: Comments on this application may be mailed or delivered in triplicate to the FAA at the following address: Arthur Winder, Project Manager, Washington Airports District Office, PO Box 16780, Washington, DC 20041–6780.

In addition, one copy of any comments submitted to the FAA must be mailed or delivered to Carolyn S. Motz, Airport Manager, Board of County Commissioners of Washington County, Maryland at the following address: Hagerstown Regional Airport—Richard A. Henson Field, 18434 Showalter Road, Hagerstown, Maryland 21742–1347.

Air carriers and foreign air carriers may submit copies of written comments previously provided to the Board of County Commissioners of Washington County, Maryland under § 158.23 of part 158.

FOR FURTHER INFORMATION CONTACT: Arthur Winder, Program Manager, Washington Airport District Office, PO Box 16780, Washington, DC 20041–6780, (703) 661–1363. The application may be reviewed in person at this same location.

SUPPLEMENTARY INFORMATION: The FAA proposes to rule and invites public comment on the application to impose and use a PFC at Hagerstown Regional Airport—Richard A. Henson Field under the provisions of the Aviation Safety and Capacity Expansion Act of 1990 (Title IX of the Omnibus Budget Reconciliation Act of 1990) (Pub. L. 101–508) and Part 158 of the Federal Aviation Regulations (14 CFR part 158).

On January 28, 1999, the FAA determined that the application to impose and use a PFC submitted by Board of County Commissioners of Washington County, Maryland was substantially complete within the requirements of § 158.25 of part 158. The FAA will approve or disapprove the application, in whole or in part, no later than April 30, 1999.

The following is a brief overview of the application.

PFC Application No.: 99–01–C–00–HGR.

Level of the proposed PFC: $3.00.

Proposed charge effective date: July 1, 1999.

Proposed charge expiration date: November 1, 2003.

Total estimated PFC revenue: $360,000.

Brief description of proposed project(s):

Construct Snow and Equipment Maintenance Building (Impose Only)
Purchase Handicap Lift Device (Impose & Use)
Acquire Rotary Plow (Impose & Use)
Rehabilitate Taxiway G Edge Lighting System (Alternate Project)

Class or classes of air carriers which the public agency has requested not be required to collect PFCs: Air Charter.

Any person may inspect the application in person at the FAA office listed above under **FOR FURTHER INFORMATION CONTACT.**

In addition, any person may, upon request, inspect the application, notice and other documents germane to the application in person at the FAA Regional Airports Office located at: Fitzgerald Federal Building, #111, John F. Kennedy International Airport, Jamaica, New York, 11430.

In addition, any person may, upon request, inspect the application, notice and other documents germane to the

application in person at the Hagerstown Regional Airport—Richard A. Henson Field.

Issued in Washington, DC, 20041–6780, March 18, 1999.

Terry J. Page,

Manager, Washington Airports District Office.

[FR Doc. 99–8016 Filed 3–31–99; 8:45 am]

BILLING CODE 4910–13–M

DEPARTMENT OF TRANSPORTATION

Research and Special Programs Administration (RSPA)

[Docket No. RSPA–98–4470]

Pipeline Safety: Meetings of Pipeline Safety Advisory Committees

AGENCY: Office of Pipeline Safety, Research and Special Programs Administration, DOT.

ACTION: Notice of advisory committee meetings.

SUMMARY: Pursuant to section 10(a)(2) of the Federal Advisory Committee Act (Pub. L. 92–463, 5 U.S.C. App. 1) notice is hereby given of the following meetings of the Technical Pipeline Safety Standards Committee (TPSSC) and the Technical Hazardous Liquid Pipeline Safety Standards Committee (THLPSSC). Both the TPSSC and the THLPSSC are statutorily mandated advisory committees that assist RSPA's Office of Pipeline Safety in its consideration of proposed safety standards, risk assessments, and safety policies for hazardous liquid and natural gas pipelines. Each committee has an authorized membership of 15 persons, five each from government, industry, and the public. The committees meet in May and November of each year. Each Committee meeting, as well as a joint session of the two Committees, is held at the Department of Transportation, Nassif Building, 400 Seventh Street, SW, Washington, DC 20590. The May 4–5, 1999, meetings will be held in room 8236.

ADDRESSES: Comments on these meetings should be sent to the Dockets Facility, U.S. Department of Transportation, Plaza 401, 400 Seventh Street, SW, Washington, DC 20590–0001. Alternatively, comments may be e-mailed to ops.comments@rspa.dot.gov. All comments must reference Docket No. RSPA–98–4470. The Dockets Facility is located on the plaza level of the Nassif Building in Room 401, 400 Seventh Street, SW, Washington, DC. The Dockets Facility is open from 10:00 a.m. to 5:00 p.m., Monday through Friday, except on Federal holidays.

FOR FURTHER INFORMATION CONTACT: L.E. Herrick, OPS, (202) 366–5523 or Richard Huriaux, OPS, (202) 366–4565, regarding the subject matter of this notice.

SUPPLEMENTARY INFORMATION: On May 4, 1999, at 9:00 a.m., the Technical Hazardous Liquid Pipeline Safety Standards committee will meet in room 8236 of the Nassif Building. The preliminary agenda includes:

1. OPS Reorganization
2. Update on Usually Sensitive Areas (USA)
3. Pressure Testing of Older Hazardous Liquid Pipelines and Terminals
4. Overview of the OPA Program
5. Liquid Data Team Report

On May 4, 1999, at 11:30 a.m., the THLPSSC will be joined by members of the TPSSC for a joint session of the gas and hazardous liquid pipeline advisory committees. The preliminary agenda includes:

1. Qualification of Pipeline Personnel
2. Training Report: Pipeline Employee Performance Group (PEPG), Training of Minerals Management Service Personnel, and the Transportation Safety Institute (TSI) Curriculum
3. Compliance Program Directions: Inspection Procedures, Policy, and Federal/State Relationship
4. Gas and Hazardous Liquid Pipeline Repair
5. System Integrity Inspection Pilots
6. Marking of Water Crossings
7. National Pipeline Mapping System
8. Risk Management Demonstration
9. Corrosion Control on Gas and Hazardous Liquid Pipelines
10. Cost-Benefit Analysis Framework Working Group
11. Random Drug Testing Rates
12. Underground Damage Prevention Activities: Damage Quality Action Team (DAMQAT) and One Call Best Practices Study

On May 5, 1999, from 9:00 a.m. to 11:30 a.m., the Technical Pipeline Safety Standards Committee will meet. The preliminary agenda includes:

1. Gas Gathering Lines
2. Remotely Controlled Valves on Natural Gas Pipeline Facilities
3. Adoption of Industry Standards for Liquefied Natural Gas (LNG)
4. Plastic Pipeline Safety Standards and Research
5. Risk Management Local Distribution Company (LDC) Initiative

All three meetings will be open to the public. Members of the public will have an opportunity to make short statements on the topics under discussion. Anyone wishing to make an oral statement must notify Peggy Thompson, Room 7128, Department of Transportation, Nassif Building, 400 Seventh Street, SW, Washington, DC 20590, telephone (202) 366–1933, not later than April 15, 1999, on the topic of the statement and the time requested for presentation. The presiding officer at each meeting may deny any request to present an oral statement and may limit the time of any presentation.

Authority: 49 U.S.C. 60102, 60115.

Issued in Washington, DC on March 26, 1999.

Richard B. Felder,

Associate Administrator for Pipeline Safety.

[FR Doc. 99–7979 Filed 3–31–99; 8:45 am]

BILLING CODE 4910–60–P

DEPARTMENT OF TRANSPORTATION

Surface Transportation Board

[STB Finance Docket No. 33725]

CSX Transportation, Inc.—Trackage Rights Exemption—Consolidated Rail Corporation

Consolidated Rail Corporation (Conrail), has agreed to grant overhead trackage rights to CSX Transportation, Inc., (CSXT), to operate its trains, locomotives, cars and equipment with CSXT's own crews over Conrail's Olin Running Track between the Conrail/CSXT connection at milepost 0.5± and milepost 0.0±; and (2) Conrail's Pekin Running Track between milepost 0.0± and the limits of trackage being leased by CSXT at the connection to Conrail's Hillery Yard at milepost 1.85± in Danville, IL,[1] a distance of approximately 1.9 miles, including necessary head and tail room.

As noted in the agreement attached to CSXT's notice of exemption, this trackage rights arrangement is only temporary. The Conrail trackage that is the subject of the trackage rights is to be allocated to Conrail's subsidiary, New York Central Lines LLC, and operated by CSXT, after what is referred to as the ''Split Date,'' or the date of the division of Conrail's assets, as authorized by the Board in *CSX Corporation and CSX Transportation, Inc., Norfolk Southern Corporation and Norfolk Southern Railway Company—Control and Operating Leases/Agreements—Conrail Inc., and Consolidated Rail Corporation*, STB Finance Docket No. 33388 (STB served July 23, 1998). CSXT states that

[1] Under a separate agreement, CSXT is leasing approximately 18,850 feet of yard track in Conrail's Hillery Yard for storage of railroad cars.

it expects the Split Date to occur on June 1, 1999. The parties intend for the trackage rights to terminate on the Split Date, but if the Split Date does not occur before June 30, 1999, the parties' agreement provides for termination of the trackage rights on June 30, 1999. Accordingly, on March 25, 1999, CSXT filed a petition for exemption in STB Finance Docket No. 33725 (Sub/No. 1), *CSX Transportation, Inc.—Trackage Rights Exemption—Consolidated Rail Corporation,* requesting that the Board permit the proposed overhead trackage rights arrangement described in the present proceeding to expire on the Split Date or June 30, 1999, whichever occurs first. That petition will be addressed by the Board in a separate decision.

The transaction was scheduled to be consummated on March 19, 1999.

The purpose of the trackage rights is to allow CSXT to access the tracks it is leasing from Conrail in Hillery Yard.

As a condition to this exemption, any employees affected by the trackage rights will be protected by the conditions imposed in *Norfolk and Western Ry. Co.—Trackage Rights—BN,* 354 I.C.C. 605 (1978), as modified in *Mendocino Coast Ry., Inc.-Lease and Operate,* 350 I.C.C. 753 (1980).

This notice is filed under 49 CFR 1180.2(d)(7). It it contains false or misleading information, the exemption is void *ab initio.* Petitions to revoke the exemption under 49 U.S.C. 10502(d) may be filed at any time. The filing of a petition to revoke will not automatically stay the transaction.

An original and 10 copies of all pleadings, referring to STB Finance Docket No. 33725, must be filed with the Surface Transportation Board, Office of the Secretary, Case Control Unit, 1925 K Street, NW, Washington, DC 20423–0001. In addition, one copy of each pleading must be served on Charles M. Rosenberger, Senior Counsel, CSX Transportation, Inc., 500 Water Street, J–150, Jacksonville, FL 32202.

Board decisions and notices are available on our website at ''WWW.STB.DOT.GOV.''

Decided: March 26, 1999.

By the Board, David M. Konschnik, Director, Office of Proceedings.

Vernon A. Williams,

Secretary.

[FR Doc. 99–8128 Filed 3–31–99; 8:45 am]

BILLING CODE 4915–00–M

DEPARTMENT OF THE TREASURY

Domestic Finance; Notice of Open Meeting of the Advisory Committee U.S. Community Adjustment and Investment Program

The Department of the Treasury, pursuant to the North American Free Trade Agreement (''NAFTA'') Implementation Act (Pub. L. No. 103–182), established an advisory committee (the ''Advisory Committee'') for the community adjustment and investment program (the ''Program''). The Program provides financing in communities adversely impacted by NAFTA to create or preserve jobs. The charter of the Advisory Committee has been filed in accordance with the Federal Advisory Committee Act of October 6, 1972 (Pub. L. No. 92–463), with the approval of the Secretary of the Treasury.

The Advisory Committee consists of nine members of the public, appointed by the President, who collectively represent: (1) Community groups whose constituencies include low-income families; (2) scientific, professional, business, nonprofit, or public interest organizations or associations, which are neither affiliated with, nor under the direction of, a government; and (3) for-profit business interests. There are currently two vacancies in the Advisory Committee.

The objectives of the Advisory Committee are to: (1) provide informed advice to the President regarding the implementation of the Program; and (2) review on a regular basis, the operation of the Program, and provide the President with the conclusions of its review. Pursuant to Executive Order No. 12916, dated May 13, 1994, the President established an interagency committee to implement the Program and to receive, on behalf of the President, advice of the Advisory Committee. The committee is chaired by the Secretary of the Treasury.

A meeting of the Advisory Committee, which will be open to the public, will be held in Washington, DC at the Madison Hotel, Executive Chambers, 15th and M Streets, NW, Washington, DC 20005 (Tel. 202–862–1600) from 9 a.m. to 4 p.m. on Friday, April 16, 1999. The meeting room will accommodate approximately 75 persons and seating is available on a first-come, first-serve basis, unless space has been reserved in advance. Due to limited seating, prospective attendees are encouraged to contact the person listed below prior to April 9, 1999. If you would like to have the Advisory Committee consider a written statement, material must be submitted to the U.S. Community Adjustment and Investment Program, Advisory Committee, Department of the Treasury, 1500 Pennsylvania Avenue, NW, Room 3041, Washington, DC 20220 no later than April 2, 1999. If you have any questions, please call Dan Decena at (202) 622–0637 (Please note that this telephone number is not toll-free.)

Lee Sachs,

Deputy Assistant Secretary, Government Financial Policy.

[FR Doc. 99–7866 Filed 3–31–99; 8:45 am]

BILLING CODE 4810–70–P

DEPARTMENT OF THE TREASURY

Customs Service

[T.D. 99–31]

Tuna Fish—Tariff-Rate Quota

The tariff-rate quota for Calendar Year 1999, on tuna classifiable under subheading 1604.14.20, Harmonized Tariff Schedule of the United States (HTSUS).

AGENCY: Customs Service, Department of the Treasury.

ACTION: Announcement of the quota quantity for tuna for Calendar Year 1999.

SUMMARY: Each year the tariff-rate quota for tuna fish described in subheading 1604.14.20, HTSUS, is based on the United States canned tuna production for the preceding calendar year. This document sets forth the quota for calendar year 1999.

EFFECTIVE DATES: The 1999 tariff-rate quota is applicable to tuna fish entered, or withdrawn from warehouse, for consumption during the period January 1, through December 31, 1999.

FOR FURTHER INFORMATION CONTACT:

Cynthia Porter, Chief, Quota, Import Operations, Trade Compliance, Office of Field Operations, U.S. Customs Service, Washington, DC 20229, (202) 927–5399.

Background

It has now been determined that 32,697,510 kilograms of tuna may be entered for consumption or withdrawn from warehouse for consumption during the Calendar Year 1999, at the rate of 6 percent ad valorem under subheading 1604.14.20, HTSUS. Any such tuna which is entered, or withdrawn from warehouse, for consumption during the current calendar year in excess of this quota will be dutiable at the rate of 12.5 percent ad valorem under subheading 1604.14.30 HTSUS.

Dated: March 24, 1999.

Raymond W. Kelly,

Commissioner.

[FR Doc. 99–8033 Filed 3–31–99; 8:45 am]

BILLING CODE 4820–02–P

DEPARTMENT OF THE TREASURY

Fiscal Service

Financial Management Service; Proposed Collection of Information: Annual Letter—Certification of Authority

AGENCY: Financial Management Service, Fiscal Service, Treasury.

ACTION: Notice and request for comments.

SUMMARY: The Financial Management Service, as part of its continuing effort to reduce paperwork and respondent burden, invites the general public and other Federal agencies to take this opportunity to comment on a continuing information collection. By this notice, the Financial Management Service solicits comments concerning the form ''Annual Letter—Certification of Authority.''

DATES: Written comments should be received on or before June 1, 1999.

ADDRESSES: Direct all written comments to Financial Management Service, 3361–L 75th Avenue, Landover, Maryland 20785.

FOR FURTHER INFORMATION CONTACT: Requests for additional information or copies of the form(s) and instructions should be directed to the Surety Bond Branch, 3700 East-West Highway, Hyattsville, Maryland 20782, (202) 874–6850.

SUPPLEMENTARY INFORMATION: Pursuant to the Paperwork Reduction Act of 1995 (44 U.S.C. 3506(c)(2)(A)), the Financial Management Service solicits comments on the collection of information described below.

Title: Annual Letter—Certification of Authority.

OMB Number: 1510–0057.

Form Number: None.

Abstract: This letter is used to collect information from companies to determine their acceptability and solvency to write or reinsure federal surety bonds.

Current Actions: Extension of currently approved collection.

Type of Review: Regular.

Affected Public: Businesses or other for-profit.

Estimated Number of Respondents: 312.

Estimated Time Per Respondent: 62 hours 30 minutes.

Estimated Total Annual Burden Hours: 19,500.

Comments: Comments submitted in response to this notice will be summarized and/or included in the request for Office of Management and Budget approval. All comments will become a matter of public record. Comments are invited on: (a) Whether the collection of information is necessary for the proper performance of the functions of the agency, including whether the information shall have practical utility; (b) the accuracy of the agency's estimate of the burden of the collection of information; (c) ways to enhance the quality, utility, and clarity of the information to be collected; (d) ways to minimize the burden of the collection of information on respondents, including through the use of automated collection techniques or other forms of information technology; and (e) estimates of capital or start-up costs and costs of operation, maintenance and purchase of services to provide information.

Dated: March 25, 1999.

Judith R. Tillman,

Assistant Commissioner.

[FR Doc. 99–8038 Filed 3–31–99; 8:45 am]

BILLING CODE 4810–35–M

DEPARTMENT OF TREASURY

Internal Revenue Service

Information Reporting Program Advisory Committee; Notice of Meeting

AGENCY: Internal Revenue Service (IRS), Treasury.

ACTION: Notice of open meeting of the Information Reporting Program Advisory Committee.

SUMMARY: In 1991 the IRS established the Information Reporting Program Advisory Committee (IRPAC) in response to a recommendation made by the United States Congress. The primary purpose of IRPAC is to provide an organized public forum for discussion of relevant information reporting issues between the officials of the IRS and representatives of the payer/practitioner community. IRPAC offers constructive observations about current or proposed policies, programs, and procedures and, when necessary, suggests ways to improve the operation of the Information Reporting Program (IRP).

There will be a meeting of IRPAC on Wednesday, April 28, 1999. The meeting will be held in Room 126 of the Senate Dirksen Office Building, which is located at Constitution Avenue and 1st Street, NE., Washington, DC. It is suggested that meeting attendees enter the building through the Constitution Avenue entrance. A summarized version of the agenda along with a list of topics that are planned to be discussed are listed below.

Summarized Agenda for Meeting on April 28, 1999

Wednesday, April 28, 1999

9:00—Meeting Opens
11:30—Break for Lunch
1:00—Meeting Resumes
5:00—Meeting Adjourns

The topics that are planned to be covered are as follows:

(1) Counting the Number of B–12 Notices
(2) Schedule K–1 (Form 1065) Substitute Statements
(3) Distributions from Conduit IRAs of Former U.S. Residents and NRA Withholding Rules
(4) Revision of the Form 5472
(5) Changes to IRS Instructions to Clarify Education IRA Reporting Requirements
(6) Resolving Excess Contributions in a Roth IRA after the Tax Filing Deadline
(7) Qualified Settlement Fund Proposed Guidance
(8) Form 1441 Requirements and the Form W–9
(9) Follow-up on Combined Filing of Information Returns by Paying Agents
(10) Follow-up on Guidance on Claiming Exemptions on Form W–4—Frivolous Non-Filers
(11) IRS Update on Martinsburg Computing Center Initiatives
(12) IRS Update on Electronic Tax Administration IRP Initiatives
(13) IRS Update on HOPE Credit/Lifetime Learning Credit

Note: Last minute changes to these topics are possible and could prevent advance notice.

SUPPLEMENTARY INFORMATION: IRPAC reports to the National Director, Office of Specialty Taxes, who is the executive responsible for information reporting payer compliance.

IRPAC is instrumental in providing advice to enhance the IRP Program. Increasing participation by external stakeholders in the planning and improvement of the tax system will help achieve the goals of increasing voluntary compliance, reducing burden, and improving customer service. IRPAC is currently comprised of 20 representatives from various segments of the information reporting payer/practitioner community. IRPAC members are not paid for their time or services, but consistent with Federal regulations, they are reimbursed for

their travel and lodging expenses to attend two public meetings each year.

DATES: The meeting will be open to the public, and will be in a room that accommodates approximately 100 people, including members of IRPAC and IRS officials. Seats are available to members of the public on a first-come, first-served basis. In order to get your name on the list of public attendees, *please call Ms. Gloria Wilson at 202–622–4393, no later than Friday, April 23, 1999.* Notification of intent to attend should include your name, organization and phone number. If you leave this information for Ms. Wilson in a voice-mail message, please spell out all names. A draft of the agenda will be available via facsimile transmission the week prior to the meeting. Please call Ms. Gloria Wilson at 202–622–4393 on or after Monday, April 19, 1999, to have a copy of the agenda faxed to you. Please note that a draft agenda will not be available until that date.

ADDRESSES: If you would like to have IRPAC consider a written statement at a future IRPAC meeting (not this upcoming meeting), please write to Ms. Kate LaBuda at the IRS, Office of Payer Compliance, OP:EX:ST:PC, Room 2013, 1111 Constitution Avenue, NW., Washington, DC, 20224.

FOR FURTHER INFORMATION CONTACT: To get on the list of public attendees for this meeting, or to have a copy of the agenda faxed to you (on or after April 19, 1999), call Ms. Gloria Wilson at 202–622–4393. For general information about IRPAC call Ms. Kate LaBuda at 202–622–3404.

Dated: March 23, 1999.

Kate LaBuda,

(Acting) Director, Office of Payer Compliance, Office of Examination.

[FR Doc. 99–7902 Filed 3–31–99; 8:45 am]

BILLING CODE 4830–01–P

Corrections

Federal Register

Vol. 64, No. 62

Thursday, April 1, 1999

This section of the FEDERAL REGISTER contains editorial corrections of previously published Presidential, Rule, Proposed Rule, and Notice documents. These corrections are prepared by the Office of the Federal Register. Agency prepared corrections are issued as signed documents and appear in the appropriate document categories elsewhere in the issue.

DEPARTMENT OF THE INTERIOR

Bureau of Land Management

[WY–930–4210–06; WYW 147234, WYW 142433]

Notice of Proposed Withdrawal and Opportunity for Public Meeting; Cancellation of Proposed Withdrawal; Wyoming

Correction

In notice document 99–5085 beginning on page 10720 in the issue of Friday, March 5, 1999, make the following correction:

On page 10720, in the third column, under **Sixth Principal Meridian, Wyoming**, in the 11th line, ''M½'' should read ''N½''.

[FR Doc. C9–5085 Filed 3–31–99; 8:45 am]

BILLING CODE 1505–01–D

DEPARTMENT OF THE INTERIOR

National Park Service

Notice of Inventory Completion for Native American Human Remains and Associated Funerary Objects in the Possession of the National Park Service, Pecos National Historical Park, Pecos, NM

Correction

In notice document 99–6658, beginning on page 13444, in the issue of Thursday, March 18, 1999, make the following correction:

On page 13447, in the second column, the sixth line from the bottom, ''[thirty days after publication in the Federal Register]'' should read ''April 19, 1999''.

[FR Doc. C9–6658 Filed 3–31–99; 8:45 am]

BILLING CODE 1505–01–D

DEPARTMENT OF THE TREASURY

Customs Service

19 CFR Part 146

RIN 1515-AC05

Weekly Entry Procedure for Foreign Trade Zones

Correction

In proposed rule document 99–6467, beginning on page 13142, in the issue of Wednesday, March 17, 1999, make the following correction(s):

1. On page 13142, in the third column, in the fourth line ''fro'' should read ''for''.

2. On page 13143, in the first column, under the heading **Withdrawal of Proposal**, in the 11th line, ''or'' should read ''of''.

[FR Doc. C9–6467 Filed 3–31–99; 8:45 am]

BILLING CODE 1505–01–D

DEPARTMENT OF THE TREASURY

Internal Revenue Service

26 CFR Parts 54 and 602

[TD 8812]

RIN 1545-AI93

Continuation Coverage Requirements Applicable to Group Health Plans

Correction

In rule document 99–1520 beginning on page 5160, in the issue of Wednesday, February 3, 1999, make the following correction:

On page 5161, in the second column, in the footnote, the second line from the bottom, ''International'' should read ''Internal''.

[FR Doc. C9–1520 Filed 3–31–99; 8:45 am]

BILLING CODE 1505–01–D

federal register

Thursday
April 1, 1999

Part II

Nuclear Regulatory Commission

10 CFR Parts 170 and 171

Revision of Fee Schedules; 100% Fee Recovery, FY 1999; Proposed Rule

NUCLEAR REGULATORY COMMISSION

10 CFR Parts 170 and 171

RIN 3150–AG08

Revision of Fee Schedules; 100% Fee Recovery, FY 1999

AGENCY: Nuclear Regulatory Commission.

ACTION: Proposed rule.

SUMMARY: The Nuclear Regulatory Commission (NRC) is proposing to amend the licensing, inspection, and annual fees charged to its applicants and licensees. The proposed amendments are necessary to implement the Omnibus Budget Reconciliation Act of 1990 (OBRA–90), as amended, which mandates that the NRC recover approximately 100 percent of its budget authority in Fiscal Year (FY) 1999, less amounts appropriated from the Nuclear Waste Fund (NWF) and the General Fund. The amount to be recovered for FY 1999 is approximately $449.6 million.

DATES: The comment period expires May 3, 1999. Comments received after this date will be considered if it is practical to do so, but the NRC is able to ensure only that comments received on or before this date will be considered. Because OBRA–90 requires that NRC collect the FY 1999 fees by September 30, 1999, requests for extensions of the comment period will not be granted.

ADDRESSES: Mail written comments to: Secretary, U.S. Nuclear Regulatory Commission, Washington, DC 20555–0001, ATTN: Rulemakings and Adjudications Staff. Hand deliver comments to: 11555 Rockville Pike, Rockville, Maryland 20852, between 7:30 am and 4:15 pm Federal workdays. (Telephone 301–415–1678). Comments may also be submitted via the NRC's interactive rulemaking website through the NRC home page (http://www.nrc.gov). From the NRC homepage, select ''Rulemaking'' from the tool bar. The interactive rulemaking website can then be accessed by selecting ''Rulemaking Forum''. This site provides the ability to upload comments as files (any format), if your web browser supports that function. For information about the interactive rulemaking site, contact Ms. Carol Gallagher, 301–415–5905; e-mail CAG@nrc.gov.

Copies of comments received and the agency workpapers that support these proposed changes to 10 CFR parts 170 and 171 may be examined at the NRC Public Document Room, 2120 L Street NW (Lower Level), Washington, DC 20555–0001. Comments received may also be viewed and downloaded electronically via the interactive rulemaking website established by the NRC for this rulemaking.

FOR FURTHER INFORMATION CONTACT: Glenda Jackson, Office of the Chief Financial Officer, U.S. Nuclear Regulatory Commission, Washington, DC 20555–0001, Telephone 301–415–6057.

SUPPLEMENTARY INFORMATION:

I. Background.
II. Proposed Action.
III. Plain Language.
IV. Environmental Impact: Categorical Exclusion.
V. Paperwork Reduction Act Statement.
VI. Regulatory Analysis.
VII. Regulatory Flexibility Analysis.
VIII. Backfit Analysis.

I. Background

Public Law 101–508, the Omnibus Budget Reconciliation Act of 1990 (OBRA–90), enacted November 5, 1990, requires that the NRC recover approximately 100 percent of its budget authority, less the amount appropriated from the Department of Energy (DOE) administered Nuclear Waste Fund (NWF), for FYs 1991 through 1995 by assessing fees. OBRA–90 was amended in 1993 to extend the NRC's 100 percent fee recovery requirement through 1998. In 1998 OBRA–90 was amended to extend the NRC's 100 percent fee recovery requirement through FY 1999.

The NRC assesses two types of fees to recover its budget authority. First, license and inspection fees, established at 10 CFR part 170 under the authority of the Independent Offices Appropriation Act of 1952 (IOAA), 31 U.S.C. 9701, recover the NRC's costs of providing individually identifiable services to specific applicants and licensees. Examples of the services provided by the NRC for which these fees are assessed are the review of applications for the issuance of new licenses, approvals or renewals, and amendments to licenses or approvals. Second, annual fees, established in 10 CFR part 171 under the authority of OBRA–90, recover generic and other regulatory costs not recovered through 10 CFR part 170 fees.

II. Proposed Action

The NRC is proposing to amend its licensing, inspection, and annual fees to recover approximately 100 percent of its FY 1999 budget authority, including the budget authority for its Office of the Inspector General, less the appropriations received from the NWF and the General Fund. For FY 1999, the NRC's budget authority is $469.8 million, of which $17.0 million has been appropriated from the NWF. In addition, $3.2 million has been appropriated from the General Fund for activities related to regulatory reviews and other assistance provided to the DOE and other Federal agencies. The NRC's FY 1999 Appropriations Act states that this $3.2 appropriation shall be excluded from license fee revenues. Therefore, the NRC is required to collect approximately $449.6 million in FY 1999 through 10 CFR part 170 licensing and inspection fees and 10 CFR part 171 annual fees. The total amount to be recovered in fees for FY 1999 is $5.2 million less than the amount estimated for recovery in the NRC's FY 1998 fee rule.

The reduced budgeted costs to be recovered through fees for FY 1999 reflect several actions taken by the NRC. These actions include strategic planning, downsizing, and a more aggressive policy on seeking reimbursement for performing services that are not a required part of the agency's statutory mission. For example, for FY 1999, the NRC entered into an agreement with the U. S. Agency for International Development to fund NRC's staff costs associated with providing nuclear safety assistance to the countries of the former Soviet Union. As a result, NRC licensees are not required to pay for the costs of this activity in FY 1999. These costs were previously included in NRC's budget authority and the costs were recovered through annual fees assessed to NRC licensees.

The NRC estimates that approximately $107.7 million will be recovered in FY 1999 from fees assessed under Part 170 and other receipts, compared to $94.6 million in FY 1998. The increase from FY 1998 is primarily due to increased Part 170 collections largely attributable to changes in Commission policy included in the FY 1998 final fee rule, such as billing full cost under Part 170 for resident inspectors, and a $4.1 million carryover from additional collections in FY 1998 that were unanticipated at the time the final FY 1998 fee rule was published. In addition to the estimated Part 170 collections and other receipts, the NRC estimates a net adjustment of approximately $2.1 million for payments received in FY 1999 for FY 1998 invoices. The remaining $339.8 million would be recovered in FY 1999 through the 10 CFR part 171 annual fees, which is approximately $20.4 million less than in FY 1998.

Table I summarizes the budget and fee recovery amounts for FY 1999:

TABLE 1.—BUDGET AND FEE RECOVERY AMOUNTS FOR FY 1999

[Dollars in Millions]

Total Budget	$469.8
Less NWF	−17.0
Less General Fund (Reviews for DOE and other Federal agencies)	−3.2
Total Fee Base	449.6
Less Part 170 Fees	−103.5
Less other receipts	−4.2
Part 171 Fee Collections Required	341.9
Part 171 Billing Adjustment [1]	
Unpaid FY 1999 invoices	3.4
Less Payments received in FY 1999 for prior year invoices	−5.5
Subtotal	−2.1
Adjusted Part 171 Collections Required	339.8

[1] These adjustments are necessary to ensure that the ''billed'' amount results in the required collections. Positive amounts indicate amounts billed that will not be collected in FY 1999.

Because the final FY 1999 fee rule will be a ''major'' final action as defined by the Small Business Regulatory Enforcement Fairness Act of 1996, the NRC's fees for FY 1999 would become effective 60 days after publication of the final rule in the **Federal Register**.

The NRC announced in the FY 1998 proposed rule that the final rule would no longer be mailed to all licensees. However, because the NRC is soliciting public comments on two potential annual fee schedules for FY 1999, the FY 1999 final rule will be mailed to all licensees. As a cost-saving measure, the NRC does not plan to routinely mail future final fee rules to all licensees, but will send the final rules to any licensee or other person upon request. As a matter of courtesy, the NRC will continue to send the proposed fee rules to all licensees.

In addition to publication in the **Federal Register**, the final rule will be available on the internet at http://ruleforum.llnl.gov/. Copies of the final rule will also be mailed upon request. To request a copy, contact the License Fee and Accounts Receivable Branch, Division of Accounting and Finance, Office of the Chief Financial Officer, at 301–415–7554, or e-mail us at fees@nrc.gov. It is our intent to publish the final rule in June of 1999.

The NRC is proposing to make changes to 10 CFR parts 170 and 171 as discussed in Sections A. and B. below:

A. Amendments to 10 CFR Part 170: Fees for Facilities, Materials, Import and Export Licenses, and Other Regulatory Services Under the Atomic Energy Act of 1954, as Amended

The NRC is proposing four major amendments to 10 CFR part 170, and several administrative amendments to update information in certain sections and to accommodate the major proposed changes. These amendments further the underlying basis for the regulation—that fees be assessed to applicants, persons, and licensees for specific identifiable services rendered. The amendments also comply with the guidance in the Conference Committee Report on OBRA–90 that fees assessed under the IOAA recover the full cost to the NRC of identifiable regulatory services that each applicant or licensee receives.

The major changes to 10 CFR part 170 proposed by the NRC are:

1. Expanded Part 170 Cost Recovery

The NRC is proposing to expand the scope of part 170 to include incident investigations, performance assessments and evaluations (except those for which the licensee volunteers at NRC's request and which NRC accepts), reviews of reports and other submittals such as responses to Confirmatory Action Letters, and full cost recovery for time expended by Project Managers.

Part 170 fees are based on Title V of the IOAA, interpretations of that legislation by the Federal courts, and Commission guidance. These guidelines provide that part 170 fees may be assessed to persons who are identifiable recipients of ''special benefits'' conferred by specifically identified activities of the NRC. The term ''special benefits'' includes services rendered at the request of a recipient and all services necessary to the issuance of a required permit, license, certificate, approval, or amendment, or other services necessary to assist a recipient in complying with statutory obligations under the Commission's regulations.

Part 170 fees are currently assessed for:

(a) The review of applications for and the issuance of licensing actions or other approvals;

(b) The review and approval of topical reports;

(c) Preapplication consultations and reviews;

(d) Inspections; and

(e) The costs of maintaining resident inspectors.

The remainder of NRC's budget authority is recovered through annual fees assessed under part 171.

In the NRC's FY 1998 fee rulemaking, steps were taken to more appropriately recover costs for certain activities through part 170 fees rather than through part 171 fees. The NRC's proposals to further expand the scope of part 170 for FY 1999 would result in cost recovery for additional activities through part 170 fees rather than through part 171 fees.

a. Inspections

Under this proposed change, part 170 fees would be assessed for all inspections, including licensee-specific performance reviews, assessments, evaluations and incident investigations. Examples of activities that would be billable under part 170 are performance assessments of fuel facilities, Diagnostic

Evaluation Team assessments, and Incident Investigation Team investigations. Licensees who volunteer to participate in a performance review or assessment at NRC's request and which the NRC accepts would be exempted from these part 170 fees. The inspections that are proposed to be included in part 170 are ''special benefits'' provided to identifiable recipients, whether or not an inspection report is issued. For example, incident investigations are investigations of significant operational events involving power reactors and other facilities. Causes of the events are determined and corrective actions taken. Incident Investigation Teams investigate events of potentially major significance. Although the investigations may result in some generic lessons, the investigations are primarily a direct service provided to the specific licensee and assist the licensee in complying with NRC regulations. The costs of any generic efforts that may result from the investigations, such as the development of new regulatory requirements and guidance, would continue to be recovered through part 171 annual fees, not through part 170 fees assessed to the licensee. In addition, any time expended by our Office of Investigations on these activities will be recovered through part 171 fees. These proposed part 170 fees would not apply to materials licenses for which no inspection fee is specified in part 170 because the inspection costs are included in the part 171 annual fee for those fee categories.

b. Additional Document Reviews

The NRC is also proposing to expand the scope of part 170 to include reviews of documents submitted to the NRC that do not require formal or legal approvals or amendments to the technical specifications or license. Examples are certain financial assurance reviews, reviews of responses to Confirmatory Action Letters, reviews of uranium recovery licensees' land-use survey reports, and reviews of 10 CFR 50.71(e) final safety analysis reports (FSARs). part 170 fees are currently not assessed for these reviews because they do not result in an approval or amendment, and the costs are recovered through part 171 annual fees. Although no specific approval is issued, reviews of these submittals are services provided by the NRC to identifiable recipients that assist them in complying with NRC regulations.

c. Project Manager Time

Additionally, the NRC is proposing that all project managers time, excluding leave and time spent on generic activities such as rulemaking, be recovered through Part 170 fees assessed to the specific applicant or licensee to which the project manager is assigned. This change would be applicable to all licensees subject to full cost fees under Part 170 and to which project managers are assigned. Currently, only project manager time spent on a specific licensing action or inspection is billed under Part 170 and costs for the remaining project manager activities are recovered in the Part 171 annual fees. However, there are other project manager activities that also support and provide a direct benefit to the assigned licensee or site.

Examples of project manager activities which would be included in the Part 170 fee assessment are those associated with oversight of the assigned license or plant (e.g., setting work priorities, planning and scheduling review efforts, preparation and presentations of briefings for visits to NRC by utility officials, interfacing with other NRC offices, the public, and other Federal and state and local government agencies, and visits to the assigned site for purposes other than a specific inspection), and training. Examples of project manager generic activities that would not be subject to fee recovery under Part 170 are rulemaking and the development of regulatory guides, generic licensing guides, standard review plans, and generic letters and bulletins. If a project manager is assigned to more than one license or site, costs for activities other than licensee-specific licensing or inspection activities would be prorated to each of the licenses or sites to which the project manager is assigned. The concept of full cost recovery for project managers is similar to the concept of full cost recovery for resident inspectors, which was added to Part 170 in the FY 1998 final fee rule (June 10, 1998; 63 FR 31840).

d. Other

The NRC is also soliciting public comment in this proposed rule on whether to include the development of orders, evaluation of responses to orders, development of Notices of Violation (NOVs) accompanying escalated enforcement actions, and evaluation of responses to NOVs in next year's proposed fee rule. The costs of these activities are currently recovered through Part 171 annual fees.

Orders and Related Activities

Currently, Part 170 fees are not assessed for the development of orders issued under 10 CFR 2.202, or for the issuance of amendments specifically resulting from these orders. The primary basis for the current policy is that fees could be perceived as additional fines to the licensee, or in some cases, such as when a licensee requests a hearing on an enforcement order, fees could be viewed as a penalty for the licensee exercising its rights to challenge the NRC action. In addition, depending on the licensees' responses, orders may also be withdrawn or modified. Moreover, in cases of misconduct, an order may be issued to the individual rather than the licensee. On the other hand, the development of orders and the review of responses to orders are activities performed for specifically identifiable recipients.

Escalated Enforcement Actions

Although costs of inspections forming the basis for enforcement actions, except those arising from an allegation, are currently recovered through Part 170 fees assessed to the affected licensee, the costs for escalated enforcement actions (i.e., the development and issuance of Notices of Violations and orders imposing civil penalties) are not. Part 170 fees are not currently assessed for the escalated enforcement actions because they serve the generic purpose of industry-wide deterrence. In addition, some escalated enforcement actions are withdrawn. There also is concern that in some cases the fee could be much greater than the civil penalty, which is intended to encourage a licensee to comply with the NRC requirements. As with orders issued under 10 CFR 2.202, fees could be viewed as a penalty for the licensee exercising its rights to challenge the NRC action. However, escalated enforcement actions are activities performed by the NRC which pertain to identifiable licensees.

2. Amendment Fees Based on Average Costs

The NRC is proposing to revise 10 CFR 170.31 to eliminate the amendment fees for small materials licensees that are based on the average time to complete the reviews (''flat'' fees) and include the amendment processing costs in the Part 171 annual fees assessed to the small materials licensees. This proposal would continue the NRC's initiatives to streamline its fee program. In a similar action, the inspection and renewal fees for these licensees were eliminated in the FY 1995 and FY 1996 fee rulemakings, respectively, and the costs included in the annual fees for these categories of licensees.

Although approximately 2500 requests for amendments to small

materials licenses are received and processed each year for fee recovery purposes, less than $900,000 in Part 170 fees is collected annually for these amendments. The number of amendments, as well as the Part 170 fee collections, will decrease as more states become Agreement States.

The current approach for assessing materials license amendment fees is complex and labor intensive. Approximately 25 percent of the amendment requests are submitted with incorrect fee payments. In the case of underpayment, the licensee must be notified and the license amendment held in abeyance until the correct fee is received. In the case of overpayments, refunds must be authorized and processed through the Department of the Treasury (Treasury). Because of Treasury requirements that all Federal payments (other than payments made under the Internal Revenue Code of 1986) made after January 1, 1999, must be made by electronic funds transfer, information on the payee's financial institution and bank accounts must be collected.

These administrative burdens for flat amendment fees would be eliminated by including the amendment costs in the Part 171 annual fee assessed to these licensees. This would result in an estimated $900,000 being added to the annual fees assessed to approximately 5700 materials licensees.

Amendment fees for these licensees currently range from $160 for an amendment to a custom sealed source evaluation (fee category 9D) to $1,100 for an amendment to a custom device evaluation (fee category 9B). The majority of the amendments are filed by licensees in fee category 3P, which includes licenses for possession and use of byproduct material in industrial measuring systems and gas chromatographs, and licenses for in-vitro studies, and by licensees in fee category 7C, which covers most licenses for human use of byproduct, source, and special nuclear material. The current amendment fee for fee category 3P is $340; the current amendment fee for fee category 7C is $450. Although not all materials licensees request amendments during a given fiscal year, approximately 80 percent request at least one amendment over a five-year period, and approximately 40 percent of these licensees request multiple amendments during a five-year period.

In addition to streamlining the NRC process, this proposed change would eliminate the steps licensees currently take to submit the payments for their amendment requests. It would also eliminate any delays in approving proposed amendments due to incorrect payments and would provide an efficient means of recovering these costs. The NRC believes that the efficiencies to be gained outweigh any inequities that may result because not all materials licenses are amended each fiscal year.

If we do not adopt this approach, amendment fees set forth in the final fee rule would likely approximate those set forth in the FY 1998 fee schedule, although there may be some variance as a result of the biennial fee review required by the Chief Financial Officers Act and the increase in the hourly rate for the materials program described below.

3. Hourly Rates

The NRC is proposing to revise the two professional hourly rates for NRC staff time established in § 170.20. These proposed rates would be based on the number of FY 1999 direct FTEs and the FY 1999 NRC budget, excluding direct program support costs and NRC's appropriations from the NWF and the General Fund. These rates are used to determine the Part 170 fees. The proposed hourly rate for the reactor program is $141 per hour ($250,403 per direct FTE). This rate would be applicable to all activities for which fees are based on full cost under § 170.21 of the fee regulations. The proposed hourly rate for the nuclear materials and nuclear waste program is $140 per hour ($248,728 per direct FTE). This rate would be applicable to all activities for which fees are based on full cost under § 170.31 of the fee regulations. In the FY 1998 final fee rule, these rates were $124 and $121, respectively. The FY 1998 rates represented a decrease from FY 1997 of $7 per hour for the reactor program from FY 1997, and $4 per hour for the materials program.

This proposed increase can be readily explained. In calculating the proposed FY 1999 hourly rates, the NRC staff discovered that a coding error in NRC's budget, which is used in the development of fees, occurred for FY 1998. This coding error contributed to the hourly rate decreases for that year. In addition, costs for direct FTEs and overhead are calculated for the reactor and materials programs and for the surcharge. Although the proposed FY 1999 hourly rates reflect an increase of $17—$19 per hour compared to FY 1998, the error was in the reduced FY 1998 hourly rate, not in the increased FY 1999 hourly rate. Specifically, 134 FTE and approximately $10 million in contract support for regional management and support were erroneously coded as direct resources for FY 1998 rather than as overhead. The correction of that error in FY 1999 results in substantial increases in the hourly rates compared to FY 1998, from $124 to $141 for the reactor program, and from $121 to $140 for the materials program. This is the result of the increased overhead costs to be allocated to the two programs, with fewer direct FTE to divide the costs among. In addition, the proportion of direct resources has shifted. The materials program now has a larger share. Therefore, the materials program must absorb more of the overhead and management and support costs.

Because of the error in FY 1998, the FY 1999 hourly rates are more appropriately compared to the FY 1997 hourly rates of $131 and $125 for the reactors and materials programs, respectively. Applying only the salary and benefit increases of 4.4 percent from FY 1997 to FY 1998, and 3.68 percent from FY 1998 to FY 1999, would result in FY 1998 hourly rates of $137 for the reactor program and $131 for the materials program, and 1999 hourly rates of $142 for the reactor program and $136 for the materials program. This does not consider the shift that has occurred in the proportion of direct resources from the reactor program to the materials program that results in the materials program having a larger share and therefore absorbing more of the overhead and management and support costs.

The method used to determine the two professional hourly rates is as follows:

a. Direct program FTE levels are identified for both the reactor program and the nuclear material and waste program.

b. Direct contract support, which is the use of contract or other services in support of the line organization's direct program, is excluded from the calculation of the hourly rate because the costs for direct contract support are charged directly through the various categories of fees.

c. All other direct program costs (i.e., Salaries and Benefits, Travel) represent ''in-house'' costs and are to be allocated by dividing them uniformly by the total number of direct FTEs for the program. In addition, salaries and benefits plus contracts for non-program direct management and support, and the Office of the Inspector General are allocated to each program based on that program's direct costs. This method results in the following costs which are included in the hourly rates.

TABLE II.—FY 1999 BUDGET AUTHORITY TO BE INCLUDED IN HOURLY RATES

	Reactor program	Materials program
Direct Program Salaries and Benefits	$99.2m	$26.4m
Overhead Salaries and Benefits, Program Travel and Other Support	$54.1m	$15.0m
Allocated Agency Management and Support	$104.2m	$28.1m
Subtotal	$257.5m	$69.5m
Less offsetting receipts	−.1m.	
Total Budget Included in Hourly Rate	$257.4m	$69.5m
Program Direct FTEs	1,028.0	279.7
Rate per Direct FTE	$250,403	$248,728
Professional Hourly Rate (Rate per direct FTE divided by 1,776 hours)	$141	$140

As shown in Table II above, dividing the $257.4 million (rounded) budget for the reactor program by the reactor program direct FTEs (1,028) results in a rate for the reactor program of $250,403 per FTE for FY 1999. The Direct FTE Hourly Rate for the reactor program would be $141 per hour (rounded to the nearest whole dollar). This rate is calculated by dividing the cost per direct FTE ($250,403) by the number of productive hours in one year (1,776 hours) as set forth in the revised OMB Circular A–76, ''Performance of Commercial Activities.'' Dividing the $69.5 million (rounded) budget for the nuclear materials and nuclear waste program by the program direct FTEs (279.7) results in a rate of $248,728 per FTE for FY 1999. The Direct FTE Hourly Rate for the materials program would be $140 per hour (rounded to the nearest whole dollar). This rate is calculated by dividing the cost per direct FTE ($248,728) by the number of productive hours in one year (1,776 hours).

Any professional hours expended on or after the effective date of the final rule would be assessed at the FY 1999 hourly rates.

4. Fee Adjustments

The NRC is proposing to adjust the current Part 170 fees in §§ 170.21 and 170.31 to reflect both the changes in the revised hourly rates and the results of the biennial review of Part 170 fees required by the Chief Financial Officers (CFO) Act. To comply with the requirements of the CFO Act, the NRC has evaluated historical professional staff hours used to process a new license application for those materials licensees whose fees are based on the average cost method (flat fees). This review also included new license and amendment applications for import and export licenses.

Evaluation of the historical data shows that the fees based on the average number of professional staff hours needed to complete materials licensing actions should be increased in some categories and decreased in others to reflect the costs incurred in completing the licensing actions. The data for the average number of professional staff hours needed to complete licensing action were last updated in FY 1997 (62 FR 29194; May 29, 1997). Thus, the revised average professional staff hours reflect the changes in the NRC licensing review program that have occurred since FY 1997. The proposed licensing fees are based on the revised average professional staff hours needed to process the licensing actions multiplied by the proposed professional hourly rate for FY 1999.

The proposed licensing fees reflect an increase in average time for new license applications for 20 of the 33 materials fee categories included in the biennial review, a decrease in average time for 8 fee categories, and the same average time for the remaining 5 fee categories. The average time for export and import new license applications and amendments remained the same for 6 fee categories in §§ 170.21 and 170.31, and decreased for 4 fee categories.

The amounts of the materials licensing ''flat'' fees were rounded so that the amounts would be de minimis and the resulting flat fee would be convenient to the user. Fees under $1,000 are rounded to the nearest $10. Fees that are greater than $1,000 but less than $100,000 are rounded to the nearest $100. Fees that are greater than $100,000 are rounded to the nearest $1,000.

The proposed licensing ''flat'' fees are applicable to fee categories K.1 through K.5 of § 171.21, and fee categories 1.C, 1.D, 2.B, 2.C, 3.A through 3.P, 4.B through 9.D, 10.B, 15.A through 15.E, and 16 of § 171.16. Applications filed on or after the effective date of the final rule would be subject to the revised fees in this proposed rule.

5. Administrative Amendments

a. The NRC is proposing to amend § 170.2, Scope, and § 170.3, Definitions, to specifically include Certificates of Compliance (Certificates) issued pursuant to Part 76. The NRC issued two Certificates pursuant to Part 76 to the United States Enrichment Corporation for operation of the two gaseous diffusion uranium enrichment plants located at Paducah, Kentucky, and Piketon, Ohio. This proposal would add Part 76 certificates to the definition of Materials License in § 170.3 (Uranium enrichment facilities are already defined in § 170.3). These proposed changes are administrative changes to clarify the applicability of Part 170 fees to these Certificates.

b. The NRC is proposing to revise the definition of *Inspection*, to specifically include performance assessments, evaluations, and incident investigations. This change is needed to incorporate NRC's proposal to include these activities in Part 170.

c. The NRC is proposing to revise the definition of *Special projects* to include financial assurance submittals, responses to Confirmatory Action Letters, uranium recovery licensees' land-use survey reports, and 10 CFR 50.71 final safety analysis reports in the list of examples of documents submitted for review that would be subject to special project fees. This change is needed to incorporate NRC's proposal to include the review of these documents in Part 170.

d. The NRC is proposing to revise § 170.5, Communications, to indicate that all communications concerning Part 170 should be addressed to the Office of the Chief Financial Officer rather than the Executive Director for Operations. Effective with the January 5, 1997, NRC reorganization, the Executive Director for Operations no longer serves as the Chief Financial Officer. The Chief Financial Officer has been delegated authority to exercise all authority vested

in the Commission under 10 CFR parts 170 and 171.

e. The NRC is proposing to delete the current exemption in § 170.11(a)(11) which eliminates amendment fees for amendments to change the name of the Radiation Safety Officer for portable gauge licenses issued in accordance with NUREG–1556,[1] Volume 1. This proposed rule would eliminate the requirement for amendment fees for these licenses and thus the exemption would no longer be needed.

f. The NRC is proposing to add 170.11(a)(12) to provide an exemption from Part 170 fees for those licensee-specific performance assessments or evaluations for which the licensee volunteers at NRC's request. This change would accommodate NRC's proposal to include performance assessments and evaluations in Part 170, except those for which the licensee volunteers at NRC's request and which are accepted by the NRC.

g. The NRC is proposing to revise § 170.12, Payment of Fees, to reflect the NRC's proposals to expand Part 170 to include performance assessments, evaluations, and incident investigations, reviews of reports and other documents, and full cost recovery for project managers. This section would also be revised to delete references to amendment fees that are not based on full cost to reflect the NRC's proposal to eliminate these fees from Part 170 and include the costs in the Part 171 annual fee for these materials licensees.

Section 170.12(h), Method of Payment, would be redesignated as 170.12(f) and revised to specify the information the NRC needs to issue refunds. This change is necessitated by new Treasury requirements that were effective January 1, 1999.

In summary, the NRC is proposing to:

1. Assess Part 170 fees, for licenses subject to Part 170 full cost fees, to recover costs for all plant or licensee-specific inspections, including performance reviews, assessments, evaluations, and incident investigations, reviews of reports and other documents, and all of the project managers' time excluding time spent on generic activities and leave time;

2. Eliminate ''flat'' amendment fees for materials licenses and recover the amendment costs through Part 171 annual fees assessed to materials licensees;

3. Revise the two 10 CFR part 170 hourly rates; and

4. Revise the licensing fees assessed under 10 CFR part 170 to comply with the CFO Act's requirement that fees be revised to reflect the cost to the agency, and to reflect the revised hourly rates.

B. Amendments to 10 CFR Part 171: Annual Fees for Reactor Licenses, Fuel Cycle Licenses and Materials Licenses, Including Holders of Certificates of Compliance, Registrations, and Quality Assurance Program Approvals, and Government Agencies Licensed by the NRC

The NRC proposes three major amendments to 10 CFR part 171 and several administrative amendments to update information in certain sections and to incorporate the major proposed changes. These major changes would result in annual fees being assessed to licensees previously exempted from annual fees, increased annual fees for some licensees, and decreased annual fees for other licensees. To address concerns about potential significant fee increases for certain categories of licensees, the NRC is presenting two annual fee options for public comment, as described in 2. below. The Commission will determine which option to incorporate in its final rule after evaluating public comments.

The proposed changes are consistent with our statutory mandate; that is, charging a class of licensees for NRC costs attributable to that class of licensees. The changes are consistent with the Congressional guidance in the Conference Committee Report on OBRA–90, which states that the ''conferees contemplate that the NRC will continue to allocate generic costs that are attributable to a given class of licensees to such class'' and the ''conferees intend that the NRC assess the annual charge under the principle that licensees who require the greatest expenditures of the agency's resources should pay the greatest annual fee'' (136 Cong. Rec. at H12692–93). Costs not attributable to a class of licensees would be allocated following the conferees' guidance that ''the Commission should assess the charges for these costs as broadly as practicable in order to minimize the burden for these costs on any licensee or class of licensees so as to establish as fair and equitable a system as is feasible.'' (136 Cong. Rec. at H12692–3). The Conference Report guidance also provides that: ''These expenses may be recovered from such licensees as the Commission, in its discretion, determines can fairly, equitably and practicably contribute to their payment.'' As in the past, these costs would be allocated to the entire population of NRC licensees that pay annual fees, based on the amount of the budget directly attributable to a class of licensees. This results in a higher percentage of these costs being allocated to operating power reactor licensees as opposed to other classes of licensees.

The major proposed changes to Part 171 are in the following areas.

1. Reactor Decommissioning/spent Fuel Storage

The NRC is proposing to revise 10 CFR 171.15 to establish a spent fuel storage/reactor decommissioning annual fee to be assessed to all Part 50 power reactor licensees, regardless of their operating status, and to those Part 72 licensees who do not hold a Part 50 license. The full amount of the FY 1999 annual fee would be billed to those Part 50 licensees who are in a decommissioning or possession only status upon publication of the FY 1999 final rule. Payment would be due on the effective date of the FY 1999 rule. For operating power reactors and those Part 72 licensees who do not hold a Part 50 license, the new fee would be added to the fourth quarter FY 1999 annual fee bill. Any adjustments for prior payments during FY 1999 would be made in accordance with § 171.19(b). The current annual fees in 10 CFR 171.16 for Part 72 licenses for independent spent fuel storage would be eliminated.

This proposed change would affect two existing NRC annual fee policies:

(a) Costs for generic and other activities related to dry storage of spent fuel that are not recovered through Part 170 licensing and inspection fees are recovered through Part 171 annual fees assessed to all Part 72 licensees; and

(b) Part 171 annual fees are not assessed to reactor licensees in decommissioning or possession only status. Power reactor licensees who are in a decommissioning or possession only status would, for the first time, be subject to Part 171 annual fees for their Part 50 license. However, these licensees currently pay an annual fee for any Part 72 license they hold.

The current policy has raised three concerns:

(a) The fee structure could create a disincentive for licensees to pursue dry storage;

(b) The fairness of assessing multiple annual fees if a licensee holds multiple ISFSI licenses for different designs; and

(c) Not all affected licensees are being assessed the costs of NRC's generic decommissioning activities.

[1] Copies of NUREGS may be purchased from the Reproduction and Distribution Section, Office of the Chief Information Officer, U.S. Nuclear Regulatory Commission, Washington, DC 20555–0001. Copies are also available from the National Technical Information Service, 5285 Port Royal Road, Springfield, VA 22161. A copy is also available for inspection and/or coping at the NRC Public Document Room, 2120 L Street, NW. (Lower Level), Washington, DC.

The NRC announced in the FY 1998 proposed fee rulemaking (April 1, 1998, 63 FR 16046) and final fee rulemaking (June 10, 1998, 63 FR 31840), that it planned to reexamine the current annual fee exemption policy for licensees in decommissioning or holding possession only licenses and the annual fee policy for reactors' storage of spent fuel and include any changes to the current fee policies in the FY 1999 fee rulemaking. One purpose of the review was to assure consistent fee treatment for both wet storage (i.e., spent fuel pool) and dry storage (i.e., independent spent fuel storage installations (ISFSIs)) of spent fuel. The Commission previously determined that both storage options are considered safe and acceptable forms of storage for spent fuel. Under current fee regulations, Part 50 licensees in decommissioning who store spent fuel in the spent fuel pool are not assessed an annual fee, but licensees who store spent fuel in an ISFSI under Part 72 are assessed an annual fee. The proposed change would give equivalent fee treatment to both storage options.

As indicated previously, Part 171 annual fees are not currently assessed to reactor licensees who have notified the NRC that they no longer want an NRC license and have permanently ceased operations. This policy is based on the premise that the primary benefit the NRC provides a licensee is the authority to use licensed facilities or material. Although NRC's generic decommissioning activities support both licenses authorizing operations and those limited to decommissioning or possession only, today only licensees with an operating license bear these costs. This becomes a larger problem for operating licensees because, as the number of operating licensees declines, the financial burden on the remaining active licensees increases. Thus, the proposed rule is intended to ensure that all power reactor licensees who benefit from NRC's generic activities bear a fair portion of these costs relating to decommissioning of reactors.

With regard to spent fuel storage, holders of licenses issued under Part 72 for ISFSIs are currently assessed annual fees for each Part 72 license they hold. Part 72 covers both general and specific licenses. Part 72 general licenses are granted to licensees who hold a Part 50 license. Part 72 specific licenses must be applied for and their issuance is not contingent upon the licensee holding a Part 50 license. Because the Part 72 general licenses are issued by regulation to all Part 50 licensees, these licenses are subject to annual fees only when they have been used (i.e, once spent fuel has been loaded into the generally-licensed ISFSI). If a licensee holds more than one Part 72 license, for example, a Part 72 general license and a Part 72 specific license for two different designs, they are assessed an annual fee for each license. Under the proposed change, only one annual fee would be charged.

Costs for generic activities associated with storage of spent fuel in the spent fuel pool (wet storage) are currently included in the annual fee assessed to operating power reactors because the Part 50 licenses cover this storage. Thus, if a Part 50 licensee is in decommissioning and stores spent fuel in the spent fuel pool, it is not assessed an annual fee. On the other hand, if a Part 50 licensee is in decommissioning and stores spent fuel in an ISFSI, it is assessed an annual fee for each Part 72 ISFSI license used.

Section 171.15 would be revised to include the spent fuel storage/reactor decommissioning annual fee to be assessed to Part 50 power reactor licensees and those Part 72 specific licensees who do not hold a Part 50 license. The annual fees in § 171.16 for fee categories 1B and 13B would be eliminated. This change would not affect the manner in which licensing and inspection costs are recovered (i.e., Part 170 fees would still be assessed to Part 72 licensees and to Part 50 licensees in decommissioning or possession only status for licensing and inspection services). The NRC would continue to include the costs for generic decommissioning/reclamation costs for nonpower reactors, fuel facilities, materials, and uranium recovery licensees in the surcharge assessed to operating licensees, including operating power reactors.

2. Annual Fees

The NRC is proposing to establish new baseline annual fees for FY 1999. The annual fees in §§ 171.15 and 171.16 would be revised for FY 1999 to recover approximately 100 percent of the FY 1999 budget authority, less fees collected under 10 CFR part 170 and funds appropriated from the NWF and the General Fund. The total amount to be recovered through annual fees for FY 1999 is $339.8 million, compared to $360.2 million for FY 1998.

In the FY 1995 final fee rule (June 20, 1995; 60 FR 32218), the NRC stated that it would stabilize annual fees as follows:

For FY 1996 through FY 1999, the NRC would adjust the annual fees only by the percentage change (plus or minus) in NRC's total budget authority unless there was a substantial change in the total NRC budget authority or the magnitude of the budget allocated to a specific class of licensees. If either condition occurred, the annual fee base would be recalculated. The percentage change would be adjusted based on changes in 10 CFR Part 170 fees and other adjustments as well as on the number of licensees paying the fees. This method of determining annual fees is the ''percent change'' method. The FY 1996, FY 1997, and FY 1998 annual fees were based on the percent change method.

Rebaselining

The NRC believes that it is appropriate to establish new baseline fees for FY 1999 based on the program changes that have taken place since the baseline fees were established in FY 1995, including those resulting from the agency's strategic planning efforts, downsizing, reorganization of agency resources, and the proposed addition of a new annual fee class (spent fuel storage/reactor decommissioning) as previously described. In addition, there have been several fee policy changes since FY 1995. Fee policy changes include the elimination of renewal fees in FY 1996 for most materials licensees, the proposed elimination of amendment fees for these licensees in FY 1999, and the inclusion of these costs in the materials licensees' annual fees.

Rebaselining Options

The NRC is specifically seeking public comment on two optional rebaselining methods for establishing the FY 1999 annual fees:

Option A, rebaselining without a cap; and

Option B, rebaselining with a cap so that no licensee's annual fee increases more than 50 percent from FY 1998.

Option A would result in a reduction in annual fees from FY 1998 of approximately 6.8 percent for each operating power reactor, which includes the proposed spent fuel storage/decommissioning annual fee to be assessed to these licensees, and reductions of approximately 7 to 49 percent for certain materials licensees. However, annual fees would increase dramatically for certain other licensees. For example, rebaselining without a cap would result in an increase of approximately 112 percent for conventional mills for extraction of uranium from uranium ores, 212 percent for solution mining licensees, 120 percent for transportation cask users, and up to approximately 57 percent for certain other materials licensees. Factors contributing to the annual fees increases are changes in budgeted costs for those classes of

licensees, the increased hourly rates, decreases in the numbers of licensees and, for the smaller materials licenses, the results of the biennial review of Part 170 fees required by the CFO Act. The biennial review shows that the average number of professional hours to conduct inspections and to review new license applications for materials licenses increased for some fee categories and decreased for other fee categories. The average time to conduct inspections and the average time to review new license applications for the smaller materials license fee categories are used to allocate the materials budget for rebaselining the annual fees because they reflect the complexity of the license. Increases in the average professional time for inspections and reviews of new license applications result in increased annual fees for the affected fee categories if all else remains the same. In addition, rebaselining reflects the renewal and amendment costs that would be included in the annual fee for these materials licensees, which were not included in FY 1995.

Option B would also result in annual fee decreases for FY 1999 for operating power reactor licensees and certain materials licensees and increases for other licensees. However, the increases would be no more than 50 percent of the FY 1998 annual fee. The decreases for certain licensees under Option B would be slightly less than under Option A because the 50 percent cap on annual fee increases would result in approximately $700,000 being added to the annual fee assessed to other licensees who pay annual fees. Because approximately 80 percent of the FY 1999 surcharge would be assessed to operating power reactors, the net result of Option B would be a reduction of approximately 6.75 percent in annual fees for FY 1999 for operating power reactors compared to a reduction of approximately 6.95 percent under Option A, a difference of approximately $6,000 for each power reactor. The decreases under both options include the new spent fuel storage and reactor decommissioning annual fee to be assessed to operating power reactor licensees. Other licensees whose rebaselined annual fees do not increase by 50 percent or more would also pay slightly more under Option B than they would under Option A.

Table III below shows the FY 1999 proposed annual fees under both rebaselining options for representative categories of licensees.

Table III

Class of licensees	Proposed FY 1999 annual fee	
	Option A (without a cap)	Option B (with a cap)
Power Reactors (including spent fuel storage/reactor decommissioning annual fee)	$2,769,000	$2,775,000
Spent fuel storage/reactor decommissioning	199,000	199,000
Nonpower Reactors	85,900	85,600
High Enriched Uranium Fuel Facility	3,281,000	3,288,000
Low Enriched Uranium Fuel Facility	1,100,000	1,103,000
UF_6 Conversion Facility	472,000	473,000
Uranium Mills	131,000	92,100
Solution Mining	109,000	52,100
Transportation:		
Users and Fabricators	66,700	66,800
Users only	2,200	1,500
Typical Materials Licenses:		
Radiographers	14,700	14,700
Well loggers	9,900	10,000
Gauge users	2,600	2,500
Broad scope medical	27,800	27,800
Broad scope manufacturers	26,000	24,800

The annual fees assessed to each class of licensees includes a surcharge to recover those NRC budgeted costs that are not directly or solely attributable to the classes of licensees but must be recovered from the licensees to comply with the requirements of OBRA–90. The FY 1999 budgeted costs that would be recovered in the surcharge from all licensees are shown in Table IV.

TABLE IV—SURCHARGE

Category of costs	FY 1999 budgeted costs ($, M)
1. Activities not attributable to an existing NRC licensee or class of licensee:	
a. International activities	6.3
b. Agreement State oversight	6.4
c. Low-level waste disposal generic activities, and	4.1
d. Site decommissioning management plan activities not recovered under Part 170	4.6
2. Activities not assessed Part 170 licensing and inspection fees or Part 171 annual fees based on existing law or Commission policy:	
a. Fee exemption for nonprofit education institutions	6.9
b. Licensing and inspection activities associated with other Federal agencies	2.8
c. Costs not recovered from small entities under 10 CFR 171.16(c)	5.3
3. Activities supporting NRC operating licensees and others:	
a. Regulatory support to Agreement States	14.6
b. Decommissioning/reclamation, except those related to power reactors	4.2

TABLE IV—SURCHARGE—Continued

Category of costs	FY 1999 budgeted costs ($, M)
Total Budgeted Costs	55.2

The NRC would continue to allocate the surcharge costs, except LLW surcharge costs, to each class of licensees based on the percent of budget for that class. The NRC would continue to allocate the LLW surcharge costs based on the volume disposed by the certain classes of licensees. The proposed surcharge costs allocated to each class are included in the annual fee that would be assessed to each licensee. The FY 1999 surcharge costs that would be allocated to each class of licensee are shown in Table V.

TABLE V.—ALLOCATION OF SURCHARGE

	LLW surcharge		Non-LLW surcharge		Total surcharge $,M
	Percent	$,M	Percent	$,M	
Operating power reactors	74	3.0	80.3	41.0	44.0
Spent fuel storage/reactor decommissioning			6.3	3.2	3.2
Nonpower reactors			0.1	0.0	0.0
Fuel facilities	8	0.4	5.0	2.6	2.9
Materials users	18	0.7	5.9	3.1	3.8
Transportation			1.0	0.5	0.5
Rare earth facilities			0.1	0.0	0.0
Uranium recovery			1.3	0.7	0.7
Total Surcharge		4.1		51.1	55.2

The budgeted costs allocated to each class of licensees and the calculation of the rebaselined fees are described in 3. and 4. below. The workpapers which support this proposed rule show in detail the allocation of NRC budgeted resources for each class of licensee and how the fees are calculated. The workpapers may be examined at the NRC Public Document Room, 2120 L Street NW (Lower Level), Washington, DC 20555–0001.

Because the final FY 1999 fee rule will be a ''major'' final action as defined by the Small Business Regulatory Enforcement Fairness Act of 1996, the NRC's fees for FY 1999 would become effective 60 days after publication of the final rule in the **Federal Register**. The NRC will send an invoice for the amount of the annual fee upon publication of the FY 1999 final rule to reactors and major fuel cycle facilities. For these licensees, payment would be due on the effective date of the FY 1999 rule. Those materials licensees whose license anniversary date during FY 1999 falls before the effective date of the final FY 1999 final rule would be billed during the anniversary month of the license and continue to pay annual fees at the FY 1998 rate in FY 1999. Those materials licensees whose license anniversary date falls on or after the effective date of the final FY 1999 final rule would be billed at the FY 1999 revised rates during the anniversary month of the license and payment would be due on the date of the invoice.

In addition to comments on the rebaselining method for determining FY 1999 annual fees, public comments are also being sought on whether the NRC should, in future years, continue to use the percent change method and rebaseline fees every several years as established in the FY 1995 fee rule statement of considerations, or return to a policy of rebaselining annual fees every year.

3. Revised Fuel Cycle and Uranium Recovery Matrixes

The NRC is proposing to use revised matrixes in the determination of annual fees for fuel facility and uranium recovery licensees. As part of the rebaselining efforts, the NRC is proposing to use a revised matrix depicting the categorization of fuel facility and uranium recovery licenses by authorized material and use/activity and the relative programmatic effort associated with each category.

a. Fuel Facility Matrix

The NRC is proposing to use a revised fuel facility matrix based on the commensurate level of regulatory effort related to the various fuel facility categories from both safety and safeguards perspectives. The revised matrix results in the annual fees more accurately reflecting our current costs of providing generic and other regulatory services to each fuel facility type.

The FY 1999 budgeted costs of approximately $16.3 million to be recovered in annual fees assessed to the fuel facility class is allocated to the individual fuel facility licensees based on the revised matrix. The revisions to the matrix take into account changes in process operations at certain fuel facilities. The revised matrix also explicitly recognizes the addition of the uranium enrichment plants to the fee base and a reduction of three licensees (B&W Parks Township, B&W Research and General Atomic) as the result of the termination of licensed activities. In the revised matrix (which is included in our workpapers that we are making public), licensees are grouped into five categories according to their licensed activities (i.e., nuclear material enrichment, processing operations and material form) and according to the level, scope, depth of coverage and rigor of generic regulatory programmatic effort applicable to each category from safety and safeguards perspectives. This methodology can be applied to determine fees for new licensees, current licensees, licensees in unique license situations, and certificate holders.

The methodology is amenable to changes in the number of licensees or certificate holders, licensed-certified material/activities, and total programmatic resources to be recovered through annual fees. When a license or certificate is modified, given that NRC

recovers approximately 100 percent of its generic regulatory program costs through fee recovery, this fuel facility fee methodology may result in a change in fee category and may have an effect on the fees assessed to other licensees and certificate holders. For example, if a fuel facility licensee amended its license/certificate in such a way that it resulted in them not being subject to Part 171 fees applicable to fuel facilities, the budget for the safety and/or safeguards component would be spread among those remaining licensees/certificate holders, resulting in a higher fee for those remaining in the fee category.

The methodology is applied as follows. First, a fee category is assigned based on the nuclear material and activity authorized by license or certificate. Although a licensee/certificate holder may elect not to fully utilize a license/certificate, the license/certificate is still used as the source for determining authorized nuclear material possession and use/activity. Next, the category and license/certificate information are used to determine where the licensee/certificate holder fits into the matrix. The matrix depicts the categorization of licensees/certificate holders by authorized material types and use/activities and the relative programmatic effort associated with each category. The programmatic effort (expressed as a value in the matrix) reflects the safety and safeguards risk significance associated with the nuclear material and use/activity, and the commensurate generic regulatory program (i.e., scope, depth and rigor).

The effort factors for the various subclasses of fuel facility licensees are as follows:

	No. of facilities	Effort factors	
		Safety	Safeguards
High Enriched Uranium Fuel	2	91 (33.1%)	76 (54.7%)
Enrichment	2	70 (25.5%)	34 (24.5%)
Low Enriched Uranium Fuel	4	88 (32.0%)	24 (17.3%)
UF6 Conversion	1	8 (2.9%)	3 (2.2%)
Limited Operations Facility	1	12 (4.4%)	0 (0%)
Others	1	6 (2.2%)	2 (1.4%)

These effort factors are applied to the $16.3 million total annual fee amount. This amount includes the low level waste (LLW) surcharge and other surcharges allocated to the fuel facility class.

b. Uranium Recovery Matrix

Of the $2.1 million total budgeted costs allocated to the uranium recovery class to be recovered through annual fees, approximately $870,000 would be assessed to the DOE to recover the costs associated with DOE facilities under the Uranium Mill Tailings Radiation Control Act of 1978 (UMTRCA). The remaining $1.3 million would be recovered through annual fees assessed to conventional mills, solution mining uranium mills, and mill tailings disposal facilities. Because the proposed FY 1999 annual fees would result in certain uranium recovery licensees going from an annual billing process based on the anniversary date of their license to quarterly billing, those licensees would be billed upon publication of the final FY 1999 rule for the balance of the full FY 1999 annual fee. Payment of the balance of the FY 1999 annual fee would be due on the effective date of the FY 1999 rule.

The NRC is proposing to revise the matrix established in FY 1995 for establishing the annual fees for the conventional mills, solution mining uranium mills, and mill tailings disposal facilities. The revised matrix reflects NRC's significantly increased efforts related to groundwater concerns for in-situ licenses and its somewhat increased efforts related to groundwater concerns for conventional mills. The revised matrix also reflects an increase in regulatory efforts related to waste operations for in-situ licenses. The matrix has also been updated to reflect the changes in the number of licensees within each fee category. The number of conventional mills has decreased from 4 in FY 1995 to 3 in FY 1999 and the number of licensees in the solution mining fee category has increased by 1.

The methodology for establishing Part 171 annual fees for uranium recovery licensees has not changed:

(1) The methodology identifies three categories of licenses: conventional uranium mills, solution mining uranium mills, and mill tailings disposal facilities. Each of these categories benefits from the generic uranium recovery program;

(2) The matrix relates the category and the level of benefit, by program element and subelement;

(3) The two major program elements of the generic uranium recovery program are activities related to facility operations and those related to facility closure;

(4) Each of the major program elements was further divided into three subelements;

(5) The three major subelements of generic activities related to uranium facility operations are activities related to the operation of the mill, activities related to the handling and disposal of waste, and activities related to prevention of groundwater contamination. The three major subelements of generic activities related to uranium facility closure are activities related to decommissioning of facilities and cleanup of land, reclamation and closure of the tailings impoundment, and cleanup of contaminated groundwater. Weighted factors were assigned to each program element and subelement.

The applicability of the generic program in each subelement to each uranium recovery category was qualitatively estimated as either significant, some, minor, or none.

The resulting relative weighted factor per facility for the various subclasses and the proposed FY 1999 annual fee for each are as follows:

	Number of facilities	Level of benefit		
		Category weight	Total weight	
			Value	Percent
Class I facilities	3	770	2310	31

	Number of facilities	Level of benefit		
		Category weight	Total weight	
			Value	Percent
Class II facilities	7	645	4515	61
11e(2) disposal	1	475	475	6
11e(2) disposal incidental to existing tailings sites	2	75	150	2

4. Annual Fee Determination for Other Classes

a. Power Reactor Licensees

The approximately $267.3 million in budgeted costs to be recovered through annual fees assessed to operating power reactors would be divided equally among the 104 operating reactors. This results in a proposed FY 1999 annual fee of $2,570,000 per reactor under Option A, or $2,576,000 under Option B. In addition, each operating reactor would be assessed the proposed spent fuel storage/reactor decommissioning annual fee, which for FY 1999 is $199,000 for each power reactor. This would result in a total FY 1999 annual fee of $2,769,000 under Option A, or $2,775,000 under Option B, for each operating power reactor.

b. Spent Fuel Storage/Reactor Decommissioning

For FY 1999, budgeted costs of approximately $24.8 million are to be recovered through annual fees assessed to Part 50 power reactors and to Part 72 licensees who do not hold a Part 50 license. The costs would be divided equally among the 125 licensees, resulting in a proposed FY 1999 annual fee of $199,000 for each licensee under both Option A and Option B.

c. Nonpower Reactors

Budgeted costs for FY 1999 of approximately $343,400 are to be recovered from four nonpower reactors subject to annual fees. This results in a proposed FY 1999 annual fee of $85,900 under Option A, or $85,600 under Option B.

d. Rare Earth Facilities

The FY 1999 budgeted costs of approximately $91,200 for rare earth facilities to be recovered through annual fees would be spread uniformly among the three licensees who have a specific license for receipt and processing of source material. This results in a proposed annual fee of $30,400 under Option A, or $30,500 under Option B for each rare earth facility.

e. Materials Users

To equitably and fairly allocate the $30.5 million in FY 1999 budgeted costs to be recovered in annual fees assessed to the approximately 5700 diverse material users and registrants, the NRC has continued the methodology used in FY 1995 to establish baseline annual fees for this class. The annual fee is based on the Part 170 application fees and an estimated cost for inspections. Because the application fees and inspection costs are indicative of the complexity of the license, this approach continues to provide a proxy for allocating the generic and other regulatory costs to the diverse categories of licensees based on how much it costs NRC to regulate each category. The fee calculation also continues to consider the inspection frequency (priority), which is indicative of the safety risk and resulting regulatory costs associated with the categories of licensees. The annual fee for these categories of licensees is developed as follows:

Annual fee = (Application Fee + (Average Inspection Cost divided by Inspection Priority)) multiplied by the constant + (Unique Category Costs).

The constant is the multiple necessary to recovery $30.5 million and is 1.3 for FY 1999. The unique category costs are any special costs that the NRC has budgeted for a specific category of licensees. For FY 1999, unique cost of approximately $955,400 were identified for the medical development program which is attributable to medical licensees. The proposed annual fees for each fee category under Option A and Option B are shown in § 171.16(d).

f. Transportation

Of the approximately $3.6 million in FY 1999 budgeted costs to be recovered through annual fees assessed to the transportation class of licensees, approximately $870,000 would be recovered from annual fees assessed to DOE based on the number of Part 71 Certificates of Compliance DOE holds. Of the remaining $2.7 million, approximately 10 percent would be allocated to holders of approved quality assurance plans authorizing use, and approximately 90 percent would be allocated to holders of approved quality assurance plans authorizing design, fabrication, and use. This results in proposed FY 1999 annual fees of $2,200 under Option A or $1,500 under Option B for holders of approved quality assurance plans for use only. The proposed FY 1999 annual fees for holders of approved quality assurance plans for design, fabrication, and use would be $66,700 under Option A, or $66,800 under Option B.

5. Administrative Amendments

a. Section 171.13 would be amended to establish an annual fee for power reactors in a decommissioning or possession only status.

b. Section 171.15 would be revised to as follows:

(1) The heading for § 171.15 would be revised to read: Section 171.15 Annual Fees: Reactor licenses and independent spent fuel storage licenses

(2) Paragraph (b) of § 171.15 would be revised in its entirety to establish the FY 1999 annual fees for operating power reactors, power reactors in decommissioning or possession only status, and Part 72 licensees who do not hold Part 50 licenses. Fiscal year references would be changed from FY 1998 to FY 1999. The activities comprising the base annual fees and the additional charge (surcharge) are listed in § 171.15(b) and (c) for convenience purposes.

Each operating power reactor would pay an FY 1999 annual fee of $2,769,000 under Option A or $2,775,000 under Option B, which includes the proposed annual fee of $199,000 for spent fuel storage/reactor decommissioning. Each power reactor in decommissioning or possession only status and each Part 72 licensee who does not hold a Part 50 license would pay the spent fuel storage/reactor decommissioning annual fee of $199,000 under Option A or Option B in FY 1999.

(3) Paragraph (e) of § 171.15 would be revised to show the amount of the FY 1999 annual fee for nonpower (test and research) reactors. The NRC would continue to grant exemptions from the annual fee to Federally-owned and State-owned research and test reactors that meet the exemption criteria specified in § 171.11(a)(2).

(4) Paragraph (f) of § 171.15 would be revised to change fiscal year date references.

c. Section 171.16 would be amended as follows:

(1) Section 171.16(c) covers the fees assessed for those licensees that can qualify as small entities under NRC size standards. A materials licensee may pay a reduced annual fee if the licensee qualifies as a small entity under the NRC's size standards and certifies that it is a small entity using NRC Form 526. This section would be revised to clarify that failure to file a small entity certification in a timely manner could form the basis for the denial of any refund that would otherwise be due. The NRC would continue to assess two fees for licensees that qualify as small entities under the NRC's size standards. In general, licensees with gross annual receipts of $350,000 to $5 million would pay a maximum annual fee of $1,800. A second or lower-tier small entity fee of $400 is in place for small entities with gross annual receipts of less than $350,000 and small governmental jurisdictions with a population of less than 20,000. No change in the amount of the small entity fees is being proposed because the small entity fees are not based on budgeted costs but are established at a level to reduce the impact of fees on small entities. The small entity fees are shown in the proposed rule for convenience.

(2) Section 171.16(d) would be revised to establish the FY 1999 annual fees for materials licensees, including Government agencies, licensed by the NRC. The amount or range of the proposed FY 1999 annual fees for materials licenses range from $600 for a license authorizing the use of source material for shielding, to $27,800 for a license of broad scope for human use of byproduct, source, or special nuclear material. Because of rounding, the fees for most materials licensees would be the same under Option A and Option B. The proposed annual fee for the ''master'' materials licenses of broad scope issued to Government agencies $351,000 under Option A or Option B.

(3) Footnote 1 of § 171.16(d) would be amended to provide a waiver of the annual fees for materials licensees, and holders of certificates, registrations, and approvals, who either filed for termination of their licenses or approvals or filed for possession only/storage only licenses before October 1, 1998, and permanently ceased licensed activities entirely by September 30, 1998. All other licensees and approval holders who held a license or approval on October 1, 1998, would be subject to the FY 1999 annual fees.

Holders of new licenses issued during FY 1999 would be subject to a prorated annual fee in accordance with the current proration provision of § 171.17. For example, those new materials licenses issued during the period October 1 through March 31 of the FY would be assessed one-half the annual fee in effect on the anniversary date of the license. New materials licenses issued on or after April 1, 1999, would not be assessed an annual fee for FY 1999. Thereafter, the full annual fee would be due and payable each subsequent fiscal year on the anniversary date of the license. Beginning June 11, 1996 (the effective date of the FY 1996 final rule), affected materials licensees are subject to the annual fee in effect on the anniversary date of the license. The anniversary date of the materials license for annual fee purposes is the first day of the month in which the original license was issued.

d. Section 171.19 Payment, would be amended as follows:

(1) Section 171.19(b) would be revised to update the fiscal year references, to include a billing process for those licensees whose annual fee for the previous fiscal year was based on the anniversary date of the license and whose revised annual fee for the current fiscal year would be based on quarterly billing, and to give credit for partial payments made by certain licensees in FY 1999 toward their FY 1999 annual fees. The NRC anticipates that the first, second, and third quarterly payments for FY 1999 will have been made by operating power reactor licensees and some large materials licensees before the final rule becomes effective. Therefore, the NRC would credit payments received for those quarterly annual fee assessments toward the total annual fee to be assessed. The NRC would adjust the fourth quarterly invoice to recover the full amount of the revised annual fee or to make refunds, as necessary. Payment of the annual fee is due on the date of the invoice and interest accrues from the invoice date. However, interest would be waived if payment is received within 30 days from the invoice date.

(2) Section 171.19(c) would be revised to update fiscal year references.

As in FY 1998, the NRC would continue to bill annual fees for most materials licenses on the anniversary date of the license (licensees whose annual fees are $100,000 or more would continue to be assessed quarterly). The annual fee assessed would be the fee in effect on the license anniversary date, unless the annual fee for the prior year was less than $100,000 and the revised annual fee for the current fiscal year is $100,000 or more. In this case, the revised amount would be billed to the licensees upon publication of the final rule in the **Federal Register**, adjusted for any annual fee payments already made for that fiscal year based on the anniversary month billing process. For FY 1999, the anniversary date billing process applies to those materials licenses in the following fee categories: 1C, 1D, 2A(2) Other, 2A(3), 2A(4), 2B, 2C, 3A through 3P, 4A through 9D, 10A, and 10B. For annual fee purposes, the anniversary date of the materials license is considered to be the first day of the month in which the original materials license was issued. For example, if the original materials license was issued on June 17 then, for annual fee purposes, the anniversary date of the materials license is June 1 and the licensee would continue to be billed in June of each year for the annual fee in effect on June 1. Materials licensees with anniversary dates in FY 1999 before the effective date of the FY 1999 final rule would be billed during the anniversary month of the license and continue to pay annual fees at the FY 1998 rate in FY 1999. Those materials licensees with license anniversary dates falling on or after the effective date of the FY 1999 final rule would be billed at the FY 1999 revised rates during the anniversary month of their license. Payment would be due on the date of the invoice.

The NRC reemphasizes that the annual fee will be assessed based on whether a licensee holds a valid NRC license that authorizes possession and use of radioactive material.

In summary, the NRC is proposing to:

1. Establish a new spent fuel storage/reactor decommissioning annual fee in 10 CFR 171.15, and eliminate the current annual fee in 10 CFR 171.16 for independent spent fuel storage licenses. The proposed annual fee would be assessed to all Part 50 power reactor licensees, including those in decommissioning or possession only status, and to those Part 72 licensees who do not hold a Part 50 license;

2. Establish new baseline annual fees for FY 1999. Because the rebaselined fees would result in significant increases for some licensees, the NRC is seeking public comment on two potential methods for establishing the FY 1999 annual fees: (1) rebaseline the fees without a cap on fee increases, or (2) rebaseline the annual fees with a cap so that no licensees' annual fee increases more than 50 percent from FY 1998; and

3. Use revised matrixes for allocating the fuel facility and uranium recovery budgeted costs to licensees in those fee classes.

III. Plain Language

The Presidential Memorandum dated June 1, 1998, entitled, ''Plain Language

in Government Writing,'' directed that the Federal government's writing be in plain language (63 FR 31883; June 10, 1998). The NRC requests comments on this proposed rule specifically with respect to the clarity and effectiveness of the language used. Comments on the language used should be sent to the NRC as indicated under the **ADDRESSES** heading.

IV. Environmental Impact: Categorical Exclusion

The NRC has determined that this proposed rule is the type of action described in categorical exclusion 10 CFR 51.22(c)(1). Therefore, neither an environmental impact statement nor an environmental impact assessment has been prepared for the proposed regulation. By its very nature, this regulatory action does not affect the environment, and therefore, no environmental justice issues are raised.

V. Paperwork Reduction Act Statement

This proposed rule contains no information collection requirements and, therefore, is not subject to the requirements of the Paperwork Reduction Act of 1995 (44 U.S.C. 3501 *et seq.*).

VI. Regulatory Analysis

With respect to 10 CFR part 170, this proposed rule was developed pursuant to Title V of the Independent Offices Appropriation Act of 1952 (IOAA) (31 U.S.C. 9701) and the Commission's fee guidelines. When developing these guidelines the Commission took into account guidance provided by the U.S. Supreme Court on March 4, 1974, in its decision of *National Cable Television Association, Inc.* v. *United States,* 415 U.S. 36 (1974) and *Federal Power Commission* v. *New England Power Company,* 415 U.S. 345 (1974). In these decisions, the Court held that the IOAA authorizes an agency to charge fees for special benefits rendered to identifiable persons measured by the ''value to the recipient'' of the agency service. The meaning of the IOAA was further clarified on December 16, 1976, by four decisions of the U.S. Court of Appeals for the District of Columbia: *National Cable Television Association* v. *Federal Communications Commission,* 554 F.2d 1094 (D.C. Cir. 1976); *National Association of Broadcasters* v. *Federal Communications Commission,* 554 F.2d 1118 (D.C. Cir. 1976); *Electronic Industries Association* v. *Federal Communications Commission,* 554 F.2d 1109 (D.C. Cir. 1976) and *Capital Cities Communication, Inc.* v. *Federal Communications Commission,* 554 F.2d 1135 (D.C. Cir. 1976). These decisions of the Courts enabled the Commission to develop fee guidelines that are still used for cost recovery and fee development purposes.

The Commission's fee guidelines were upheld on August 24, 1979, by the U.S. Court of Appeals for the Fifth Circuit in *Mississippi Power and Light Co.* v. *U.S. Nuclear Regulatory Commission,* 601 F.2d 223 (5th Cir. 1979), *cert. denied,* 444 U.S. 1102 (1980). The Court held that—

(1) The NRC had the authority to recover the full cost of providing services to identifiable beneficiaries;

(2) The NRC could properly assess a fee for the costs of providing routine inspections necessary to ensure a licensee's compliance with the Atomic Energy Act and with applicable regulations;

(3) The NRC could charge for costs incurred in conducting environmental reviews required by NEPA;

(4) The NRC properly included the costs of uncontested hearings and of administrative and technical support services in the fee schedule;

(5) The NRC could assess a fee for renewing a license to operate a low-level radioactive waste burial site; and

(6) The NRC's fees were not arbitrary or capricious.

With respect to 10 CFR part 171, on November 5, 1990, the Congress passed Public Law 101–508, the Omnibus Budget Reconciliation Act of 1990 (OBRA–90) which required that for FYs 1991 through 1995, approximately 100 percent of the NRC budget authority be recovered through the assessment of fees. OBRA–90 was amended in 1998 to extend the 100 percent fee recovery requirement for NRC through FY 1999. To accomplish this statutory requirement, the NRC, in accordance with § 171.13, is publishing the proposed amount of the FY 1999 annual fees for operating reactor licensees, fuel cycle licensees, materials licensees, and holders of Certificates of Compliance, registrations of sealed source and devices and QA program approvals, and Government agencies. OBRA–90 and the Conference Committee Report specifically state that—

(1) The annual fees be based on the Commission's FY 1999 budget of $469.8 million less the amounts collected from Part 170 fees and the funds directly appropriated from the NWF to cover the NRC's high level waste program;

(2) The annual fees shall, to the maximum extent practicable, have a reasonable relationship to the cost of regulatory services provided by the Commission; and

(3) The annual fees be assessed to those licensees the Commission, in its discretion, determines can fairly, equitably, and practicably contribute to their payment.

In addition, the NRC's FY 1999 appropriations language provides that $3.2 million appropriated from the General Fund for activities related to regulatory reviews and other assistance provided to the Department of Energy and other Federal agencies be excluded from fee recovery.

10 CFR Part 171, which established annual fees for operating power reactors effective October 20, 1986 (51 FR 33224; September 18, 1986), was challenged and upheld in its entirety in *Florida Power and Light Company* v. *United States,* 846 F.2d 765 (D.C. Cir. 1988), *cert. denied,* 490 U.S. 1045 (1989).

The NRC's FY 1991 annual fee rule was largely upheld by the D.C. Circuit Court of Appeals in *Allied Signal* v. *NRC,* 988 F.2d 146 (D.C. Cir. 1993).

VII. Regulatory Flexibility Analysis

The NRC is required by the Omnibus Budget Reconciliation Act of 1990 to recover approximately 100 percent of its budget authority through the assessment of user fees. OBRA–90 further requires that the NRC establish a schedule of charges that fairly and equitably allocates the aggregate amount of these charges among licensees.

This proposed rule establishes the schedules of fees that are necessary to implement the Congressional mandate for FY 1999. The proposed rule would result in increases in the annual fees charged to certain licensees and holders of certificates, registrations, and approvals, and decreases in annual fees for others. The Regulatory Flexibility Analysis, prepared in accordance with 5 U.S.C. 604, is included as Appendix A to this proposed rule. The Small Business Regulatory Enforcement Fairness Act of 1996 (SBREFA) was signed into law on March 29, 1996. The SBREFA requires all Federal agencies to prepare a written compliance guide for each rule for which the agency is required by 5 U.S.C. 604 to prepare a regulatory flexibility analysis. Therefore, in compliance with the law, Attachment 1 to the Regulatory Flexibility Analysis is the small entity compliance guide for FY 1999.

VIII. Backfit Analysis

The NRC has determined that the backfit rule, 10 CFR 50.109, does not apply to this proposed rule and that a backfit analysis is not required for this proposed rule. The backfit analysis is not required because these proposed amendments do not require the modification of or additions to systems, structures, components, or the design of

a facility or the design approval or manufacturing license for a facility or the procedures or organization required to design, construct or operate a facility.

List of Subjects

10 CFR Part 170

Byproduct material, Import and export licenses, Intergovernmental relations, Non-payment penalties, Nuclear materials, Nuclear power plants and reactors, Source material, Special nuclear material.

10 CFR Part 171

Annual charges, Byproduct material, Holders of certificates, registrations, approvals, Intergovernmental relations, Non-payment penalties, Nuclear materials, Nuclear power plants and reactors, Source material, Special nuclear material.

For the reasons set out in the preamble and under the authority of the Atomic Energy Act of 1954, as amended, and 5 U.S.C. 553, the NRC is proposing to adopt the following amendments to 10 CFR parts 170 and 171.

PART 170—FEES FOR FACILITIES, MATERIALS, IMPORT AND EXPORT LICENSES, AND OTHER REGULATORY SERVICES UNDER THE ATOMIC ENERGY ACT OF 1954, AS AMENDED

1. The authority citation for Part 170 continues to read as follows:

Authority: 31 U.S.C. 9701, 96 Stat. 1051; sec. 301, Pub. L. 92–314, 86 Stat. 222 (42 U.S.C. 2201w); sec. 201, Pub. L. 93–4381, 88 Stat. 1242, as amended (42 U.S.C. 5841); sec. 205, Pub. L. 101–576, 104 Stat. 2842, (31 U.S.C. 901).

2. In § 170.2, paragraph (r) is added to read as follows:

§ 170.2 Scope.

* * * * *

(r) An applicant for or a holder of a certificate of compliance issued under 10 CFR Part 76.

3. In § 170.3, the definition of the terms *Inspections, Materials license,* and *Special projects* are revised to read as follows:

§ 170.3 Definitions.

* * * * *

Inspection means:

(1) Routine inspections designed to evaluate the licensee's activities within the context of the licensee having primary responsibility for protection of the public and environment;

(2) Non-routine inspections in response or reaction to an incident, allegation, followup to inspection deficiencies or inspections to determine implementation of safety issues. A non-routine or reactive inspection has the same purpose as the routine inspection;

(3) Reviews and assessments of licensee performance;

(4) Evaluations, such as those performed by Diagnostic Evaluation Teams; or

(5) Incident investigations.

* * * * *

Materials license means a license, certificate, approval, registration, or other form of permission issued by the NRC under the regulations in 10 CFR parts 30, 32 through 36, 39, 40, 61, 70, 71, 72 and 76.

* * * * *

Special projects means those requests submitted to the Commission for review for which fees are not otherwise specified in this chapter. Examples of special projects include, but are not limited to, topical reports reviews, early site reviews, waste solidification facilities, route approvals for shipment of radioactive materials, services provided to certify licensee, vendor, or other private industry personnel as instructors for Part 55 reactor operators, reviews of financial assurance submittals that do not require a license amendment, reviews of responses to Confirmatory Action Letters, reviews of uranium recovery licensees' land-use survey reports, and reviews of 10 CFR 50.71 final safety analysis reports. As used in this part, special projects does not include requests/reports submitted to the NRC:

(1) In response to a Generic Letter or NRC Bulletin which does not result in an amendment to the license, does not result in the review of an alternate method or reanalysis to meet the requirements of the Generic Letter, or does not involve an unreviewed safety issue;

(2) In response to an NRC request (at the Associate Office Director level or above) to resolve an identified safety, safeguards or environmental issue, or to assist the NRC in developing a rule, regulatory guide, policy statement, generic letter, or bulletin; or

(3) As a means of exchanging information between industry organizations and the NRC for the purpose of supporting generic regulatory improvements or efforts.

* * * * *

4. Section 170.5 is revised to read as follows:

§ 170.5 Communications.

All communications concerning the regulations in this part should be addressed to the Chief Financial Officer, U.S. Nuclear Regulatory Commission, Washington, DC 20555–0001. Communications may be delivered in person at the Commission's offices at 11555 Rockville Pike, Rockville, MD.

5. In § 170.11, paragraph (a)(11) is removed and reserved and paragraph (a)(12) is added to read as follows:

§ 170.11 Exemptions.

(a) * * *

(12) A performance assessment or evaluation for which the licensee volunteers at the NRC's request and which is selected by the NRC.

* * * * *

6. Section 170.12 is revised to read as follows:

§ 170.12 Payment of fees.

(a) *Application fees.* Each application for which a fee is prescribed must be accompanied by a remittance for the full amount of the fee. The NRC will not issue a new license or an amendment increasing the scope of an existing license to a higher fee category or adding a new fee category prior to receiving the prescribed application fee. The application fee(s) is charged whether the Commission approves the application or not. The application fee(s) is also charged if the applicant withdraws the application.

(b) *Licensing fees.* (1) Licensing fees will be assessed to recover full costs for—

(i) The review of applications for new licenses and approvals;

(ii) The review of applications for amendments to and renewal of existing licenses or approvals;

(iii) Preapplication consultations and reviews; and

(iv) The full cost for project managers assigned to a specific plant or facility, excluding leave time and time spent on generic activities (such as rulemaking).

(2) Full cost fees will be determined based on the professional staff time and appropriate contractual support services expended. The full cost fees for professional staff time will be determined at the professional hourly rates in effect the time the service was provided. The full cost fees are payable upon notification by the Commission.

(3) The NRC intends to bill each applicant or licensee at quarterly intervals for all accumulated costs for each application the applicant or licensee has on file for NRC review, until the review is completed, except for costs that were deferred before August 9, 1991. The deferred costs will be billed as described in paragraphs (b)(5), (b)(6) and (b)(7) of this section. Each bill will identify the applications and documents submitted for review and the costs related to each.

(4) The NRC intends to bill each applicant or licensee for costs related to project manager time on a quarterly basis. Each bill will identify the costs related to project manager time.

(5) Costs for review of an application for renewal of a standard design certification which have been deferred prior to the effective date of this rule must be paid as follows: The full cost of review for a renewed standard design certification must be paid by the applicant for renewal or other entity supplying the design to an applicant for a construction permit, combined license issued under 10 CFR part 52, or operating license, as appropriate, in five (5) equal installments. An installment is payable each of the first five times the renewed certification is referenced in an application for a construction permit, combined license, or operating license. The applicant for renewal shall pay the installment, unless another entity is supplying the design to the applicant for the construction permit, combined license, or operating license, in which case the entity shall pay the installment. If the design is not referenced, or if all of the costs are not recovered, within fifteen years after the date of renewal of the certification, the applicant for renewal shall pay the costs for the renewal, or remainder of those costs, at that time.

(6) Costs for the review of an application for renewal of an early site permit which have been deferred prior to the effective date of this rule will continue to be deferred as follows: The holder of the renewed permit shall pay the applicable fees for the renewed permit at the time an application for a construction permit or combined license referencing the permit is filed. If, at the end of the renewal period of the permit, no facility application referencing the early site permit has been docketed, the permit holder shall pay any outstanding fees for the permit.

(7) (i) The full cost of review for a standardized design approval or certification that has been deferred prior to the effective date of the rule must be paid by the holder of the design approval, the applicant for certification, or other entity supplying the design to an applicant for a construction permit, combined license issued under 10 CFR part 52, or operating license, as appropriate, in five (5) equal installments. An installment is payable each of the first five times the approved/certified design is referenced in an application for a construction permit, combined license issued under 10 CFR part 52, or operating license. In the case of a standard design certification, the applicant for certification shall pay the installment, unless another entity is supplying the design to the applicant for the construction permit, combined license, or operating license, in which case the other entity shall pay the installment.

(ii) In the case of a design which has been approved and for which an application for certification is pending, no fees are due until after the certification is granted. If the design is not referenced, or if all costs are not recovered, within fifteen years after the date of certification, the applicant shall pay the costs, or remainder of those, at the time.

(iii) In the case of a design for which a certification has been granted, if the design is not referenced, or if all costs are not recovered, within fifteen years after the date of the certification, the applicant shall pay the costs for the review of the application, or remainder of those costs, at that time.

(c) *Inspection fees.* (1) Inspection fees will be assessed to recover full cost for each resident inspector (including the senior resident inspector), assigned to a specific plant or facility. The fees assessed will be based on the number of hours that each inspector assigned to the plant or facility is in an official duty status (i.e., all time in a non-leave status will be billed), and the hours will be billed at the appropriate hourly rate established in 10 CFR 170.20. Resident inspectors' time related to a specific inspection will be included in the fee assessed for the specific inspection in accordance with paragraph (c)(2) of this section.

(2) Inspection fees will be assessed to recover the full cost for each specific inspection, including plant- or licensee-specific performance reviews and assessments, evaluations, and incident investigations. For inspections that result in the issuance of an inspection report, fees will be assessed for costs incurred up to approximately 30 days after the inspection report is issued. The costs for these inspections include preparation time, time on site, documentation time, and follow-up activities and any associated contractual service costs, but exclude the time involved in the processing and issuance of a notice of violation or civil penalty.

(3) The NRC intends to bill for resident inspectors' time and for specific inspections subject to full cost recovery on a quarterly basis. The fees are payable upon notification by the Commission.

(d) *Special project fees.* (1) Fees for special projects are based on the full cost of the review. Special projects includes activities such as—

(i) Topical reports;

(ii) Financial assurance submittals that do not require a license amendment;

(iii) Responses to Confirmatory Action Letters;

(iv) Uranium recovery licensees' land-use survey reports; and

(v) 10 CFR 50.71 final safety analysis reports.

(2) The NRC intends to bill each applicant or licensee at quarterly intervals until the review is completed. Each bill will identify the documents submitted for review and the costs related to each. The fees are payable upon notification by the Commission.

(e) *Part 55 review fees.* Fees for Part 55 review services are based on NRC time spent in administering the examinations and tests and any related contractual costs. The fees assessed will also include related activities such as preparing, reviewing, and grading of the examinations and tests. The NRC intends to bill the costs at quarterly intervals to the licensee employing the operators.

(f) *Method of payment.* All license fee payments are to be made payable to the U.S. Nuclear Regulatory Commission. The payments are to be made in U.S. funds by electronic funds transfer such as ACT (Automated Clearing House) using E.D.I. (Electronic Data Interchange), check, draft, money order, or credit card. Payment of invoices of $5,000 or more should be paid via ACT through NRC's Lockbox Bank at the address indicated on the invoice. Credit card payments should be made up to the limit established by the credit card bank at the address indicated on the invoice. Specific written instructions for making electronic payments and credit card payments may be obtained by contacting the License Fee and Accounts Receivable Branch at 301–415–7554. In accordance with Department of the Treasury requirements, refunds will only be made upon receipt of information on the payee's financial institution and bank accounts.

7. Section 170.20 is revised to read as follows:

§ 170.20 Average cost per professional staff-hour.

Fees for permits, licenses, amendments, renewals, special projects, Part 55 requalification and replacement examinations and tests, other required reviews, approvals, and inspections under §§ 170.21 and 170.31 will be calculated using the following applicable professional staff-hour rates:

Reactor Program.

(§ 170.21 Activities) ..... $141 per hour.

Nuclear Materials and Nuclear Waste Program (§ 170.31 Activities).	140 per hour.

8. In § 170.21, the introductory text, Category K, and footnotes 1 and 2 to the table are revised to read as follows:

§ 170.21 Schedule of fees for production and utilization facilities, review of standard referenced design approvals, special projects, inspections and import and export licenses.

Applicants for construction permits, manufacturing licenses, operating licenses, import and export licenses, approvals of facility standard reference designs, requalification and replacement examinations for reactor operators, and special projects and holders of construction permits, licenses, and other approvals shall pay fees for the following categories of services.

SCHEDULE OF FACILITY FEES

[See footnotes at end of table]

Facility categories and type of fees	Fees [1] [2]
* * * * * * *	
K. Import and export licenses:	
Licenses for the import and export only of production and utilization facilities or the export only of components for production and utilization facilities issued under 10 CFR part 110:	
1. Application for import or export of reactors and other facilities and exports of components which must be reviewed by the Commissioners and the Executive Branch, for example, actions under 10 CFR 110.40(b):	
Application—new license	$9,100.
Amendment	$9,100.
2. Application for export of reactor and other components requiring Executive Branch review only, for example, those actions under 10 CFR 110.41(a)(1)–(8):	
Application—new license	$5,600.
Amendment	$5,600.
3. Application for export of components requiring foreign government assurances only:	
Application—new license	$1,700.
Amendment	$1,700.
4. Application for export of facility components and equipment not requiring Commissioner review, Executive Branch review, or foreign government assurances:	
Application—new license	$1,100.
Amendment	$1,100.
5. Minor amendment of any export or import license to extend the expiration date, change domestic information, or make other revisions which do not require in-depth analysis or review:	
Amendment	$210.

[1] Fees will not be charged for orders issued by the Commission under § 2.202 of this chapter or for amendments resulting specifically from the requirements of these types of Commission orders. Fees will be charged for approvals issued under a specific exemption provision of the Commission's regulations under Title 10 of the Code of Federal Regulations (e.g., §§ 50.12, 73.5) and any other sections in effect now or in the future, regardless of whether the approval is in the form of a license amendment, letter of approval, safety evaluation report, or other form. Fees for licenses in this schedule that are initially issued for less than full power are based on review through the issuance of a full power license (generally full power is considered 100 percent of the facility's full rated power). Thus, if a licensee received a low power license or a temporary license for less than full power and subsequently receives full power authority (by way of license amendment or otherwise), the total costs for the license will be determined through that period when authority is granted for full power operation. If a situation arises in which the Commission determines that full operating power for a particular facility should be less than 100 percent of full rated power, the total costs for the license will be at that determined lower operating power level and not at the 100 percent capacity.

[2] Full cost fees will be determined based on the professional staff time and appropriate contractual support services expended. For applications currently on file and for which fees are determined based on the full cost expended for the review, the professional staff hours expended for the review of the application up to the effective date of the final rule will be determined at the professional rates in effect at the time the service was provided. For those applications currently on file for which review costs have reached an applicable fee ceiling established by the June 20, 1984, and July 2, 1990, rules but are still pending completion of the review, the cost incurred after any applicable ceiling was reached through January 29, 1989, will not be billed to the applicant. Any professional staff-hours expended above those ceilings on or after January 30, 1989, will be assessed at the applicable rates established by § 170.20, as appropriate, except for topical reports whose costs exceed $50,000. Costs which exceed $50,000 for any topical report, amendment, revision or supplement to a topical report completed or under review from January 30, 1989, through August 8, 1991, will not be billed to the applicant. Any professional hours expended on or after August 9, 1991, will be assessed at the applicable rate established in § 170.20.

* * * * *

9. Section 170.31 is revised to read as follows:

§ 170.31 Schedule of fees for materials licenses and other regulatory services, including inspections, and import and export licenses.

Applicants for materials licenses, import and export licenses, and other regulatory services and holders of materials licenses, or import and export licenses shall pay fees for the following categories of services. This schedule includes fees for health and safety and safeguards inspections where applicable.

SCHEDULE OF MATERIALS FEES

[See footnotes at end of table]

Category of materials licenses and type of fees [1]	Fee [2] [3]
1. Special nuclear material:	

SCHEDULE OF MATERIALS FEES—Continued

[See footnotes at end of table]

Category of materials licenses and type of fees [1]	Fee [2 3]
A. Licenses for possession and use of 200 grams or more of plutonium in unsealed form or 350 grams or more of contained U–235 in unsealed form or 200 grams or more of U–233 in unsealed form. This includes applications to terminate licenses as well as licenses authorizing possession only:	
Licensing and Inspection	Full Cost.
B. Licenses for receipt and storage of spent fuel at an independent spent fuel storage installation (ISFSI):	
Licensing and inspection	Full Cost.
C. Licenses for possession and use of special nuclear material in sealed sources contained in devices used in industrial measuring systems, including x-ray fluorescence analyzers: [4]	
Application	$640.
D. All other special nuclear material licenses, except licenses authorizing special nuclear material in unsealed form in combination that would constitute a critical quantity, as defined in § 150.11 of this chapter, for which the licensee shall pay the same fees as those for Category 1A: [4]	
Application	$1,300
E. Licenses or certificates for construction and operation of a uranium enrichment facility.	
Licensing and inspection	Full Cost.
2. Source material:	
A.(1) Licenses for possession and use of source material in recovery operations such as milling, in-situ leaching, heap-leaching, refining uranium mill concentrates to uranium hexafluoride, ore buying stations, ion exchange facilities and in processing of ores containing source material for extraction of metals other than uranium or thorium, including licenses authorizing the possession of byproduct waste material (tailings) from source material recovery operations, as well as licenses authorizing the possession and maintenance of a facility in a standby mode:	
Licensing and inspection	Full Cost.
(2) Licenses that authorize the receipt of byproduct material, as defined in Section 11e(2) of the Atomic Energy Act, from other persons for possession and disposal except those licenses subject to fees in Category 2.A.(1):	
Licensing and inspection	Full Cost.
(3) Licenses that authorize the receipt of byproduct material, as defined in Section 11e(2) of the Atomic Energy Act, from other persons for possession and disposal incidental to the disposal of the uranium waste tailings generated by the licensee's milling operations, except those licenses subject to the fees in Category 2.A.(1):	
Licensing and inspection	Full Cost.
B. Licenses which authorize the possession, use, and/or installation of source material for shielding:	
Application	$150.
C. All other source material licenses:	
Application	$5,500.
3. Byproduct material:	
A. Licenses of broad scope for the possession and use of byproduct material issued under Parts 30 and 33 of this chapter for processing or manufacturing of items containing byproduct material for commercial distribution:	
Application	$6,600.
B. Other licenses for possession and use of byproduct material issued under Part 30 of this chapter for processing or manufacturing of items containing byproduct material for commercial distribution:	
Application	$2,400.
C. Licenses issued under §§ 32.72, 32.73, and/or 32.74 of this chapter that authorize the processing or manufacturing and distribution or redistribution of radiopharmaceuticals, generators, reagent kits, and/or sources and devices containing byproduct material. This category does not apply to licenses issued to nonprofit educational institutions whose processing or manufacturing is exempt under 10 CFR 170.11(a)(4). These licenses are covered by fee Category 3D:	
Application	$10,200.
D. Licenses and approvals issued under §§ 32.72, 32.73, and/or 32.74 of this chapter authorizing distribution or redistribution of radiopharmaceuticals, generators, reagent kits, and/or sources or devices not involving processing of byproduct material. This category includes licenses issued under §§ 32.72, 32.73, and/or 32.74 of this chapter to nonprofit educational institutions whose processing or manufacturing is exempt under 10 CFR 170.11(a)(4):	
Application	$2,400.
E. Licenses for possession and use of byproduct material in sealed sources for irradiation of materials in which the source is not removed from its shield (self-shielded units):	
Application	$1,700.
F. Licenses for possession and use of less than 10,000 curies of byproduct material in sealed sources for irradiation of materials in which the source is exposed for irradiation purposes. This category also includes underwater irradiators for irradiation of materials where the source is not exposed for irradiation purposes:	
Application	$3,300.
G. Licenses for possession and use of 10,000 curies or more of byproduct material in sealed sources for irradiation of materials in which the source is exposed for irradiation purposes. This category also includes underwater irradiators for irradiation of materials where the source is not exposed for irradiation purposes:	
Application	$3,400.
H. Licenses issued under Subpart A of Part 32 of this chapter to distribute items containing byproduct material that require device review to persons exempt from the licensing requirements of Part 30 of this chapter. The category does not include specific licenses authorizing redistribution of items that have been authorized for distribution to persons exempt from the licensing requirements of Part 30 of this chapter:	
Application	$2,000.
I. Licenses issued under Subpart A of Part 32 of this chapter to distribute items containing byproduct material or quantities of byproduct material that do not require device evaluation to persons exempt from the licensing requirements of Part 30 of this chapter. This category does not include specific licenses authorizing redistribution of items that have been authorized for distribution to persons exempt from the licensing requirements of Part 30 of this chapter:	
Application	$3,200.

SCHEDULE OF MATERIALS FEES—Continued

[See footnotes at end of table]

Category of materials licenses and type of fees [1]	Fee [2 3]
J. Licenses issued under Subpart B of Part 32 of this chapter to distribute items containing byproduct material that require sealed source and/or device review to persons generally licensed under Part 31 of this chapter. This category does not include specific licenses authorizing redistribution of items that have been authorized for distribution to persons generally licensed under Part 31 of this chapter:	
Application	$1,000.
K. Licenses issued under Subpart B of Part 32 of this chapter to distribute items containing byproduct material or quantities of byproduct material that do not require sealed source and/or device review to persons generally licensed under Part 31 of this chapter. This category does not include specific licenses authorizing redistribution of items that have been authorized for distribution to persons generally licensed under Part 31 of this chapter:	
Application	$600.
L. Licenses of broad scope for possession and use of byproduct material issued under Parts 30 and 33 of this chapter for research and development that do not authorize commercial distribution:	
Application	$5,500.
M. Other licenses for possession and use of byproduct material issued under Part 30 of this chapter for research and development that do not authorize commercial distribution:	
Application	$2,300.
N. Licenses that authorize services for other licensees, except:	
(1) Licenses that authorize only calibration and/or leak testing services are subject to the fees specified in fee Category 3P; and	
(2) Licenses that authorize waste disposal services are subject to the fees specified in fee Categories 4A, 4B, and 4C:	
Application	$2,300.
O. Licenses for possession and use of byproduct material issued under Part 34 of this chapter for industrial radiography operations:	
Application	$5,800.
P. All other specific byproduct material licenses, except those in Categories 4A through 9D:	
Application	$1,300.
4. Waste disposal and processing:	
A. Licenses specifically authorizing the receipt of waste byproduct material, source material, or special nuclear material from other persons for the purpose of contingency storage or commercial land disposal by the licensee; or licenses authorizing contingency storage of low-level radioactive waste at the site of nuclear power reactors; or licenses for receipt of waste from other persons for incineration or other treatment, packaging of resulting waste and residues, and transfer of packages to another person authorized to receive or dispose of waste material:	
Licensing and inspection	Full Cost.
B. Licenses specifically authorizing the receipt of waste byproduct material, source material, or special nuclear material from other persons for the purpose of packaging or repackaging the material. The licensee will dispose of the material by transfer to another person authorized to receive or dispose of the material:	
Application	$1,700.
C. Licenses specifically authorizing the receipt of prepackaged waste byproduct material, source material, or special nuclear material from other persons. The licensee will dispose of the material by transfer to another person authorized to receive or dispose of the material:	
Application	$2,500.
5. Well logging:	
A. Licenses for possession and use of byproduct material, source material, and/or special nuclear material for well logging, well surveys, and tracer studies other than field flooding tracer studies:	
Application	$6,000.
B. Licenses for possession and use of byproduct material for field flooding tracer studies:	
Licensing	Full Cost.
6. Nuclear laundries:	
A. Licenses for commercial collection and laundry of items contaminated with byproduct material, source material, or special nuclear material:	
Application	$11,200.
7. Medical licenses:	
A. Licenses issued under Parts 30, 35, 40, and 70 of this chapter for human use of byproduct material, source material, or special nuclear material in sealed sources contained in teletherapy devices:	
Application	$6,100.
B. Licenses of broad scope issued to medical institutions or two or more physicians under Parts 30, 33, 35, 40, and 70 of this chapter authorizing research and development, including human use of byproduct material, except licenses for byproduct material, source material, or special nuclear material in sealed sources contained in teletherapy devices:	
Application	$4,400.
C. Other licenses issued under Parts 30, 35, 40, and 70 of this chapter for human use of byproduct material, source material, and/or special nuclear material, except licenses for byproduct material, source material, or special nuclear material in sealed sources contained in teletherapy devices:	
Application	$2,400.
8. Civil defense:	
A. Licenses for possession and use of byproduct material, source material, or special nuclear material for civil defense activities:	
Application	$320.
9. Device, product, or sealed source safety evaluation:	
A. Safety evaluation of devices or products containing byproduct material, source material, or special nuclear material, except reactor fuel devices, for commercial distribution:	
Application—each device	$5,200.

SCHEDULE OF MATERIALS FEES—Continued

[See footnotes at end of table]

Category of materials licenses and type of fees [1]	Fee [2 3]
B. Safety evaluation of devices or products containing byproduct material, source material, or special nuclear material manufactured in accordance with the unique specifications of, and for use by, a single applicant, except reactor fuel devices:	
Application—each device	$3,700.
C. Safety evaluation of sealed sources containing byproduct material, source material, or special nuclear material, except reactor fuel, for commercial distribution:	
Application—each source	$1,580.
D. Safety evaluation of sealed sources containing byproduct material, source material, or special nuclear material, manufactured in accordance with the unique specifications of, and for use by, a single applicant, except reactor fuel:	
Application—each source	$530.
10. Transportation of radioactive material:	
A. Evaluation of casks, packages, and shipping containers:	
Licensing and inspections	Full Cost.
B. Evaluation of 10 CFR part 71 quality assurance programs:	
Application	$390.
Inspections	Full Cost.
11. Review of standardized spent fuel facilities:	
Licensing and inspection	Full Cost.
12. Special projects: [5]	
Approvals and preapplication/Licensing activities	Full Cost.
Inspections	Full Cost.
13. A. Spent fuel storage cask Certificate of Compliance:	
Licensing	Full Cost.
B. Inspections related to spent fuel storage cask Certificate of Compliance	Full Cost.
C. Inspections related to storage of spent fuel under § 72.210 of this chapter	Full Cost.
14. Byproduct, source, or special nuclear material licenses and other approvals authorizing decommissioning, decontamination, reclamation, or site restoration activities under Parts 30, 40, 70, 72, and 76 of this chapter:	
Licensing and inspection	Full Cost.
15. Import and Export licenses:	
Licenses issued under 10 CFR part 110 of this chapter for the import and export only of special nuclear material, source material, tritium and other byproduct material, heavy water, or nuclear grade graphite:	
A. Application for export or import of high enriched uranium and other materials, including radioactive waste, which must be reviewed by the Commissioners and the Executive Branch, for example, those actions under 10 CFR 110.40(b). This category includes application for export or import of radioactive wastes in multiple forms from multiple generators or brokers in the exporting country and/or going to multiple treatment, storage or disposal facilities in one or more receiving countries:	
Application—new license	$9,100.
Amendment	$9,100.
B. Application for export or import of special nuclear material, source material, tritium and other byproduct material, heavy water, or nuclear grade graphite, including radioactive waste, requiring Executive Branch review but not Commissioner review. This category includes application for the export or import of radioactive waste involving a single form of waste from a single class of generator in the exporting country to a single treatment, storage and/or disposal facility in the receiving country:	
Application—new license	$5,600.
Amendment	$5,600.
C. Application for export of routine reloads of low enriched uranium reactor fuel and exports of source material requiring only foreign government assurances under the Atomic Energy Act:	
Application—new license	$1,700.
Amendment	$1,700.
D. Application for export or import of other materials, including radioactive waste, not requiring Commissioner review, Executive Branch review, or foreign government assurances under the Atomic Energy Act. This category includes application for export or import of radioactive waste where the NRC has previously authorized the export or import of the same form of waste to or from the same or similar parties, requiring only confirmation from the receiving facility and licensing authorities that the shipments may proceed according to previously agreed understandings and procedures:	
Application—new license	$1,100.
Amendment	$1,100.
E. Minor amendment of any export or import license to extend the expiration date, change domestic information, or make other revisions which do not require in-depth analysis, review, or consultations with other agencies or foreign governments:	
Amendment	$210.
16. Reciprocity:	
Agreement State licensees who conduct activities under the reciprocity provisions of 10 CFR 150.20:	
Application (initial filing of Form 241)	$1,200.
Revisions	$200.

[1] *Types of fees*—Separate charges, as shown in the schedule, will be assessed for preapplication consultations and reviews and applications for new licenses and approvals, issuance of new licenses and approvals, certain amendments and renewals to existing licenses and approvals, safety evaluations of sealed sources and devices, and certain inspections. The following guidelines apply to these charges:

(a) *Application fees.* Applications for new materials licenses and export and import licenses; applications to reinstate expired, terminated, or inactive licenses except those subject to fees assessed at full costs; applications filed by Agreement State licensees to register under the general license provisions of 10 CFR 150.20; and applications for amendments to materials licenses that would place the license in a higher fee category or add a new fee category must be accompanied by the prescribed application fee for each category.

(1) Applications for licenses covering more than one fee category of special nuclear material or source material must be accompanied by the prescribed application fee for the highest fee category.

(2) Applications for new licenses that cover both byproduct material and special nuclear material in sealed sources for use in gauging devices will pay the appropriate application fee for fee Category 1C only.

(b) *Licensing fees.* Fees for reviews of applications for new licenses and for renewals and amendments to existing licenses, for preapplication consultations and for reviews of other documents submitted to NRC for review, and for project manager time for fee categories subject to full cost fees (fee Categories 1A, 1B, 1E, 2A, 4A, 5B, 10A, 11, 12, 13A, and 14) are due upon notification by the Commission in accordance with § 170.12(b).

(c) *Amendment/revision fees.* Applications for amendments to export and import licenses and revisions to reciprocity initial applications must be accompanied by the prescribed amendment/revision fee for each license/revision affected. An application for an amendment to a license or approval classified in more than one fee category must be accompanied by the prescribed amendment fee for the category affected by the amendment unless the amendment is applicable to two or more fee categories in which case the amendment fee for the highest fee category would apply.

(d) *Inspection fees.* Inspections resulting from investigations conducted by the Office of Investigations and nonroutine inspections that result from third-party allegations are not subject to fees. Inspection fees are due upon notification by the Commission in accordance with § 170.12(c).

[2] Fees will not be charged for orders issued by the Commission under 10 CFR 2.202 or for amendments resulting specifically from the requirements of these types of Commission orders. However, fees will be charged for approvals issued under a specific exemption provision of the Commission's regulations under Title 10 of the Code of Federal Regulations (e.g., 10 CFR 30.11, 40.14, 70.14, 73.5, and any other sections in effect now in the future) regardless of whether the approval is in the form of a license amendment, letter of approval, safety evaluation report, or other form. In addition to the fee shown, an applicant may be assessed an additional fee for sealed source and device evaluations as shown in Categories 9A through 9D.

[3] Full cost fees will be determined based on the professional staff time multiplied by the appropriate professional hourly rate established in § 170.20 in effect at the time the service is provided, and the appropriate contractual support services expended. For applications currently on file for which review costs have reached an applicable fee ceiling established by the June 20, 1984, and July 2, 1990, rules, but are still pending completion of the review, the cost incurred after any applicable ceiling was reached through January 29, 1989, will not be billed to the applicant. Any professional staff-hours expended above those ceilings on or after January 30, 1989, will be assessed at the applicable rates established by § 170.20, as appropriate, except for topical reports whose costs exceed $50,000. Costs which exceed $50,000 for each topical report, amendment, revision, or supplement to a topical report completed or under review from January 30, 1989, through August 8, 1991, will not be billed to the applicant. Any professional hours expended on or after August 9, 1991, will be assessed at the applicable rate established in § 170.20.

[4] Licensees paying fees under Categories 1A, 1B, and 1E are not subject to fees under Categories 1C and 1D for sealed sources authorized in the same license except for an application that deals only with the sealed sources authorized by the license.

[5] Fees will not be assessed for requests/reports submitted to the NRC:

(a) In response to a Generic Letter or NRC Bulletin that does not result in an amendment to the license, does not result in the review of an alternate method or reanalysis to meet the requirements of the Generic Letter, or does not involve an unreviewed safety issue;

(b) In response to an NRC request (at the Associate Office Director level or above) to resolve an identified safety, safeguards, or environmental issue, or to assist NRC in developing a rule, regulatory guide, policy statement, generic letter, or bulletin; or

(c) As a means of exchanging information between industry organizations and the NRC for the purpose of supporting generic regulatory improvements or efforts.

10. The heading of Part 171 is revised to read as follows:

PART 171—ANNUAL FEES FOR REACTOR LICENSES AND FUEL CYCLE LICENSES AND MATERIALS LICENSES, INCLUDING HOLDERS OF CERTIFICATES OF COMPLIANCE, REGISTRATIONS, AND QUALITY ASSURANCE PROGRAM APPROVALS AND GOVERNMENT AGENCIES LICENSED BY THE NRC

11. The authority citation for Part 171 continues to read as follows:

Authority: Sec. 7601, Pub. L. 99–272, 100 Stat. 146, as amended by sec. 5601, Pub. L. 100–203, 101 Stat. 1330, as amended by Sec. 3201, Pub. L. 101–239, 103 Stat. 2106 as amended by sec. 6101, Pub. L. 101–508, 104 Stat. 1388, (42 U.S.C. 2213); sec. 301, Pub. L. 92–314, 86 Stat. 222 (42 U.S.C. 2201(w)); sec. 201, 88 Stat. 1242, as amended (42 U.S.C. 5841); sec. 2903, Pub. L. 102–486, 106 Stat. 3125, (42 U.S.C. 2214 note).

12. Section 171.13 is revised to read as follows:

§ 171.13 Notice.

The annual fees applicable to any NRC licensee subject to this part and calculated in accordance with §§ 171.15 and 171.16, will be published as a notice in the **Federal Register** as soon as possible but no later than the third quarter of the fiscal year. The annual fees will become due and payable to the NRC as indicated in § 171.19. Quarterly payments of the annual fee of $100,000 or more will continue during the fiscal year and be based on the applicable annual fees as shown in §§ 171.15 and 171.16 until a notice concerning the revised amount of the fees for the fiscal year is published by the NRC. If the NRC is unable to publish a final fee rule that becomes effective during the current fiscal year, fees would be assessed based on the rates in effect for the previous fiscal year.

13. Section § 171.15 is revised to read as follows:

§ 171.15 Annual fees: Reactor licenses and spent fuel storage/reactor decommissioning.

(a) Each person licensed to operate a power, test, or research reactor; each person holding a Part 50 power reactor license that is in decommissioning or possession only status; and each person holding a Part 72 license who does not hold a Part 50 license shall pay the annual fee for each unit for each license held at any time during the Federal FY in which the fee is due. This paragraph does not apply to test and research reactors exempted under in § 171.11(a).

(b)(1) The FY 1999 annual fee for each operating power reactor would be the amount shown in Option A or Option B as presented in paragraphs (b)(1)(i) and (ii) of this section.

(i) Option A (Rebaselining without a cap): $2,769,000.

(ii) Option B (Rebaselining with a 50 percent cap): $2,775,000.

(2) The FY 1999 annual fee is comprised of a base operating power reactor annual fee, a base spent fuel storage/reactor decommissioning annual fee, and associated additional charges (surcharges). The activities comprising the spent storage/reactor decommissioning base annual fee are shown in paragraph (c)(2)(i) and (ii) of this section. The activities comprising the surcharge are shown in paragraph (d)(1) of this section. The activities comprising the base annual fee for operating power reactors are as follows:

(i) Power reactor safety and safeguards regulation except licensing and inspection activities recovered under Part 170 of this chapter and generic reactor decommissioning activities.

(ii) Research activities directly related to the regulation of power reactors except those activities specifically related to reactor decommissioning.

(iii) Generic activities required largely for NRC to regulate power reactors, e.g., updating Part 50 of this chapter, or operating the Incident Response Center. The base annual fee for operating power reactors does not include generic activities specifically related to reactor decommissioning.

(c)(1) The FY 1999 annual fee for each power reactor holding a Part 50 license that is in a decommissioning or possession only status and each independent spent fuel storage Part 72 licensee who does not hold a Part 50 license would be the amount shown in Option A or Option B as presented in paragraphs (c)(1)(i) and (ii) of this section.

(i) Option A (Rebaselining without a cap): $199,000.

(ii) Option B (Rebaselining with a 50 percent cap): $199,000.

(2) This fee is comprised of a base spent fuel storage/reactor decommissioning annual fee (this fee is also included in the operating power reactor annual fee show in paragraph (b) of this section), and an additional charge (surcharge). The activities comprising the surcharge are shown in paragraph (d)(1) of this section. The activities comprising the FY 1999 spent fuel storage/reactor decommissioning base annual fee are:

(i) Generic and other research activities directly related to reactor decommissioning and spent fuel storage; and

(ii) Other safety, environmental, and safeguards activities related to reactor decommissioning and spent fuel storage, except costs for licensing and inspection activities that are recovered under part 170 of this chapter.

(d)(1) The activities comprising the FY 1999 surcharge are as follows:

(i) Low level waste disposal generic activities;

(ii) Activities not attributable to an existing NRC licensee or class of licensees (e.g., international cooperative safety program and international safeguards activities; support for the Agreement State program, and site decommissioning management plan (SDMP) activities); and

(iii) Activities not currently subject to 10 CFR part 170 licensing and inspection fees based on existing law or Commission policy, e.g., reviews and inspections conducted of nonprofit educational institutions and licensing actions for Federal agencies, and costs that would not be collected from small entities based on Commission policy in accordance with the Regulatory Flexibility Act.

(2) The total FY 1999 surcharge allocated to operating power reactor class of licensees is $44 million, not including the amount allocated to the new fee class, spent fuel storage/reactor decommissioning. The FY 1999 operating power reactor surcharge to be assessed to each operating power reactor is $423,000. This amount is calculated by dividing the total operating power reactor surcharge ($44 million) by the number of operating power reactors (104).

(3) The FY 1999 surcharge allocated to spent fuel storage/reactor decommissioning class of licensees is $3.2 million. The FY 1999 spent fuel storage/reactor decommissioning surcharge to be added to each operating power reactor, each power reactor in decommissioning or possession only status, and to each independent spent fuel storage Part 72 licensee who does not hold a Part 50 license is $25,600. This amount is calculated by dividing the total surcharge costs allocated to this class by the total number of power reactor licensees and Part 72 licensees who do not hold a Part 50 license (125).

(e) The FY 1999 annual fees for licensees authorized to operate a nonpower (test and research) reactor licensed under Part 50 of this chapter, unless the reactor is exempted from fees under § 171.11(a), would be the amount shown under Option A or Option B below:

	Option A (rebaselining without a cap)	Option B (rebaselining with a 50 percent cap)
Research reactor	$85,900	$85,600
Test reactor	85,900	85,600

14. Section 171.16 is revised to read as follows:

§ 171.16 Annual Fees: Materials Licensees, Holders of Certificates of Compliance, Holders of Sealed Source and Device Registrations, Holders of Quality Assurance Program Approvals and Government Agencies Licensed by the NRC.

(a)(1) The provisions of this section apply to person(s) who are authorized to conduct activities under—

(i) 10 CFR part 30 for byproduct material;

(ii) 10 CFR part 40 for source material;

(iii) 10 CFR part 70 for special nuclear material;

(iv) 10 CFR part 71 for packaging and transportation of radioactive material; and

(v) 10 CFR part 76 for uranium enrichment.

(2) Each person identified in paragraph (a)(1) of this section shall pay an annual fee for each license the person holds at any time during the first six months of the Federal fiscal year (October 1 through March 31). Annual fees will be prorated for new licenses issued and for licenses for which termination is requested and activities permanently ceased during the period October 1 through March 31 of the fiscal year as provided in § 171.17 of this section. If a single license authorizes more than one activity (e.g., human use and irradiator activities), annual fees will be assessed for each fee category applicable to the license. If you hold more than one license, the total annual fee you will be assessed will be the cumulative total of the annual fees applicable to the licenses you hold.

(b) The annual fee is comprised of a base annual fee and an additional charge (surcharge). The activities comprising the surcharge are shown in paragraph (e) of this section. The activities comprising the base annual fee is the sum of the NRC budgeted costs for:

(1) Generic and other research activities directly related to the regulation of materials licenses as defined in this part; and

(2) Other safety, environmental, and safeguards activities for materials licenses, except costs for licensing and inspection activities that are recovered under Part 170 of this chapter.

(c) A licensee who is required to pay an annual fee under this section may qualify as a small entity. If a licensee qualifies as a small entity and provides the Commission with the proper certification with the annual fee payment, the licensee may pay reduced annual fees as shown below. Failure to file a small entity certification in a timely manner could result in the denial of any refund that might otherwise be due.

	Maximum annual fee per licensed category
Small Businesses Not Engaged in Manufacturing and Small Not-For-Profit Organizations (Gross Annual Receipts):	
$350,000 to $5 million	$1,800
Less than $350,000	400

	Maximum annual fee per cicensed category
Manufacturing entities that have an average of 500 employees or less:	
35 to 500 employees	1,800
Less than 35 employees	400
Small Governmental Jurisdictions (Including publicly supported educational institutions) (Population):	
20,000 to 50,000	1,800
Less than 20,000	400
Educational Institutions that are not State or Publicly Supported, and have 500 Employees or Less:	
35 to 500 employees	1,800
Less than 35 employees	400

(1) A licensee qualifies as a small entity if it meets the size standards established by the NRC (See 10 CFR 2.810).

(2) A licensee who seeks to establish status as a small entity for purpose of paying the annual fees required under this section must file a certification statement with the NRC. The licensee must file the required certification on NRC Form 526 for each license under which it is billed. The NRC will include a copy of NRC Form 526 with each annual fee invoice sent to a licensee. A licensee who seeks to qualify as a small entity must submit the completed NRC Form 526 with the reduced annual fee payment.

(3) For purposes of this section, the licensee must submit a new certification with its annual fee payment each year.

(4) The maximum annual fee a small entity is required to pay is $1,800 for each category applicable to the license(s).

(d) The FY 1999 annual fees, including the surcharge shown in paragraph (e) of this section, for materials licensees subject to fees under this section would be the amounts shown under Option A. or Option B. below:

SCHEDULE OF MATERIALS ANNUAL FEES AND FEES FOR GOVERNMENT AGENCIES LICENSED BY NRC

[See footnotes at end of table]

Category of materials licenses	Annual fees [1 2 3]	
	Option A (rebaselining without a cap)	Option B (rebaselining with a 50 percent cap)
1. Special nuclear material:		
A.(1) Licenses for possession and use of U–235 or plutonium for fuel fabrication activities:		
(a) Strategic Special Nuclear Material:		
Babcock & Wilcox SNM–42	$3,281,000	$3,288,000
Nuclear Fuel Services SNM–124	3,281,000	3,288,000
(b) Low Enriched Uranium in Dispersible Form Used for Fabrication of Power Reactor Fuel:		
Combustion Engineering (Hematite) SNM–33	1,100,000	1,103,000
General Electric Company SNM–1097	1,100,000	1,103,000
Siemens Nuclear Power SNM–1227	1,100,000	1,103,000
Westinghouse Electric Company SNM–1107	1,100,000	1,103,000
(2) All other special nuclear materials licenses not included in Category 1.A.(1) which are licensed for fuel cycle activities:		
(a) Facilities with limited operations:		
Framatome Cogema SNM–1168	432,000	433,000
(b) All Others:		
General Electric SNM–960	314,000	315,000
B. Licenses for receipt and storage of spent fuel at an independent spent fuel storage installation (ISFSI). See 10 CFR part 171.15(c).		
C. Licenses for possession and use of special nuclear material in sealed sources contained in devices used in industrial measuring systems, including x-ray fluorescence analyzers	1,200	1,200
D. All other special nuclear material licenses, except licenses authorizing special nuclear material in unsealed form in combination that would constitute a critical quantity, as defined in § 150.11 of this chapter, for which the licensee shall pay the same fees as those for Category 1.A.(2)	3,300	3,400
E. Licenses or certificates for the operation of a uranium enrichment facility	2,043,000	2,048,000
2. Source material:		
A.(1) Licenses for possession and use of source material for refining uranium mill concentrates to uranium hexafluoride	472,000	473,000
(2) Licenses for possession and use of source material in recovery operations such as milling, in-situ leaching, heap-leaching, ore buying stations, ion exchange facilities and in processing of ores containing source material for extraction of metals other than uranium or thorium, including licenses authorizing the possession of byproduct waste material (tailings) from source material recovery operations, as well as licenses authorizing the possession and maintenance of a facility in a standby mode.		
Class I facilities [4]	131,000	92,100
Class II facilities [4]	109,000	52,100
Other facilities [4]	30,400	30,500

SCHEDULE OF MATERIALS ANNUAL FEES AND FEES FOR GOVERNMENT AGENCIES LICENSED BY NRC—Continued

[See footnotes at end of table]

Category of materials licenses	Annual fees [1 2 3]	
	Option A (rebaselining without a cap)	Option B (rebaselining with a 50 percent cap)
(3) Licenses that authorize the receipt of byproduct material, as defined in Section 11e.(2) of the Atomic Energy Act, from other persons for possession and disposal, except those licenses subject to the fees in Category 2.A.(2) or Category 2.A.(4)	81,000	67,600
(4) Licenses that authorize the receipt of byproduct material, as defined in Section 11e.(2) of the Atomic Energy Act, from other persons for possession and disposal incidental to the disposal of the uranium waste tailings generated by the licensee's milling operations, except those licenses subject to the fees in Category 2.A.(2)	13,000	11,900
B. Licenses that authorize only the possession, use and/or installation of source material for shielding	600	620
C. All other source material licenses	11,700	11,700
3. Byproduct material:		
A. Licenses of broad scope for possession and use of byproduct material issued under Parts 30 and 33 of this chapter for processing or manufacturing of items containing byproduct material for commercial distribution	26,000	24,800
B. Other licenses for possession and use of byproduct material issued under Part 30 of this chapter for processing or manufacturing of items containing byproduct material for commercial distribution	6,300	6,300
C. Licenses issued under §§ 32.72, 32.73, and/or 32.74 of this chapter authorizing the processing or manufacturing and distribution or redistribution of radiopharmaceuticals, generators, reagent kits and/or sources and devices containing byproduct material. This category also includes the possession and use of source material for shielding authorized under Part 40 of this chapter when included on the same license. This category does not apply to licenses issued to nonprofit educational institutions whose processing or manufacturing is exempt under 10 CFR 171.11(a)(1). These licenses are covered by fee Category 3D	15,300	15,400
D. Licenses and approvals issued under §§ 32.72, 32.73, and/or 32.74 of this chapter authorizing distribution or redistribution of radiopharmaceuticals, generators, reagent kits and/or sources or devices not involving processing of byproduct material. This category includes licenses issued under §§ 32.72, 32.73 and 32.74 of this chapter to nonprofit educational institutions whose processing or manufacturing is exempt under 10 CFR 171.11(a)(1). This category also includes the possession and use of source material for shielding authorized under Part 40 of this chapter when included on the same license	3,800	3,800
E. Licenses for possession and use of byproduct material in sealed sources for irradiation of materials in which the source is not removed from its shield (self-shielded units)	3,400	3,400
F. Licenses for possession and use of less than 10,000 curies of byproduct material in sealed sources for irradiation of materials in which the source is exposed for irradiation purposes. This category also includes underwater irradiators for irradiation of materials in which the source is not exposed for irradiation purposes	5,700	5,700
G. Licenses for possession and use of 10,000 curies or more of byproduct material in sealed sources for irradiation of materials in which the source is exposed for irradiation purposes. This category also includes underwater irradiators for irradiation of materials in which the source is not exposed for irradiation purposes	14,800	14,800
H. Licenses issued under Subpart A of Part 32 of this chapter to distribute items containing byproduct material that require device review to persons exempt from the licensing requirements of Part 30 of this chapter, except specific licenses authorizing redistribution of items that have been authorized for distribution to persons exempt from the licensing requirements of Part 30 of this chapter	3,200	3,200
I. Licenses issued under Subpart A of Part 32 of this chapter to distribute items containing byproduct material or quantities of byproduct material that do not require device evaluation to persons exempt from the licensing requirements of Part 30 of this chapter, except for specific licenses authorizing redistribution of items that have been authorized for distribution to persons exempt from the licensing requirements of Part 30 of this chapter	4,600	4,600
J. Licenses issued under Subpart B of Part 32 of this chapter to distribute items containing byproduct material that require sealed source and/or device review to persons generally licensed under Part 31 of this chapter, except specific licenses authorizing redistribution of terms that have been authorized for distribution to persons generally licensed under Part 31 of this chapter	2,100	2,100
K. Licenses issued under Subpart B of Part 31 of this chapter to distribute items containing byproduct material or quantities of byproduct material that do not require sealed source and/or device review to persons generally licensed under Part 31 of this chapter, except specific licenses authorizing redistribution of items that have been authorized for distribution to persons generally licensed under Part 31 of this chapter	1,700	1,700
L. Licenses of broad scope for possession and use of byproduct material issued under Parts 30 and 33 of this chapter for research and development that do not authorize commercial distribution	11,200	11,200
M. Other licenses for possession and use of byproduct material issued under Part 30 of this chapter for research and development that do not authorize commercial distribution	5,000	5,000
N. Licenses that authorize services for other licensees, except:		
(1) Licenses that authorize only calibration and/or leak testing services are subject to the fees specified in fee Category 3P; and		
(2) Licenses that authorize waste disposal services are subject to the fees specified in fee Categories 4A, 4B, and 4C	5,200	5,200

SCHEDULE OF MATERIALS ANNUAL FEES AND FEES FOR GOVERNMENT AGENCIES LICENSED BY NRC—Continued

[See footnotes at end of table]

Category of materials licenses	Annual fees [1 2 3]	
	Option A (rebaselining without a cap)	Option B (rebaselining with a 50 percent cap)
O. Licenses for possession and use of byproduct material issued under Part 34 of this chapter for industrial radiography operations. This category also includes the possession and use of source material for shielding authorized under Part 40 of this chapter when authorized on the same license	14,700	14,700
P. All other specific byproduct material licenses, except those in Categories 4A through 9D	2,600	2,500
4. Waste disposal and processing:		
A. Licenses specifically authorizing the receipt of waste byproduct material, source material, or special nuclear material from other persons for the purpose of contingency storage or commercial land disposal by the licensee; or licenses authorizing contingency storage of low-level radioactive waste at the site of nuclear power reactors; or licenses for receipt of waste from other persons for incineration or other treatment, packaging of resulting waste and residues, and transfer of packages to another person authorized to receive or dispose of waste material	[5] N/A	
B. Licenses specifically authorizing the receipt of waste byproduct material, source material, or special nuclear material from other persons for the purpose of packaging or repackaging the material. The licensee will dispose of the material by transfer to another person authorized to receive or dispose of the material	11,300	11,400
C. Licenses specifically authorizing the receipt of prepackaged waste byproduct material, source material, or special nuclear material from other persons. The licensee will dispose of the material by transfer to another person authorized to receive or dispose of the material	8,400	8,400
5. Well logging:		
A. Licenses for possession and use of byproduct material, source material, and/or special nuclear material for well logging, well surveys, and tracer studies other than field flooding tracer studies	9,900	10,000
B. Licenses for possession and use of byproduct material for field flooding tracer studies	[5] N/A	
6. Nuclear laundries:		
A. Licenses for commercial collection and laundry of items contaminated with byproduct material, source material, or special nuclear material	18,900	19,000
7. Medical licenses:		
A. Licenses issued under Parts 30, 35, 40, and 70 of this chapter for human use of byproduct material, source material, or special nuclear material in sealed sources contained in teletherapy devices. This category also includes the possession and use of source material for shielding when authorized on the same license	15,300	15,300
B. Licenses of broad scope issued to medical institutions or two or more physicians under Parts 30, 33, 35, 40, and 70 of this chapter authorizing research and development, including human use of byproduct material except licenses for byproduct material, source material, or special nuclear material in sealed sources contained in teletherapy devices. This category also includes the possession and use of source material for shielding when authorized on the same license.[9]	27,800	27,800
C. Other licenses issued under Parts 30, 35, 40, and 70 of this chapter for human use of byproduct material, source material, and/or special nuclear material except licenses for byproduct material, source material, or special nuclear material in sealed sources contained in teletherapy devices. This category also includes the possession and use of source material for shielding when authorized on the same license.[9]..	5,800	5,800
8. Civil defense:		
A. Licenses for possession and use of byproduct material, source material, or special nuclear material for civil defense activities	1,200	1,200
9. Device, product, or sealed source safety evaluation:		
A. Registrations issued for the safety evaluation of devices or products containing byproduct material, source material, or special nuclear material, except reactor fuel devices, for commercial distribution	6,000	6,100
B. Registrations issued for the safety evaluation of devices or products containing byproduct material, source material, or special nuclear material manufactured in accordance with the unique specifications of, and for use by, a single applicant, except reactor fuel devices	4,300	4,300
C. Registrations issued for the safety evaluation of sealed sources containing byproduct material, source material, or special nuclear material, except reactor fuel, for commercial distribution..	1,800	1,800
D. Registrations issued for the safety evaluation of sealed sources containing byproduct material, source material, or special nuclear material, manufactured in accordance with the unique specifications of, and for use by, a single applicant, except reactor fuel	600	620
10. Transportation of radioactive material:		
A. Certificates of Compliance or other package approvals issued for design of casks, packages, and shipping containers:		
Spent Fuel, High-Level Waste, and plutonium air packages	[6] N/A	
Other Casks	[6] N/A	
B. Quality assurance program approvals issued under 10 CFR part 71:		
Users and Fabricators	66,700	66,800
Users	2,200	1,500
11. Standardized spent fuel facilities	[6] N/A	
12. Special Projects	[6] N/A	
13. A. Spent fuel storage cask Certificate of Compliance	[6] N/A	

SCHEDULE OF MATERIALS ANNUAL FEES AND FEES FOR GOVERNMENT AGENCIES LICENSED BY NRC—Continued

[See footnotes at end of table]

Category of materials licenses	Annual fees [1 2 3]	
	Option A (rebaselining without a cap)	Option B (rebaselining with a 50 percent cap)
B. General licenses for storage of spent fuel under 10 CFR 72.210	* N/A	.....
14. Byproduct, source, or special nuclear material licenses and other approvals authorizing decommissioning, decontamination, reclamation, or site restoration activities under to 10 CFR parts 30, 40, 70, 72, and 76 of this chapter	[7] N/A	.....
15. Import and Export licenses	[8] N/A	.....
16. Reciprocity	[8] N/A	.....
17. Master materials licenses of broad scope issued to Government agencies	358,000	359,000
18. Department of Energy:		
A. Certificates of Compliance	872,000	873,000
B. Uranium Mill Tailing Radiation Control Act (UMTRCA) activities	869,000	870,000

* See 10 CFR 171.15(c).

[1] Annual fees will be assessed based on whether a licensee held a valid license with the NRC authorizing possession and use of radioactive material during the fiscal year. However, the annual fee is waived for those materials licenses and holders of certificates, registrations, and approvals who either filed for termination of their licenses or approvals or filed for possession only/storage licenses prior to October 1, 1998, and permanently ceased licensed activities entirely by September 30, 1998. Annual fees for licensees who filed for termination of a license, downgrade of a license, or for a POL during the fiscal year and for new licenses issued during the fiscal year will be prorated in accordance with the provisions of § 171.17. If a person holds more than one license, certificate, registration, or approval, the annual fee(s) will be assessed for each license, certificate, registration, or approval held by that person. For licenses that authorize more than one activity on a single license (e.g., human use and irradiator activities), annual fees will be assessed for each category applicable to the license. Licensees paying annual fees under Category 1A(1) are not subject to the annual fees for Category 1C and 1D for sealed sources authorized in the license.

[2] Payment of the prescribed annual fee does not automatically renew the license, certificate, registration, or approval for which the fee is paid. Renewal applications must be filed in accordance with the requirements of Parts 30, 40, 70, 71, 72, or 76 of this chapter.

[3] Each fiscal year, fees for these materials licenses will be calculated and assessed in accordance with § 171.13 and will be published in the FEDERAL REGISTER for notice and comment.

[4] A Class I license includes mill licenses issued for the extraction of uranium from uranium ore. A Class II license includes solution mining licenses (in-situ and heap leach) issued for the extraction of uranium from uranium ores including research and development licenses. An ''other'' license includes licenses for extraction of metals, heavy metals, and rare earths.

[5] There are no existing NRC licenses in these fee categories. Once NRC issues a license for these categories, the Commission will consider establishing an annual fee for that type of license.

[6] Standardized spent fuel facilities, 10 CFR parts 71 and 72 Certificates of Compliance, and special reviews, such as topical reports, are not assessed an annual fee because the generic costs of regulating these activities are primarily attributable to the users of the designs, certificates, and topical reports.

[7] Licensees in this category are not assessed an annual fee because they are charged an annual fee in other categories while they are licensed to operate.

[8] No annual fee is charged because it is not practical to administer due to the relatively short life or temporary nature of the license.

[9] Separate annual fees will not be assessed for pacemaker licenses issued to medical institutions who also hold nuclear medicine licenses under Categories 7B or 7C.

[10] This includes Certificates of Compliance issued to DOE that are not under the Nuclear Waste Fund.

(e) The activities comprising the surcharge are as follows:

(1) LLW disposal generic activities;

(2) Activities not attributable to an existing NRC licensee or classes of licensees; e.g., international cooperative safety program and international safeguards activities; support for the Agreement State program; site decommissioning management plan (SDMP) activities; and

(3) Activities not currently assessed licensing and inspection fees under 10 CFR part 170 based on existing law or Commission policy, e.g., reviews and inspections conducted of nonprofit educational institutions and reviews for Federal agencies; activities related to decommissioning and reclamation; and costs that would not be collected from small entities based on Commission policy in accordance with the Regulatory Flexibility Act.

15. Section 171.19 is revised to read as follows:

§ 171.19 Payment.

(a) Method of payment. Annual fee payments, made payable to the U.S. Nuclear Regulatory Commission, are to be made in U.S. funds by electronic funds transfer such as ACH (Automated Clearing House) using EDI (Electronic Data Interchange), check, draft, money order, or credit card. Federal agencies may also make payment by the On-line Payment and Collection System (OPAC's). Where specific payment instructions are provided on the invoices to applicants and licensees, payment should be made accordingly, e.g. invoices of $5,000 or more should be paid via ACH through NRC's Lockbox Bank at the address indicated on the invoice. Credit card payments should be made up to the limit established by the credit card bank, in accordance with specific instructions provided with the invoices, to the Lockbox Bank designated for credit card payments. In accordance with Department of the Treasury requirements, refunds will only be made upon receipt of information on the payee's financial institution and bank accounts.

(b) Annual fees in the amount of $100,000 or more and described in the **Federal Register** notice issued under § 171.13 must be paid in quarterly installments of 25 percent as billed by the NRC. The quarters begin on October 1, January 1, April 1, and July 1 of each fiscal year. The NRC will adjust the fourth quarterly invoice to recover the full amount of the revised annual fee. If the amounts collected in the first three quarters exceed the amount of the revised annual fee, the overpayment will be refunded. Licensees whose annual fee for FY 1998 was less than $100,000 (billed on the anniversary date of the license), and whose revised annual fee for FY 1999 would be $100,000 (subject to quarterly billing), would be issued a bill upon publication

of the final rule for the full amount of the FY 1999 annual fee, less any payments received for FY 1999 based on the anniversary date billing process.

(c) Annual fees that are less than $100,000 are billed on the anniversary date of the license. For annual fee purposes, the anniversary date of the license is considered to be the first day of the month in which the original license was issued by the NRC. Licensees that are billed on the license anniversary date will be assessed the annual fee in effect on the anniversary date of the license. Materials licenses subject to the annual fee that are terminated during the fiscal year but prior to the anniversary month of the license will be billed upon termination for the fee in effect at the time of the billing. New materials licenses subject to the annual fee will be billed in the month the license is issued or in the next available monthly billing for the fee in effect on the anniversary date of the license. Thereafter, annual fees for new licenses will be assessed in the anniversary month of the license.

(d) Annual fees of less than $100,000 must be paid as billed by the NRC. Materials license annual fees that are less than $100,000 are billed on the anniversary date of the license. The materials licensees that are billed on the anniversary date of the license are those covered by fee categories 1C, 1.D, 2(A)(2) other, 2A(3), 2A(4), 2B, 2C, 3A through 3P, 4B through 9D, 10A, and 10B.

(e) Payment is due on the invoice date and interest accrues from the date of the invoice. However, interest will be waived if payment is received within 30 days from the invoice date.

Dated at Rockville, Maryland, this 25th day of March, 1999.

For the Nuclear Regulatory Commission.

Peter J. Rabideau,

Acting Chief Financial Officer.

Note: This appendix will not appear in the Code of Federal Regulations.

Appendix A to this Proposed Rule—Draft Regulatory Flexibility Analysis for the Amendments to 10 CFR Part 170 (License Fees) and 10 CFR Part 171 (Annual Fees)

I. Background

The Regulatory Flexibility Act (RFA), as amended, (5 U.S.C. 601 *et seq.*) requires that agencies consider the impact of their rulemakings on small entities and, consistent with applicable statutes, consider alternatives to minimize these impacts on the businesses, organizations, and government jurisdictions to which they apply.

The NRC has established standards for determining which NRC licensees qualify as small entities (10 CFR 2.801). These size standards reflect the Small Business Administration's most common receipts-based size standards and include a size standard for business concerns that are manufacturing entities. The NRC uses the size standards to reduce the impact of annual fees on small entities by establishing a licensee's eligibility to qualify for a maximum small entity fee. The small entity fee categories in § 171.16(c) of this proposed rule are based on the NRC's size standards

The Omnibus Budget Reconciliation Act (OBRA–90), as amended, requires that the NRC recover approximately 100 percent of its budget authority, less appropriations from the Nuclear Waste Fund, by assessing license and annual fees. OBRA–90 requires that the schedule of charges established by rule should fairly and equitably allocate the total amount to recovered from NRC's licensees and be assessed under the principle that licensees who require the greatest expenditure of agency resources pay the greatest annual charges. The amount to be collected for FY 1999 is approximately $449.6 million.

Since 1991, the NRC has complied with OBRA–90 by issuing a final rule that amends its fee regulations. These final rules have established the methodology used by NRC in identifying and determining the fees to be assessed and collected in any given fiscal year.

Since FY 1996, the NRC stabilized annual fees by adjusting the annual fees only by the percentage change (plus or minus) in NRC's total budget authority. The percentage change would be adjusted based on changes in the 10 CFR part 170 fees and other adjustments as well as an adjustment for the number of licensees paying the fees. The NRC indicated that if there was a substantial change in the total NRC budget authority or the magnitude of the budget allocated to a specific class of licensees, the annual fee base would be recalculated. Because the NRC is proposing to establish a new annual fee class for FY 1999 and based on program changes that have occurred, the NRC is proposing to establish new baseline annual fees this fiscal year. This rebaselining would result in significant annual fee increases for certain classes of licensees. Therefore, the NRC is presenting for public comment two potential annual fee schedules, Option A-rebaselining without a cap, and Option B-rebaselining with a 50 percent cap. The NRC recognizes that under either option the rebaselined annual fees would result in an increase in the annual fees charged to some categories of materials licensees.

The Small Business Regulatory Enforcement Fairness Act of 1996 (SBREFA) is intended to reduce regulatory burdens imposed by Federal agencies on small businesses, nonprofit organizations, and governmental jurisdictions. SBREFA also provides Congress with the opportunity to review agency rules before they go into effect. Under this legislation, the NRC annual fee rule is considered a ''major'' rule and must be reviewed by Congress and the Comptroller General before the rule becomes effective. SBREFA also requires that an agency prepare a guide to assist small entities in complying with each rule for which final regulatory flexibility analysis is prepared. This Regulatory Flexibility Analysis and the small entity compliance guide (Attachment 1) have been prepared for the FY 1999 fee rule as required by law.

II. Impact on Small Entities

The fee rule results in substantial fees being charged to those individuals, organizations, and companies that are licensed by the NRC, including those licensed under the NRC materials program. The comments received on previous proposed fee rules and the small entity certifications received in response to previous final fee rules indicate that NRC licensees qualifying as small entities under the NRC's size standards are primarily materials licensees. Therefore, this analysis will focus on the economic impact of the annual fees on materials licensees. About 20 percent of these licensees (approximately 1,400 licensees) have requested small entity certification in the past. A 1993 NRC survey of its materials licensees indicated that about 25 percent of these licensees could qualify as small entities under the NRC's size standards.

The commenters on previous fee rulemakings consistently indicated that the following results would occur if the proposed annual fees were not modified.

1. Large firms would gain an unfair competitive advantage over small entities. Commenters noted that small and very small companies (''Mom and Pop'' operations) would find it more difficult to absorb the annual fee than a large corporation or a high-volume type of operation. In competitive markets, such as soils testing, annual fees would put small licensees at an competitive extreme disadvantage with its much larger competitors because the proposed fees would be the same for a two-person licensee and for a large firm with thousands of employees.

2. Some firms would be forced to cancel their licenses. A licensee with receipts of less than $500,000 per year stated that the proposed rule would, in effect, force it to relinquish its soil density gauge and license, thereby reducing its ability to do its work effectively. Other licensees, especially well-loggers, noted that the unmitigated cost of the rule would force small businesses to get rid of the materials license altogether. Commenters stated that the proposed rule would result in about 10 percent of the well-logging licensees terminating their licenses immediately and approximately 25 percent terminating their licenses before the next annual assessment.

3. Some companies would go out of business.

4. Some companies would have budget problems. Many medical licensees noted that, along with reduced reimbursements, the proposed increase of the existing fees and the introduction of additional fees would significantly affect their budgets. Others noted that, in view of the cuts by Medicare and other third party carriers, the fees would produce a hardship and some facilities would experience a great deal of difficulty in meeting this additional burden.

Since annual fees were first established, approximately 3,000 license, approval, and registration terminations have been requested. Although some of these

terminations were requested because the license was no longer needed or licenses or registrations could be combined, indications are that other termination requests were due to the economic impact of the fees.

The NRC continues to receive written and oral comments from small materials licensees indicating that the monetary threshold for small entities was not representative of small businesses with gross receipts in the thousands of dollars. These commenters believe that even the $1,800 maximum annual fee represents a relatively high percentage of gross annual receipts for these ''Mom and Pop'' type businesses. Therefore, even the reduced annual fee could have a significant impact on the ability of these types of businesses to continue to operate.

To alleviate the significant impact of the annual fees on a substantial number of small entities, the NRC considered the following alternatives, in accordance with the RFA, in developing each of its fee rules since 1991.

1. Base fees on some measure of the amount of radioactivity possessed by the licensee (e.g., number of sources).

2. Base fees on the frequency of use of the licensed radioactive material (e.g., volume of patients).

3. Base fees on the NRC size standards for small entities.

The NRC has reexamined its previous evaluations of these alternatives and continues to believe that establishment of a maximum fee for small entities is the most appropriate and effective option for reducing the impact of its fees on small entities.

The NRC established, and intends to continue for FY 1999, a maximum annual fee for small entities. The RFA and its implementing guidance do not provide specific guidelines on what constitutes a significant economic impact on a small entity. Therefore, the NRC has no benchmark to assist it in determining the amount or the percent of gross receipts that should be charged to a small entity. For FY 1999, the NRC will rely on the analysis previously completed that established a maximum annual fee for a small entity and the amount of costs that must be recovered from other NRC licensees as a result of establishing the maximum annual fees.

The NRC continues to believe that the 10 CFR part 170 application fees, or any adjustments to these licensing fees during the past year, do not have a significant impact on small entities.

By maintaining the maximum annual fee for small entities at $1,800, the annual fee for many small entities is reduced while at the same time materials licensees, including small entities, would pay for most of the FY 1999 costs attributable to them. The costs not recovered from small entities are allocated to other materials licensees and to power reactors. However, the amount that must be recovered from other licensees as a result of maintaining the maximum annual fee is not expected to increase significantly. Therefore, the NRC is proposing to continue, for FY 1999, the maximum annual fee (base annual fee plus surcharge) for certain small entities at $1,800 for each fee category covered by each license issued to a small entity.

While reducing the impact on many small entities, the Commission agrees that the maximum annual fee of $1,800 for small entities, when added to the Part 170 license fees, may continue to have a significant impact on materials licensees with annual gross receipts in the thousands of dollars. Therefore, as in each year since 1992, the NRC is continuing the lower-tier small entity annual fee of $400 for small entities with relatively low gross annual receipts. The lower-tier small entity fee of $400 also applies to manufacturing concerns, and educational institutions not State or publicly supported, with less than 35 employees. Therefore, even though the proposed rebaselined annual fees would increase the annual fees charged to several categories of materials licensees, licensees who qualify as small entities would not be adversely affected.

III. Summary

The NRC has determined that the 10 CFR part 171 annual fees significantly impact a substantial number of small entities. A maximum fee for small entities strikes a balance between the requirement to collect 100 percent of the NRC budget and the requirement to consider means of reducing the impact of the fee on small entities. On the basis of its regulatory flexibility analyses, the NRC concludes that a maximum annual fee of $1,800 for small entities and a lower-tier small entity annual fee of $400 for small businesses and not-for-profit organizations with gross annual receipts of less than $350,000, small governmental jurisdictions with a population of less than 20,000, small manufacturing entities that have less than 35 employees and educational institutions that are not State or publicly supported and have less than 35 employees reduces the impact on small entities. At the same time, these reduced annual fees are consistent with the objectives of OBRA–90. Thus, the fees for small entities maintain a balance between the objectives of OBRA–90 and the RFA. Therefore, the analysis and conclusions established in previous fee rules remain valid for FY 1999.

Attachment 1 to Appendix A

U.S. Nuclear Regulatory Commission, Small Entity Compliance Guide, Fiscal Year 1999

Contents

Introduction
NRC Definition of Small Entity
NRC Small Entity Fees
Instructions for Completing NRC Form

Introduction

The Small Business Regulatory Enforcement Fairness Act of 1996 (SBREFA) requires all Federal agencies to prepare a written guide for each ''major'' final rule as defined by the Act. The NRC's fee rule, published annually to comply with the Omnibus Budget Reconciliation Act of 1990 (OBRA–90) requires the NRC to collect approximately 100 percent of its budget authority each year through fees. This rule is considered a ''major'' rule under this law. This compliance guide has been prepared to assist NRC material licensees comply with the FY 1999 fee rule.

Licensees may use this guide to determine whether they qualify as a small entity under NRC regulations and are eligible to pay reduced FY 1999 annual fees assessed under 10 CFR part 171. The NRC has established two tiers of separate annual fees for those materials licensees who qualify as small entities under NRC's size standards.

Licensees who meet NRC's size standards for a small entity must complete NRC Form 526 to qualify for the reduced annual fee. This form accompanies each annual fee invoice mailed to materials licensees. The completed form, the appropriate small entity fee, and the payment copy of the invoice, should be mailed to the U.S. Nuclear Regulatory Commission, License Fee and Accounts Receivable Branch, to the address indicated on the invoice. Failure to file a small entity certification in a timely manner may result in the denial of any refund that might otherwise be due.

NRC Definition of Small Entity

The NRC has defined a small entity for purposes of compliance with its regulations (10 CFR 2.810) as follows:

1. Small business—a for-profit concern that provides a service or a concern not engaged in manufacturing with average gross receipts of $5 million or less over its last 3 completed fiscal years;

2. Manufacturing industry—a manufacturing concern with an average number of 500 or fewer employees based upon employment during each pay period for the preceding 12 calendar months;

3. Small organization—a not-for-profit organization which is independently owned and operated and has annual gross receipts of $5 million or less;

4. Small governmental jurisdiction—a government of a city, county, town, township, village, school district or special district with a population of less than 50,000;

5. Small educational institution—an educational institution supported by a qualifying small governmental jurisdiction, or one that is not state or publicly supported and has 500 or fewer employees;[2]

NRC Small Entity Fees

In 10 CFR 171.16(c), the NRC has established two tiers of small-entity fees for licensees that qualify under the NRC's size standards. Currently, these fees are as follows:

[2] An educational institution referred to in the size standards is an entity whose primary function is education, whose programs are accredited by a nationally recognized accrediting agency or association, who is legally authorized to provide a program of organized instruction or study, who provides an educational program for which it awards academic degrees, and whose educational programs are available to the public.

	Maximum annual fee per licensed category
Small Business Not Engaged in Manufacturing and Small Not-For Profit Organizations (Gross Annual Receipts):	
$350,000 to $5 million	$1,800
Less than $350,000	400
Manufacturing entities that have an average of 500 employees or less:	
35 to 500 employees	1,800
Less than 35 employees	400
Small Governmental Jurisdictions (Including publicly supported educational institutions) (Population):	
20,000 to 50,000	1,800
Less than 20,000	400
Educational Institutions that are not State or Publicly Supported, and have 500 Employees or Less:	
35 to 500 employees	1,800
Less than 35 employees	400

To pay a reduced annual fee, a licensee must use NRC Form 526, enclosed with the fee invoice, to certify that it meets NRC's size standards for a small entity. Failure to file NRC Form 526 in a timely manner may result in the denial of any refund that might otherwise be due.

Instructions for Completing NRC Form 526

1. File a separate NRC Form 526 for each annual fee invoice received.

2. Complete all items on NRC Form 526 as follows:

a. The license number and invoice number must be entered exactly as they appear on the annual fee invoice.

b. The Standard Industrial Classification (SIC) Code should be entered if it is known.

c. The licensee's name and address must be entered as they appear on the invoice. Name and/or address changes for billing purposes must be annotated on the invoice. Correcting the name and/or address on NRC Form 526 or on the invoice does not constitute a request to amend the license. Any request to amend a license is to be submitted to the respective licensing staffs in the NRC Regional or Headquarters Offices.

d. Check the appropriate size standard under which the licensee qualifies as a small entity. Check one box only. Note the following:

(1) The size standards apply to the licensee, not the individual authorized users listed in the license.

(2) Gross annual receipts as used in the size standards includes all revenue in whatever form received or accrued from whatever sources, not solely receipts from licensed activities. There are limited exceptions as set forth at 13 CFR 121.104. These are: the term receipts excludes net capital gains or losses, taxes collected for and remitted to a taxing authority if included in gross or total income, proceeds from the transactions between a concern and its domestic or foreign affiliates (if also excluded from gross or total income on a consolidated return filed with the IRS), and amounts collected for another by a travel agent, real estate agent, advertising agent, or conference management service provider.

(3) A licensee who is a subsidiary of a large entity does not qualify as a small entity.

(4) The owner of the entity, or an official empowered to act on behalf of the entity, must sign and date the small entity certification.

The NRC sends invoices to its licensees for the full annual fee, even though some entities qualify for reduced fees as a small entity. Licensees who qualify as a small entity and file NRC Form 526, which certifies eligibility for small entity fees, may pay the reduced fee, which for a full year is either $1,800 or $400 depending on the size of the entity, for each fee category shown on the invoice. Licensees granted a license during the first six months of the fiscal year and licensees who file for termination or for a possession only license and permanently cease licensed activities during the first six months of the fiscal year pay only 50 percent of the annual fee for that year. Such an invoice states the ''Amount Billed Represents 50% Proration.'' This means the amount due from a small entity is not the prorated amount shown on the invoice but rather one-half of the maximum annual fee shown on NRC Form 526 for the size standard under which the licensee qualifies, resulting in a fee of either $900 or $200 for each fee category billed instead of the full small entity annual fee of $1,800 or $400.

A new small entity form (NRC Form 526) must be filed with the NRC each fiscal year to qualify for reduced fees for that fiscal year. Because a licensee's ''size,'' or the size standards, may change from year to year, the invoice reflects the full fee and a new Form must be completed and returned for the fee to be reduced to the small entity fee. LICENSEES WILL NOT BE ISSUED A NEW INVOICE FOR THE REDUCED AMOUNT. The completed NRC Form 526, the payment of the appropriate small entity fee, and the ''Payment Copy'' of the invoice should be mailed to the U.S. Nuclear Regulatory Commission, License Fee and Accounts Receivable Branch at the address indicated on the invoice.

If you have questions about the NRC's annual fees, please call the license fee staff at 301–415–7554, e-mail the fee staff at fees@nrc.gov, or write to the U.S. Nuclear Regulatory Commission, Washington, DC 20555, Attention: Office of the Chief Financial Officer.

False certification of small entity status could result in civil sanctions being imposed by the NRC under the Program Fraud Civil Remedies Act, 31 U.S.C. 3801 *et. seq.* NRC's implementing regulations are found at 10 CFR part 13.

[FR Doc. 99–7843 Filed 3–31–99; 8:45 am]

BILLING CODE 7590–01–P

federal register

Thursday
April 1, 1999

Part III

Department of Education

Office of Elementary and Secondary Education

Department of Justice

Office of Juvenile Justice and Delinquency Prevention

Department of Health and Human Services

Substance Abuse and Mental Health Services Administration

Safe and Drug-Free Schools and Communities National Programs; Federal Activities Grants Program—Safe Schools/Healthy Students Initiative; Final Priority and Selection Criteria; Inviting Applications for New Awards for Fiscal Year 1999; Notices

DEPARTMENT OF EDUCATION

Office of Elementary and Secondary Education

DEPARTMENT OF JUSTICE

Office of Juvenile Justice and Delinquency Prevention

DEPARTMENT OF HEALTH AND HUMAN SERVICES

Substance Abuse and Mental Health Services Administration

Office of Juvenile Justice and Delinquency Prevention; Center for Mental Health Services; Safe and Drug-Free Schools and Communities National Programs; Federal Activities Grants Program—Safe Schools/Healthy Students Initiative; Notice of Final Priority and Selection Criteria

AGENCY: Department of Education.

ACTION: Notice of final priority and selection criteria for fiscal year 1999.

SUMMARY: The Secretary of Education (the Secretary), with the Secretary of Health and Human Services and the Attorney General, announces a final priority and selection criteria for fiscal year (FY) 1999. Under this priority, the Departments of Education (ED), Health and Human Services (HHS), and Justice (DOJ) will fund the implementation and enhancement of comprehensive community-wide strategies for creating safe and drug-free schools and promoting healthy childhood development.

To be funded, local comprehensive plans must address the following six elements and may address other elements as determined by the needs of the community: (1) Safe school environment; (2) youth alcohol and drug prevention, violence prevention, and early intervention; (3) school and community mental health preventive and treatment intervention programs; (4) early childhood psychosocial and emotion development services; (5) educational reform; and (6) safe school policies.

EFFECTIVE DATE: This notice takes effect April 1, 1999.

FOR FURTHER INFORMATION CONTACT: Detailed information regarding the Safe Schools/Healthy Students Initiative is available at the following sites on the World Wide Web:

http://www.ed.gov/offices/OESE/SDFS
http://www.ojjdp.ncjrs.org
http://www.usdoj.gov/cops
http://www.samhsa.gov
http://www.mentalhealth.org

Individuals who use a telecommunications devices for the deaf (TDD) may call the Federal Information Relay Service (FIRS) at 1–800–877–8339 between 8 a.m. and 8 p.m. Eastern Time, Monday through Friday.

SUPPLEMENTARY INFORMATION: More than a generation of research has provided a solid knowledge base of the complex risk processes that lead to violent outcomes for children, families, schools, and communities. Antisocial behaviors of children and adolescents at highest risk arise from the interaction of multiple environmental and individual antecedents that begin early in the child's life. They include (1) stressful family environments; (2) lack of parenting skills; (3) alienation between family and school (and other community institutions); and (4) individual characteristics of the child that may be biologically based (e.g., irritability, impulsivity), that interfere with critical early attachment and nurturing relationships and later make the child's behavior difficult to control. This results in the early onset of aggressive behaviors, an increase in behavior problems at home, and the continuation and escalation of problems with peers and teachers when the child reaches school age. Unless interrupted, antisocial behavior persists throughout the school career and on into adulthood. High risk converges in middle school and accelerates into adolescence. Risk is exacerbated by exposure to negative peer pressure and a noxious environment where few protective factors are available. This, in turn, increases the likelihood of interpersonal violence and other antisocial behavior, substance abuse and addiction, potential drug dealing, the emergence of disorders such as depression and anxiety, academic failure, risky sexual behaviors leading to increased risk for HIV and other sexually-transmitted diseases, and teen pregnancy.

The Safe Schools/Healthy Students Initiative draws on the best practices of the education, justice, social service, and mental health systems to promote a comprehensive, integrated framework for use by communities in planning, designing, and implementing programs to prevent school violence and youth alcohol and other drug use. This comprehensive framework includes: (1) Establishing school-community partnerships; (2) identifying and measuring the problem; (3) setting measurable goals and objectives; (4) identifying appropriate research-based programs and strategies; (5) implementing the programs and strategies in an integrated fashion; (6) evaluating the outcomes of the programs and strategies; and (7) revising the comprehensive plan on the basis of evaluation information.

The goal of the Safe Schools/Healthy Students Initiative is to help students develop the skills and emotional resilience necessary to promote positive mental health and engage in pro-social behavior, and, thereby prevent violent behavior and alcohol and other drug use to ensure that all students who attend the schools served by this initiative are able to learn in a safe, disciplined, and drug-free environment. Successful applicants will provide students, schools, and families within the targeted geographic area to be served a network of effective comprehensive services, supports, and activities that promote healthy development and safety.

Eligible Applicants: Local educational agencies.

The Secretary, with the Secretary of HHS and the Attorney General, will award approximately 50 grants in fiscal year 1999 to local educational agencies. To be eligible for funding applicants must:

(a) Demonstrate that they have developed a comprehensive, integrated, community-wide Safe Schools/Healthy Students Plan in partnership with, at a minimum, their local public mental health authority and law enforcement agency, students and members of their families, teachers, and juvenile justice officials, and that the plan addresses at least the following six elements:

(1) safe school environment;

(2) youth alcohol and drug prevention, violence prevention, and early intervention;

(3) school and community mental health preventive and treatment intervention services;

(4) early childhood psychosocial and emotional development services;

(5) educational reform; and

(6) safe school policies;

(b) Submit a written agreement signed by the school superintendent, the head of the local public mental health authority, and the chief law enforcement executive adopting the plan that describes (1) the goals and objectives of the partnership, and (2) a delineation of the roles and responsibilities of the partners;

(c) Submit a written agreement signed by the school superintendent and head of the local public mental health organization that describes the procedures the signatories will use for referral, treatment, and follow-up by the appropriate mental health system for children and adolescents with serious mental health problems;

(d) Provide a baseline assessment of risk factors among students and within the community, and resources and services available to students and their families, including:

(1) Risk factors among students such as the number of students engaged in alcohol and drug use and violent behavior; incidence and prevalence of alcohol and drug use by youth; weapon carrying or possessing in schools; incidents of serious and violent crime in schools; truancy and other unauthorized absences; suicidal behaviors; student suspensions and/or expulsions for drug use or violent behavior; students on probation; students in juvenile justice placements; students in foster care and child protective services; children abused and neglected; students with emotional and behavioral disorders; and data on school attendance and student academic performance.

(2) Community risk factors such as socioeconomic conditions as measured by the percentage of families at or below the poverty level and the percentage of students receiving free and reduced cost meals at schools; population turnover; racial and ethnic heterogeneity; housing density; household composition; crime and delinquency rates, including domestic violence and rape; and suicide rates.

(3) Resources and services available to students and their families such as number of after-school programs; number of youth served by programs to build social skills; number and quality of community mental health and social service organizations available to provide services to children, adolescents, and families; number of youth participating in academic readiness programs; number and types of early intervention services and programs; number and types of law enforcement prevention programs; number of substance abuse programs, and presence of a community anti-drug coalition.

(e) Agree to participate in a national evaluation of the Initiative that will collect data on student risk indicators and outcomes of the program(s) implemented across sites on an annual basis.

(f) Provide a local plan for evaluating the community-wide strategy and agree to set aside sufficient funds (not less than 5 percent of the project budget) to fund a local evaluator to assist with a range of evaluation activities.

(g) In the comprehensive plan, provide for mental health services for all students.

(h) Show that Federal regulations regarding possession of firearms and reporting of firearm offenses to appropriate law enforcement officials and regulations regarding tobacco use are being enforced.

In making awards under this grant program, the Secretary, with the Secretary of HHS and the Attorney General, may (1) take into consideration the geographic distribution and diversity of activities addressed by the projects, in addition to the rank order of applicants, and (2) in accordance with Section 75.217(d) of the Education Department General Administrative Regulations, ensure equitable distribution of grants under this program among urban, suburban, and rural LEAs.

Contingent upon the availability of funds, the Secretary, with the Secretary of HHS and the Attorney General, may make additional awards in fiscal year 2000 from the rank-ordered list of unfunded applicants from this competition.

Note: This notice of final priority and selection criteria does not solicit applications. A notice inviting applications under this competition is published in a separate notice in this issue of the **Federal Register**.

Applications for this competition must be received at the address specified in the notice inviting applications for this competition no later than 5 p.m. on June 1, 1999. Applications received after that time will not be eligible for funding. Postmarked dates will not be accepted.

Absolute Priority

Under 34 CFR 75.105(c)(3), the Safe and Drug-Free Schools and Communities Act, and the Omnibus Consolidated and Emergency Supplemental Appropriation Act of 1999, Public law 105–277, enacted October 21, 1998, the Secretary, with the Secretary of HHS and the Attorney General, gives an absolute preference to applications that meet the following priority.

Absolute Priority—Enhancing and implementing comprehensive community-wide strategies for creating safe and drug-free schools and promoting healthy childhood development.

Applicants proposing a project under this priority must demonstrate how the funds they are requesting support or enhance a comprehensive, integrated strategy for an entire school district. In circumstances where implementation of the strategy for an entire school district is not possible, applicants must provide a full explanation of how the chosen schools will receive all 6 elements of the plan, and why district-wide implementation is not feasible or appropriate.

Selection Criteria

The Secretary, with the Secretary of HHS and the Attorney General, uses the following selection criteria to evaluate applications for new grants under this competition.

The maximum total score for all of these criteria is 100 points.

The maximum score for each criterion or factor under that criterion is indicated in parentheses.

(a) *Problem(s) to be addressed (20 points).*

In assessing the extent to which the application is based on a clear and accurate statement of a significant problem faced by the target community, the following factors are considered. (Note: Applicants from Federal Empowerment Zones or Enterprise Communities will have five points added to their score under this criterion, with the total number of points awarded not to exceed 20).

(1) The magnitude or severity of the problem(s) to be addressed by the proposed strategy.

(2) The extent to which existing gaps in services and resources exist, the magnitude of those gaps and weaknesses, and the extent to which the community is ready to improve current conditions.

(3) The factual basis for the problem statement based on data including, at a minimum but not limited to, the rates of the following:

—students engaged in alcohol and drug use and violent behavior;
—incidence and prevalence of alcohol and drug use among youth;
—weapon carrying or possessing in schools;
—incidents of serious and violent crime in schools;
—truancy and other unauthorized absences;
—suicidal behaviors;
—student suspensions and expulsions;
—students on probation;
—students in juvenile justice placements;
—students in foster care and child protective services;
—children abused and neglected;
—students with emotional and behavioral disorders; and
—student attendance and academic performance data.

(4) Evidence of community risk factors including:

—socioeconomic conditions as measured by the percentage of families at or below the poverty level and percentage of students receiving free and reduced cost meals at school;

—population turnover;
—racial and ethnic heterogeneity;
—housing density;
—household composition;
—crime and delinquency rates including domestic violence and rape; and
—suicide rates.

(5) The extent to which the problem statement includes an assessment of the community resources available for children and adolescents, including:

—number of after-school programs;
—number of youth served by programs to build social skills;
—number and quality of community mental health and social service organizations available to provide services to children, adolescents, and families;
—number of youth participating in academic readiness programs;
—number and types of early intervention services and programs;
—number and types of law enforcement prevention programs;
—number and quality of substance abuse prevention programs; and
—presence of a community anti-drug coalition.

(b) *Goals and objectives (10 points).*

In assessing the goals and objectives of the proposed comprehensive plan, the following factors are considered.

(1) The extent to which the goals and objectives for the proposed strategy are clearly defined, measurable, and attainable.

(2) The extent to which the proposed strategy will meet the established goals and objectives and lead to healthy childhood development and positive mental health, and safe, disciplined, and alcohol and drug-free learning environments.

(3) The extent to which the objectives identified are related to measurable action steps needed to achieve the goal(s).

(c) *Design of Proposed Strategy (30 points).*

In assessing the design of the proposed strategy, the following factors are considered. (Note: Ten of the 30 points available for this criterion will be awarded for item 9, extent to which activities/interventions are evidence-based, for those strategies that propose activities under program elements 2,3, and/or 4 of the comprehensive plan.)

(1) The extent to which the proposed strategy represents a comprehensive network in which each element of the Safe Schools/Healthy Students Initiative is addressed and incorporated in an integrated fashion;

(2) The extent to which the intervention is appropriate for the age and developmental levels, gender, and ethnic and cultural diversity of the target population;

(3) The extent to which the application clearly describes the programs, activities, and services that comprise the proposed strategy;

(4) The extent to which the application demonstrates a linkage between program activities and objectives of the strategy;

(5) The adequacy of the identified performance measures to demonstrate whether and to what extent the proposed strategy is meeting its short-term, intermediate, and long-term objectives;

(6) The extent to which the proposed strategy will be coordinated with similar or related efforts and will establish linkages with other appropriate agencies and organizations providing services to the target population including community, State, and Federal resources.

(7) Adequacy and appropriateness of the plan to collect data related to violence from a variety of sources such as mental health services, social services, schools, law enforcement agencies, and the juvenile justice system.

(8) The potential for continued support of the strategy after Federal funding ends, including, as appropriate, the demonstrated commitment of appropriate entities to such support.

(9) The extent to which the activities/interventions proposed under program elements 2, 3, and/or 4 of the comprehensive plan are evidence-based; that is, they have a solid base of research evidence demonstrating effectiveness. (10 points)

(10) The extent to which the program is adequately documented so that both the process and positive outcome can be easily replicated.

(11) The extent to which the program selected is designed to help meet the goals and objectives of the community's comprehensive plan.

(d) (*Evaluation Plan (10 points)*

In determining the quality of the evaluation plan, the following factors will be considered:

(1) The extent to which the plan provides information for increasing the effectiveness of management and administration of the comprehensive plan, documents that objectives have been met, and determines the overall effectiveness of the plan, its programs, and strategies.

(2) The extent to which the methods of evaluation are thorough, feasible, and appropriate to the goals, objectives, and outcomes of the proposed strategy.

(3) The extent to which the methods of evaluation will provide timely guidance for quality assurance.

(e) *Management and Organizational Capability (20 points).*

In determining the quality of management and organizational capability, the following factors are considered:

(1) The level of commitment proposed by the written agreements signed by the school superintendent, the head of the local public mental health authority, and the chief law enforcement executive, as well as written agreements with other community partners.

(2) The relevance and demonstrated commitment of each partner in the proposed strategy to the implementation and success of the strategy.

(3) The adequacy of the management plan to achieve the objectives of the proposed project on time and within budget, including clearly defined responsibilities, timelines, and milestones for accomplishing project tasks.

(4) The adequacy of procedures for communicating and sharing information among all partners to ensure feedback and continuous improvement in the operation of the strategy.

(5) The skills, experience, time commitments, and educational requirements of key staff and relevance of the objectives of the proposed strategy.

(6) The extent to which staff and the training of those staff reflect the needs of the population to be served.

(f) *Budget (10 points).*

In determining the quality of the budget, the following factors will be considered:

(1) The extent to which the costs are reasonable in relation to the number of students to be served and to the anticipated benefits and results; and

(2) The extent to which fiscal control and accounting procedures will ensure prudent use, proper and timely disbursement and accurate accounting of funds received under the grant.

Waiver of Proposed Rulemaking

It is the Secretary's practice, in accordance with the Administrative Procedure Act (5 U.S.C. 553), to offer interested parties the opportunity to comment on proposed rules. Section 437(d)(1) of the General Education Provisions Act (GEPA), however, exempts from this requirement rules that apply to the first competition under a new or substantially revised program. Funding was provided for this new initiative in the fiscal year 1999 appropriations act enacted October 21, 1998. The Secretary, in accordance with

section 437(d)(1) of GEPA, has decided to forego public comment in order to ensure timely grant awards.

Intergovernmental Review

This program is subject to the requirements of Executive Order 12372 (Intergovernmental Review of Federal Programs) and the regulations in 34 CFR Part 79. The objective of the Executive order is to foster an intergovernmental partnership and to strengthen federalism by relying on processes developed by State and local governments for coordination and review of proposed Federal financial assistance.

In accordance with the order, this document is intended to provide early notification of the Federal Departments' specific plans and actions for this program.

Electronic Access to This Document

Anyone may view this document on the World Wide Web at the following sites:

http://ocfo.ed/gov/fedreg.htm

http://www.ed.gov/OESE/SDFS

http://www.ojjdp.ncjrs.org

http://www.usdoj.gov/cops

http://www.samhsa.gov

http://www.mentalhealth.org

Note: The official version of this document is the document published in the **Federal Register**.

Dated: March 25, 1999.

Judith Johnson,

Acting Assistant Secretary, Office of Elementary and Secondary Education.

Shay Bilchik,

Administrator, Office of Juvenile Justice and Delinquency Prevention.

Joseph Brann,

Director, Office of Community Oriented Policing Services.

Nelba Chavez,

Administrator, Substance Abuse and Mental Health Services Administration.

(Catalog of Federal Domestic Assistance Number 84.184L, Safe and Drug-Free Schools and Communities Act National Programs—Federal Activities Grants Program.)

[FR Doc. 99–7943 Filed 3–31–99; 8:45 am]

BILLING CODE 4000–01–U

DEPARTMENT OF EDUCATION

Office of Elementary and Secondary Education

DEPARTMENT OF JUSTICE

Office of Juvenile Justice and Delinquency Prevention

DEPARTMENT OF HEALTH AND HUMAN SERVICES

Substance Abuse and Mental Health Services Administration

Office of Juvenile Justice and Delinquency Prevention; Center for Mental Health Services; Safe and Drug-Free Schools and Communities National Programs; Federal Activities Grant Program—Safe School/Healthy Students Initiative; Notice Inviting Applications for New Awards for Fiscal Year 1999

Purpose of Program: To fund the implementation and enhancement of comprehensive community-wide strategies for creating safe and drug-free schools and promoting healthy childhood development.

Eligible Applicants: Local educational agencies.

Applications Available: April 1, 1999.

Deadline for Receipt of Applications: June 1, 1999.

Note: All applications must be received by 5 p.m. Eastern Time on or before the deadline date. Applications received after that time will not be eligible for funding. Postmarked dates will not be accepted. Applications by mail should be sent to: OJJDP, c/o Juvenile Justice Resource Center, 2277 Research Blvd, Mail Stop 2K, Rockville, MD 20850; (301) 519–5535.

Deadline for Intergovernmental Review: July 31, 1999.

Available Funds: $180,000,000.

Estimated Average Size of Awards: Up to $3 million for LEAs in urban areas; up to $2 million for LEAs in suburban areas; up to $1 million for LEAs in rural area or tribal schools.

Estimated Number of Awards: 50.

Note: The Departments of Education, Justice, and Health and Human Services are not bound by any estimates in this notice.

Project Period: Up to 36 months.

Applicable Regulations:

(a) The Education Department General Administrative Regulations (EDGAR) in 34 CFR parts 74, 75, 77, 79, 80, 81, 82, 85, 98, and 99; and

(b) The Notice of final priority and selection criteria for FY 1999 published elsewhere in this issue of the **Federal Register**.

For Applications or Information Contact:

Electronic access to this document and the application package is available at:

http://ocfo.ed.gov/fedreg.htm
http://www.ed.gov/offices/OESE/SDFS
http://www.ojjdp.ncjrs.org
http://www.usdoj.gov/cops
http://www/samhsa.gov
http:/www.mentalhealth.org

To request a copy of the application package by mail, call 800–638–8736, select Option 2 and ask for SL 336, Safe Schools/Healthy Students Initiative Application Package. To request the application via Fax-on-Demand (available 24 hours a day, seven days a week), call 800–638–8736, select Option 1, select Option 2, and follow instructions to enter the following 4 digit numbers:

9081, Safe Schools/Healthy Students Instructions and Checklist;

9082, Safe Schools/Healthy Students Program Announcement and Appendices.

Individuals who use a telecommunications device for the deaf (TDD) may call the Federal Information Relay Service (FIRS) at 1–800–877–8339 between 8 a.m. and 8 p.m., Eastern time, Monday through Friday.

Individuals with disabilities may obtain this document in an alternative formation (e.g. Braille, large print, audio tape, or computer diskette) upon request to the contact listed above. However, the Departments of Education, Justice, and Health and Human Services are not able to reproduce in an alternative format the standard forms included in the application package.

Note: The official version of this document is the document published in the **Federal Register**. Program Authority: 20 U.S.C. 7131 and the Omnibus Consolidated and Emergency Supplemental Appropriation Act of 1999, Public Law 105–277, enacted October 21, 1998.

Dated: March 25, 1999.

Judith Johnson,

Acting Assistant Secretary, Office of Elementary and Secondary Education.

Shay Bilchik,

Administrator, Office of Juvenile Justice and Delinquency Prevention.

Joseph Brann,

Director, Office of Community Oriented Policing Services.

Nelba Chavez,

Administrator, Substance Abuse and Mental Health Services Administration.

(Catalogue of Federal Domestic Assistance Number 84.184L, Safe and Drug-Free Schools and Communities Act National Programs—Federal Activities Grants Program.)

[FR Doc. 99–7944 Filed 3–31–99; 8:45 am]

BILLING CODE 4000–01–U

federal register

Thursday
April 1, 1999

Part IV

Department of Transportation

Federal Aviation Administration

14 CFR Part 91

Pilot Responsibility for Compliance With Air Traffic Control Clearances and Instructions; Rule

DEPARTMENT OF TRANSPORTATION

Federal Aviation Administration

14 CFR Part 91

Pilot Responsibility for Compliance With Air Traffic Control Clearances and Instructions

AGENCY: Federal Aviation Administration (FAA), DOT.

ACTION: Interpretive rule.

SUMMARY: Pilots operating in areas in which air traffic control is exercised are required by regulation to comply with the clearances and instructions of air traffic controllers except in very narrow circumstances. The FAA has consistently construed and enforced this requirement as ascribing to pilots a high level of responsibility to monitor air traffic control communications attentively. Under normal circumstances, the FAA has expected pilots to understand and to comply with clearly transmitted and reasonably phrased clearances and instructions that govern their operations. Nevertheless, a series of recent National Transportation Safety Board (NTSB) enforcement decisions has raised a question regarding the regulatory responsibility of pilots to hear and to comply with air traffic control clearances and instructions. This interpretive rule confirms the FAA's historical construction of its regulations that require compliance with air traffic control clearances and instructions.

EFFECTIVE DATE: This document is effective March 26, 1999.

FOR FURTHER INFORMATION CONTACT: Eric Harrell, Air Traffic Operations Program, ATO–100, Federal Aviation Administration, 800 Independence Avenue, SW, Washington, DC 20591, (202) 267–9155 or James Tegtmeier, Office of the Chief Counsel, AGC–300, Federal Aviation Administration, 800 Independence Avenue, SW, Washington, DC 20591, (202) 267–3137.

SUPPLEMENTARY INFORMATION:

History

The FAA's general operating and flight rules require pilots to comply with the clearances and instructions of air traffic control, unless they are amended, except in an emergency or in response to a traffic alert and collision avoidance system resolution advisory. Although a number of aviation regulations are based on this requirement, the general responsibility of pilots to comply with air traffic control clearances and instructions is presently located at 14 CFR 91.123 (a) and (b). Aviation regulations according the same responsibility as section 91.123 have existed in similar terms for many decades.

As a practical matter, air traffic control communications rely heavily on accurate verbal radio communication. As a result, the FAA has long considered that aviation safety requires air traffic control to function as a cooperative system, in which all participants must share the responsibility for accurate communication. In the FAA's view, the duty of pilots and air traffic controllers alike is adherence to a high standard in communicating clearly, listening attentively, and understanding reasonably.

Bearing in mind these shared responsibilities, when a miscommunication or misunderstanding occurs, the FAA deems responsible the participant who is the initiating or principal cause of the error. For example, the use of unclear terminology, a failure to hear accurately, or a failure to understand a clear transmission can be the initiating or principal cause of a miscommunication. An example in which an air traffic controller's role excuses the pilot might arise from the controller's issuance of an ambiguous clearance or use of misleading terminology that reasonably causes the pilot's misunderstanding. An example in which neither air traffic control nor the pilot is to blame for a miscommunication might exist when the aircraft's radio fails.

With respect to the level of attention and comprehension expected of pilots, an interpretation of a regulatory predecessor to 14 CFR 91.123 was published with the regulation from 1955 through 1962.[1] This interpretation reflects an expectation that pilots will pay particular attention to the transmissions of air traffic control, because air traffic controllers frequently must issue clearances that differ from those that pilots anticipate.

> It is important that pilots pay particular attention to the air traffic clearance and not assume that the route and altitude are the same as requested in the flight plan. It is suggested that pilots make a written record of clearances at the time they are received [] and verify the clearance with Air Traffic Control if any doubt exists.

This interpretative language captures the general responsibility of pilots to remain attentive to the content of air traffic control transmissions, as well as the duty of pilots to resolve any confusion they perceive by contacting air traffic control. The FAA's codification of the latter aspect of these responsibilities currently appears in 14 CFR 91.123(a), which requires pilots to request clarification in the event that they are uncertain about an air traffic control clearance or instruction.

With respect to the more general duty of pilots to remain attentive to and to comprehend air traffic control transmissions, the FAA considers responsibility to hinge on the circumstances. It is air traffic control's practice not to presume that a pilot has received a clearance or instruction unless the pilot first acknowledges receipt of the radio transmission. When a clearance or instruction is issued and acknowledged but the pilot nevertheless fails to comply with the transmission, the FAA construes its regulations to indicate pilot responsibility where neither air traffic control involvement nor a mechanical problem causes the pilot's lapse. Thus, when air traffic control transmits a clearance or instruction that is properly acknowledged and there is no evidence of radio malfunction or similar interference with receipt, the FAA presumes that the radio transmission is received in the aircraft cockpit. Based on the pilot's duty to listen attentively to air traffic control transmissions and to construe them reasonably, if a clearance or instruction is reasonably phrased and received in the cockpit, the pilot's failure to hear or to understand it is the result of the pilot's negligence.

In reviewing the FAA's enforcement of FAA regulations, the NTSB has historically agreed with the FAA's construction of the air traffic control regulations. In *Administrator* v. *Wolfenbarger*, for example, an NTSB administrative law judge dismissed the FAA's allegation that a pilot did not comply with an air traffic control instruction to stop his aircraft short of the active runway. Noting that the pilot's radios were working and that air traffic control's radio transmissions were being broadcast, the NTSB granted the FAA's appeal.

> Whether radio frequencies are mis-selected, whether a pilot does not hear because his attention is elsewhere, or whether he hears a transmission but chooses to ignore it, is irrelevant. * * * As the Administrator points out * * *, the law judge's construction (that a pilot might excusably miss an air traffic control transmission without reason] would lead to avoidance of all [air traffic control]) instruction violations simply by claiming that they were not received. Not only is this

[1] 20 FR 2512, 2523 & n.3 (1955) (promulgating 14 CFR 60.21–1); *see, e.g.,* 14 CFR 60.21–1 n.3 (1962).

a strained reading, but it is inconsistent with our prior interpretation of the rule.[2] Similarly, in *Administrator* v. *Nelson*, the NTSB agreed that the text of an air traffic control clearance supported the conclusion that the pilot did not exercise the high level of care and attention expected of him when he mistakenly took a clearance, because it was directed to another aircraft. Although a portion of the clearance may have been blocked and therefore not received by the pilot, the NTSB found that the pilot should not have construed the clearance to be directed to his aircraft.[3]

Related to the responsibilities of pilots and air traffic controllers in conducting radio communications, the NTSB has added to a pilot's full and complete readback—or verbal repetition—of an air traffic control clearance or instruction offers a level of redundancy that reduces the risk of miscommunication.[4] At the same time, the NTSB acknowledged that FAA regulations do not require pilots to give a full and complete readback. The NTSB observed that there is concern that full readbacks can lead to the congestion of radio frequencies and in some instances disserve air safety.[5]

Nevertheless, when pilots incorrectly repeat air traffic control transmissions, the NTSB's apparent preference for full readbacks has led to two inconsistent lines of case law. The first line of NTSB reasoning generally accords with the FAA's interpretation of FAA regulations. In these cases, the NTSB concludes that an air traffic controller's failure to identify and to correct a pilot's erroneous readback contributes to the pilot's error and warrants a mitigation of the sanction for the pilot's regulatory violation.[6]

A second line of NTSB decisions, which diverges from the FAA's longstanding construction of FAA regulations, suggests that providing a readback will excuse the pilot even if the pilot is the initiating or principal cause of a miscommunication. In *administrator* v. *Frohmuth*, the NTSB appeared to base its decision on a finding the air traffic controller initiated and then supported the two pilots' misunderstanding.[7] In language not directly required for its legal conclusion, the NTSB added that the pilots' full readback placed responsibility to correct the error on air traffic control.[8] Regardless, the NTSB acknowledged the importance of pilots' careful attention to air traffic control transmissions and specified that pilots will, as a general rule, be held responsible for their mistakes.[9]

Despite the limiting language in *Frohmuth*, the NTSB recast the decision the following year in *Administrator* v. *Atkins*, developing a line of reasoning that does not hold pilots responsible for the errors that they initiate.

> (In *Frohmuth*), we clarified [our] precedent by explaining that even if a deviation from a clearance is initiated by an inadvertent mistake on the pilot's part, that mistake will be excused and no violation will be found if, after the mistake, the pilot takes actions that, but for [air traffic control], would have exposed the error and allowed for it to be corrected.[10]

The NTSB expanded this reasoning to excuse pilots based on certain partial readbacks in its decision in *Administrator* v *Rolund*.[11] In *Rolund*, the NTSB accepted that a pilot, without explanation, did not hear the altitude portion of his clearance, although he correctly read back another portion of the clearance.[12] The NTSB excused the pilot from responsibility despite his failure to provide a full and complete readback, concluding that the air traffic controller should have questioned the pilot about the part of the clearance that the pilot failed to read back.[13]

More recently, in *Administrator* v *Merrell*, the NTSB excused a miscommunication for which the pilot was the initiating or principal cause due to an unexplained ''error of perception,'' resulting in the pilot's acceptance of a clearance for another aircraft and a loss of separation between two commercial flights.[14] The NTSB agreed that the pilot's unexplained error caused the miscommunication and also seemingly agreed that there was no prior or subsequent air traffic control contribution to the pilot's error.[15] The NTSB excused the pilot's error based on his readback, although the pilot's readback was blocked by another radio transmissions and could not have been received and corrected by air traffic control.[16]

The NTSB's line of reasoning originating in *Frohmuth* and presently culminating in *Merrell*, in effect, substitutes a duty to provide a full or, in some cases, a partial readback for a pilot's duty to listen carefully to and understand reasonably the air traffic control transmissions received in his or her aircraft. The NTSB's interpretation does not correspond to the FAA's construction of FAA regulations and requires correction.

Interpretation

The NTSB's *Frohmuth*-based line of decisions deviates from an accurate construction of the FAA's regulations governing air traffic control communications. These FAA regulations require pilots to comply with air traffic control clearances and instructions. Contrary to the NTSB's reasoning, pilots do not meet this regulatory imperative by offering a full and complete readback or by taking other action that would tend to expose their error and allow for it to be corrected. Readbacks are a redundancy in that they supply a check on the exchange of information transmitted through the actual clearance or instruction. Full and complete readbacks can benefit safety when the overall volume of radio communications is relatively light; however, they can be detrimental during periods of concentrated communications.

Giving a full readback of an air traffic control transmission could result in the mitigation of sanction for a regulatory violation when the air traffic controller, under the circumstances, reasonably should correct the pilot's error but fails to do so. Accordingly, the FAA may take this factor into consideration in setting the amount of sanction in FAA enforcement orders. However, the simple act of giving a readback does not shift full responsibility to air traffic control and cannot insulate pilots from their primary responsibility under 14 CFR 91.123 and related regulations to listen attentively, to hear accurately, and to construe reasonably in the first instance.

---

[2] *Wolfenbarger*, No. EA–3684, 1992 WL 289055, at *3 (N.T.S.B. Oct. 8, 1992) (citation omitted).

[3] *Nelson*, 2 N.T.S.B. at 1900, 1902 (1975).

[4] *See, e.g.*, *Administrator* v. *Hinkle*, 5 N.T.S.B. 2423, 2425–26 (1987).

[5] *Hinkle*, 2 N.T.S.B. at 2426.

[6] *See Administrator* v. *Swafford*, No. EA–4117, 1994 WL 108069, at *2–3 (N.T.S.B. Mar. 31, 1994) (reversing the administrative law judge's initial decision dismissing the FAA's complaint, reinstating two pilots' regulatory violations, and reducing the sanction for the violations).

[7] No. EA–3816, 1993 WL 75479, at *2 (N.T.S.B. Mar. 18, 1993).

[8] *Frohmuth*, No. EA–3816, 1993 WL 75479, at *2–3.

[9] *Frohmuth*, No. EA–3816, 1993 WL 75479, at *2.

[10] *Atkins*, No. EA–4078, 1994 WL 49589, at *2 (N.T.S.B. Feb. 16, 1994).

[11] No. EA–4123, 1994 WL 132539, (N.T.S.B. Apr. 8, 1994) (order denying reconsideration), *aff'd*, 57 F.3d 1144 (D.C. Cir. 1995).

[12] *Rolund*, No. EA–4123, 1994 WL 132539, at *2.

[13] *Rolund*, No. EA–4123, 1994 WL 132539, at *2.

[14] No. EA–4530, 1997 WL 335741, at *2 (N.T.S.B. Mar. 12, 1997), *recon. denied*, No. EA–4670, 1998 WL 309790 (N.T.S.B. June 11, 1998), *petition for review docketed*, No. 98–1365 (D.C. Cir. Aug. 7, 1998).

[15] *Merrell*, No. EA–4530, 1997 WL 335741, at *2; *Merrell*, No. EA–4670, 1998 WL 309790, at *1 & 3 n.4.

[16] *Merrell*, No. EA–4530, 1997 WL 335741, at *1, 2; *Merrell*, No. EA–4670, 1998 WL 309790, at *1 & 3 n.4.

Economic Considerations

This interpretation is not a change to the subject regulation that must undergo the economic analyses prescribed in Executive Order 12866 or the Regulatory Flexibility Act of 1980. It is not ''a significant regulatory action'' as defined in the Executive Order or the Department of Transportation Regulatory Policies and Procedures. This interpretive rule will not have a significant impact on a substantial number of small entities and will not constitute a barrier to international trade. Because this interpertive rule merely provides the correct interpretation of a regulation as the FAA has enforced it, it does not impose a separate economic impact, and no further economic evaluation is warranted.

Issued in Washington, DC, on March 26, 1999.

Jane F. Garvey,

Administrator.

[FR Doc. 99–8081 Filed 3–31–99; 8:45 am]

BILLING CODE 4910–13–M

Reader Aids

Federal Register

Vol. 64, No. 62

Thursday, April 1, 1999

CUSTOMER SERVICE AND INFORMATION

Federal Register/Code of Federal Regulations	
General Information, indexes and other finding aids	**202–523–5227**
Laws	**523–5227**
Presidential Documents	
Executive orders and proclamations	**523–5227**
The United States Government Manual	**523–5227**
Other Services	
Electronic and on-line services (voice)	**523–4534**
Privacy Act Compilation	**523–3187**
Public Laws Update Service (numbers, dates, etc.)	**523–6641**
TTY for the deaf-and-hard-of-hearing	**523–5229**

ELECTRONIC RESEARCH

World Wide Web

Full text of the daily Federal Register, CFR and other publications:

http://www.access.gpo.gov/nara

Federal Register information and research tools, including Public Inspection List, indexes, and links to GPO Access:

http://www.nara.gov/fedreg

E-mail

PENS (Public Law Electronic Notification Service) is an E-mail service that delivers information about recently enacted Public Laws. To subscribe, send E-mail to

listproc@lucky.fed.gov

with the text message:

subscribe publaws-l <firstname> <lastname>

Use listproc@lucky.fed.gov only to subscribe or unsubscribe to PENS. We cannot respond to specific inquiries at that address.

Reference questions. Send questions and comments about the Federal Register system to:

info@fedreg.nara.gov

The Federal Register staff cannot interpret specific documents or regulations.

FEDERAL REGISTER PAGES AND DATES, APRIL

15633–15914 1

CFR PARTS AFFECTED DURING APRIL

At the end of each month, the Office of the Federal Register publishes separately a List of CFR Sections Affected (LSA), which lists parts and sections affected by documents published since the revision date of each title.

REMINDERS

The items in this list were editorially compiled as an aid to Federal Register users. Inclusion or exclusion from this list has no legal significance.

RULES GOING INTO EFFECT APRIL 1, 1999

AGENCY FOR INTERNATIONAL DEVELOPMENT

Organization, functions, and authority delegations:

Executive agency status; published 4-1-99

ARMS CONTROL AND DISARMAMENT AGENCY

Repeal of CFR regulations; published 4-1-99

COMMERCE DEPARTMENT

National Oceanic and Atmospheric Administration

Marine mammals:

Commercial fishing operations; incidental taking—

Atlantic large whale take reduction plan; published 2-16-99

EDUCATION DEPARTMENT

Postsecondary education:

Gaining Early Awareness and Readiness for Undergraduate Programs; published 3-2-99

FEDERAL DEPOSIT INSURANCE CORPORATION

Deposit insurance coverage:

Joint accounts and payable-on-death accounts; published 4-1-99

Risk-based capital:

Construction loans on presold residential properties, junior liens on 1- to 4-family residential properties, etc.; published 3-2-99

FEDERAL LABOR RELATIONS AUTHORITY

Negotiability proceedings; meetings; published 12-2-98

FEDERAL RESERVE SYSTEM

Availability of funds and collection of checks (Regulation CC):

Software changes related to mergers; time to implement; published 3-26-99

Risk-based capital:

Construction loans on presold residential properties, junior liens on 1- to 4-family residential properties, etc.; published 3-2-99

GENERAL SERVICES ADMINISTRATION

Federal travel:

Privately owned automobile mileage reimbursement; published 3-31-99

HEALTH AND HUMAN SERVICES DEPARTMENT

Food and Drug Administration

Animal drugs, feeds, and related products:

New drug applications—

Dinoprost tromethamine sterile solution; published 4-1-99

Sponsor names and drug labeler codes, etc.; technical amendments; published 4-1-99

Sulfadimethoxine tablets and boluses; technical amendment; published 4-1-99

Biological products:

Pediatric studies requirements; safety and effectiveness of drugs and biological products for children; published 12-2-98

LABOR DEPARTMENT

Federal Contract Compliance Programs Office

Affirmative action and nondiscrimination obligations of contractos:

Individuals with disabilities; special disabled veterans; published 4-1-99

PENSION BENEFIT GUARANTY CORPORATION

Single-employer plans:

Allocation of assets—

Interest assumptions for valuing benefits; published 3-15-99

TRANSPORTATION DEPARTMENT

Coast Guard

Drawbridge operations:

Florida; published 3-2-99

TREASURY DEPARTMENT

Comptroller of the Currency

Risk-based capital:

Construction loans on presold residential properties, junior liens on 1- to 4-family residential properties, etc.; published 3-2-99

TREASURY DEPARTMENT

Thrift Supervision Office

Consumer credit classified as loss, slow consumer credit, and slow loans; definitions removed; published 2-10-99

Risk-based capital:

Construction loans on presold residential properties, junior liens on 1- to 4-family residential properties, etc.; published 3-2-99

Savings associations:

Capital distributions; published 1-19-99

COMMENTS DUE NEXT WEEK

AGRICULTURE DEPARTMENT

Animal and Plant Health Inspection Service

Plant-related quarantine, domestic:

Karnal bunt disease—

Regulated areas reclassification; comments due by 4-8-99; published 3-9-99

AGRICULTURE DEPARTMENT

Federal Crop Insurance Corporation

Crop insurance regulations:

Onions; comments due by 4-5-99; published 2-18-99

AGRICULTURE DEPARTMENT

Food Safety and Inspection Service

Meat and poultry inspection:

Inspection services; fee increase; comments due by 4-5-99; published 3-4-99

COMMERCE DEPARTMENT

Economic Development Administration

Economic Development Reform Act of 1998; implementation; comments due by 4-5-99; published 2-3-99

COMMERCE DEPARTMENT

Export Administration Bureau

Export licensing:

Commerce control list—

Missile technology controls changes; comments due by 4-9-99; published 2-8-99

COMMERCE DEPARTMENT

International Trade Administration

North American Free Trade Agreement (NAFTA); binational panel reviews:

Circular welded non-alloy steel pipe and tube from—

Mexico; comments due by 4-5-99; published 1-6-99

COMMERCE DEPARTMENT

National Oceanic and Atmospheric Administration

Fishery conservation and management:

West Coast States and Western Pacific fisheries—

West Coast salmon; comments due by 4-5-99; published 3-4-99

COMMODITY FUTURES TRADING COMMISSION

Reporting requirements:

Large trader reports; reporting levels changes; comments due by 4-5-99; published 2-3-99

CORPORATION FOR NATIONAL AND COMMUNITY SERVICE

Privacy Act; implementation; comments due by 4-5-99; published 3-5-99

ENERGY DEPARTMENT

Federal Energy Regulatory Commission

Electric utilities (Federal Power Act):

Open access same-time information systems (OASIS) and standards of conduct; implementation

Uniform business practices; comments due by 4-5-99; published 2-3-99

ENVIRONMENTAL PROTECTION AGENCY

Air pollutants, hazardous; national emission standards:

Polymer and resin production facilities (Groups I and IV) and volatile organic compound (VOC) emissions from polymer manufacturing industry; comments due by 4-8-99; published 3-9-99

Polymer and resin √2√production facilities (Groups I and IV) and volatile organic compound (VOC) emissions from polymer manufacturing industry; comments due by 4-8-99; published 3-9-99

Air pollution control; new motor vehicles and engines:

New nonroad spark-ignition engines at or below 19 kilowatts; phase 2 emission standards; comments due by 4-5-99; published 2-3-99

Air quality implementation plans; approval and promulgation; various States:

Connecticut; comments due by 4-9-99; published 3-10-99
Air quality implementation plans; √A√approval and promulgation; various States; air quality planning purposes; designation of areas:
Colorado; comments due by 4-9-99; published 3-10-99
Connecticut; comments due by 4-9-99; published 3-10-99
Hazardous waste:
Identification and listing—
Exclusions; comments due by 4-5-99; published 2-19-99
Superfund program:
Toxic chemical release reporting; community-right-to-know—
Persistent bioaccumulative toxic (PBT) chemicals; reporting thresholds lowered, etc.; comments due by 4-7-99; published 3-1-99
Water programs:
Pollutants analysis test procedures; guidelines—
Mercury; measurement method; comments due by 4-5-99; published 3-5-99

FARM CREDIT ADMINISTRATION
Freedom of Information Act; implementation; comments due by 4-7-99; published 3-8-99

FEDERAL COMMUNICATIONS COMMISSION
Radio services, special:
Personal radio services—
Medical implant communications service in 402-405 MHz band; establishment; comments due by 4-9-99; published 3-3-99
Radio stations; table of assignments:
California; comments due by 4-5-99; published 2-23-99
Colorado; comments due by 4-5-99; published 2-23-99
Illinois; comments due by 4-5-99; published 2-23-99
Iowa; comments due by 4-5-99; published 2-23-99
Kansas; comments due by 4-5-99; published 2-23-99
Kentucky; comments due by 4-5-99; published 2-23-99
Montana; comments due by 4-5-99; published 2-23-99
Pennsylvania; comments due by 4-5-99; published 2-23-99
Texas; comments due by 4-5-99; published 2-23-99
West Virginia; comments due by 4-5-99; published 2-23-99
Wyoming; comments due by 4-5-99; published 2-23-99

FEDERAL ELECTION COMMISSION
Freedom of Information Act; implementation; comments due by 4-5-99; published 3-4-99

HEALTH AND HUMAN SERVICES DEPARTMENT
Children and Families Administration
Head Start Program:
Authorization of use of grant funds to finance construction and major renovation of facilities; comments due by 4-9-99; published 2-8-99

HEALTH AND HUMAN SERVICES DEPARTMENT
Food and Drug Administration
Food for human consumption:
Food labeling—
Dietary supplements; use of health claims based on authoritative statements; comments due by 4-6-99; published 1-21-99
Medical devices:
External penile rigidity devices; proposed classification; comments due by 4-5-99; published 1-4-99

INTERIOR DEPARTMENT
Land Management Bureau
Minerals management:
Oil and gas leasing—
Federal oil and gas resources; protection against drainage by operations on nearby lands resulting in lower royalties from Federal leases; correction; comments due by 4-5-99; published 1-13-99

INTERIOR DEPARTMENT
Surface Mining Reclamation and Enforcement Office
Permanent program and abandoned mine land reclamation plan submissions:
Indiana; comments due by 4-9-99; published 2-8-99

LEGAL SERVICES CORPORATION
Audit services:
Debarment, suspension, and removal of recipient auditors; comments due by 4-6-99; published 2-5-99

POSTAL SERVICE
Domestic Mail Manual:
Flat-size periodicals and standard mail; packaging material standards; comments due by 4-8-99; published 3-9-99

SECURITIES AND EXCHANGE COMMISSION
Securities:
Publication or submission of quotations without specified information; comments due by 4-7-99; published 3-8-99
Securities offerings, regulatory structure; modernization and clarification; comments due by 4-5-99; published 12-4-98
Takeovers and security holder communications; regulation modernization; comments due by 4-5-99; published 12-4-98

TRANSPORTATION DEPARTMENT
Disadvantaged business enterprise participation in DOT financial assistance programs; comments due by 4-5-99; published 2-2-99

TRANSPORTATION DEPARTMENT
Federal Aviation Administration
Airworthiness directives:
Allison Engine Co., Inc.; comments due by 4-5-99; published 2-4-99
Boeing; comments due by 4-5-99; published 2-4-99
McDonnell Douglas; comments due by 4-8-99; published 2-22-99
Raytheon; comments due by 4-8-99; published 2-5-99
Textron Lycoming; comments due by 4-5-99; published 2-3-99
Class E airspace; comments due by 4-9-99; published 3-10-99

TRANSPORTATION DEPARTMENT
National Highway Traffic Safety Administration
American Automobile Labeling Act; implementation:
Motor vehicle content labeling; domestic and foreign parts content information; comments due by 4-9-99; published 2-8-99
Motor vehicle safety standards:
Air brake systems—
Air brake standard rulemaking petition; partial grant/partial denial; comments due by 4-5-99; published 2-3-99

TREASURY DEPARTMENT
Fiscal Service
Financial management services:
Federal payments by electronic funds transfer; access to accounts at financial institutions through payment service providers; comments due by 4-8-99; published 1-8-99

TREASURY DEPARTMENT
Internal Revenue Service
Income taxes:
Education tax credits; Hope scholarship credit and lifetime learning credit; guidance; comments due by 4-6-99; published 1-6-99
Fast-pay stock; recharacterizing financing arrangements; comments due by 4-6-99; published 1-6-99

TREASURY DEPARTMENT
Thrift Supervision Office
Regulated activities:
Exempt savings and loan holding companies and grandfathered activities; comments due by 4-9-99; published 2-8-99

LIST OF PUBLIC LAWS

This is a continuing list of public bills from the current session of Congress which have become Federal laws. It may be used in conjunction with ''P L U S'' (Public Laws Update Service) on 202–523–6641. This list is also available online at http://www.nara.gov/fedreg.

The text of laws is not published in the **Federal Register** but may be ordered in ''slip law'' (individual pamphlet) form from the Superintendent of Documents, U.S. Government Printing Office, Washington, DC 20402 (phone, 202–512–1808). The text will also be made available on the Internet from GPO Access at http://www.access.gpo.gov/nara/index.html. Some laws may not yet be available.

H.R. 808/P.L. 106–5
To extend for 6 additional months the period for which

chapter 12 of title 11, United States Code, is reenacted. (Mar. 30, 1999; 113 Stat. 9)

Last List March 29, 1999

Public Laws Electronic Notification Service (PENS)

PENS is a free electronic mail notification service of newly enacted public laws. To subscribe, send E-mail to **listproc@lucky.fed.gov** with the text message:

subscribe PUBLAWS-L Your Name.

Note: This service is strictly for E-mail notification of new public laws. The text of laws is not available through this service. **PENS** cannot respond to specific inquiries sent to this address.

CFR ISSUANCES 1999
January 1999 Editions and Projected April, 1999 Editions

This list sets out the CFR issuances for the January 1999 editions and projects the publication plans for the **April, 1999** quarter. A projected schedule that will include the **July, 1999** quarter will appear in the first **Federal Register** issue of July.

For pricing information on available 1998–1999 volumes consult the CFR checklist which appears every Monday in the Federal Register.

Pricing information is not available on projected issuances. The weekly CFR checklist and the monthly List of CFR Sections Affected will continue to provide a cumulative list of CFR titles and parts, revision date and price of each volume.

Normally, CFR volumes are revised according to the following schedule:

Titles 1–16—January 1
Titles 17–27—April 1
Titles 28–41—July 1
Titles 42–50—October 1

All volumes listed below will adhere to these scheduled revision dates unless a notation in the listing indicates a different revision date for a particular volume.

Titles revised as of January 1, 1999:

Title

CFR Index
700–899
900–999
1–2 (Cover only)
1000–1199
1200–1599
3 (Compilation)
1600–1899
1900–1939
4 (Cover only)
1940–1949
1950–1999
2000–End

5 Parts:
1–699
700–1199
1200–End

6 [Reserved]

7 Parts:
1–26
27–52
53–209
210–299
300–399
400–699

8

9 Parts:
1–199
200–End

10 Parts:
1–50
51–199
200–499
500–End

11
60–139
140–199
12 Parts:
1–199
200–1199
1200–End
200–219
220–299
300–499
500–599
600–End

13

14 Parts:
1–59
60–139
140–199
200–1199
1200–End

15 Parts:
0–299
300–799
800–End

16 Parts:
0–999
1000–End

Projected April 1, 1999 editions:

Title

17 Parts:
1–199
200–239
240–End

18 Parts:
1–399
400–End

19 Parts:
1–140
141–199
200–End

20 Parts:
1–399
400–499
500–End (possible cover only)

21 Parts:
1–99
100–169
170–199
200–299
300–499
500–599
600–799
800–1299
1300–End

22 Parts:
1–299
300–End

23

24 Parts:
0–199
200–499
500–699
700–1699
1700–End

25

26 Parts:
1 (§§ 1.0-1–1.60)
1 (§§ 1.61–1.169)
1 (§§ 1.170–1.300)
1 (§§ 1.301–1.400)
1 (§§ 1.401–1.440)
1 (§§ 1.441–1.500)
1 (§§ 1.501–1.640) (possible cover only)
1 (§§ 1.641–1.850)
1 (§§ 1.851–1.907)
1 (§§ 1.908–1.1000)
1 (§§ 1.1001–1.1400)
1 (§ 1.1401–End)
2–29
30–39
40–49
50–299
300–499
500–599
600–End

27 Parts:
1–199
200–End

TABLE OF EFFECTIVE DATES AND TIME PERIODS—APRIL 1999

This table is used by the Office of the Federal Register to compute certain dates, such as effective dates and comment deadlines, which appear in agency documents. In computing these dates, the day after publication is counted as the first day.

When a date falls on a weekend or holiday, the next Federal business day is used. (See 1 CFR 18.17)

A new table will be published in the first issue of each month.

DATE OF FR PUBLICATION	15 DAYS AFTER PUBLICATION	30 DAYS AFTER PUBLICATION	45 DAYS AFTER PUBLICATION	60 DAYS AFTER PUBLICATION	90 DAYS AFTER PUBLICATION
April 1	April 16	May 3	May 17	June 1	June 30
April 2	April 19	May 3	May 17	June 1	July 1
April 5	April 20	May 5	May 20	June 4	July 6
April 6	April 21	May 6	May 21	June 7	July 6
April 7	April 22	May 7	May 24	June 7	July 6
April 8	April 23	May 10	May 24	June 7	July 7
April 9	April 26	May 10	May 24	June 8	July 8
April 12	April 27	May 12	May 27	June 11	July 12
April 13	April 28	May 13	May 28	June 14	July 12
April 14	April 29	May 14	June 1	June 14	July 13
April 15	April 30	May 17	June 1	June 14	July 14
April 16	May 3	May 17	June 1	June 15	July 15
April 19	May 4	May 19	June 3	June 18	July 19
April 20	May 5	May 20	June 4	June 21	July 19
April 21	May 6	May 21	June 7	June 21	July 20
April 22	May 7	May 24	June 7	June 21	July 21
April 23	May 10	May 24	June 7	June 22	July 22
April 26	May 11	May 26	June 10	June 25	July 26
April 27	May 12	May 27	June 11	June 28	July 26
April 28	May 13	May 28	June 14	June 28	July 27
April 29	May 14	June 1	June 14	June 28	July 28
April 30	May 17	June 1	June 14	June 29	July 29