A0608 TAPC

SYSTEM NAME:

Personal Affairs Files.

SYSTEM LOCATION:

Decentralized to major commands, installations, and activities. Official mailing addresses are published as an appendix to the Army's compilation of record systems notices.

CATEGORIES OF INDIVIDUALS COVERED BY THE SYSTEM:

Army officers, warrant officers, and enlisted personnel on active duty.

CATEGORIES OF RECORDS IN THE SYSTEM:

Third party inquiries pertaining to such matters as dependent assistance, indebtedness, non-support, paternity claims, and marriage in overseas areas.

AUTHORITY FOR MAINTENANCE OF THE SYSTEM:

10 U.S.C. 3013, Secretary of the Army and 5 U.S.C. 301, Departmental Regulations.

PURPOSE(S):

To review and answer inquiries concerning personal affairs of service members; e.g., dependent assistance, indebtedness, non-support, paternity claims, marriage in overseas areas, and similar matters that originate from third parties.

ROUTINE USES OF RECORDS MAINTAINED IN THE SYSTEM, INCLUDING CATEGORIES OF USERS AND THE PURPOSES OF SUCH USES:

In addition to those disclosures generally permitted under 5 U.S.C. 552a(b) of the Privacy Act, these records or information contained therein may specifically be disclosed outside the DoD as a routine use pursuant to 5 U.S.C. 552a(b)(3) as follows:

The 'Blanket Routine Uses' set forth at the beginning of the Army's compilation of systems of records notices also apply to this system.

POLICIES AND PRACTICES FOR STORING, RETRIEVING, ACCESSING, RETAINING, AND DISPOSING OF RECORDS IN THE SYSTEM:

STORAGE:

Paper records in file folders.

RETRIEVABIITY:

By service member's surname.

SAFEGUARDS:

Records are available only to designated persons having official need therefor in the performance of their duties. Records are kept in secure office areas.

RETENTION AND DISPOSAL:

Retained for 2 years.

SYSTEM MANAGER(S) AND ADDRESS:

Commander, U.S. Total Army Personnel Command, ATTN: TAPC-PDO-IP, 200 Stovall Street, Alexandria, VA 22332–0474.

NOTIFICATION PROCEDURE:

Individuals seeking to determine if information about themselves is contained in this record system should address written inquiries to the command/installation/activity where they believe inquiry was sent.

Individual should provide the full name, current address and telephone number, and sufficient details to permit locating the record.

RECORD ACCESS PROCEDURES:

Individuals seeking access to records about themselves contained in this record system should address written inquiries to the command/installation/activity where they believe inquiry was sent.

Individual should provide the full name, current address and telephone number, and sufficient details to permit locating the record.

CONTESTING RECORD PROCEDURES:

The Army's rules for accessing records, and for contesting contents and appealing initial agency determinations are contained in Army Regulation 340–21; 32 CFR part 505; or may be obtained from the system manager.

RECORD SOURCE CATEGORIES:

From third parties, official Army records.

EXEMPTIONS CLAIMED FOR THE SYSTEM:

None.

[FR Doc. 99–8507 Filed 4–6–99; 8:45 am]

BILLING CODE 5001–10–F

DEPARTMENT OF ENERGY

Record of Decision For the Advanced Mixed Waste Treatment Project at the Idaho National Engineering and Environmental Laboratory

AGENCY: U. S. Department of Energy (DOE)

ACTION: Record of decision.

SUMMARY: The Department has decided to implement the Preferred Alternative identified in the Advanced Mixed Waste Treatment Project Final Environmental Impact Statement (AMWTP FEIS) (DOE/EIS–0290), dated January 1999. The decision to proceed with the construction and operation of the Advanced Mixed Waste Treatment Project (AMWTP) facility allows the U.S. Department of Energy (DOE) to treat and prepare for shipment and disposal of 65,000 cubic meters of DOE transuranic (TRU) waste, alpha-contaminated low-level mixed waste (alpha LLMW), and low-level mixed wastes (LLMW) currently stored at Idaho National Engineering and Environmental Laboratory (INEEL). Further, DOE could treat at the AMWTP up to 120,000 cubic meters of additional waste from the INEEL or other DOE sites, for a total of 185,000 cubic meters. The AMWTP facility will treat waste to meet the Waste Isolation Pilot Plant (WIPP) Waste Acceptance Criteria (WAC) and applicable requirements of the Toxic Substances Control Act (TSCA) and the Resource Conservation and Recovery Act (RCRA) Land Disposal Restrictions (LDR).

In making its decision, DOE considered several factors including the environmental analyses reported in the AMWTP FEIS, estimated costs of the alternatives reported in Advanced Mixed Waste Treatment Project Environmental Impact Statement Alternatives Cost Study, regulatory implications of the alternatives, mission, national policy, and public comments on the AMWTP Draft EIS. This Record of Decision documents the Department's decision to implement the Preferred Alternative, which provides for the greatest long-term protection of the environment with small short-term environmental impacts and health risks.

FOR FURTHER INFORMATION CONTACT: For further information on the AMWTP, the contract with BNFL Inc., or the EIS, please write or call: John Medema, AMWTP EIS Document Manager, U.S. Department of Energy, Idaho Operations Office, 850 Energy Drive, MS–1117, Idaho Falls, ID 83401, Telephone: (208) 526–1407.

For general information on DOE's National Environmental Policy Act (NEPA) process, please contact: Carol M. Borgstrom, Director, Office of NEPA Policy and Assistance (EH–42), U.S. Department of Energy, 1000 Independence Avenue, S.W., Washington, D.C. 20585, Telephone: (202) 586–4600 or leave a message at (800) 472–2756.

SUPPLEMENTARY INFORMATION:

Background

Since the mid-1940s, DOE and its predecessor agencies have generated TRU waste during the course of nuclear weapons production, nuclear material processing, and research and development activities. DOE currently defines TRU waste as waste containing alpha-emitting radionuclides with an atomic number greater than 92 and half-

lives greater than 20 years, at concentrations greater than 100 nanocuries per gram of waste. Prior to 1982, DOE considered waste containing alpha-emitting radionuclides at concentrations greater than 10 nanocuries per gram of waste to be TRU waste. Waste at INEEL that has concentrations greater than 10 nanocuries per gram but less than 100 nanocuries per gram is considered to be alpha-contaminated low-level waste, which is being managed as TRU waste. DOE has stored TRU waste and alpha-contaminated low-level waste at the INEEL since the early 1970s. Most of this waste was generated at DOE's Rocky Flats Plant near Denver, Colorado. The waste was shipped to the INEEL in drums and boxes that were retrievably stored on an asphalt pad at INEEL's Radioactive Waste Management Complex (RWMC) and covered with tarps, plywood, and soil to form an earthen-covered berm.

Approximately 95 percent of this radioactive waste is classified as mixed waste because it contains chemically hazardous waste and, therefore, is regulated under RCRA. Some of the wastes also contain polychlorinated biphenyls (PCBs), which are regulated under TSCA. These wastes (radioactive, RCRA, and TSCA wastes) are mixed together within their storage containers. DOE needs to place these wastes in a configuration that will allow for their disposal at the WIPP near Carlsbad, New Mexico, or another appropriate facility, in a manner consistent with state and federal law and in compliance with the schedule contained in the Settlement Agreement/Consent Order.

On October 17, 1995, the State of Idaho, the Department of the Navy, and DOE settled the case of the *Public Service Co. of Colorado* v. *Batt*, CV 91–0035–S–EJL (D. Idaho) (Lead Case). Certain conditions of the Settlement Agreement/Consent Order obligated DOE to:

—Commence procurement of a treatment facility at the INEEL for the treatment of TRU waste, alpha LLMW, and LLMW, and

—Execute a procurement contract for a treatment facility by June 1, 1997, complete construction of the facility by December 31, 2002, and commence operation by March 31, 2003.

A procurement contract for treatment services was awarded to BNFL Inc. on December 20, 1996. Construction and operation of the treatment facility is contingent upon DOE's completion of an EIS and issuance of a record of decision. If DOE decides not to move forward with construction and operation of the facility, the contract will be terminated.

Also, DOE negotiated the INEEL Site Treatment Plan (STP) with the State of Idaho to meet the requirements of the Federal Facility Compliance Act (FFCA). The STP includes a schedule for constructing a treatment facility(ies) for TRU waste and alpha LLMW that is consistent with the milestones in the Settlement Agreement/Consent Order.

Alternatives Considered

DOE analyzed four alternatives in the EIS, including the No Action Alternative, the Preferred Alternative, the Non-Thermal Treatment Alternative, and the Treatment and Storage Alternative. Under all four alternatives, the Department would continue with preparations at existing INEEL facilities to ship 3,100 cubic meters of TRU waste out of Idaho under the Settlement Agreement/Consent Order. The alternatives are summarized below.

Preferred Alternative

The Preferred Alternative provides for construction and operation of the AMWTP facility in accordance with DOE's contract with BNFL Inc. The AMWTP facility will treat waste to WIPP WAC, TSCA, and RCRA LDR requirements and standards, as applicable. The waste treatment processes analyzed in the Preferred Alternative are supercompaction, macroencapsulation, incineration, and microencapsulation (see Figure 1). The facility will have sufficient operating capacity to treat approximately 6,500 cubic meters of waste per year. This would accommodate the treatment of 65,000 cubic meters of INEEL waste by 2015 as required by the Settlement Agreement/Consent Order, and up to 120,000 cubic meters of additional waste from the INEEL or other DOE sites by 2033. Treatment of 65,000 cubic meters of INEEL waste would result in approximately 30,000 cubic meters (containerized volume) of waste for offsite disposal. This alternative will allow DOE to satisfy negotiated agreements and commitments and meet regulatory requirements under RCRA and TSCA.

The Preferred Alternative is consistent with DOE's planning objectives and decisions as documented in the 1995 Record of Decision for the Department of Energy Programmatic Spent Nuclear Fuel Management and Idaho National Engineering Laboratory Environmental Restoration and Waste Management Programs (60 **Federal Register** 28680, June 1, 1995). Implementation of the Preferred Alternative is also consistent with the Record of Decision for the Treatment and Storage of Transuranic Waste Pursuant to the Waste Management Programmatic Environmental Impact Statement (63 **Federal Register** 3629, January 23, 1998). In that Record of Decision, the Department decided to ''develop and operate mobile and fixed facilities to characterize and prepare TRU waste for disposal at WIPP'' and that ''each of the DOE's sites that has, or will generate, TRU waste will, as needed, prepare and store its TRU waste on site . . . prior to disposal.''

BILLING CODE 6450–01–P

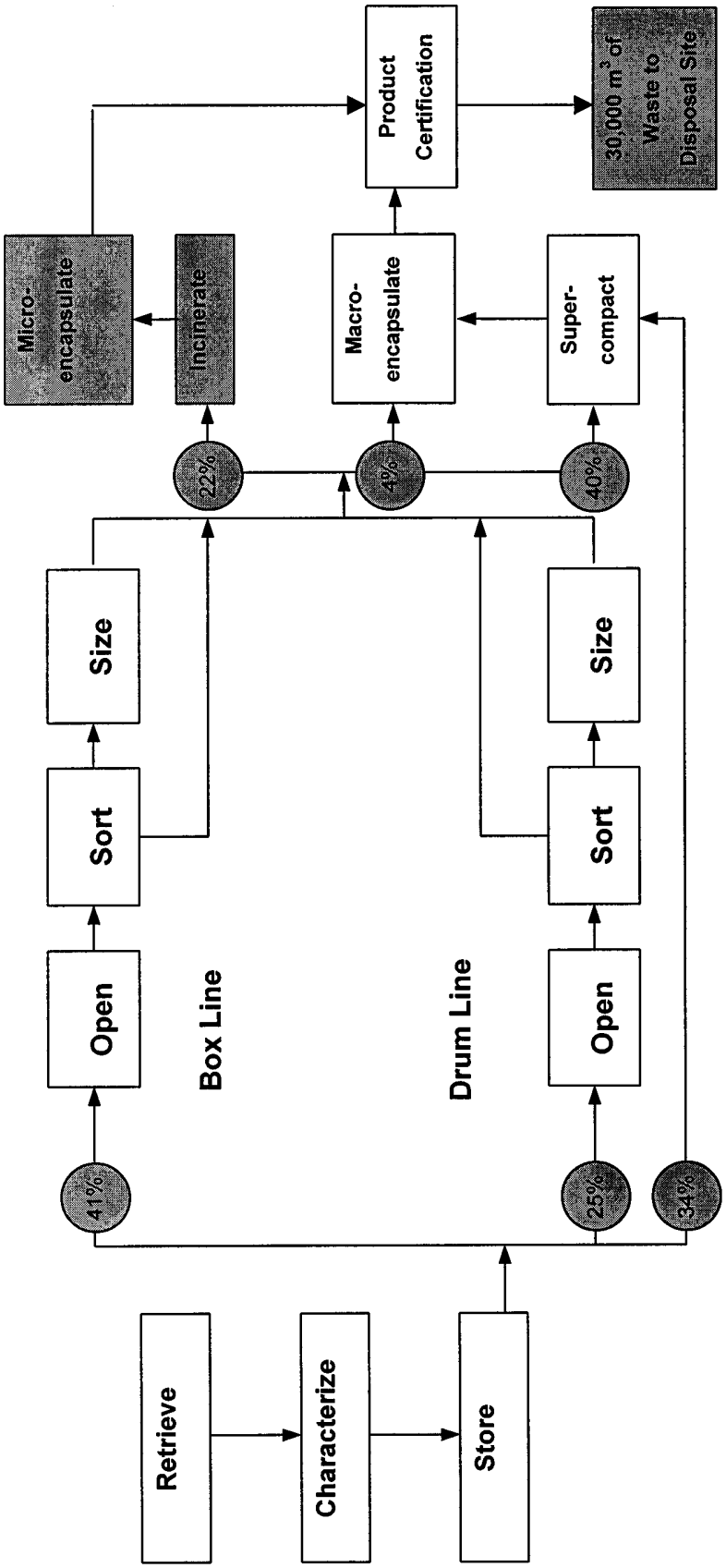

FIGURE 1. Preferred Alternative process flow-65,000[1] cubic meters of input volume.

[1]Process flow would be the same for treatment of up to 120,000 cubic meters of additional waste, if needed.

BILLING CODE 6450–01–C

No Action Alternative

Under this alternative, ongoing TRU waste, alpha LLMW, and LLMW management operations and projects would continue and existing facilities at the INEEL RWMC would remain in use. Waste would be retrieved from the earthen-covered berm, and placed in RCRA compliant storage facilities. These actions have been analyzed and would proceed as described in the Environmental Assessment for the Retrieval and Re-storage of Transuranic Storage Area Waste at the Idaho National Engineering Laboratory (DOE/EA–0692). Waste would be shipped to WIPP or another appropriate facility, but only as could be supported by existing INEEL facilities. Waste that could not meet the appropriate receiving facility WAC would remain in storage in the RCRA storage modules at the RWMC indefinitely.

The No Action Alternative was not selected because it would not provide appropriate long-term environmental protection (i.e., it would not destroy any of the hazardous organic components of the waste and would not permanently isolate all the wastes from the environment). The No Action Alternative would not comply with the Settlement Agreement/Consent Order, RCRA, TSCA, or with the INEEL STP, and is not consistent with long-range DOE planning and decisions DOE has made in previous Records of Decision. Specifically, in the 1995 Record of Decision Department of Energy Programmatic Spent Nuclear Fuel Management and Idaho National Engineering Laboratory Environmental Restoration and Waste Management Programs DOE decided: ''The INEL will construct treatment facilities necessary to comply with the Federal Facility Compliance Act. Treatment of transuranic waste at a minimum will be for the purpose of meeting waste acceptance criteria for disposal at Waste Isolation Pilot Plant and will occur on a schedule to be negotiated with the State of Idaho.'' Additionally, in the 1995 Record of Decision, the Department decided to make future decisions regarding planned waste treatment projects (i.e., Private Sector Alpha-Contaminated Mixed Low-Level Waste Treatment and Idaho Waste Processing Facility) at the INEEL pending further project definition, funding priorities, or appropriate review under NEPA. The AMWTP EIS tiers from the Department of Energy Programmatic Spent Nuclear Fuel Management and Idaho National Engineering Laboratory Environmental Restoration and Waste Management Programs Final Environmental Impact Statement (DOE/EIS–0203–F) and provides both site-specific environmental impact analysis and the required NEPA review.

Non-Thermal Treatment Alternative

Under this alternative, the AMWTP facility would be constructed without the capability to incinerate waste or microencapsulate incinerator ash. Only supercompaction and macroencapsulation would be used to treat wastes. Wastes requiring thermal treatment to meet disposal criteria (e.g., PCBs) would be repackaged and stored until a treatment option is developed or identified and evaluated under NEPA. The AMWTP facility construction schedule would be the same as for the Preferred Alternative. All waste that could be treated to meet WIPP WAC without incineration would be prepared for shipment to WIPP. Operation of the facility would continue until 2015, when DOE expects the need for it to end. Under this alternative, the 65,000 cubic meters of INEEL waste would be non-thermally treated. Approximately 23,000 to 29,000 cubic meters of waste would be shipped from the INEEL for disposal and approximately 8,000 to 14,000 cubic meters of containerized waste would remain in storage indefinitely at the RWMC.

DOE considers this alternative to be less desirable than the Preferred Alternative because it would not result in destruction of any of the hazardous organic components of the waste or the PCBs, and some waste would be stored indefinitely at INEEL. The Non-Thermal Treatment Alternative would not allow full compliance with the Settlement Agreement/Consent Order, RCRA, or with the INEEL STP. This alternative would not be consistent with DOE long-range plans or with decisions made in the 1995 Record of Decision regarding the construction at INEEL of treatment facilities necessary to comply with the FFCA STP.

Treatment and Storage Alternative

Under this alternative, the AMWTP construction and operation, including the treatment processes implemented, would be the same as for the Preferred Alternative. The difference is that the treated waste (approximately 30,000 cubic meters) would be stored at the RWMC rather than shipped offsite for disposal. This alternative was evaluated as a contingency to analyze the long-term environmental impacts of storing the treated waste at the RWMC in the event that WIPP or another appropriate offsite facility is unable to receive or dispose of INEEL treated waste. Waste from other DOE sites could still come to the AMWTP for treatment. In accordance with the INEEL STP, such offsite wastes would be accepted at the AMWTP facility for treatment and treated waste would be returned to the generator.

The Treatment and Storage Alternative is less desirable than the Preferred Alternative because (1) it would not comply with the Settlement Agreement/Consent Order (i.e., waste would not be shipped out of Idaho) and (2) it is not consistent with DOE's long-range plans to dispose of this waste.

Environmentally Preferable Alternative

In identifying the Environmentally Preferable Alternative, DOE considered both near-term and long-term human health and environmental impacts. Certain alternatives would result in smaller near-term potential impacts but continued potential for long-term impacts, while other alternatives would result in larger near-term potential impacts but smaller long-term potential impacts.

The AMWTP EIS analyzed a number of potential environmental impacts, including those to human health, air and water, ecological resources, environmental justice, land use, and site infrastructure under each of the alternatives. The analysis showed little difference in potential impacts among the alternatives analyzed. Nonetheless, all potential impacts identified were considered in DOE's decision, and in the identification of the Environmentally Preferable Alternative.

For the projected 30-year period of AMWTP facility operations analyzed in the EIS, the short-term potential environmental impacts of the action alternatives would be slightly greater than the No Action Alternative. In the long-term, the potential impacts to health and the environment would be the greatest under the No Action Alternative. Over the long-term wastes could be released to the environment if the storage containers degrade. Additionally, it is reasonable to expect that some treatment or preparation for disposal will still be needed at some time in the future, and the risks associated with long-term storage and the loss of institutional control remain.

The Preferred Alternative and the Treatment and Storage Alternative would result in the largest (although small) potential near-term impacts to air quality, public health and worker risk. Both the Preferred Alternative and the Treatment and Storage Alternative would render all the waste suitable for disposal at WIPP or another appropriate facility. The Preferred Alternative

would result in the least potential long-term impacts to the local environment because the treated waste would leave the INEEL.

The Non-Thermal Treatment Alternative would result in smaller near-term potential impacts to air quality than the Preferred Alternative and the Treatment and Storage Alternative, but more than the No Action Alternative. Under the Non-Thermal Treatment Alternative, there would be less potential health risk over the short term, but a portion of the RCRA waste (i.e., hazardous organic wastes) and all of the PCB waste would remain in storage at the INEEL indefinitely. The long-term potential impacts of indefinite storage under the Non-Thermal Treatment Alternative are smaller than the No Action Alternative but larger than the Preferred Alternative. If the wastes were not isolated from the environment in a disposal facility, they could enter the environment and impact public health and the environment via the air or groundwater pathways.

In conclusion, the potential short-term environmental impacts from any of the action alternatives are small. The Preferred Alternative results in the least long-term potential impacts and is the only alternative that meets all regulatory and legal commitments. In addition, the Preferred Alternative is also consistent with DOE's long-range plans to dispose of this waste. DOE therefore believes that the Preferred Alternative is the Environmentally Preferable Alternative.

Mitigation

DOE is committed to operating the INEEL in compliance with all applicable laws, regulations, executive orders, departmental orders, permits and compliance agreements. Volume 1, Section 5.19 of the AMWTP EIS presents an overview of the mitigation measures that will be taken to minimize the risks associated with the construction and operation of the proposed AMWTP facility (e.g., watering of soil for dust control, strong ''Stop Work'' stipulations in the event that cultural resources or human remains are discovered, and runoff control). DOE considers these to be routine mitigation measures that do not require a mitigation action plan to be prepared (see 10 CFR 1021.331(a)).

Decision

DOE selects the Preferred Alternative of the AMWTP EIS (construct and operate an AMWTP facility at the INEEL in accordance with DOE's contract with BNFL Inc). DOE will treat 65,000 cubic meters of INEEL waste for offsite disposal and could treat up to 120,000 cubic meters of additional waste from the INEEL or other DOE sites.

DOE anticipates that construction of the AMWTP facility will begin during the 1999 construction season. Under the Settlement Agreement/Consent Order, construction of the AMWTP facility will be completed by December 31, 2002, and operation of the facility will begin by March 31, 2003.

The AMWTP treatment contract requires 65 percent volume reduction and compliance with RCRA LDR standards, TSCA requirements, and the WIPP WAC, as applicable. The facility and equipment will be capable of processing up to 85,000 cubic meters of waste in the first 13 years of operation. The Preferred Alternative as analyzed in the EIS includes the treatment processes of supercompaction, macroencapsulation, incineration, and microencapsulation. The potential exists that not all of these treatment processes will be used because future changes in disposal requirements might necessitate changes in treatment processes, with resulting modifications to contract specifications. Other changes or substitutions to the proposed processes may occur, provided the performance requirements specified in the contract are met. For example, although vitrification originally was analyzed in the EIS for the treatment of incinerator ash, it is no longer being considered as a treatment process. Any proposed substitution or major change in a treatment process would be evaluated where appropriate under NEPA.

DOE made this decision after considering the following factors associated with the Preferred Alternative:

- public comments on the EIS;
- a small potential for short-term environmental impacts;
- a waste form that will be ready for disposal at WIPP or another appropriate disposal facility;
- if WIPP or another appropriate disposal facility is unable to receive and dispose of INEEL waste, the treated waste will be in a form that would minimize potential impacts to the public and the environment during storage;
- consistency with DOE policy and previous decisions;
- compliance with negotiated agreements and commitments (e.g. Settlement Agreement/Consent Order) and regulatory requirements under RCRA and TSCA;
- smallest long-term potential impacts from continued management of this waste;
- cost effectiveness as shown in the AMWTP EIS Alternatives Cost Study; and
- use of commercially available, proven technologies.

After consideration of all relevant information and data, DOE has decided to implement the Preferred Alternative.

Issued in Washington, D.C. this 22nd day of March 1999.

James M. Owendoff,

Acting Assistant Secretary for Environmental Management.

[FR Doc. 99–8606 Filed 4–6–99; 8:45 am]

BILLING CODE 6450–01–P

DEPARTMENT OF ENERGY

Federal Energy Regulatory Commission

[Docket No. EC99–57–000]

AES Eastern Energy, L.P., AEE 2, L.L.C.; Notice of Filing

April 1, 1999.

Take notice that on March 26, 1999, AES Eastern Energy, L.P. and AEE 2, L.L.C. tendered for filing an application under Section 203 of the Federal Power Act for authorization to further transfer certain jurisdictional facilities associated with the sale of two of six coal-fired plants located in New York State and currently owned by NGE Generation, Inc. The two plants will be transferred to a wholly-owned subsidiary of AES Eastern Energy, L.P., AEE 2, L.L.C., rather than held by it directly, as previously authorized by the Commission.

Any person desiring to be heard or to protest such filing should file a motion to intervene or protest with the Federal Energy Regulatory Commission, 888 First Street, N.E., Washington, D.C. 20426, in accordance with Rules 211 and 214 of the Commission's Rules of Practice and Procedure (18 CFR 385.211 and 385.214). All such motions and protests should be filed on or before April 8, 1999. Protests will be considered by the Commission to determine the appropriate action to be taken, but will not serve to make protestants parties to the proceedings. Any person wishing to become a party must file a motion to intervene. Copies of this filing are on file with the Commission and are available for public inspection. This filing may also be viewed on the Internet at http://